**UNITED STATES**
**NUCLEAR REGULATORY COMMISSION**
**ADVISORY COMMITTEE ON REACTOR SAFEGUARDS**
**WASHINGTON, DC 20555 - 0001**

June 15, 2012

MEMORANDUM TO: ACRS Members

FROM: Girija Shukla, Senior Staff Engineer ***/RA/***
Technical Safety Branch, ACRS

SUBJECT: CERTIFICATION OF THE MINUTES OF THE ACRS SUBCOMMITTEE ON THE UNITED STATES – ADVANCED PRESSURIZED WATER REACTOR, MARCH 22-23, 2012

The minutes for the subject meeting were certified on June 6, 2012. Along with the transcripts and presentation materials, this is the official record of the proceedings of that meeting. A copy of the certified minutes is attached.

Attachment: As stated

cc w/o Attachment: E. Hackett
C. Santos

cc w/ Attachment: ACRS Members

**UNITED STATES**
**NUCLEAR REGULATORY COMMISSION**
**ADVISORY COMMITTEE ON REACTOR SAFEGUARDS**
**WASHINGTON, DC 20555 - 0001**

June 15, 2012

MEMORANDUM TO: Girija Shukla, Senior Staff Engineer
Technical Safety Branch, ACRS

FROM: John Stetkar, Chairman
United Stated – Advanced Pressurized Water Reactor

SUBJECT: MINUTES OF THE MEETING OF THE ACRS SUBCOMMITTEE ON THE UNITED STATES – ADVANCED PRESSURIZED WATER REACTOR ON MARCH 22-23, 2012, IN ROCKVILLE, MD

I hereby certify, to the best of my knowledge and belief, that the minutes of the subject meeting are an accurate record of the proceedings for that meeting.

**/RA/** **06/6/2012**
J. Stetkar Date
Chairman
ACRS Subcommittee on the
United States – Advanced Pressurized Water Reactor

Certified on: June 06, 2012
Certified by: John Stetkar

Issued on: June 15, 2012

# ADVISORY COMMITTEE ON REACTOR SAFEGUARDS
# MINUTES OF THE ACRS US-APWR SUBCOMMITTEE MEETING
# MARCH 22-23, 2012

The ACRS United States – Advanced Pressurized Water Reactor (US-APWR) Subcommittee held a meeting on March 22-23, 2012 in Room T-2B1, 11545 Rockville Pike, Rockville, Maryland. On March 22, 2012, the meeting convened at 8:30 a.m. and adjourned at 4:56 p.m. On March 23, 2012, the meeting convened at 8:30 a.m. and adjourned at 10:31 a.m.

The entire meeting was open to the public.

No written comments or requests for time to make oral statements were received from members of the public related to this meeting.

## ATTENDEES

ACRS Members/ Staff:

John Stetkar, Member
Said Abdel-Khalik, Member
Dennis Bley, Member
Charles Brown, Member
William Shack, Member
Ilka T. Berrios, Staff
Girija Shukla, Staff

NRC Staff:

Hossein Hamzehee, NRO
David Terao, NRO
Eileen McKenna, NRO
Larry Wheeler, NRO
Paul Kallan, NRO
Angelo Stubbs, NRO
Gordon Curran, NRO
Christopher Van Wert, NRO
David A. Nold, NRO
Raul Hernandez, NRO
William Ward, NRO
Ngola Otto, NRO
Eugene O. Eagle Jr., NRO
Robert Fitzpatrick, NRO
Ann Hodgdon, OGC

Other Attendees:

Ryan Sprengel, MNES
Hiroshi Hamamoto, MNES
James Curry, MNES
Jason Richard, MNES
Kevin Lynn, MNES
Masashi Ito, MNES
Masatoshi Nagai, MNES
C. Keith Pulson, MNES
Shinji Kawanago, MNES
Joseph Tapia, MNES
Shinji Kinchi, MNES
Ron Reynolds, MNES
Hideki Tanaka, MNES
Jim Rogers, MNES
Hiroki Nishic, MHI
Motohisa Kitamori, MHI

Marc Hotchkiss, MHI
Naoki Kawata, MHI
Yoshiyaki Tanigawa, MHI
Junya Hattori, MHI
Ketta Otan, MHI
Tom Fitzpatrick, Holtec
Chuck Bullard, Holtec
Todd Evans, Luminant

SUMMARY

The purpose of the meeting was to review Chapter 9, "Auxiliary Systems" of the Safety Evaluation Report (SER) with Open Items associated with the US-APWR design certification application. The meeting transcripts are attached and contain an accurate description of each matter discussed during the meeting. The presentation slides and handouts used during the meeting are attached to these transcripts.

The following table lists the significant issues that were discussed during the meeting with the corresponding pages in the transcript.

| SIGNIFICANT ISSUES | |
|---|---|
| Issue | Reference Pages in Transcript |
| MHI provided a summary of the new and spent fuel storage facilities. | 13-16 |
| Members Shack and Brown, and Chairman Stetkar raised questions regarding the use of unanodized Metamic as a neutron absorber material in the spent fuel pool water with 4,000 ppm boric acid concentration. | 16-20 |
| Based on the US-APWR DCD Figure 9.1.4-2, Chairman Stetkar raised a concern regarding the failures that may occur while the weir gates are removed that could conceivably drain the spent fuel pool level down to the height of that weir wall. He asked for any information about the time until boiling would occur if it was drained to that level, and the time until fuel uncovery would start if drained to that level? | 21-26 |
| Based on the US-APWR DCD Figure 9.1.4-2, Chairman Stetkar asked if there are any drain lines from the transfer canal, cask pit and fuel inspection pit. If there are drain lines, how big they are? | 27-28 |
| MHI provided a summary of the spent fuel pit (SFP) cooling and purification system. | 30-33 |
| Chairman Stetkar raised the following question: If you're aligned in a refueling water storage pit cleanup mode so that you have one or both of the demineralizers aligned to the refueling water storage pit, and there is a break in the nonseismically-qualified section of the system, how do you isolate that break and prevent the refueling water storage pit from draining down into the fuel building? | 33-36 |
| Member Brown raised questions regarding the fuel pool instrumentation such as the level and temperature sensors. | 36-40 |

| | |
|---|---|
| MHI provided a summary of the light and heavy load handling systems. | 43-48 |
| Chairman Stetkar raised a question regarding the configuration of the spent fuel cask crane. | 47-48 |
| Member Bley raised a concern regarding the boron level in the spent fuel pit that's required to prevent criticality. MHI replied that soluble boron is needed only to prevent criticality for a misplaced fuel assembly outside the storage racks. Subcriticality is maintained under normal conditions, even if the pool is filled with pure water. | 48-52 |
| MHI provided a summary of the essential service water system. | 53-56 |
| MHI provided a summary of the component cooling water system. | 56-73 |
| Chairman Stetkar raised questions regarding the valves that connect the two trains in the component cooling water system. In Revision 3, the valves received automatic isolation signals, now they are manual. How does the operator determine train separation is required and what conditions require the operators to close those valves? Any guidance? | 57-61, 205-219 |
| Chairman Stetkar raised a concern regarding the possible overheating of reactor coolant pump motors after the loss of the component cooling water system. He also raised a concern regarding the vibration problems on the reactor coolant pumps after heating up the bearing oil system | 63-71 |
| MHI provided a summary of the potable and sanitary water system. | 73-74 |
| MHI provided a summary of the ultimate heat sink (UHS). | 74-77 |
| MHI provided a summary of the condensate storage facilities. | 77-80 |
| Chairman Stetkar raised a concern regarding the radioactive water leakages from the primary makeup water tank piping. MHI stated that the pipe between the primary water tank building and the auxiliary building is double-walled, with drainage to a radioactive waste sump. | 78-80 |
| MHI provided a summary of the chilled water system. | 80-93 |
| Chairman Stetkar and member Abdel-Khalik raised questions regarding the heat load of the emergency feedwater pumps and the heatup calculations for the turbine-driven pump rooms. | 82-92 |
| MHI provided a summary of the non-essential chilled water system. | 93-95 |
| Chairman Stetkar asked for clarification regarding the connection between the non-essential chilled water system and the component cooling water system. | 95-104 |

| | |
|---|---|
| MHI provided a summary of the turbine component cooling water system. | 105-106 |
| MHI clarified a committee's question regarding the unanodized Metamic, the borated water and the potential pH associated with it. | 109-112 |
| MHI provided a summary of the process auxiliaries. | 112-114 |
| MHI provided a summary of the sampling systems. | 114-115 |
| Chairman Stetkar asked for more information regarding two normally closed manual valves that are located at the outlet of the ESF room floor drains. | 115-122 |
| MHI provided a summary of the chemical and volume control system. | 122-123 |
| MHI provided a summary of the ventilation systems. | 123-143 |
| Chairman Stetkar asked if there are any safety-related components in the turbine building. | 133 |
| Chairman Stetkar asked for more information regarding the function and the classification of the containment fan coolers. | 137-143 |
| MHI provided a summary of the fire protection program. | 143-158 |
| Chairman Stetkar asked for additional information regarding the fire protection program: the configuration of the four safety divisions as they flow to the control room, and the barriers or separations that may have. MHI stated that the walls between the four electrical division cable rooms extend the full height to the Main Control Room floor. The divisional cables are distributed to the control panels in the sub-floor area below the Main Control Room raised floor. | 147-153 |
| MHI provided a summary of other auxiliary systems such as communications systems, lighting systems, gas turbine generator (GTG) systems (fuel oil storage and transfer, starting system, lubrication system ) | 159-167 |
| Member Brown raised a concern regarding the communication system being compromised. | 159-163 |
| Member Brown asked additional questions regarding the water level and the temperature gauges in the spent fuel (differences between the original design and the changes made as a result of an RAI). | 168-177 |
| NRC staff's presentation | 178-250 |
| Chairman Stetkar identified an inconsistency between the SER and the DCD Section 9.1.3 regarding spent fuel pit cooling capabilities and temperatures under degraded cooling conditions. | 180-186 |
| Chairman Stetkar raised a concern about the time and capability to clean up the spent fuel pit and the RWSP (SER Section 9.1.3.4). | 192-194 |

| | |
|---|---|
| Chairman Stetkar raised a concern regarding the basis for a statement in the SER Section 9.1.4.4 (the staff determined that any cavity leakage will be less than the available makeup capability). | 194-195 |
| Chairman Stetkar raised a question regarding the heavy load handling system; if there are any structures, systems, and components (SSCs) important to safety that could be damaged by drops from the Turbine Buildng crane? | 196-199 |
| Chairman Stetkar raised a concern regarding the difference of the required capacity of the UHS. A UHS should be sufficient for 30 days of cooling without makeup, but a minimum of 36 days is required for a cooling pond. | 219-223 |
| Member Bley asked how the new orders that were issued as a result of Fukushima will apply to the new plants. | 225-226 |
| The staff discussed the locations of the tanks such as the condensate and demineralized water storage tanks to avoid any flooding if there is a failure. This will probably be a COL item. | 230-238 |
| Chairman Stetkar raised a concern regarding why the essential chilled water system does not need technical specifications. | 239-242 |
| The staff discussed the Main Control Room ventilation systems. | 243-246 |
| Chairman Stetkar raised a concern regarding whether the 60 minutes is an appropriate time for startup of the alternate AC source based on heatup of the Main Control Room environment. The staff indicated that a steady-state temperature of approximately 121 °F is reached long after 60 minutes. There is substantial margin to that temperature at 60 minutes. | 246-247 |
| The staff discussed potential effects on Main Control Room instrumentation and controls on a worse case essential chilled water system leak within a Main Control Room HVAC system air handling unit | 248-250 |
| MHI provided responses to Chairman Stetkar's comment about the weir wall and drainage of spent fuel pit level to the weir wall height that is shown in DCD Figure 9.1.4-2. MHI did not have the information about heatup and boiloff times with level at the weir wall height. | 259-267 |
| MHI provided a partial response to Chairman Stetkar's concerns about potential draining of the spent fuel pit. There are no drain lines from the fuel transfer tube or the bottoms of the refueling canal, cask loading pit, and fuel inspection pit. | 268-272 |
| MHI provided a partial response to Chairman Stetkar's comment about alignment of the spent fuel pit demineralizers for RWSP cleanup. | 289-292 |
| MHI provided response to Chairman Stetkar's question in 9.1.4 about seismic restraints on the cask crane. The crane has seismic restraints. | 292-293 |
| MHI provided response to Chairman Stetkar's question in 9.2.2, with regard to the 10 minutes for restoring cooling to the RCP pumps. The time is based on the pump manufacturer's recommendations for bearing cooling. | 293-295 |
| MHI provided response to Chairman Stetkar's question also in 9.2.2 about component cooling water. | 296 |
| MHI provided response to Chairman Stetkar's question in 9.2.6 about the dike around the demineralized water storage tank. The tank does not have a dike. | 296 |

| | |
|---|---|
| MHI provided response to Chairman Stetkar's question in 9.2.7, about why the motor-driven EFW pump heat load was higher than the turbine-driven pump heat load. | 297 |
| MHI provided response to Chairman Stetkar's question about turbine-driven EFW pump and whether steam leakage was considered. Steam leakage was not considered in the room heatup calculation. | 298 |
| MHI provided response to Chairman Stetkar's question in 9.2.7 about double-lock closed isolation valves on the line from the CCW to the fan coolers. | 299 |
| MHI provided response to Chairman Stetkar's question in 9.3.3 about the normally closed floor drains in the ESF rooms. | 299-301 |
| MHI provided response to Chairman Stetkar's question in 9.5.1 about the separation of all four cable trains below the control room. | 301-304 |
| Member Shack presented his conclusions regarding acceptable performance of unanodized Metamic in a highly borated water environment. | 306-308 |
| The staff provided response to Chairman Stetkar's question in 9.2.5 with regards to the 30-day and 36-day ultimate heat sink inventory requirements. | 308-313 |
| The staff discussed the crossties between the CCWS loops in 9.2.2. The staff will ask MHI about potentially optimistic analysis assumptions regarding the timing of offsite power failure and a single active failure during LOCA heat load conditions. | 314-317 |
| The staff discussed about the 24-hour duration for operator action. | 317-318 |
| The staff provided response to Chairman Stetkar's question in 9.1.3.1 with regards to the inconsistency in the SFP temperature with regards to the DCD and the SER. | 319-321 |
| The staff provided response to Chairman Stetkar's comment on Section 9.1.4 about drain down of the refueling cavity. | 323-327 |
| The staff provided response to Chairman Stetkar's question about the chilled water system and why it is not in the tech specs. | 327-335 |
| The staff discussed about a set of equipment, structures that are important to safety, and that safety-related is a subset of that larger set. | 335-339 |

DOCUMENTS PROVIDED TO THE SUBCOMMITTEE

The following documents were provided to the members prior to the meeting:

- Memorandum to Edwin M. Hackett, U.S. Nuclear Regulatory Commission, United States - Advanced Pressurized Water Reactor Design Certification Application - Safety Evaluation with Open Items for Chapter 9, "Auxiliary Systems," 02/22/2012 (ML120390205)

- MUAP-DC009, Revision 3, Design Control Document for the US-APWR, Chapter 9, "Auxiliary Systems," Mitsubishi Heavy Industries, 03/31/2011 (ML110980217)

- MUAP-07032-NP, Revision 1, “Criticality Analysis for US-APWR New and Spent Fuel Storage Racks,” Mitsubishi Heavy Industries, December 2009 (ML093510508)

- MUAP-07033-NP, Revision 0, “Mechanical Analysis for US-APWR New and Spent Fuel Racks,” Mitsubishi Heavy Industries, March 2009 (ML090970187)

- MUAP-09014-NP, Revision 0, “Thermal-Hydraulic Analysis for US-APWR Spent Fuel Racks,” Mitsubishi Heavy Industries, June 2009 (ML091620275)

- MUAP-10020-NP, Revision 1, “US-APWR Safety-Related Air Conditioning, Heating, Cooling, and Ventilation Systems Calculations,” Mitsubishi Heavy Industries, March 2011 (ML111010226)

- “Markup for US-APWR DCD Revision 4 Section 9.2,” Mitsubishi Heavy Industries, 10/14/2011 (ML112940586)

# Official Transcript of Proceedings

# NUCLEAR REGULATORY COMMISSION

Title: Advisory Committee on Reactor Safeguards
US-APWR Subcommittee

Docket Number: (n/a)

Location: Rockville, Maryland

Date: March 22-23 2012

Work Order No.: NRC-1512 Pages 1-340

**NEAL R. GROSS AND CO., INC.**
**Court Reporters and Transcribers**
**1323 Rhode Island Avenue, N.W.**
**Washington, D.C. 20005**
**(202) 234-4433**

1 UNITED STATES OF AMERICA

2 NUCLEAR REGULATORY COMMISSION

3 + + + + +

4 ADVISORY COMMITTEE ON REACTOR SAFEGUARDS

5 (ACRS)

6 + + + + +

7 US-APWR SUBCOMMITTEE

8 + + + + +

9 THURSDAY

10 MARCH 22, 2012

11 + + + + +

12 ROCKVILLE, MARYLAND

13 + + + + +

14 The Subcommittee met at the Nuclear

15 Regulatory Commission, Two White Flint North, Room

16 T2B1, 11545 Rockville Pike, at 8:30 a.m., John

17 Stetkar, Chairman, presiding.

18 SUBCOMMITTEE MEMBERS PRESENT:

19 JOHN W. STETKAR

20 SAID ABDEL-KHALIK

21 DENNIS C. BLEY

22 CHARLES H. BROWN, JR.

23 WILLIAM J. SHACK

24

25

1 NRC STAFF PRESENT:
2 ILKA BERRIOS, Designated Federal Official
3 HOSSEIN HAMZEHEE
4 PAUL KALLAN
5 LARRY WHEELER
6 RAUL HERNANDEZ
7 GORDON CURRAN
8 EILEEN McKENNA
9 ANGELO STUBBS
10 DAVID NOLD
11
12 ALSO PRESENT:
13 RYAN SPRENGEL
14 JAMES CURRY
15 YOSHIYUKI TANIGAWA
16 BRET BRICKNER
17 CHARLES BULLARD
18 NAOKI KAWATA
19 SHINJI KAWANAGO
20 HIROKI NISHIO
21 MOTOHISA KITAMORI
22 JUNYA HATTORI
23 KEVIN LYNN
24 MARC HOTCHKISS
25 HIROSHI HAMAMOTO

1 RONALD REYNOLDS
2 HIDEKI TANAKA
3 MASASHI ITO
4
5
6
7
8
9
10
11
12
13
14
15
16
17
18
19
20
21
22
23
24
25

1 T-A-B-L-E O-F C-O-N-T-E-N-T-S

2 Opening Remarks and Objectives,
3 John Stetkar, ACRS .....5
4 Staff Introduction .....
5 Discussion of the US-APWR DCD Chapter 9 "Auxiliary
6 Systems" .....7
7 Continuation of the discussion of the US-APWR DCD
8 Chapter 9 .....51
9 Staff - Continuation of the discussion of th US-APWR
10 DCD Chapter 9 .....178

11
12
13
14
15
16
17
18
19
20
21
22
23
24
25

1 P-R-O-C-E-E-D-I-N-G-S

2 8:32 a.m.

3 CHAIR STETKAR: The meeting will now come
4 to order. This is a meeting of United States Advanced
5 Pressurized Water Reactor Subcommittee. I'm John
6 Stetkar, Chairman of the Subcommittee meeting.
7 ACRS members in attendance are Dennis Bley, Said
8 Abdel-Khalik, Bill Shack, and Charles Brown.
9 Ilka Berrios of the ACRS staff is the
10 designated federal official.
11 The Subcommittee will review Chapter 9,
12 Auxiliary Systems of the Safety Evaluation Report with
13 Open Items associated with the US-APWR design
14 certification application. We'll hear presentations
15 from Mitsubishi Heavy Industries and the NRC staff.
16 We have received no written comments or request for
17 time to make oral statements from members of the
18 public regarding today's meeting.
19 The Subcommittee will gather information,
20 analyze relevant issues and facts and formulate
21 proposed positions and actions as appropriate for
22 deliberation by the full Committee.
23 The rules for participation in today's
24 meeting have been announced as part of the notice of
25 this meeting previously published in the Federal

1 Register. Parts of this meeting may need to be closed
2 to the public to protect information proprietary to
3 Mitsubishi Heavy Industries or other parties.
4 I'm asking the NRC staff and the
5 Applicant to identify the need for closing the meeting
6 before we enter into such discussions, and to verify
7 that only people with a required clearance and need to
8 know are present.
9 A transcript of the meeting is being kept
10 and will be made available as stated in the Federal
11 Register notice. Therefore, we request that
12 participants in this meeting use the microphones
13 located throughout the meeting room when addressing
14 the Subcommittee. The participants should first
15 identify themselves and speak with sufficient clarity
16 and volume so that they may be readily heard.
17 First, regarding -- before we start, we
18 scheduled this meeting for two days because there's a
19 lot of material to cover. I wanted to make sure that
20 you had enough opportunity for discussions and
21 questions and understanding. I don't think we'll
22 finish today. I don't think that we will require all
23 day tomorrow.
24 I want to emphasize I don't want to keep
25 -- make sure there's enough time so don't rush to try

1 to finish today. If you need tomorrow morning, that's
2 fine.
3 I doubt that we'll run all day tomorrow
4 if we're kind of thinking of things so it's a little
5 bit difficult to schedule the timing with this volume
6 of material because you really don't know how much
7 discussion will be necessary. I didn't want to
8 artificially compress that discussion just by
9 scheduling it for one day. Keep that in mind and I
10 think everything will go okay.
11 We'll now proceed with the meeting. I
12 call upon Hossein Hamzehee.
13 MR. HAMZEHEE: Thank you, sir. Thank you
14 again. I think, as you said, we are ready for two
15 days, although our preference is to finish everything
16 today but the staff at MHI are available in case there
17 is a need for the second day.
18 With that I am going to turn it to Paul.
19 He's the Chapter PM.
20 MR. KALLAN: Hi. Good morning. My name
21 is Paul Kallan. I'm the Senior Project Manager and
22 also the Chapter PM for the US-APWR Chapter 9. I
23 would like to thank the Subcommittee for having us
24 here today. I would like to also thank MHI MNES for
25 being here and also for making their presentations.

1 I would also like to thank staff for being here today.
2 This is the US-APWR DCD certification
3 which was submitted to Mitsubishi Heavy Industries on
4 December 31, 2007. We are currently on Revision 3
5 which was submitted March 31, 2011. We have taken
6 eight chapter to the ACRS which is 2, 16, 8, 13, 11,
7 12, 5, and 10 previously to the ACRS. It has gone
8 through the Subcommittee and full Committee. Although
9 there's two COLAs associated with this chapter, today
10 we are only going to present the DCD.
11 CHAIR STETKAR: Just for the record,
12 parts of the review of this are based on Interim
13 Revision 4 of the DCD. Is that correct?
14 MR. KALLAN: Correct.
15 CHAIR STETKAR: Okay. Thanks.
16 MEMBER BROWN: Do we have that yet?
17 MS. BERRIOS: In the CD that I sent you.
18 MEMBER BROWN: I didn't get it.
19 MEMBER BLEY: It was surreptitious.
20 CHAIR STETKAR: It was a stealth
21 transmittal.
22 MEMBER BROWN: I only have Rev. 3.
23 That's why I asked. My Chapter 7 stuff is only Rev. 3
24 so --
25 CHAIR STETKAR: That's okay. This was

1 just -- the staff will explain it, I'm sure, when we
2 come up. I just wanted to get on the record what it
3 is we're reviewing here.
4 With that, I'll turn it over to MHI.
5 MR. SPRENGEL: This is Ryan Sprengel with
6 MNES, DC licensing manager. Thank you all,
7 Subcommittee members. I think we've had many good
8 interactions in the past and look forward to hopefully
9 a lot of interactions this year. I think we've got a
10 lot of chapters getting ready to come through you guys
11 so we'll look for continued good interactions.
12 For today we are looking at Chapter 9, as
13 was mentioned. I want to touch on that real quick.
14 We are on DCD Chapter 3 -- Rev. 3, but we did do a
15 markup. We had a lot of changes through our
16 interactions with the staff and to facilitate looking
17 at all these changes we submitted a compilation and it
18 just showed a markup. It's what would become Rev. 4
19 but we have not submitted Rev. 4.
20 CHAIR STETKAR: You haven't, but just for
21 clarity what we'll hear today from the SER and what
22 we'll hear from you today is the status of the design
23 as of that markup Interim Rev. 4. Is that correct?
24 MR. SPRENGEL: That is correct.
25 CHAIR STETKAR: The only reason I want to

1 make that clear is because in at least the Component
2 Cooling Water System there were substantive changes.
3 MR. SPRENGEL: Absolutely.
4 CHAIR STETKAR: We're going to be talking
5 the Interim Rev. 4 version of that.
6 MR. SPRENGEL: That is correct.
7 MEMBER BLEY: I wonder if it's possible
8 when you make your presentations to highlight the
9 things that have changed across that revision.
10 MR. SPRENGEL: I think that will be a
11 focus.
12 MEMBER BLEY: It might preclude some
13 questions.
14 MR. SPRENGEL: Yes. Agreed.
15 CHAIR STETKAR: If they don't, I'll try
16 because I compared the two.
17 MEMBER BLEY: Thank you.
18 MR. SPRENGEL: Okay. As you can see, we
19 brought many people to support many experts and we are
20 prepared for today and tomorrow so whatever you guys
21 need we are ready to support. Hopefully we don't go
22 into Saturday.
23 CHAIR STETKAR: We won't do that. I have
24 a flight Saturday morning.
25 MR. SPRENGEL: As we've done in the past,

1 if there is anything that we are not able to get back
2 to you on today or tomorrow, we'll follow up in the
3 future with written responses.
4 For now I will go and turn it over to Jim
5 Curry.
6 MR. CURRY: Good morning. My name is Jim
7 Curry and we are representing Mitsubishi Energy
8 Systems and Mitsubishi Heavy Industries, the team here
9 today, to discuss Chapter 9, Auxiliary Water Systems.
10 As Mr. Prengel said, we appreciate the opportunity to
11 meet with the Subcommittee.
12 The MHI team today includes system
13 experts, contractors, licensing personnel, and members
14 of the MNES and MHI management team. Each Chapter 9
15 section, 9.1 through 9.5, will be represented by a
16 subset of this MHI team and the subset will be
17 primarily at this table or at the end of the table
18 over to my right.
19 There are also additional key folks who
20 are present in the audience and we can access
21 documentation on our servers as necessary to get the
22 best information for the Committee.
23 Today we plan to focus on Chapter 9
24 subsections that we believe would be of most interest
25 to the Committee. As you have heard, Chapter 9 covers

1 a spectrum of systems. Some systems are safety
2 related and many are not. We'll probably focus on
3 those that have safety-related implications and spend
4 less time on other subsections. However, the team
5 here today includes members that can speak to any
6 subsection.
7 The presentation materials that we are
8 going to go through have the same general format which
9 includes introductory slides with an acronym list and
10 the names of the folks at this table and the table to
11 my right, some summary information including
12 simplified system schematics, and a table of SER open
13 items and confirmation items.
14 We can give you the current status as we
15 see it if you need for those open items. We also have
16 some additional backup information slides which we may
17 use if needed. If it's acceptable to the Committee,
18 we plan to proceed in numerical order starting with
19 Section 9.1, Fuel Storage and Handling.
20 CHAIR STETKAR: That would be wonderful.
21 MR. CURRY: Good news. Off to a good
22 start. Okay. 9.1, as you know, is Fuel Storage and
23 Handling so I would like to introduce Naoki Kawata who
24 is here. Mr. Kawata is the deputy manager, MHI Water
25 Reactor Systems Engineering Section. He will be

1 supporting this presentation. I would also like to
2 introduce Mr. Yoshiyuki Tanigawa. Mr. Tanigawa is an
3 engineer, MHI Plant Layout Engineering Section.
4 Then the next three folks are with Holtec
5 International who are the designers of our fuel racks
6 and they are here to support us; Mr. Thomas
7 Fitzpatrick, Mr. Charles Bullard. Mr. Fitzpatrick is
8 the project manager. Mr. Bullard is the manager of
9 the structural group so he'll be here to answer rack
10 structural questions. Mr. Bret Brickner who is the
11 criticality expert on the team.
12 The acronym list, as we talked about.
13 We'll be going through each of these subsections of
14 9.1 in order as indicated. Let's start with the
15 criticality safety of the new and spent fuel pool
16 storage. You may find it helpful to take a look at
17 the second slide in this, which is labeled Slide No.
18 5, the second technical slide.
19 In summary, the new and spent fuel
20 storage facilities are located in the fuel handling
21 area of the reactor building. The US-APWR has the
22 containment vessel, pre-stressed concrete containment
23 vessel surrounded by a reactor building. We call this
24 the fuel storage area.
25 CHAIR STETKAR: Jim, just be sure you

1 don't get too far away from the microphones. We need
2 it for the transcript. A lot of times it's easier if
3 you use your mouse to point to things.
4 MR. CURRY: Thank you.
5 CHAIR STETKAR: The microphones are
6 pretty sensitive but if you stray too far away, we
7 have problems.
8 MR. CURRY: Thank you, Mr. Chairman.
9 That's helpful.
10 Okay. So, in any event, the new and
11 spent fuel storage facilities again, as I said, are
12 located in the fuel-handling area of the reactor
13 building. The reactor building is seismic Category I.
14 New fuel is stored in low density racks. Spent fuel
15 is stored in moderate density racks. The new fuel is
16 stored dry. Spent fuel is stored in borated water.
17 In the new fuel storage pit, as we call
18 it, we have the capability for 180 fuel assemblies.
19 That corresponds to approximately one refueling batch,
20 normal refueling plus an additional 50 locations.
21 In the spent fuel area, spent fuel pit --
22 sorry. The spent fuel pit area we have the capacity
23 for 900 fuel assemblies which is about the amount of
24 spent fuel from 10 years of operation assuming a two-
25 year fuel cycle plus a full-core off-load.

1 CHAIR STETKAR: Jim.

2 MR. CURRY: Yes, sir.

3 CHAIR STETKAR: For configuration of
4 things, in the DCD that explains what you just said
5 pretty clearly, but it also mentions that there's a
6 rack with a capacity for 12 damaged fuel assemblies.
7 Where is that located?

8 MR. CURRY: The damaged fuel rack. Mr.
9 Tanigawa.

10 MR. TANIGAWA: Damaged fuel racks is
11 located in this area.

12 CHAIR STETKAR: Oh, okay. Okay. Because
13 the drawing showed the configuration of the spent fuel
14 racks, the 900. I didn't know whether that consumed
15 the entire volume for all practical purposes of the
16 spent fuel pit. It's over in one end of the spent
17 fuel pit. Thanks.

18 MR. CURRY: The cooling and water quality
19 of the spent fuel pit is maintained by the spent fuel
20 pool cooling -- spent fuel pit cooling and
21 purification system which we'll be discussing as part
22 of Subsection 9.1.3.

23 The new and spent fuel storage, as I
24 mentioned, these are in Category I structures designed
25 to withstand the design basis external event

1 conditions there defined in Chapter 2 of the DCD.
2 Spent fuel and new fuel racks are designed to maintain
3 subcriticality requirements consistent with 10 CFR
4 50.68 and we'll talk about that in a second.
5 Equipment could potentially damage fuel if it were to
6 fail is designed as seismic Category I. So sorry,
7 seismic Category II.
8 MEMBER BROWN: You're talking about the
9 cranes?
10 MR. CURRY: Yes, sir. Yes, sir.
11 The next couple of slides will kind of
12 summarize the criticality analysis and will also
13 summarize the structural requirements for the racks.
14 As I mentioned, criticality requirements
15 are specified in 10 CFR 50.68 so we meet those
16 requirements for the new fuel racks. New fuel racks
17 are stored -- new fuel is stored dry. Spent fuel
18 storage rack we do use soluble boron. Once again, we
19 comply with these requirements which are 10 CFR 50.68.
20 Kind of some key points of the analysis
21 conditions. The maximum enrichment 5 percent
22 specified in the regulation. The appropriate assembly
23 tolerances were considered in a criticality
24 evaluation. Credit is taken for a neutron absorption
25 in the racks. I think metamic is fundamentally what's

1 used here. And, of course, dimensions are
2 appropriately considered.
3 New fuel storage is constructed of
4 stainless steel with the assumption of concrete
5 reflectors in the calculations. Spent fuel storage
6 rack stainless steel metamic.
7 MR. BRICKNER: There's no metamic in the
8 refuel.
9 MR. CURRY: Spent fuel?
10 MR. BRICKNER: Spent fuel.
11 MR. CURRY: Yes. Spent fuel, right, is
12 metamic, and the assumption of an infinite rack array
13 in the lateral direction.
14 MEMBER SHACK: With the metamic, that's a
15 naked aluminum, right?
16 MR. BRICKNER: It's a powder metallurgy.
17 MEMBER SHACK: It's a powder metallurgy
18 but, I mean, it's boron carbide and aluminum matrix.
19 MR. BRICKNER: Yes.
20 MEMBER SHACK: So it's essentially
21 exposed to the environment as unclad aluminum.
22 There's no stainless steel clad on this stuff.
23 MR. BRICKNER: There is a sheathing.
24 It's encapsulated in a sheathing but it's not sealed.
25 MEMBER BROWN: What do you mean byu

1 sheathing?

2 MR. BRICKNER: There's a stainless steel

3 covering. The metamic is not mechanically fastened to

4 the rack structure.

5 MEMBER SHACK: But it's exposed to the

6 coolant.

7 MR. BRICKNER: It is. Correct.

8 MEMBER SHACK: And the pH of this stuff

9 is? The pH limits in the pool is?

10 CHAIR STETKAR: It's 4,000 ppm boric

11 acid.

12 MEMBER SHACK: Whatever that is.

13 MR. BRICKNER: I can't answer the pH

14 levels in the pool.

15 MR. CURRY: If you give us a second,

16 we'll look that up for you and get back to you.

17 MEMBER SHACK: Fine. It just seems like

18 you're in a corrosive region for aluminum.

19 MR. BULLARD: There is a topical report

20 that's been submitted to the NRC specifically on the

21 use of metamic and spent fuel rack applications that I

22 would point you to. It has been used and is installed

23 in many spent fuel pools.

24 CHAIR STETKAR: At this types of pH

25 levels, though? A lot of spent fuel pools don't quite

1 have this boron concentration.

2 MR. BULLARD: That I don't know. I

3 cannot confirm your answer.

4 MEMBER BROWN: Does the sheathing really

5 encapsulate the metamic or is it -- you said it's not

6 bonded.

7 MR. BULLARD: It's not sealed so the

8 sheathing covers the metamic and then the sheathing

9 itself is stainless steel like the rack so wall

10 material. That sheathing is fillet-welded and spot-

11 welded along its perimeter. There's a flange.

12 MEMBER BROWN: But water can get between

13 it and the --

14 MR. BULLARD: But there are openings at

15 the corners where there is access where the coolant

16 can get beneath the sheathing. Metamic is also used

17 in dry storage cask applications as well.

18 MR. CURRY: So we'll take as an action

19 the pH requirements for the pool and see if we can get

20 back to you on that.

21 CHAIR STETKAR: Do you happen -- the

22 topical report had the same type of configuration open

23 where the metamic is exposed to the coolant. It

24 wasn't a sealed --

25 MR. BULLARD: Seam rack construction.

1 CHAIR STETKAR: Seam rack construction.

2 MEMBER SHACK: Now, do you sometimes
3 anodize this or is this always used in an untreated
4 condition? Here it says it will not be anodized so it
5 sort of sounds as though that maybe sometimes you do.

6 MR. BULLARD: I would have to confirm
7 that. I think the condition that is used here --

8 MEMBER SHACK: Is the standard condition?

9 MR. BULLARD: -- is the standard
10 condition. I'm not aware of any applications where
11 it's anodized.

12 MR. CURRY: All right. I would propose
13 we move onto the structural requirements. The design
14 and stress analysis of all the racks is consistent
15 with Reg Guide 1.29 for seismic design. The load
16 combinations, as indicated, are consistent with SRP
17 Section 3.8.4.

18 The racks are free-standing. They can
19 withstand a maximum uplift force based on the lifting
20 capacity of the suspension hoist and the refuel
21 machine which I think is 4,400 pounds. Of course, we
22 can maintain a subcritical array in the event of any
23 fuel handling accident. That's kind of a summary of
24 the structural piece. Does anyone have any questions
25 on the structural design?

1 CHAIR STETKAR: No, I think I'll wait
2 until we bring up slides -- a few slides ahead before
3 I ask a couple of questions. Continue.
4 MR. CURRY: Okay. We have some
5 confirmatory items and one open item, I think, which
6 we're working on with the staff. We recently received
7 an RAI response March 5th so we'll be replying to that
8 within 60 days. I think that's fundamentally what we
9 had to say about new and spent fuel storage.
10 CHAIR STETKAR: Let me ask one -- I was
11 trying to think about the most appropriate place to
12 ask it and I can't decide so I'll ask it now. You
13 might want to, just for reference, bring up your slide
14 No. -- okay. I've lost track here. No. 15, I think,
15 unless you have a better one. There's a figure in the
16 CDC that is Figure 9.1.4-2 that a bit better
17 illustrates the question I was going to ask, but this
18 one might do.
19 The question is, and it's difficult to
20 look at this elevation view and the plan view at the
21 same time. There are -- in this elevation view there
22 are weir walls. There are gates that separate the
23 spent fuel pit from the transfer canal and irrigates
24 that separate the cask pit and the fuel inspection pit
25 from the transfer canal.

1 Those weir walls, the gates, as best as I
2 can tell the bottom of the slot of the gate, in other
3 words if you remove the gate, the bottom of that slot
4 appears to be about, and I didn't have all of the
5 dimensions available, but about two-and-a-half feet
6 roughly above the top of the active fuel. It might be
7 a little bit more, might be a little bit less. I was
8 curious whether you know what that elevation
9 difference is.
10 MR. CURRY: Let me confirm, but in all
11 cases we really have, I think, 11.1 feet above the top
12 of the fuel but let me confirm with Mr. Tanigawa.
13 CHAIR STETKAR: In other words, the
14 reason I brought up this elevation if, for example,
15 the top of the gray area was the bottom of that gate
16 as if this is shown with the gates removed, the water
17 level at that elevation, I think, is about 2.5 feet
18 above the top of active fuel.
19 I don't know exactly where the top of
20 active fuel is so it might be 2.75 feet or something
21 like that. The key is it's not 12 feet. I just
22 wanted to confirm that elevation because if I'm wrong,
23 then some of the questions, follow-on questions, that
24 I was going to ask are less significant.
25 MEMBER BROWN: The SER says 10 feet.

1 MR. CURRY: I think that's the minimum
2 requirement.
3 MEMBER SHACK: That's the number I sort
4 of had in my head.
5 CHAIR STETKAR: That's fine. That's
6 minimum required water level for shielding and
7 cooling.
8 MEMBER SHACK: Since there was a gate
9 failure, the SFP will maintain 10 feet.
10 CHAIR STETKAR: I want to ask what the
11 elevation of the bottom of the slot is.
12 MR. CURRY: Okay, Mr. Chairman. We have
13 that slide of figure 9.1.4-2. Look on that figure.
14 Unfortunately, we don't have it up on the screen here
15 for everyone to see.
16 CHAIR STETKAR: The elevation of what it
17 says weir is 47 feet 10 inches. The bottom of the
18 spent fuel pool is 30 feet one inch. The height of a
19 fuel assembly, if you look at the assembly that's in
20 the grappling hook there, is about 15 feet roughly.
21 If I add 15 feet to 30 feet, I come up to 45 feet
22 which gives me about 2.5 feet. That's sort of what I
23 was estimating but I didn't know if I was
24 misinterpreting something on this drawing.
25 MR. CURRY: Your real concern is if we

1 had a failure of that gate, we'd only have two feet
2 above.
3 CHAIR STETKAR: Not a failure. My
4 concern is if I have the dimension -- I want to make
5 sure I have the dimensions correct first. Let me --
6 perhaps you can study the drawings and get back to
7 keep the discussion going. Here's the genesis of my
8 question.
9 I understand basic refueling operations.
10 I understand fuel movements. I understand minimum
11 pool water levels. I understand anti-siphon devices.
12 I kind of understand all of those things. I also know
13 that there can be failures that may occur. I'm not
14 saying anything about the probability of those
15 failures.
16 There can be failures that may occur
17 while the weir gates are removed that could
18 conceivably drain the spent fuel pool level down to
19 the height of that weir wall, whatever that is. The
20 questions that I had, if those -- have you looked at -
21 - do you have any information about the time until
22 boiling would occur if you were drained to that level
23 and the time until fuel uncovery would start if
24 drained to that level?
25 Because you've uncovered the cooling

1 water -- you know, the cooling system suction lines
2 are much higher than that. Basically once you drain
3 down to that level the only cooling you have available
4 is through some alternate makeup supply and times to
5 boil-off.
6 If you have information about starting
7 from that level, the time to reach boiling and the
8 time to uncover -- to start uncovery of the fuel, or
9 more accurately the time to start damaging the fuel
10 because just fuel uncovery in this configuration won't
11 necessarily start damage. I'm interested in those
12 times. It's a way to sense under kind of the most
13 extreme conditions what kind of time margins we have
14 available.
15 MR. CURRY: We do have information on the
16 time to boil which given loss of all spent fuel pool
17 cooling.
18 CHAIR STETKAR: But starting at the
19 initial --
20 MR. CURRY: Right. But I don't have it
21 starting at the level that you're talking about. I
22 think what we need to do is follow up on your
23 suggestion and let us take a look at this figure and
24 make sure we can give you a good answer on the
25 potential water level given the failure -- you're

1 postulating a failure of this.

2 CHAIR STETKAR: It would require some

3 drain-down condition. As I said, at the moment I

4 don't want to enter into probabilities of these things

5 happening. I'm just trying to get a sense of what the

6 margins might be and what sort of times are available.

7 Don't necessarily read anything more into this than

8 simply trying to understand what those times and

9 margins are.

10 MR. CURRY: From this particularly

11 configuration that you're referring to?

12 CHAIR STETKAR: Level at the weir.

13 MR. CURRY: Right.

14 CHAIR STETKAR: Whatever the water volume

15 is.

16 MR. CURRY: Okay.

17 CHAIR STETKAR: And as kind of a related

18 question to that, we may get into a little bit more of

19 the systems in the coming slides here but this is

20 useful. Do you know whether the fuel transfer tube

21 has a drain line from it? I couldn't find any

22 detailed information.

23 I'll tell you, my experience is some of

24 them do and some of them don't. It's kind of a

25 design-specific issue. That's why I ask. Is there a

1 drain line connection to the bottom of the transfer
2 tube or is this simply a tube?
3 MR. CURRY: One moment. No, the fuel
4 transfer canister. That's really your question.
5 CHAIR STETKAR: Well, the fuel transfer -
6 - again, if you've got that 9.1.4-2 slide, I'm talking
7 about the tube itself that goes through the wall
8 between the transfer canal and the refueling cavity,
9 the tube that the little car goes through.
10 As I said, some plant designs I've seen
11 have a drain line in that transfer tube connection and
12 many plants don't. It doesn't how on this 9.1.4-2 but
13 that's not the purpose of this figure. The purpose of
14 this figure is just to show the general configuration.
15 I was curious about is there a drain line. I don't
16 need the answer right now. If you don't have it, just
17 take it.
18 The other questions that I had about
19 possibly drain lines is are there drain lines from the
20 three volumes that you show on the right-hand side of
21 this figure, in particular a drain line from the
22 transfer canal, a drain line from the cask -- the pit,
23 and a drain line from the fuel inspection pit. I'm
24 assuming that there are because you need to drain
25 those somehow usually.

1 MR. CURRY: Okay. We'd like to confirm
2 that answer.
3 CHAIR STETKAR: As long as -- when you go
4 back I'm interested in are there drain lines, yes or
5 no, and, if there are drain lines, how large are they
6 in terms of just size.
7 MR. CURRY: Yes, sir. We'll look at it
8 in more detail.
9 CHAIR STETKAR: That's fine. The purpose
10 of these meetings is to raise questions, as many as we
11 can get answered during the meeting. That's good for
12 everyone. If we can't get them answered, you know,
13 they're take-aways.
14 Thank you. Oh, one other question. Some
15 of these questions are basic configuration questions
16 that I had. This drawing -- just a simple question.
17 I think I know the answer to this. I just want to
18 confirm it. On Figure 9.1.3-1 of the DCD, it's the
19 drawing -- it's essentially the DCD drawing of what
20 you have on the screen here.
21 The containment spray RHR cooling line
22 suction elevations on that drawing are shown lower
23 than the spent fuel pit cooling suction lines at a
24 lower elevation. I didn't know whether that's
25 actually the case or whether it's just the way to show

1 both suction lines on the same drawing if they are at
2 the same elevation.
3 My question is are the containment spray
4 RHR suction lines located at the same elevation as the
5 spent fuel pit suction lines? I found a lot of
6 information in the DCD about the elevation of the
7 spent fuel pit suction lines. It may just be an
8 artifact of the way that drawing was put together to
9 show the two of them.
10 MR. CURRY: Mr. Kawata.
11 MR. KAWATA: Yes. This is Naoki Kawata.
12 Section related to containment spray RHR pump is same
13 as spent fuel pit suction lines.
14 CHAIR STETKAR: Thank you. That helps.
15 Thank you. With that I think now I'm pretty happy.
16 You can start talking about the cooling system.
17 MR. CURRY: Okay. Thank you. All right.
18 I think we understand we need to do a little research
19 and we'll get back to you on those issues that you
20 cited.
21 I think now we want to go to 9.1.3 and
22 perhaps -- just to confirm with the Committee, our
23 Holtec folks, structural criticality, we are going to
24 replace them at this table at the moment, if the
25 Committee has no objection, and talk from a system

level perspective. Mr. Kawata will join us at this table.

Okay. As we mentioned before, Mr. Kawata is the deputy manager, MHI Water Reactor Systems Engineering Section. Let us talk about the SFPCS, Spent Fuel Pit Cooling and Purification System. We've already taken a peek at the slide that we'll be referring to.

Two redundant cooling and purification trains. Fundamentally the system has a safety-related function and a non-safety-related function. Safety-related function is the cooling function. The non-safety-related function is the purification and cleanup function.

Each train includes a pump, heat exchanger, a plate-type heat exchanger, a filter, and a demineralizer. They can be powered from our Class 1E sources. Obviously the SFPCS removes heat generated by spent fuel assemblies and it purifies water for several sources including the RWSP and refueling water storage auxiliary tanks.

Again, we need to follow up on your question from earlier but the piping and dates are arranged so that a failure will not result in a level less than 11.1 feet above the top of the assembly. We

1 do have a seismic makeup source from the RWSP and the
2 emergency feed-water pits.
3 The emergency feed-water pit could be a
4 gravity-feed source. The design capability of the
5 system is that the trains in conjunction with two
6 trains of the RHR we can maintain spent fuel pool
7 temperature below 120 degrees even with a full core
8 off-load.
9 CHAIR STETKAR: The seismic we qualified,
10 the makeup is from the fuel and water storage pit.
11 Right?
12 MR. CURRY: That is a seismically
13 qualified source.
14 CHAIR STETKAR: And that's the only one.
15 Right?
16 MR. CURRY: No. The emergency feedwater
17 it is also a seismic one.
18 CHAIR STETKAR: The pit is qualified, the
19 piping isn't. In an earthquake the pit may remain
20 full of water. The pipe in between may be broken so
21 it's hard to figure out how to get water from point A
22 to point B.
23 MR. CURRY: Right.
24 CHAIR STETKAR: It's my understanding
25 that the connecting pipe from the EFP, the emergency

1 feedwater pit, to this connection that's shown up here
2 is not seismically qualified. Is that correct?
3 MR. KAWATA: Yes, that is correct because
4 SRP is second water source, the makeup water source.
5 It is not seismic.
6 CHAIR STETKAR: I just want to make sure
7 that I understood that -- I understand that the line
8 that you show coming from the RWSP recirculation pump
9 is fully qualified all the way, and that the other
10 sources from -- although the EFW pit itself is a
11 seismic structural -- structurally seismically
12 qualified, the piping between those is not, as is not
13 the demineralized water supply. I think there is an
14 alternate even from the Fire Protection System you can
15 pipe in somehow. You do have one seismically
16 qualified from the RWSP.
17 MR. CURRY: Yes, sir.
18 CHAIR STETKAR: Fully qualified the whole
19 length. Okay.
20 MR. CURRY: So you see the schematic
21 here. I think one of the members mentioned earlier we
22 were referring to Interim Rev. 4. What that really
23 was is a response to RAIs so the schematic here shows
24 the isolation of the non-safety portion which is
25 indicated by the equipment classification from 3 to N.

1 This shows only a single valve but we replaced that in
2 response to an RAI with double-valve isolation. On
3 the supply side automatically closed valves, check
4 valves.
5 CHAIR STETKAR: And they are
6 automatically closed valves now?
7 MR. CURRY: Yes, sir.
8 CHAIR STETKAR: Yes, sir.
9 MR. CURRY: Low-low spent fuel pool
10 level.
11 CHAIR STETKAR: Low-low spent fuel pool
12 level. Okay. Is that true?
13 MR. CURRY: The spent fuel pit level,
14 yes.
15 CHAIR STETKAR: Terminology. SFP is
16 always spent fuel pool to me so you'll have to excuse
17 me.
18 MR. CURRY: I understand.
19 CHAIR STETKAR: That's interesting
20 because that still makes my question relevant. The
21 spent fuel pit demineralizers, as is shown on this
22 drawing, can be aligned for cleanup of the refueling
23 water storage pit. The line is coming in at the top.
24 You go through the demineralizer and go back out to
25 the refueling water storage pit recirculation pump --

1 pumps, plural.

2 If you're aligned in a refueling water

3 storage pit cleanup mode so that you have one or, in

4 the principle, it could be both of the demineralizers

5 aligned to the refueling water storage pit, and you

6 have a break in this section of the system, the

7 nonseismically-qualified section of the system, how do

8 you isolate that break and prevent the refueling water

9 storage pit from draining down into the fuel building?

10 MR. CURRY: One moment.

11 CHAIR STETKAR: When the valves are

12 manual I was going to ask where the scuba tanks are

13 but since they are automatic, I can ask other

14 questions.

15 Jim, in the interest of time, I mean, you

16 know, you guys can discuss this during the break or

17 lunchtime.

18 MR. CURRY: Thank you, sir.

19 CHAIR STETKAR: We have, you know, at

20 least all day today and probably until tomorrow to

21 scheduled for the meeting. Even if you want to take

22 some of these away and even discuss them this evening

23 if we go into tomorrow, we can kind of cleanup loose

24 ends that way.

25 MR. CURRY: Thank you, sir. We

1 appreciate it.

2 CHAIR STETKAR: I'm sure we'll have time.

3 There is also the danger of trying to answer questions

4 on the fly sometimes because you may not get the right

5 information on the record. Since everything is on the

6 record, it's good to have the information correct.

7 MR. CURRY: Yes, sir.

8 CHAIR STETKAR: As you're thinking about

9 that in terms of to kind of follow along just so you

10 have the entire notion of what the question was going

11 to be, the question is how will it be isolated if

12 you're taking credit for manual isolation somehow,

13 it's important to understand where those valves are

14 located.

15 For example, if you do get flooding in a

16 compartment and the valves are under water, it's

17 pretty difficult for somebody to operate those valves

18 manually. Even if they're automatic isolation valves,

19 if they are in the flooded compartment, they may not

20 operate. I would like to know physically where those

21 valves are.

22 If they are in the same compartment with

23 the nonqualified piping that could be broken, they may

24 be submerged in a flood which could make it fairly

25 difficult to isolate under either condition.

1 I mean, whether it's spent fuel pit or
2 the RWSP. Also to kind of follow that line, if you
3 had some estimate from at least operating experience,
4 is this configuration similar to plants that are
5 currently operating in Japan in terms of the spent
6 fuel pit cooling and cleanup and connection to an
7 RWSP?
8 MR. KAWATA: It is similar.
9 CHAIR STETKAR: It is similar? Okay. If
10 you had some information about how frequently the
11 spent fuel pit demineralizers are aligned for cleaning
12 the RWSP, I mean, is it something that's done two days
13 every month or is it only done during preparations for
14 refueling?
15 That type of information would also help
16 in terms of understanding if you are vulnerable to a
17 break in this location that could be connected to the
18 RWSP what fraction of the year, at least from actual
19 operating experience. That I'm sure you won't be able
20 to have in terms of time for this meeting. Those were
21 all sort of subsidiary questions to the first issue.
22 Thank you.
23 MR. CURRY: All right. Well, I think
24 basically we've kind of summarized the system just
25 to --

1 MEMBER BROWN: If you're done, I'm not
2 quite finished yet, I guess. You did address
3 instrumentation when you talked about this. Looking
4 at the DCD and then the SER as well, I didn't find any
5 real definition but it appeared that there was no
6 definition of how many level and/or temperature
7 sensors you have installed in the spent fuel pool.
8 The drawing you reflect, if you take the
9 one out of the DCD, gave the impression that there
10 were two level sensors but only one temperature
11 sensor. There's only one little stalk in there.
12 There's two things off of it but I don't know what --
13 I don't know the convention for that particular symbol
14 as to how many they are.
15 The second question associated with that
16 relative to temperature is if you've only got one and
17 it's only in one place, how do you know that's
18 representative of the overall bulk temperature in the
19 spent fuel pool? I often try to look at the flow
20 rates and I couldn't tell what the flow rates were.
21 There were numbers like 200 or 300 GPM and then I saw
22 the pumps were for 3,000 GPM or some large number like
23 that.
24 I'm an electrical guy so I couldn't
25 relate to what the actual requirements were.

1 Obviously if there's some flow, but I don't know what
2 that is to maintain a reasonable uniform temperature
3 throughout the spent fuel pool.
4 The question that falls from that is if
5 you lose power and you don't have any flow, how do you
6 know you don't have one part of the pool since the
7 fuel is not all uniformly hot? Some of it is older
8 than newer spent fuel. How do you know you're not
9 hotter in some locations you could be damaging than
10 you have in another?
11 MR. CURRY: Let's start with the
12 instrumentation piece of that, the leveling
13 temperature indication.
14 MR. KAWATA: No, we have two temperature
15 gauge.
16 MEMBER BROWN: You have two temperatures
17 and two levels. Is there an RAI? I don't have the
18 number for that. I didn't find it. I presume you all
19 could tell me what the RAI is looking at that where
20 they changed their design for that. I don't want it
21 right now. It's just a matter of --
22 MR. HAMZEHEE: When the staff gets here
23 we'll try to get you the RAI number for that.
24 MEMBER BROWN: Then we can look at it and
25 see what it is. Also, the location relative to the

1 overall one end of the pool vice the other. Then
2 maybe if somehow you can address if there was no
3 power.
4 Has somebody done an analysis that
5 natural circulation is going to maintain a temperature
6 of uniformity or are you going to have a big disparity
7 from one point to another? Again, if it's not quick,
8 I don't want to drag us. This is just a question that
9 does not have to be answered right now.
10 MR. CURRY: Okay. We can look that up
11 then.
12 MEMBER BROWN: I don't want to drag the
13 meeting out while everybody looks the thing up.
14 MR. CURRY: We'll see what we can do.
15 MEMBER BROWN: The second question --
16 another question associated with that. What are the
17 types? Are they continuous measurements for
18 temperature or are they just a high and a low single-
19 point measurements to say, "Hey, look. I'm too high,"
20 and, therefore, I tell somebody I got an alarm, or do
21 I have a continuous readout on it? The same thing
22 goes for the level.
23 Are they continuous or just a pressure
24 switch type of arrangement which just says it's too
25 low because I don't have a certain pressure? That's

1 the second part to go along with that. That can be
2 answered, again, at the same time that you answer the
3 other one. Thank you.
4 MR. KAWATA: I understand.
5 MR. CURRY: All right. We would -- if
6 there are no other questions --
7 CHAIR STETKAR: Yeah, there are. You'll
8 learn. Related to -- the reason I wanted you to keep
9 the drawing up there is I had a couple of other
10 questions about the system and go back to the makeup.
11 There are statements in the DCD about the seismically
12 qualified makeup from the refueling water storage pit
13 recirculation pumps. That is the qualified makeup
14 supply.
15 Are the -- I couldn't find much
16 information about the RWSP recirculation pumps in the
17 DCD. There is a drawing that shows the configuration
18 of the piping and so forth and there's a discussion of
19 the containment isolation valves for them and things
20 like that.
21 In particular, I went through the
22 electrical load list in Chapter 8 and I couldn't find
23 the power supplies for those pumps. Are they powered
24 from Class 1E electrical buses or are they non-Class
25 1E power supplies?

1 MR. KAWATA: Yes.

2 CHAIR STETKAR: They are? Do you know
3 what buses they are supplied from? I couldn't find
4 them.

5 MR. KAWATA: The table shows --

6 CHAIR STETKAR: If it's in the DCD, just
7 point me to the place in the DCD. I probably missed
8 it.

9 Just identify yourself for the record.

10 MR. KAWANAGO: Shinji Kawanago from MNES.
11 Basically that's in the pump and the power supply from
12 the Class 1E load center. It's a roll bore gauge.
13 It's a full load center so you cannot find --

14 CHAIR STETKAR: Oh, it's from an MCC down
15 below the load center? Okay. Because I looked at the
16 load centers and I couldn't find them. Thank you.
17 Thank you. That answers basically that question. In
18 the interest of keeping us going, I have pages of
19 things here but I'm a slow reader and I think I got
20 most of the information I wanted. I'll stop holding
21 you up.

22 MR. CURRY: No problem.

23 All right. We would propose moving to
24 light load handling system.

25 CHAIR STETKAR: Oh, I did -- I'm sorry.

1 I'm trying to look ahead in your slides to see what
2 the topics are and get my babbling into the process at
3 the appropriate time. Since you're going to the light
4 load handling system, I wanted to kind of get the
5 questions that I had about not only the cooling system
6 configuration but some of the cooling system success
7 criteria. This is just a question. As I understand
8 it, your refueling is that basically it's a two-year
9 fuel cycle and you replace about half the core. Is
10 that right?
11 MR. CURRY: About 130.
12 CHAIR STETKAR: One third?
13 MR. CURRY: 130.
14 CHAIR STETKAR: Oh, yeah, 130 elements.
15 There are statements in the DCD about heat loads
16 related to normal -- either a normal refueling or a
17 full core off-load. I understand that the cooling
18 system capacity is based on full 10-year complement of
19 spent fuel in the pool with a full core off-load so
20 I'm not questioning that.
21 I was just curious is it normal practice
22 in similar plants in Japan when you do a refueling to
23 full off-load the core? Many plants in the U.S. do
24 that. They do a full core off-load. It's just a lot
25 easier.

1 It gives you more flexibility during the
2 outage because there's no full in the core and it's a
3 lot easier to move the fuel back in. I was curious
4 whether that's a similar practice in Japan when you do
5 a refueling. Do you do a full core off-load and then
6 reload the core, or do you only off-load the 130
7 elements and do a fuel shuffle?
8 MR. KAWATA: In Japan usually a full core
9 off-load.
10 CHAIR STETKAR: Okay. So essentially in
11 a normal refueling outage we'll have the full core in
12 the spent fuel pool for some number of days during
13 that outage so the full core off-load is actually the
14 normal refueling outage. That's basically what I
15 wanted to get on the record. Thank you.
16 MR. CURRY: I'm slower and slower to turn
17 the slides.
18 CHAIR STETKAR: This is an ACRS
19 Subcommittee. Often times we spend a lot of time with
20 just blank screens in front of us.
21 MR. CURRY: 9.1.4 Light Load Handling
22 System. Basically there are two cranes involved in
23 this system, two hoists; the refueling machine and
24 spent fuel handling machine. They are shown on these
25 -- on your following schematic.

1 The only safety-related function is
2 really the isolation of the fuel transfer tube for
3 containment purposes. The permanent cavity seal is
4 used to retain water in the refueling cavity during
5 refueling. The system is designed to meet the
6 referenced ANSI/ANS standard. As we talked about,
7 subcriticality is maintained even if the pool was
8 flooded with unborated water.
9 We would go to Heavy Load Handling
10 System.
11 CHAIR STETKAR: Okay. I was reading my
12 notes. Can you go back to Slide 20?
13 MR. CURRY: Slide 20?
14 CHAIR STETKAR: Yeah. Maybe you can help
15 me out. The DCD discusses -- this is the rapid cavity
16 seal. The DCD discusses a leakage detection system
17 for the cavity seal but I got -- there was not a
18 drawing or a very clear discussion of that leakage
19 detection system.
20 In some places I got the impression that
21 the leakage detection system was actually just
22 monitoring of level in the refueling cavity. I don't
23 know whether this drawing shows it or not. Is there a
24 separate leakage detection system that collects
25 leakage through the deal?

1 MR. CURRY: Directly under the seal?

2 CHAIR STETKAR: Yes, directly under the

3 seal. If there is, where is it?

4 MR. CURRY: I think if we could blow up

5 this slide --

6 CHAIR STETKAR: We can see it pretty

7 well.

8 MR. CURRY: Mr. Tanigawa-san, just to

9 confirm, leakage detection system underneath the

10 permanent cavity seal. Correct? Yes, there is.

11 CHAIR STETKAR: There is? Okay. Is it

12 just a set of channels? I don't care too much about

13 the design but there is a separate under the seal some

14 sort of collection system that you can monitor for

15 level or flow?

16 MR. CURRY: Through the ceiling.

17 CHAIR STETKAR: Leakage through the

18 ceiling. That's good. That's basically what I was

19 trying to confirm. In some of the discussion I kind

20 of got the incorrect impression that -- there was

21 discussions about level in the spent fuel pit is

22 monitored and alarmed in the control.

23 The refueling cavity is monitored and

24 alarmed in the control room and the operators will

25 have time to align makeup which is all true, but it's

1 not the same as a leakage detection system. Thank
2 you. Go to Heavy Load.
3 MR. CURRY: Okay. The Overhead Heavy
4 Load Handling System. Fundamentally, again, two
5 cranes, the Polar Crane and the Spent Fuel Cask
6 Handling Crane fall under this scope. These cranes
7 are non-safety related seismic II, single-failure-
8 proof consistent with NUREG-0554 requirements. Of
9 course, we have limitations on the crane movements.
10 CHAIR STETKAR: Can you go back to where
11 you show the plan view of the fuel building. You have
12 a couple of slides that show that. There. The
13 cask -- the spent fuel cask, whatever it's called --
14 crane. I'll call it crane -- can operate over the
15 right-hand side of this figure. There are some
16 drawings in the DCD that are pretty good that show
17 normal routes of that crane.
18 My question was can it physically move
19 over the spent fuel pit? I understand that it's not
20 normally required to do that but, for example, do the
21 crane rails for that crane extend to the left of the
22 center line of the transfer canal over the spent fuel
23 pit? Is it physically possible to move that crane
24 over -- be careful of the paper with the --
25 MR. TANIGAWA: I'm sorry.

1 CHAIR STETKAR: -- over the spent fuel
2 pit or is it physically limited to only the right-hand
3 side of this drawing?
4 MR. TANIGAWA: Spent fuel cannot extend
5 over the spent fuel pit physically and operate.
6 CHAIR STETKAR: That's all that matters.
7 Thank you.
8 I'll ask the staff about the other one.
9 Okay. Thank you.
10 MR. CURRY: I think that is fundamentally
11 what we had to say about the Overhead Heavy Load
12 Handling System. We have one open item which we're
13 working on with the staff.
14 CHAIR STETKAR: Let me -- you'll have to
15 excuse me. I have paper all over the place and I'm
16 trying to read my notes. The spent fuel cask handling
17 crane there is a discussion in the DCD that
18 specifically notes that the polar crane in the
19 containment has seismic restraints that prevent the
20 crane from coming off the rails.
21 In other words, there are seismic
22 restraints that prevent the crane from tipping and
23 sliding off the rails. There was no mention of a
24 similar seismic restraint on the spent fuel cask
25 crane. I was curious whether that crane has a similar

1 restraint to prevent lateral motion of the crane or
2 tipping and sliding off the rails.
3 I didn't have drawings of that crane so I
4 didn't know how it's configured. I don't even know
5 what the rails look like. Since it wasn't mentioned
6 and it was mentioned for the polar crane, I was
7 curious whether it exist.
8 MR. CURRY: Well, it is seismic II but
9 let us look.
10 CHAIR STETKAR: Even though it's seismic
11 II, it's kind of an additional confidence about
12 lateral motion and things like that.
13 MR. CURRY: One moment.
14 CHAIR STETKAR: Okay.
15 MR. CURRY: We would like to take that as
16 an item and --
17 CHAIR STETKAR: That's fine. Understand
18 fully.
19 MR. CURRY: I think that's all we have,
20 sir, on 9.1, in this case, the Overhead Load Handling
21 System. That concludes our presentation on 9.1.j
22 CHAIR STETKAR: Do any of the members
23 have any questions about -- any further questions
24 about spent fuel pit? Heavy load, light load
25 handling? I think we're scheduled to have a break at

1 10:00 but I don't want to -- you look concerned.

2 MEMBER BLEY: Well, I've been hanging on

3 one thing since the beginning with the heavy boron

4 concentration in the water. I know we don't have

5 emergency procedures or SAMGs as yet but what I've

6 been thinking about is -- I looked through the PRA and

7 the PRA dismisses everything about the spent fuel pool

8 for reasons stated.

9 If there should be something in an

10 external event that manages to somehow drain the water

11 lower than the design would let it drain, what

12 capabilities for refilling it and maintaining boron

13 exist? If you didn't maintain the boron, is there any

14 analysis of what would happen anywhere in the DCD? I

15 looked all over it and I couldn't find anything.

16 CHAIR STETKAR: We'll let them answer.

17 MEMBER BLEY: It looked like you were

18 waving your arms.

19 CHAIR STETKAR: No, I thought I found

20 something but I thought it's probably better for them

21 to --

22 MR. KAWATA: We can provide additional

23 boron water.

24 CHAIR STETKAR: Well, I think the

25 question is, you know, back to the criticality stuff

1 can you achieve criticality? What's the boron level
2 in the spent fuel pit that's required to prevent
3 criticality? Right, Dennis?
4 MEMBER BLEY: That's right. The kind of
5 thing I'm worried about it's certainly beyond the
6 design basis of that. We need to look harder and
7 harder at those.
8 CHAIR STETKAR: If you couldn't get
9 criticality with pure water in there with no boron,
10 that --
11 MEMBER BLEY: My question would certainly
12 go away.
13 MR. KAWATA: For normal fuel storage
14 there is no boron present.
15 MEMBER BLEY: I'm sorry?
16 MR. KAWATA: For normal fuel storage
17 there is no boron present.
18 MEMBER BLEY: Normally you would need no
19 boron?
20 MR. KAWATA: That's right.
21 MEMBER BLEY: Why is it there?
22 MR. KAWATA: Can you explain why we don't
23 need boron?
24 MR. CURRY: And we have Mr. Brickner.
25 MR. BRICKNER: This is Bret Brickner with

1 Holtec. We don't take credit for the soluble boron to
2 maintain criticality under normal conditions. We do
3 credit some partial soluble boron for the accident
4 condition.
5 MEMBER BLEY: And that accident condition
6 is?
7 MR. BRICKNER: Is a misplaced fuel
8 assembly outside the storage rack.
9 MEMBER BLEY: Ah, okay. So assuming that
10 isn't the case, and even in a severe case dumping pure
11 water in is fine?
12 MR. BRICKNER: That's correct.
13 MEMBER BLEY: That makes me happier.
14 Thank you.
15 MR. BRICKNER: That's good.
16 CHAIR STETKAR: I thought I read that.
17 MEMBER BLEY: I was looking all over for
18 it and I hadn't found it.
19 CHAIR STETKAR: Any other questions on
20 fuel flow, fuel storage, anything?
21 Let's take a break because I don't want
22 to interrupt -- we're going to start talking about
23 cooling water systems and I don't want to stop us mid-
24 stream in that. I think what we'll do is we'll take a
25 break until 10:05.

1 (Whereupon, at 9:50 a.m. off the record
2 until 10:07 a.m.)
3 CHAIR STETKAR: We're back in session.
4 MEMBER ABDEL-KHALIK: Mr. Chairman,
5 before we move to the next section, just one question.
6 What dictates the 4,000 bpm concentration of boron?
7 MR. CURRY: One moment. I think we want
8 to know the basis for the 4,000 BPM boron in the spent
9 fuel pit.
10 MR. NISHIO: The concentration of the SFP
11 is the same as the RWSP.
12 MEMBER ABDEL-KHALIK: Right.
13 MR. NISHIO: It doesn't state it is a
14 concentration of the RWSP from the safety analysis
15 based on the MSLB.
16 MEMBER ABDEL-KHALIK: Steamline break?
17 MR. NISHIO: Steamline break. We will
18 check on that. Based on the safety analysis we
19 defined the most critical, the highest requirement of
20 boron concentration of RWSP.
21 MEMBER ABDEL-KHALIK: So I guess we'll
22 get that when we talk about Chapter 15?
23 CHAIR STETKAR: Chapter 15, I think, is
24 coming up in June if I remember correctly, so we'll be
25 sure to try to understand that when we hear that

1 result.

2 MEMBER ABDEL-KHALIK: Thank you.

3 MR. CURRY: All right, 9.2. We have some

4 additional folks that will be participating in this

5 discussion. Marc Hotchkiss is representing MNES/MHI.

6 His specialty is chilled water and ventilation

7 systems. Junya Hattori-san. Mr. Hattori is the

8 deputy manager, MHI Turbine Plant Engineering Section.

9 Mr. Kawata-san you already met.

10 Motohisa Kitamori-san, please join us.

11 Mr. Kitamori is an engineer, Water

12 Reactor Systems, Engineering Section. Keita Otani.

13 Mr. Otani is an engineer in the Plant Layout

14 Engineering Section, HVAC System and Fire Protection.

15 We'll be calling on these gentlemen as we need for

16 each of the systems covered here.

17 First few slides are acronyms. The water

18 systems 9.2.1, 9.2.5, 9.2.7, 9.2.2. Essential Service

19 Water System, 9.2.1; Component Cooling Water System

20 9.2.2; 9.2.5 Ultimate Heat Sink; and 9.2.7 Chilled

21 Water System have safety-related implications. The

22 other systems do not.

23 Essential Service Water System, as I

24 mentioned, is a safety-related system. It transfer

25 heat from the safety-related loads to the ultimate

1 heat sink. It's obviously designed to mitigate the
2 consequences of a design basis event and for safe
3 shutdown, assuming a single failure and one train
4 unavailable due to maintenance.
5 The Essential Service Water System is
6 interlocked with the Component Cooling Water System on
7 a train-by-train basis. The system consist of four
8 50-percent-capacity Essential Service Water pumps
9 divided into four independent trains. In each line
10 there are two 100-percent-capacity strainers.
11 The system consistent with Reg. Guide
12 1.189 provides backup to the fire service system.
13 Again, you have a simplified schematic showing the
14 design. Part of the design of the Essential Service
15 Water System is plant specific. A good part of the
16 design is a conceptual design.
17 As I indicated, there are four. You see
18 the A, essential service water pump. There are four
19 of those pumps. You also see the two 100-percent-
20 capacity strainers in each line. The safety-related
21 loads are the component cooling water heat exchanger,
22 plate-type heat exchanger in the essential chiller
23 unit. The heavy black line is standard plant design.
24 CHAIR STETKAR: Before you move from this
25 slide, I found a statement in the DCD in Section

9.2.1.2.2.6. The statement says, "To avoid concerns with potential downstream pipe wall thinning, butterfly valves provided in the ESWS piping are not used for excessive throttling of the water flow.

The valves are sized such they are near the full open position during various modes of plant operation. Orifices having adequate differential pressures are installed downstream of the heat exchangers to prevent excess throttling of the butterfly flow control valves." What particular valves in this system are actually butterfly valves?

MR. CURRY: One moment.

CHAIR STETKAR: Only because I couldn't find something that I would normally consider a flow control valve. I saw a lot of locked-open manual valves and I got confused. I'm always interested in butterfly valves.

MEMBER BLEY: Just a quirk?

CHAIR STETKAR: Just a quirk.

MR. KAWATA: Okay. There are several.

CHAIR STETKAR: They may not show on this simply drawing but, if they do, I would appreciate it.

MR. KAWATA: For the standard design butterfly valves.

CHAIR STETKAR: They are all butterfly?

1 MR. KAWATA: Yes. The reason is the
2 butterfly valve is for isolation valve for flow
3 control.
4 CHAIR STETKAR: So if I look at -- let me
5 make sure I understand. If I look at Figure 9.2.1-1
6 in the DCD, the actual flow diagram, and I look around
7 the heat exchangers, there are valves that are shown
8 around the heat exchangers as locked-open manual
9 valves. Those are butterfly valves?
10 MR. KAWATA: Yes.
11 CHAIR STETKAR: Okay. Okay. I have to
12 ask. Why do you use butterfly valves as isolation
13 valves? Why not -- since they are locked open. Are
14 they locked in a throttled position or are they locked
15 fully open?
16 MR. KAWATA: Usually ESWS has piping over
17 24 inches. We use other types such as groves or gate.
18 It would really be difficult to procure the bar.
19 CHAIR STETKAR: Okay. It's just because
20 of the size of the piping it's a lot easier to find --
21 it's true it's a lot easier to find a large butterfly
22 valve. Okay. Okay. Thank you. Thank you. I
23 understand.
24 MR. CURRY: All right. Next system,
25 Component Cooling Water System.

1 CHAIR STETKAR: One kind of strange
2 question that I have. This is not particularly
3 related -- well, I'll wait until we get to the
4 ultimate heat sink. I'll wait until then. Sorry.
5 MR. CURRY: No problem, sir. Again, you
6 may want to refer to the simplified P&ID.
7 The Component Cooling Water System is a
8 closed, intermediate system between the essential
9 service water system. It's cooled by the essential
10 service water system. The system has a safety-related
11 portion and also has non-safety-related portions of
12 the system, non-essential loads. The non-essential
13 portions are isolated automatically with redundant
14 valving. I will point that out in a moment.
15 The Component Cooling Water System
16 consist of 200 percent cooling subsystems. On this
17 chart each of these two main sections is a subsystem
18 served by one surge tank separated by a partition in
19 the middle to divide the surge tank up.
20 Each subsystem consist of two 50-percent-
21 capacity trains, each train containing a pump and a
22 heat exchanger. Once again, the question came up
23 about Interim with the Rev. 4. That was what we had
24 submitted to the staff in terms of our DCD markups in
25 response to RAI questions.

1 If we were to look at this drawing, you
2 will see this double-valve isolation for the non-
3 safety portions. That was a result, for example, of
4 an RAI response and a change. That would be the
5 summary. I don't know if there are any particular
6 questions on that system.
7 CHAIR STETKAR: I have several questions
8 so you'll just have to bear with me. Just keep the
9 drawing up here so that we can use it as a reference.
10 The valves -- the valves that connect the two trains
11 to the common header so, Jim, on your -- those motor-
12 operated valves there, the 20 valves and the seven
13 valves, in Rev. 3 those valves received automatic
14 isolation signals.
15 They do not receive -- you've added the
16 isolation signal valves for the A2 and C2 headers that
17 you pointed out, those air-operated valves, and you
18 removed all of the isolation signals from those motor-
19 operated valves that you're showing there. Is that
20 correct?
21 MR. CURRY: That is correct.
22 CHAIR STETKAR: Okay. And it's noted in
23 the DCD that says, "In the event of an accident the
24 header tie-line valves, those motor-operated valves,
25 are closed by operator action from the main control

1 room to achieve independence between trains."
2 Essentially you're taking credit for a manual
3 action to replace a previously automated isolation
4 function. My question was I'm always concerned about
5 placing more burden on operators based on design
6 consideration. Why were the automatic isolation
7 signals removed from those valves?
8 MR. CURRY: The basic reason is that it
9 would isolate the thermal barriers. There is an SRP
10 requirement which the staff pointed out in an RAI. We
11 removed the automatic closure of the 20 and seven
12 valves, the header tie-line valves that you're
13 referring to that we would not automatically isolate
14 the thermal barriers.
15 CHAIR STETKAR: That's basically in
16 response to a question by the staff and we'll ask
17 about that later. Given the fact that they are now
18 manually operated from the main control room, and it
19 says in the DCD that they are closed when an operator
20 determines train separation is required, what
21 conditions require the operators to close those
22 valves?
23 I'm trying to understand now that the
24 operators are faced with a requirement to close these
25 valves under some conditions. I knew the conditions

1 before because I knew what the isolation signals were.
2 What conditions now would require the operators to
3 close those valves? I mean, the word accident is used
4 but I don't know what that means. Have you --
5 MR. CURRY: No particular accident
6 requirement. It's just to achieve train separation
7 and independence between trains.
8 CHAIR STETKAR: Does that mean if I'm an
9 operator in the control room, every time I have an
10 ECCS actuation, I must immediately go and close those
11 valves to achieve train separation? I mean, is that
12 something that's going to be in my emergency
13 procedures because that's an accident?
14 MR. CURRY: There is some guidance. I
15 mean, that will achieve train separation. There is
16 some guidance on the timing in which that should be
17 performed in order to achieve train separation.
18 CHAIR STETKAR: What's that guidance?
19 MR. CURRY: It's a SECY paper and I don't
20 have --
21 CHAIR STETKAR: I don't care about SECY
22 papers. I care about real plants and real designs.
23 MR. CURRY: But in order to achieve, you
24 know, guidance, train separation even to account for a
25 passive failure in a component, the SECY paper gives

1 us some guidance, some timeline for the operator
2 action.
3 CHAIR STETKAR: That's fine. What I'm
4 hearing is the staff had better be prepared to answer
5 my questions for this particular design what types of
6 accidents and what types of guidance will be included
7 in the emergency operating procedures for operator
8 actions to close those valves. I hope the staff will
9 be ready for that when we come to this system because
10 I'm going to ask about that.
11 MR. HAMZEHEE: Yes, sir.
12 CHAIR STETKAR: And --
13 MEMBER ABDEL-KHALIK: What if these
14 valves are automatically isolated or manually
15 isolated? Wouldn't you have the same concern about
16 the thermal barriers?
17 MR. CURRY: The -- right. The automatic
18 isolation is just to separate the trains. We
19 initially, I think, closed all those valves so that we
20 wouldn't and so we would -- we were interrupting flow
21 to the RCP thermal barrier.
22 MEMBER ABDEL-KHALIK: Okay.
23 CHAIR STETKAR: Let me make a quick note
24 here. Now, if I now follow on this drawing header A1,
25 there are -- the motor-operated valves that we just

1 talked about, let's say on the supply line, there are
2 motor-operated valves at the -- if I follow it down,
3 two motor-operated valves at the outboard side of the
4 containment penetration and then motor-operated valves
5 in the return line. None of those valves have any
6 automatic isolation signals. Is that correct?
7 MR. CURRY: That would be correct.
8 CHAIR STETKAR: There were formerly
9 isolation signals for the containment isolation valves
10 and they've been removed so the entire flow path now
11 from train A and B through the A1 header back to the
12 train A and B are all manually operated valves.
13 Right?
14 MR. CURRY: That is correct. Let me
15 confirm with Kawata-san but I believe the only
16 automatic isolation we have in this system now is that
17 one.
18 CHAIR STETKAR: That was my understanding
19 trying to go through Interim Rev. 4. Now, I
20 understand all of that piping is seismic Category I.
21 Is that correct or not?
22 MR. CURRY: Well, not in the --
23 CHAIR STETKAR: No, no, no. In the A1
24 header.
25 MR. CURRY: Yes, sir.

1 CHAIR STETKAR: Okay. If I have a break
2 in that header anywhere, though, without operator
3 intervention I will disable both of the associated
4 component cooling water trains. Right?
5 MR. CURRY: Just to be clear, a break in
6 the safety-related portion?
7 CHAIR STETKAR: Yes. I mean, to
8 emphasize it, you go down to the lower left-hand
9 corner and break it where it says A1 header inside CV.
10 In principle, anywhere in that common header I'll
11 disable both of those component cooling water trains.
12 MR. CURRY: I should say we do have an
13 RAI.
14 CHAIR STETKAR: I was going to ask.
15 There is an RAI and an open item. Is the open item
16 specifically addressing that issue because it wasn't
17 clear. I was kind of bouncing back and forth from the
18 SER. So it does address -- so there is --
19 MR. CURRY: That's the subject of that
20 RAI.
21 CHAIR STETKAR: Right. That's the
22 subject of this one.
23 MR. CURRY: 878-6200.
24 CHAIR STETKAR: Good. I just wanted to
25 make sure that we're talking -- that I understood the

1 subject of that RAI. The problem is we don't get all
2 the RAIs, and I emphasize to the staff that we don't
3 want them because if we ask for all of them, we'll get
4 them and we already have 2,000 pages of things to read
5 through. Good, thanks. We'll hear about that
6 resolution once the open item is closed.
7 Let's see. I'm trying to see -- I'm
8 looking at the DCD figures and trying to relate the
9 valves to this drawing up here. If you -- there's
10 discussions in the DCD about alignment of alternate
11 cooling. For example, let's just take the A and B
12 side of the drawing here.
13 If we're in a configuration with, let's
14 say, B component cooling water pump out of service for
15 maintenance so that A component cooling water pump is
16 supplying all of the loads on the left-hand side here.
17 For some reason A component cooling water
18 pump then fails, there are cross-tied possibilities
19 you've outlined in that green dotted line that allow
20 me to connect from the C&D loop so that I can maintain
21 cooling for the A and B reactor coolant pumps.
22 I understand that. Those are also
23 manually operated valves so the operators would need
24 to open the two supply valves. Right? And open the
25 two return valves and then close the return valve, the

one in the upper left-hand corner of the green box, so that the water goes back to the C/D side and not to the A. You don't pump C/D water over to the A/B surge tanks. There's basically five valves that the operator has to reconfigure to establish that alternate cooling alignment.

In the DCD it talks about the fact that there's a 10-minute available time window to perform those actions after the loss of component cooling water based on overheating of the reactor coolant pump motors.

Is that the most limiting time limit? Because when you disable that cooling, you disable cooling to the motor coolers, the thermal barrier, which is not a big deal because you still have charging flow to the seals. And you disable cooling to the upper and lower bearing oil coolers for the motor upper bearing and the bottom bearing, the radial bearing between the motor and the pump.

Is the motor heating the most limiting time or -- that heats up first? You get into problems with the motor before you get into problems with the bearings? You have analyses that show that is actually your time window is 10 minutes?

MR. CURRY: One moment. Let me check on

1 the analysis. You are correct that in the DCD we talk
2 about 10 minutes. Let us check on what the basis for
3 the 10 minutes is.
4 CHAIR STETKAR: If you're going to do
5 that, check also if there's an analysis to show what
6 is the time. I'm interested in realistic times. I'm
7 not interested in licensing type 10 minutes. I'm
8 trying to understand what the real requirements on the
9 operators might be. One question is what is the time
10 to heat up the motor to unacceptable conditions,
11 whatever those are.
12 The other question is what is the time to
13 heat up the bearing oil system so that the bearing
14 lubrication is affected and you might start to have
15 vibration problems on the reactor coolant pumps? The
16 concern here is if you start to have mechanical
17 vibrations on the pumps, you can mechanically damage
18 the pump seals, or you might be able to mechanically
19 damage the pump seals depending on their clearances
20 and exactly how they're designed.
21 Of course, if you have mechanical damage
22 to the pump seals, we now have a LOCA condition. I'm
23 interested in terms of the analyses to justify the
24 time window for protection of the reactor coolant pump
25 which is this motor protection issue. Actually, more

1 importantly, what is the time window for protection of
2 the pump seals, mechanical damage to the pump seals
3 which is a bearing lubrication issue more than the
4 motor itself.
5 MR. CURRY: There are a couple of issues.
6 Seal cooling, as you pointed out, would continue to be
7 provided by CVCS so we wouldn't operate indefinitely
8 in this configuration because you've lost two trains
9 so we would be in an LCO.
10 CHAIR STETKAR: But the LCO is like 72
11 hours or something like that. I suspect that the
12 bearings might be into trouble before then. I think
13 it's 72 hours. I'm not sure. I may be shooting from
14 the hip but those are typical times for most of the
15 tech specs, I think, on this plant. One train
16 indefinitely and two trains for 72 hours.
17 MR. CURRY: Let us check. We will check.
18 In any event, we wouldn't operate indefinitely. We
19 still have seal injection in this --
20 CHAIR STETKAR: You do but the seal
21 injection doesn't necessarily help you if you're
22 getting mechanical vibrations on the shaft. That is
23 the concern there. There are no automatic trips of
24 the reactor coolant pumps. Is that correct? I think
25 we asked that question once before. I seem to recall

1 that there are not but I might not be remembering this
2 correctly because we look at too many designs.
3 MR. CURRY: One moment.
4 MR. KAWATA: We have only one automatic
5 trip from ECCS actuation.
6 CHAIR STETKAR: Oh, yeah. That's right.
7 I remember that logic.
8 MR. KAWATA: We do not like to trip RCP
9 because we make some --
10 CHAIR STETKAR: Right. Yeah. I remember
11 that part of the logic. There is an ECCS. I can't
12 remember the coincidence logic. I was thinking more
13 in terms of normal -- I know there's over-current and
14 under-voltage and the basic electrical trips but there
15 are no protection trips for the reactor coolant pumps
16 on high lube oil temperature or bearing vibration or
17 motor high temperature or any of those types of trips
18 that I remember. Anyway, if you've got -- the
19 concerns are what are the real available time windows
20 for those operator actions to open those cross ties.
21 MR. CURRY: Right. Just to rephrase your
22 question, really it's the justification for the 10
23 minutes and the basis that we're not going to damage a
24 pump if we are able to get cooling back over.
25 CHAIR STETKAR: That's right.

1 MR. CURRY: Okay.

2 CHAIR STETKAR: But, I mean, there are
3 two. One is the 10 minutes, regardless of the basis,
4 is based on motor cooling which is a motor protection
5 issue. If I start to overheat the motor, I may not
6 necessarily get mechanical damage, you know, to the
7 mechanical vibration.

8 The 10 minute for motor protection, if
9 it's 10 minutes, is protection of the pump itself so
10 that the pump can stay running. The time window that
11 we don't have any information about for overheating of
12 the bearings is also a pump protection issue but, more
13 specifically, it's a LOCA prevention issue. I don't
14 know what that time is. It's probably longer than 10
15 minutes. If it's 11 minutes, it would be interesting.

16 Oh, and this is just confirmation. I
17 think this answer is simple. The signals for I'll
18 call them new, the air-operated isolation valves for
19 the non-safety header, A2, C2, those, I saw a couple
20 of different markups of Interim Rev. 4.

21 It's my understanding that those levels,
22 those valves, are closed by low-low level in the
23 respective surge tank, a containment spray or P
24 signal, or an ECCS actuation S signal. Is that S
25 signal interlocked with loss of off-site power or is

1 it simply the S signal?

2 MR. KAWATA: S means simply ECCS

3 actuation.

4 CHAIR STETKAR: Okay. Because I saw an

5 interim markup. There used to be coincidence logic

6 with an S and under-voltage and this is strictly ECCS.

7 Okay. Good. I was hoping that was true so thank you.

8 Okay. This one is going to be difficult

9 with this drawing but this is all we have. There is a

10 fairly long discussion in the SER and the DCD

11 regarding water hammer. Let me read something just to

12 get it in context. In the SER -- I wasn't going to

13 ask the staff about it, I will later, but I wanted to

14 make sure I understood from the plant perspective what

15 the concern and what the operation was.

16 In the SER, and I'll quote from the --

17 it's SER Section 9.2.2.4 under GDC-4 if you want to go

18 find that section of the SER. It's quite a long quote

19 but I need to kind of paraphrase everything.

20 It says, "Related to possible pressure

21 transients on the plate type heat exchangers over-

22 pressurizations, the typical operating practice when

23 starting and stopping the CCW pumps is as follow: pump

24 discharge valves, NCS, VLV-018A, B, C, D, are first

25 closed.

1 The discharge valves are manually
2 controlled by plant personnel at the valve location.
3 Because of their large size, 24 inches, the rate of
4 closure of a manual discharge valve is not so fast as
5 to cause sudden increase i pressure or pressure
6 differentials in the pump discharge piping. Thus, the
7 potential for water hammer is minimized."
8 Then there's discussions about, you know,
9 the fact the check valves close slowly as flow
10 decreases. The valves in question are not shown on
11 this drawing but, for the benefit of people who don't
12 have the PNIDs pulled up in front of them, they are on
13 the discharge side of the heat exchanger.
14 There is really no discharge valve for
15 the pump. On this drawing they are between the heat
16 exchanger outlet and the connection that goes either
17 to the safety-related loads or the motor-operated
18 valves for the cross ties.
19 Jim, if you could just put -- I know
20 you're looking for the reference section. At this
21 point put your -- just move up to the discharge side
22 of the heat exchanger right there. That's where that
23 valve is. Now, does this mean that every time I shut
24 down a component cooling water pump, an operator has
25 to physically go and slowly manually close that 24-

1 inch valve?

2 MR. CURRY: First thing, Nishio-san or

3 Kawata-san can be very helpful with regard to Japanese

4 experience, but there is no requirement to do that. I

5 think we are talking about Japanese experience.

6 Mr. Nishio.

7 MR. NISHIO: On the Japanese plant,

8 normally such a high -- when operator actuate or start

9 high temperature pump, operator will open -- first he

10 will close the valve and then start up the pump and

11 gradually open the valve. This is not a requirement,

12 just a practice of the Japanese plant.

13 CHAIR STETKAR: This is on pump start-up.

14 When they start the pump manually, they first go close

15 that valve and then start the pump and open it up kind

16 of like you do on the service water pump.

17 MEMBER BLEY: So you don't over-current.

18 CHAIR STETKAR: Yeah, I understand that.

19 But if these pumps are started automatically by a

20 safety signal, those valves are open.

21 MR. NISHIO: This is not a requirement,

22 just a practice.

23 CHAIR STETKAR: Okay. So the discussion

24 -- I got confused because I thought that you were

25 closing those valves to somehow throttle flow as you

1 shut the pump down. Follow me? I was getting
2 confused there. But that's the normal practice that
3 they will be instructed when they start the pump
4 manually to close the valve and then open it manually.
5 All right. The answer to that is yes.
6 Thank you. I think -- let me read the questions that
7 I have here for myself to make sure that -- the way it
8 was written, I had somehow convinced myself that it
9 was a pump shutdown evolution and that bothered me a
10 little bit because it's kind of hard to close those
11 valves under -- it's not good for the valves.
12 It's not good for the operators. I'll
13 ask that staff that, too. Some of these things are
14 more staff-oriented and I just have to show that I
15 have it. I think I'm done with component cooling
16 water. Thank you.
17 Anybody else, by the way? I don't
18 necessarily want to dominate here. Please speak up.
19 Thanks.
20 MR. CURRY: Okay. The next section is
21 non-safety-related system, the Potable and Sanitary
22 Water. We hadn't planned to say much on this one but
23 Mr. Kitamori is here if we have any detailed
24 questions. This is a non-safety-related system. I
25 think the key points are that the system uses check

1 valves to prevent any radioactive contamination from
2 interfacing with the system or any back-flow and then
3 it has no connection to systems containing radioactive
4 material.
5 CHAIR STETKAR: The DCD does mention that
6 the source of the potable water is wells. Does that
7 mean that any COL applicant who is going to implement
8 the design will need to take an exception if they hook
9 up to a normal city water system or some other supply?
10 MR. KITAMORI: Yes, for COL applicant we
11 decide exception.
12 CHAIR STETKAR: Okay. I just wanted to
13 make sure that was the case. A lot of plants don't
14 have wells for these things. Most of them don't.
15 MR. CURRY: Okay. We will move on to
16 9.2.5 if there are no additional questions on 9.2.4.
17 Ultimate heat sink is conceptual design information,
18 although we have interface requirements. The ultimate
19 heat sink is typical in that it dissipates heat from
20 the ESWS.
21 We comply with the requirements of Reg.
22 Guide 1.27 with regards to capacity. Seismic Category
23 I structure and designed to withstand conditions
24 defined in Chapter 2.
25 The ultimate heat sink consist of four

1 50-percent capacity mechanical draft cooling towers.
2 Again, this is conceptual design information but this
3 is what we have in the DCD. So four 50-percent
4 capacity mechanical draft cooling towers, one
5 associated with each ESWS train and three one-third
6 capacity basins.
7 MEMBER BROWN: You said three 30-percent
8 basins?
9 MR. CURRY: Thirty-three and a third. I
10 could have said 30.
11 MEMBER BROWN: That's fine. You didn't.
12 CHAIR STETKAR: Jim, I came across --
13 it's in the DCD and it's in the SER. You missed it in
14 other designs but there are statements that say
15 essentially that the capacity of the ultimate heat
16 sink should be sufficient for 30 days of cooling
17 without makeup. This says, "Or a minimum of 36 days
18 for cooling pond."
19 Why are there different requirements if I
20 have something that I'll call an ultimate heat sink
21 which might look like what's inside the dotted lines
22 on this drawing? That has to have a 30-day capacity.
23 Or if I have something that's called a cool pond that
24 might look different but other people would call an
25 ultimate heat sink, that has to be 36 days.

1 MR. CURRY: Mr. Chairman, that's from the
2 Reg. Guide maybe. I'm not sure if anyone --
3 CHAIR STETKAR: I'll ask the staff then.
4 That's fine. I was just curious whether you had any
5 insights because it is stated in the DCD so,
6 therefore, if I build my plant with a cooling bond, I
7 have to make sure whatever I call a cooling -- I want
8 to make sure we're not getting into semantics and that
9 there's an actual technical basis for this because
10 I've seen many people designate concrete ponds as an
11 ultimate heat sink. It doesn't necessarily have to
12 have cooling towers and look like what's in this
13 dotted box here. I'll ask the staff about that.
14 Thank you.
15 MEMBER BROWN: One -- just to pick on
16 your diagram, you said three basins. Yet, your
17 diagram say there's an A ultimate heat sink basin and
18 little diagram on the left says to/from B, C and D
19 which implies there are four heat sink basins. Which
20 is it?
21 CHAIR STETKAR: I was a bit surprised you
22 said three also because I thought I'd seen four. The
23 conceptual drawing figure 9.2.5-1 in the DCD seems to
24 show four.
25 MR. CURRY: Four 33 and a third percent

capacity basins. Right?

CHAIR STETKAR: I don't know what the capacities are. I'm just looking at a drawing.

MR. CURRY: Four 33 and a third. Thank you, sir.

CHAIR STETKAR: Ah, okay.

MR. CURRY: Right.

CHAIR STETKAR: Each has enough water in it for a third of the design basis. Ah, okay. Physically there are four separated basins. Okay. Thank you. One for Brown.

Anybody have anything more on the ultimate heat sink? Again, this is all going to be COL so we'll visit this in detail depending on whatever specific design the COL applicant proposes.

MR. CURRY: All right. Condensate Storage Facilities, also a non-safety-related system. Mr. Hattori-san is here to help us with that. Really three -- all non-safety related but three subsections; demin water, condensate storage and transfer, and primary makeup water system.

I think it's outlined here starting from the raw water supply. The demin water treatment plant is a COL item. Then the demin water storage tank provides makeup to the condensate storage tank, the

1 two primary water tanks as well. Then off to turbine
2 island users or nuclear island users.
3 CHAIR STETKAR: All four of those tanks,
4 the two primary water makeup tanks, the CST and the
5 demineralized water storage tank, are all outside in
6 the yard. Is that correct?
7 MR. KITAMORI: Primary makeup tank is
8 inside of the tank house.
9 CHAIR STETKAR: Tank house?
10 MR. KITAMORI: Yes. In that tank house
11 we have the primary makeup water tank and RWST.
12 CHAIR STETKAR: Ah, okay. That primary
13 water tank house is a separate building from obviously
14 the reactor building and the auxiliary building?
15 MR. KITAMORI: Located outside of the
16 reactor building.
17 CHAIR STETKAR: Okay. I guess -- uh,
18 okay. I had a question here but I need to kind of
19 rethink how to ask it. There is a statement that says
20 the piping to and from -- this is in the DCD section
21 on the condensate storage facilities. It's 9.2.6.2.6.
22 The statement says, "The piping to and
23 from the primary makeup water tank is a single wall
24 stainless piping designed to run above ground and
25 penetrates the building wall directly into the tank.

1 This piping is mostly inside the auxiliary building in
2 pipe chases. For piping between buildings,
3 penetration sleeves are provided to collect and direct
4 any leakages back into the building for further
5 processing."
6 Since we are now talking about piping
7 that goes between two different buildings, are the
8 buildings next to one another or is there open space?
9 I didn't look at the footprint of the plant layout to
10 see where these buildings are, quite honestly, because
11 I didn't have time.
12 MR. HATTORI: Hattori speaking. The
13 condensate storage tank and the turbine building are
14 separated.
15 CHAIR STETKAR: Yes. I'm talking in
16 particular about the primary makeup water tanks.
17 Where I'm going to is collection of radioactive
18 leakages and how they are taken care of. There is
19 quite a bit of discussion about condensate storage
20 tank and demineralized water storage tank. Those are
21 not likely to contain any radioactive fluids.
22 The primary makeup water tank may. It
23 receives return flow from boric acid evaporators, at
24 least, and other potentially radioactive users. We
25 don't necessarily know that the primary makeup water

1 tank is by definition clean water the same way as the
2 demineralized water tank or the condensate storage
3 tank.
4 So because this is non-safety related
5 equipment with regard to collection and control of
6 potentially radioactive fluid releases to the outside
7 environment is why I'm asking about these piping
8 sections because that's where this whole discussion
9 evolved from the SER.
10 What I would like to understand is how
11 that piping from -- between the primary water makeup
12 building and whatever other buildings those pipes go
13 into whether that's double-wall piping, whether it's
14 single-wall piping, and what provisions there are for
15 collection of potential leakage from that piping.
16 There are some discussions about -- it
17 says there are sleeves from buildings that collect
18 water and put it back into places where it goes into a
19 radioactive sump. I'm not sure how that works in this
20 particular configuration.
21 MR. NISHIO: Hiroki Nishio. Sometimes in
22 the primary makeup water is located next to that
23 auxiliary building.
24 CHAIR STETKAR: Oh, okay.
25 MR. NISHIO: The sleeve is a double pipe.

1 CHAIR STETKAR: Thank you. Good enough.
2 Thanks.
3 MR. CURRY: So if there are no questions,
4 may I proceed to 9.2.7?
5 CHAIR STETKAR: Any other questions?
6 MR. CURRY: 9.2.7. Chilled Water System.
7 Mr. Hotchkiss is also our system expert on that.
8 Basically the definition includes essential chilled
9 water and non-essential chilled water. You see the
10 loads that the chilled water system and we'll talk
11 about non-essential chilled water systems shortly.
12 You see the chilled water system loads
13 listed up there and also in the following slide, if
14 you wish to look at it. The system, again, is for 50-
15 percent capacity chiller units in four trains. I
16 think those are the key points of that system.
17 CHAIR STETKAR: Couple questions on
18 essential chilled water. This is beyond design basis
19 accident but it's addressed in the DCD so it's fair
20 game. In Interim Rev. 4, Section 9.2.7.2.1 it says
21 that during loss of off-site power each of the
22 essential chilled water systems is powered from
23 respective safety emergency power source.
24 The essential filler units stop for one
25 hour after a station blackout occurs until the

1 alternate ac gas turbine generator restores power.
2 We've reviewed Chapter 8 so we are familiar with the
3 alternate ac gas turbines and how they're configured.
4 My question was I understand the
5 licensing connotation of the one hour to restore power
6 from the alternate ac gas turbine. Fortunately the
7 ACRS doesn't necessarily have to think in those
8 licensing terms. We like to understand how the plants
9 work.
10 The question I had, the essential chilled
11 water system cools several loads and I have questions
12 about a couple loads later. One of the loads it cools
13 are the air-handling units for the turbine-driven
14 emergency feedwater pumps rooms. Those are trains A
15 and D of the emergency feedwater system.
16 I was curious, and I would like to know,
17 if I stop ventilation cooling for those rooms for one
18 hour, what would be the temperature in that room at
19 the end of that one-hour period? That's a room heat-
20 up calc. The second part of that question is what is
21 the most limiting qualification temperature for any of
22 the components in that room?
23 In particular I'd be concerned about
24 possible electronic governors for the turbine or any
25 instrumentation. Or if you have any digital

1 processing local units in there for instrumentation
2 for control signals, what are their design
3 qualification temperatures? The question is, you
4 know, do we exceed those temperatures under this
5 nominal one-hour period?
6 MR. CURRY: I think we got a similar
7 question from the Chapter 8 Subcommittee.
8 CHAIR STETKAR: Yeah. Unfortunately I
9 didn't have time to go back and see that. It sounded
10 familiar but I thought I'd ask it again here. If you
11 did go back and look it up, I don't recall getting an
12 answer on that. I'm not sure.
13 MR. CURRY: Well, actually, I think it's
14 going to be the subject of an audit but we do have a
15 room heat-up calculation.
16 CHAIR STETKAR: Okay.
17 MR. CURRY: And I believe, Kevin Lynn,
18 you may be able to help us out but I think it's going
19 to be the subject of an audit with the staff. Do you
20 have a scheduled date on that?
21 MR. LYNN: Yes, this is Kevin Lynn, MNES.
22 There is going to be an audit under Chapter 8 for an
23 RAI that is related to the turbine-driven EFW pump and
24 room heat-up calculation. MHI is currently preparing
25 the calculation results and we've gotten some feedback

1 from the staff on what specific items they want to
2 see.
3 We are revising the calculation to make
4 sure we address each of those items with the date of
5 being able to complete that by the end of March and
6 then the audit would most likely be sometime in April
7 but it's not officially scheduled at this time.
8 CHAIR STETKAR: Okay. That's good. As
9 long as I know the staff is tracking it. I apologize,
10 I didn't have time. I thought it sounded familiar
11 with we look at so many different plants and I tend to
12 ask similar questions for each plant and I get lost.
13 I apologize for the repetition.
14 MR. CURRY: No apology necessary.
15 CHAIR STETKAR: There is a table in the
16 DCD and it's Table 9.2.7-2 that lists -- what it does
17 is it lists the flow rates and heat loads under normal
18 and abnormal operation for the essential chill water
19 system. I think I understand most of this but I had a
20 question that the -- this is probably just because I'm
21 not familiar enough with the plant.
22 The heat load for the A and D (dog)
23 emergency feedwater pump area air-handling units,
24 those are the turbine-driven emergency feedwater pump
25 rooms, are 62,000 BTUs per hour. I understand there

1 is heat load during normal operation because you have
2 a steamline in that room, but the same heat load
3 applies under abnormal operation when we actually have
4 steam flowing through the turbine and we're heating up
5 all of the turbine components and things.
6 Is that correct? Am I misunderstanding
7 the sources of that heat load? The question is why
8 are they the same during normal and abnormal
9 operation? I understand why there's normally a heat
10 load there of some amount.
11 MR. CURRY: And just to confirm, we're
12 talking about 60, right?
13 CHAIR STETKAR: Mine says 62 because I'm
14 looking at Interim Rev. 4 of the DCD.
15 MR. CURRY: Okay. Fine.
16 CHAIR STETKAR: I was politely instructed
17 to look at that and not at Rev. 3. In Rev. 4 the 60
18 is crossed out and a new value of 62 is inserted.
19 MR. CURRY: Thank you, sir. We're on the
20 same page.
21 CHAIR STETKAR: But it is 62 under both
22 normal and abnormal. My basic question is why are
23 they the same. Why isn't -- I don't know what basis
24 went into determining that 62,000 BTUs per hour.
25 MR. KITAMORI: This is Kitamori speaking.

1 Heat load in the worst-case condition so actually
2 during normal operation if different heat load
3 abnormal condition. But to determine chill water unit
4 capacity, we considered the worst condition
5 achievable.
6 CHAIR STETKAR: So are you saying -- so I
7 understand, does that mean that the 62,000 is the
8 actual heat load when the turbine-driven pump is
9 operating under whatever assumptions you made about,
10 you know, conductive heat removal or whatever, so that
11 during normal operation the real heat load would be
12 less than 62?
13 MR. KITAMORI: Yes.
14 CHAIR STETKAR: Okay. Thanks. I
15 understand that.
16 MEMBER ABDEL-KHALIK: Is that right? So
17 if you have the chilled water system operating versus
18 the case of a station blackout, you expect the heat
19 load in the room to be smaller?
20 MR. HOTCHKISS: This is Marc Hotchkiss.
21 I think what we're saying is we just assumed that this
22 accident heat load for normal and accident conditions
23 decides the chiller. In effect, under a normal
24 condition, the heat load may be smaller. It probably
25 would be smaller if we were not operating the

1 emergency feedwater pump.

2 MEMBER ABDEL-KHALIK: Right.

3 MR. HOTCHKISS: But assume that under

4 normal conditions decides the chiller so there's

5 excess capacity essentially.

6 MEMBER ABDEL-KHALIK: No, but the

7 question is if the pumps are operating and the chiller

8 is operating, what is the heat load? That is the

9 maximum heat load.

10 MR. HOTCHKISS: The pump -- the steam-

11 driven emergency feedwater pump is the source of the

12 heat load.

13 MEMBER ABDEL-KHALIK: Correct. But if

14 the chiller is operating, that means the temperature

15 in the room is at its lowest value which means heat

16 losses from the system are at their highest value so

17 that gives you the highest heat load on which you base

18 the sizing of the system. The question is is that the

19 same heat load you're assuming during the station

20 blackout when the chiller is not operating?

21 MR. HOTCHKISS: The chiller operates on a

22 station blackout after one hour after ac gas turbine

23 generator starts.

24 MEMBER ABDEL-KHALIK: No, during that

25 room heat-up period.

1 MR. HOTCHKISS: Well, there is no heat
2 removal taking place during that one hour because the
3 chiller's not operating if I'm understanding your
4 question. After an hour we load the chiller back onto
5 the electrical bus, start the chiller again and start
6 cooling the room back down to an equilibrium value.
7 These are equilibrium head load values accident
8 conditions.
9 MEMBER ABDEL-KHALIK: Maybe I should ask
10 the question, the 62,000 BTU per hour heat load
11 calculation, what room temperature is assumed in that
12 calculation?
13 MR. HOTCHKISS: It assumes to be the
14 normal temperature range which for that room is 50 to
15 105 degrees. We would take the worst-case temperature
16 condition to maximize the heat load and make sure --
17 MEMBER ABDEL-KHALIK: Which is the lowest
18 temperature?
19 MR. HOTCHKISS: Yes.
20 MEMBER ABDEL-KHALIK: All right.
21 CHAIR STETKAR: One other question I had
22 on that same table, if you have it in front of you.
23 The motor-driven emergency feedwater pump areas, which
24 are B and C, do not show the heat load during normal
25 operation which I understand because they are motor-

1 driven pumps.

2 During abnormal operation those areas

3 showed heat load of 110,000 BTUs per hour which is not

4 quite but almost twice the heat load in the turbine-

5 driven emergency feedwater pump room. I was curious

6 why the emergency feedwater pump rooms have a much

7 higher heat load than the turbine-driven emergency

8 feedwater pump rooms.

9 I've been around motors and turbines and

10 it strikes me that rooms that have turbines in them

11 are usually a lot warmer, unless the motor-winding

12 resistance of these motors is really high. You may

13 want to go back and check that if you don't have a

14 quick answer. My problem is I have no absolute feel

15 for any of these heat loads so the only thing I can do

16 is look at relative values.

17 MR. CURRY: We'll take that as an item.

18 CHAIR STETKAR: I mean, I don't

19 understand the reasons for that relative difference.

20 MEMBER ABDEL-KHALIK: Does the turbine-

21 driven emergency feedwater pump room have a door?

22 MR. NISHIO: Yes, of course.

23 MEMBER ABDEL-KHALIK: It does have a

24 door? Does the heat load calculation assume the door

25 is open or closed?

1 MR. NISHIO: Closed.

2 MEMBER ABDEL-KHALIK: Assumes the door

3 closed and you still get 62,000 BTUs per hour. Okay.

4 CHAIR STETKAR: I guess what we're asking

5 is what justification there are for both of those

6 values, both the 62 and -- I understand why the same

7 value is being used in the turbine driven during

8 normal operations. I'm happy with the fact that those

9 two numbers are the same but I guess we would like

10 justification for the basis for the 62 and the 110 so

11 we understand why the difference and understand --

12 MR. CURRY: You're surprised the

13 electrical --

14 CHAIR STETKAR: I'm surprised the

15 electric is much higher than the turbine which brings

16 into question what assumptions were made regarding the

17 analyses for both of those rooms. The question is is

18 the electric somehow really conservatively estimated

19 by a different set of assumptions or in principle

20 could the turbine driven heat load be optimistically

21 estimated through a different set of assumptions

22 because it just doesn't feel right.

23 MR. CURRY: We'll have to look at the

24 calculations.

25 MEMBER ABDEL-KHALIK: I'm actually

1 surprised by the 62,000 BTUs per hour number.

2 MR. CURRY: You think it's high?

3 MEMBER ABDEL-KHALIK: It's low.

4 MR. CURRY: It's low. Okay. We'll look

5 at the calculation and get back to the Committee.

6 CHAIR STETKAR: Thank you. And I have to

7 ask a question that is probably a very stupid question

8 and it will show you that I perhaps didn't spend as

9 much time with the normal ventilation systems as I

10 should have. There are several areas that are

11 supplied by the essential trobe water system that do,

12 indeed, have heat loads under normal plant operation;

13 component cooling water area, the essential chilled

14 water area, charging pumps, spent fuel pit.

15 Are those normally supplied by different

16 ventilation systems and that's why there's no normal

17 heat load shown in those areas? As I said, I have to

18 apologize because I just didn't have a chance to do

19 that kind of cross correlation. Do you follow my

20 question? Those areas have normally operating

21 equipment.

22 At any given time two of the component

23 cooling water pumps will be running. I don't know

24 whether they're -- it's either A or B and either C or

25 D will be running. At any given time two of those

1 rooms actually during normal operation will have a
2 heat load. Yet, during normal operation there is no
3 heat load shown on the essential chilled water system
4 for those rooms, or any of the other; the charging
5 pump rooms, spent fuel pit cooling pump rooms, annulus
6 penetration, the penetration areas. The pipes don't
7 know.
8 MR. HOTCHKISS: Mr. Chairman, this is
9 Marc Hotchkiss. You are correct. They are supplied
10 by normal auxiliary ventilation system normally.
11 CHAIR STETKAR: Thank you.
12 MR. HOTCHKISS: And then switch over to
13 the emergency.
14 CHAIR STETKAR: Okay. Thanks. I
15 apologize. I just didn't have a chance to cross-
16 correlate that. Thank you.
17 MEMBER ABDEL-KHALIK: Experience in
18 Japanese plants, do you ever have leaks in the
19 turbine-driven aux feedwater pump rooms? Steam leaks?
20 MR. CURRY: So your question is Japanese
21 experience.
22 MEMBER ABDEL-KHALIK: Right. During
23 testing.
24 MR. CURRY: During testing.
25 MEMBER ABDEL-KHALIK: Right.

1 MR. CURRY: Turbine-driven feedwater
2 pump.
3 MR. NISHIO: I have to -- we have to --
4 we did not hear of this. Some turbine-driven pump
5 leak but we did not hear such a big steam leak.
6 MEMBER ABDEL-KHALIK: I'm wondering how
7 much margin there is in that 62,000 BTU per hour
8 calculated heat load.
9 MR. CURRY: I think if we look at the
10 calculation and get you some more detail, it may
11 answer a lot of questions. We'll be looking at that
12 heat load calculation.
13 MEMBER ABDEL-KHALIK: Thank you.
14 MR. CURRY: Mr. Chairman, I was thinking
15 of going to the non-essential chilled water system.
16 CHAIR STETKAR: That is an excellent
17 thought.
18 MR. CURRY: All right, non-safety system
19 with the exception of the containment isolation
20 function. I think, once again, you have kind of a
21 detailed or simplified schematic of the loads.
22 I think maybe the point of interest to
23 the Committee might be the last bullet here for severe
24 accidents we have the capability to connect the non-
25 essential system to this component cooling water

1 system to provide alternate cooling to the charging
2 pumps and component cooling water system can also
3 supply cooling water to the fan coolers.
4 CHAIR STETKAR: Jim, I want to ask about
5 that connection. I have a couple of questions about
6 it. First, in general, you don't have -- you do. If
7 you pull up -- that doesn't help. One of the loads
8 off the non-essential chilled water system are the --
9 I'm looking for what it's called here.
10 The main steam and feedwater piping area
11 air handling units, do those -- I think I know the
12 answer but I want to make sure I understand the plant
13 layout. Are the areas that are cooled by those air
14 handling units, do those areas contain the main steam
15 isolation valves, main feedwater isolation valves,
16 main steam depressurization valves, and main steam
17 relief valves? Is that the section of the piping
18 area?
19 MR. CURRY: Yes, that's correct.
20 CHAIR STETKAR: Okay. So if I lose
21 ventilation in there, do you have any idea how those
22 pieces of equipment respond? The main steam isolation
23 valves and the feedwater isolation valves, if I
24 remember right, are -- I don't remember if they are
25 pneumatically or hydraulically operated valves but the

1 point is they are not motor-operated valves.

2 The main steam depressurizations valves

3 are motor-operated valves. The main steam relief

4 valves are air-operated valves that fail in a closed

5 position. I was curious about whether loss of

6 ventilation for that area would have an affect on

7 operation of any or all of those valves? In

8 particular, you know, would they fail in specific

9 positions?

10 Would motor operators or other

11 instrumentation be disabled that could affect any of

12 the safety-related functions from any of those

13 components? I think the main steam relief valves are

14 not safety related but the main steam depressurization

15 valves are, if I recall.

16 MR. KAWATA: These are qualified in the

17 main steam line break condition.

18 CHAIR STETKAR: Okay. They are qualified

19 under main steam line break. Okay. Correct answer.

20 Thank you.

21 Now, on the -- you don't have a drawing

22 for the non-essential chilled water system, do you?

23 Yes, you do. I'm sorry. The connections -- it's

24 doesn't show on this one. Down in the lower left-hand

25 corner of this drawing shows the connections between

1 non-essential chilled water and component cooling
2 water, those two little arrows that come in and out.
3 Unfortunately, this drawing you need to
4 look at the component cooling water PNID and this
5 drawing at the same time to understand my question.
6 The SER says that the connection between the component
7 cooling water system, and this is -- it comes from
8 component cooling water system Header C1 so it's off
9 that Header C1.
10 The design of this, as I understand it,
11 is you can either supply component cooling water to
12 the containment fan coolers, or you can supply non-
13 essential chilled water back over to the charging
14 pumps. It's a bi-directional sort of flow
15 possibility.
16 In the SER it says that connection,
17 because this is non-safety related piping, is -- what
18 it says is, "There are redundant normally closed
19 motor-operated valves to isolate the systems." I
20 could find only one normally closed motor-operated
21 valve on each of the supply and the -- it's bad to
22 call it supply and return but in each of the lines
23 between component cooling water and non-essential
24 chilled water.
25 In other words, there is only one

1 normally closed valve between Header C1 and what is
2 shown as an in-going arrow here from CCW, and only one
3 normally closed motor-operated valve on what is shown
4 as outgoing. I wasn't sure whether I was missing
5 something or whether I'm misinterpreting the
6 connotation of redundant normally closed motor-
7 operated valves. To me that normally means two valves
8 in series.
9 MR. CURRY: Right. We don't think you're
10 misinterpreting. Kawata-san -- I don't know, Mr.
11 Chairman, if you have Figure 9.2.2-1.
12 CHAIR STETKAR: Oh, yes, I do. 9.2.2-1?
13 MR. CURRY: Yes, sir.
14 CHAIR STETKAR: I have it. Finding it is
15 something else. I do and it's Sheet 5. I'm sorry,
16 Sheet 6. Is it 6? Sheet 5 according to my notes.
17 MR. CURRY: And we're looking at the
18 living --
19 CHAIR STETKAR: We're looking at Interim
20 Rev. -- I'm looking at Interim Rev. 4, Sheet 5 with
21 9.2.2-1 down in the lower left-hand corner of that
22 sheet.
23 MR. CURRY: We're looking at Sheet 6.
24 CHAIR STETKAR: Six?
25 MR. CURRY: The valves we're looking at

1 are MOV-322A, 321A.

2 CHAIR STETKAR: No, those are the wrong

3 valves. You're looking at the wrong valves. That's

4 from the fire protection system.

5 MR. CURRY: Okay. Well, I'm sorry. I

6 apologize. You are looking at the connection, yes.

7 Yes. You're looking at the connection. What

8 connection are you looking at? I thought I understood

9 the way this worked and now I don't understand the way

10 it works because I didn't look at Sheet 6.

11 I thought that the only connection was on

12 Sheet 5 down in the lower left-hand corner. In other

13 words, I'm trying to understand where these two single

14 arrows on this drawing connect in the real world.

15 I thought they connected on Sheet 5 in

16 the lower left-hand corner and that the flow from non-

17 essential chilled water to the charging pumps came

18 through these valves back up through the header and

19 over to the charging pumps and I didn't look at Sheet

20 6 which shows another connection that says non-

21 essential chilled water. Now I'm even more confused

22 because -- I'm just confused.

23 MR. CURRY: One moment. We're checking.

24 MEMBER BLEY: You need to pick one.

25 CHAIR STETKAR: That's why I said you

1 kind of need to look at both. I'm finding I needed to
2 look at more drawings at the same time because I
3 thought I knew how it worked and I was apparently
4 wrong.
5 MR. WHEELER: This is Larry Wheeler from
6 the staff. The Interim Rev., I think, has some
7 Chapter 19 figures that might show that information on
8 it a little clearer so that's something you can take a
9 look at.
10 CHAIR STETKAR: I didn't even think of
11 looking there. Thank you. Why would the PRA have
12 anything useful in it? If anybody happens to know the
13 number of that figure, it might help. There it is.
14 MR. CURRY: Do you have an electronic
15 copy, Mr. Chairman, or just a paper copy?
16 CHAIR STETKAR: Of which? Yes. The
17 answer is yes. I have electronic. If you can just
18 point me to which drawing.
19 MR. CURRY: Right. Okay.
20 CHAIR STETKAR: If that Chapter -- I'm
21 look at, I think, the -- there is a figure in Chapter
22 9 that is 19.1-2, Sheet 34. I'm not sure if that is
23 the one I should be looking at. It's entitled
24 Simplified System Diagram: Alternate Component Cooling
25 by Non-Essential Chilled Water System which may or may

1 not -- yeah.

2 I was going to say which may or may --

3 it's got a nice sounding title but I'm having

4 difficulty understanding what it's trying to tell me.

5 What I was going to suggest -- quickly I'm not

6 learning anything from this that's going to help me.

7 Let's leave this.

8 In the interest of time maybe you can

9 help me understand. Even sketches on a piece of paper

10 or some drawing that might show all of the valves. I

11 admit I didn't look at Sheet 6, 9.2.2-1, but, quite

12 honestly, that's only confusing me a little bit more

13 because I thought I understood how it worked just

14 looking on Sheet 5.

15 Just looking on Sheet 5 I could -- the

16 concern I originally had is looking at Sheet 5 if I

17 broke the piping on the drawing that you have here in

18 front of me, I could only find one isolation valve to

19 isolate the CCW header from that break.

20 MR. CURRY: You're talking about right

21 where I'm pointing. You're talking about a break

22 there.

23 CHAIR STETKAR: Exactly.

24 MR. CURRY: Okay.

25 CHAIR STETKAR: As I said, in the SER

1 it's characterized as that interface, whatever it is,
2 is isolated by redundant normally closed MOV.
3 MR. HAMAMOTO: This is Hiroshi Hamamoto.
4 The interconnection line between the CCW and non-
5 essential chilled water system has two connections.
6 One is cooling tower for non-essential. Two is
7 charging pump. Connection is between cooling tower to
8 charging pump. Charging pump, cooling line is safety.
9 9.2.2-1, Sheet 6 is between safety and
10 non-safety. The valve is double isolation. The
11 other, Chapter 5, is a connection between CCW to the
12 containment cooling -- cooling pump. That is a
13 connection between the non-safety. That line is
14 containment non-safety line to non-safety containment
15 cooling. Isolation valve is only one.
16 CHAIR STETKAR: Thank you. I'm starting
17 to understand it. I see now if I look at DCD Figure
18 9.2.7-2, Sheet No. 3, and Figure 9.2.2-1, Sheet No. 6,
19 I at least see where I misinterpreted how I can get
20 non-essential chilled water to the charging pumps so
21 that the line on Sheet 6 of 9.2.2-1 connected to lines
22 that are shown on 9.2.7-2, Sheet 3, and those lines,
23 indeed contain two normally closed motor-operated
24 valves.
25 I've isolated the non-essential stuff on

1 the -- I'm sorry, the non-safety things on Sheet 3 of
2 the non-essential from the safety related that's shown
3 on the component cooling water. I see where that is.
4 Now, what I -- because I was looking at
5 drawings I didn't quite understand the second part
6 because this -- is the piping that's shown on this
7 drawing seismically qualified? If it is, where is it
8 seismically qualified? Because the way to supply
9 component cooling water now to the fan coolers, that
10 connection is shown on Sheet 5 of 9.2.2-1.
11 MR. HAMAMOTO: Sheet 5?
12 CHAIR STETKAR: Sheet 5.
13 MR. HAMAMOTO: Cooling containment.
14 CHAIR STETKAR: That only has one.
15 MR. HAMAMOTO: Yes. This chilled water
16 system is non-essential. Non-essential means non-
17 safety-related. Also this is connection to non-safety
18 related CCW line so that we don't need double
19 isolation.
20 CHAIR STETKAR: Okay. The reason -- this
21 may be something I need to ask the staff for
22 clarification, but in the SER there are a couple of
23 statements regarding connections and there is a reason
24 I'm confused. One says the non-ECWS includes a
25 connection to the CCWS to allow chilled water use as

1 alternate cooling for the charging pumps in the event
2 of the failure of CCWS during severe accident
3 conditions.
4 As indicated in Section 9.2.2 of the DCD,
5 at the boundary of the non-ECWS and CCWS there are
6 redundant normally closed motor-operated valves to
7 isolate the system and those I now understand where
8 they are. I got that.
9 It's also noted, though, that in addition
10 the CCWS can be used as an alternative supply of
11 cooling water to the containment fan coolers of the
12 non-ECWS in the event of a severe accident. In order
13 to provide isolation between the seismic Category I
14 CCWS and the non-seismic non-ECWS two locked closed
15 valves are provided as indicated in Section 9.2.2.2 of
16 the DCD. Therefore, CCW system integrity and
17 operability is assured by these isolation valves.
18 Now, given the fact that I'm slowly
19 starting to understand these interconnections, my
20 question now is the two locked closed valves that are
21 mentioned in the SER, are those the two normally
22 closed motor-operated valves that appear on Figure
23 9.2.2-1, Sheet 5, of the DCD in the lower left-hand
24 corner?
25 MR. CURRY: Mr. Chairman, can you just

1 give us the SER page reference?

2 CHAIR STETKAR: Yes, I can. Page

3 reference, unfortunately, if you look for SER Section

4 9.2.7.4.1 under GDC2.

5 MEMBER SHACK: Bill. 118.

6 CHAIR STETKAR: I was going to say Bill

7 can find the page number quicker than I can.

8 MR. CURRY: Okay. Maybe we should look

9 at these diagrams but that's the statement that we're

10 trying to --

11 CHAIR STETKAR: I was trying to resolve

12 these two statements. The first one I now understand

13 because I was misunderstanding where that connection

14 was from non-ECWS to the charging pumps in particular.

15 I was getting flow in a different direction. That one

16 I'm happy with. I understand that. The one that I am

17 concerned -- questioning now is the second one that

18 cites two locked closed valves.

19 MR. CURRY: From CCWS to the fan coolers.

20 CHAIR STETKAR: In particular, this

21 supply that's shown on this drawing here from CCWS to

22 the fan cooler which I now understand is a different

23 connection. I'm trying to understand the subtleties

24 of what two locked closed valves mean in the

25 connotation of a break somewhere in this piping

1 system.

2 MR. CURRY: Okay. So, just to repeat, we

3 are looking for the two locked closed valves in CCWS

4 to the fan coolers.

5 CHAIR STETKAR: Yes.

6 MR. CURRY: And we have an SER reference.

7 CHAIR STETKAR: There is an SER

8 reference.

9 MR. CURRY: Thanks.

10 CHAIR STETKAR: Yes. That's all I have

11 on non-ECWS. Thanks for your patience. That's one of

12 the reasons why -- the fortunate thing is we do have

13 enough time. As I said, sometimes it takes a while to

14 get the questions sorted out. It's useful to have

15 time so you can look up references. Thank you.

16 MR. CURRY: Absolutely. All right. I

17 think we're on 9.2.8, Turbine Component Cooling Water

18 System. It's a non-safety system and simply provides

19 cooling water to various turbine loads. You see the

20 three heat exchangers there at 50 percent capacity, as

21 are the pumps.

22 That system is serviced by the non-

23 essential service water system. The non-essential

24 service water system provides cooling water to the

25 turbine cooling water system. It's a once-through

1 system discharging -- taking in-take water and
2 discharging to the circ water system connections.
3 Just to avoid any confusion for those of
4 you who have this piece on your slide, that is some
5 kind of a ghost. I don't know why that's there but it
6 shouldn't be there.
7 CHAIR STETKAR: It's just other pumps.
8 MR. CURRY: I thought we got rid of
9 those.
10 So that concludes what we had planned to
11 say on 9.2.
12 CHAIR STETKAR: We are exhausted so we're
13 going to take a break for lunch now. We're doing
14 pretty well on time so I'm going to be really
15 generous. We'll reconvene at 1:00. We are recessed
16 for lunch.
17 (Whereupon, at 11:49 a.m. off the record
18 for lunch to reconvene at 1:02 p.m.)
19
20
21
22
23
24
25

1
2
3
4
5
6
7
8
9
10
11
12
13
14
15
16 A-F-T-E-R-N-O-O-N S-E-S-S-I-O-N
17 1:02 p.m.
18 CHAIR STETKAR: We're back in session.
19 MR. CURRY: Mr. Chairman, I think we left
20 off of 9.2. We plan to start with 9.3.
21 CHAIR STETKAR: Yes.
22 MR. CURRY: Our Holtec consultants, Mr.
23 Bullard, Mr. Brickner and Mr. Fitzpatrick will have to
24 leave soon, but we do have an answer to the questions
25 you asked this morning about Metamic.

1 CHAIR STETKAR: Good. Jim, thanks. You
2 reminded me of something. We will plan to adjourn
3 today at around 5:00. I mean, it depends on when we
4 come to a stopping point. We will plan to come back
5 tomorrow. I don't think necessarily we can cover all
6 of the material today, and coming back tomorrow will
7 also give you folks an opportunity, perhaps, to also
8 do some more research tonight if that's necessary to
9 answer some of the other questions.
10 So, for just administrative purposes,
11 plan that we'll end around 5:00. It might be a little
12 more, it might be a little later. We probably will not
13 go to 5:30 today, and we should plan to come back
14 tomorrow morning. But that doesn't change what you're
15 going to say now.
16 MR. CURRY: No, and that's helpful in
17 planning.
18 CHAIR STETKAR: But it's just for
19 everyone's planning.
20 MR. CURRY: That's helpful. It also will
21 be helpful if we can at least get through the
22 presentation so we know what the Committee's questions
23 are.
24 CHAIR STETKAR: Absolutely. We'll
25 certainly shoot to do that. I don't know whether we'll

1 finish, you know all of the staff's presentations by
2 the end of this afternoon.
3 MR. CURRY: Okay.
4 CHAIR STETKAR: But certainly we'll get
5 through yours.
6 MR. CURRY: That would be great.
7 MR. HAMZEHEE: We don't plan to talk too
8 much.
9 CHAIR STETKAR: You don't plan to talk
10 too much.
11 MR. HAMZEHEE: No.
12 CHAIR STETKAR: Okay.
13 MEMBER SHACK: The best laid plans of
14 mice and men.
15 CHAIR STETKAR: Then make sure you have
16 sharp pencils so you take notes.
17 MR. CURRY: Okay. So, where we left off
18 this morning with the criticality, there was a
19 Committee question regarding the anodized Metamic and
20 the borated water and the potential pH associated with
21 it. And so I think Mr. Bullard and Mr. Brickner have
22 some information for us.
23 MR. BULLARD: Yes. Thanks, Jim.
24 I did want to confirm, I spoke with
25 colleagues at our office. The Metamic material as

1 fabricated and as installed in the racks is in the
2 unanodized condition. And that is typical of Holtec-
3 designed spent fuel racks installed at many nuclear
4 power plants. So while it is not analyzed, it is not a
5 first of a kind installation or application of that
6 material.
7 And we will provide to MHI the ADAMS
8 accession number so that you can review the topical
9 report to find out more information about the
10 material.
11 I think Bret is going to add more
12 information with regard to the pH.
13 MR. BRICKNER: There was a question
14 related to the soluble boron concentration and the pH,
15 and while we don't report pH inside the boron
16 concentration is very similar which we did in the
17 testing, about 2500 ppm. And I've been told that the
18 pH is about five for that testing. And I was told the
19 pH was 4.9, is that correct?
20 MR. NISHIO: Around five.
21 MR. BRICKNER: About five? So it's a
22 very comparable pH.
23 And I'm looking at our report that Chuck
24 just mentioned. The testing was actually done with
25 deionized water also, and the results showed that the

1 deionized water was a harsher environment than the
2 soluble boron in the testing
3 MEMBER SHACK: I'd like to see the
4 accession number. But, yes, I'll have to look at
5 that. I'm a little surprised at those results, but
6 there's aluminum and there's aluminum, of course.
7 MR. BRICKNER: Yes.
8 MEMBER SHACK: I'm not exactly sure just
9 precisely what alloy you're probably using, although
10 there is a type earlier, it is some alloy. But, okay.
11 But there is a report, and so you're in
12 that range for the report?
13 MR. BULLARD: Yes. I can show you
14 through the Holtec number, but that's probably not as
15 much use--
16 MEMBER SHACK: It's not. Oh, well give
17 me the Holtec number, I can probably -- even that will
18 be good enough.
19 CHAIR STETKAR: Well, we should probably
20 get the topical report with the staff's --
21 MEMBER SHACK: Well, I'll get out it of
22 ADAMS, but I'll look for it under the Holtec number.
23 If they have it.
24 The only concern I have is --
25 MR. BULLARD: Would you liked the Holtec

1 number?

2 MEMBER SHACK: -- if that's a proprietary

3 thing versus a topical report that might not be

4 proprietary. I mean it's good for you, but --

5 MR. BRICKNER: There is some proprietary

6 information, but I do believe that there is -- I'm,

7 almost certain there's a nonproprietary version that's

8 in ADAMS.

9 CHAIR STETKAR: It's just we have to be a

10 little careful of what we discuss in open session in

11 case this, you know this gets into information that's

12 a proprietary session, that's the only concern I had.

13 MR. BULLARD: We can certainly share with

14 you the Holtec report number at this time. It's Holtec

15 Report No. HI-2022871. And there is an SE --

16 MEMBER SHACK: There's even an SE on it?

17 MR. BRICKNER: -- for that report. Yes.

18 MR. CURRY: So when these gentlemen

19 leave, and this will be the last chance to ask any

20 questions on criticality.

21 CHAIR STETKAR: Well, fellas, we have

22 anymore?

23 I think you can leave. We know where to

24 find you. Okay.

25 MR. BRICKNER: Thank you.

1 CHAIR STETKAR: Thank you very much.
2 That was helpful.
3 MR. BULLARD: Thank you very much.
4 MR. CURRY: Okay. Next, I think we're
5 going to Process Auxiliaries, which fundamentally is a
6 nonsafety-related system with the exception of
7 isolation functions. Mr. Kitamori-san is our expert
8 here. And you know Mr. Kawata.
9 I said Mr. Kitamori-san. It should be Mr.
10 Kitamori. Sorry.
11 All right. As usual, we have the names of
12 the folks at this table, the acronym list for you, the
13 process auxiliaries and our definition consists of the
14 compressed air and gas systems, the sampling systems,
15 the floor drain system and the CVC, that's the
16 chemical and volume control system. The only safety-
17 related function relates to isolation of these
18 systems, containment isolation of these systems.
19 The compressed air and gas system is
20 further divided up into three subsystems:
21 Instrument air;
22 Station service air, and;
23 Compressed gas.
24 And just flipping back, you have a
25 simplified schematic also in your package there.

1 Instrument air consists of two 100
2 percent trains with a compressor, an air receiver, and
3 an air dryer in each train.
4 Safety related AOVs fail in a safe
5 position on loss of instrument air, and that of course
6 is why it's not a safety-related function.
7 Station service air system consists of
8 three 50 percent trains with compressors. As shown,
9 we really have only two compressors but, you know two
10 receives, three compressor packages I guess is the
11 right way to say it.
12 The station service we can provide
13 instrument air if additional air is needed.
14 Compress gas station. Gas, high pressure
15 nitrogen gas which is used for the SIS accumulators
16 and then the rest of the pressure gas systems are low
17 pressure systems, nitrogen and hydrogen primarily.
18 Well, that summarizes that system.
19 The air compressors, I think I recall are
20 all oil-free air compressors, is that correct? Do they
21 use oil lubricants?
22 MR. HAMAMOTO: This is Hiroshi Hamamoto.
23 Compressor is oil-free.
24 CHAIR STETKAR: They are oil free? Thank
25 you.

1 MR. CURRY: Thank you, Hamamoto-san.

2 All right, moving on to 9.3.2 the

3 sampling systems. Again, no safety-related function.

4 You see a list of sampling systems there, and there's

5 a range of them. And their function is pretty much as

6 expected: RCS sampling, containment atmosphere

7 sampling, et cetera.

8 Equipment and floor drain systems.

9 Again, no safety function except isolation valves.

10 The equipment and floor drain system we have

11 radioactive sumps on, radioactive sumps. The following

12 subsystems as indicated:

13 Radioactive;

14 Non-radioactive;

15 Chemical and detergent,and;

16 Oily;

17 Liquid waste;

18 Radioactive liquid waste goes to the

19 liquid waste management system.

20 CHAIR STETKAR: This drawing shows in the

21 center of the drawing or left center of the drawing as

22 we're looking at it the two normally closed manual

23 valves that show there at the outlet of the ESF room

24 floor drains. Could you tell us a little bit more

25 about those valves and why they're normally closed? I

1 mean, I think I understand but it was a bit difficult
2 for me to follow the whole rationale through
3 everything I read about them.
4 MR. KITAMORI: I am Motohisa Kitamori.
5 This manual valve is normally closed. And
6 this manual valve is classified as safety-related to
7 prevent from flooding.
8 So we have some -- drain -- this drain
9 has piping, so we open this valve.
10 CHAIR STETKAR: So, the reason that
11 they're normally closed, as I understand it, is to
12 prevent flooding of the room through reverse flow in
13 the drain line, is that right?
14 MR. KITAMORI: That is correct.
15 CHAIR STETKAR: Do these rooms have --
16 well, we'll have time to prejudice things. It's not
17 clear to me how that valve normally being closed is
18 necessarily good to prevent flooding in that room.
19 Because if the water comes into the room from any
20 other source other than backflow through the drain, it
21 would seem to me that having that valve closed isn't
22 necessarily a good thing for that room.
23 So, I'm curious. The ACRS does not
24 design systems; it's not our job. We ask questions.
25 I'm curious what decisions were made and whether you

1 looked at all possible sources of flooding in those
2 rooms to justify the decision to have those valves
3 normally closed, which would require an operator if
4 you had water entering the room from another source,
5 like a broken pipe; why that would require an operator
6 then to go try to drain that room or perhaps the
7 broken pipe -- and I don't know which pipes run
8 through those rooms. I mean, obviously if it's only
9 the pipes related to the equipment in the room, I
10 don't care if I fail it because its flooded or fail it
11 because its -- but I also don't know exactly what's in
12 those rooms either. I only know that it's called an
13 essential service or essential equipment room. So I
14 don't know what's in those rooms. I don't know what
15 other pipes run through those rooms. I don't know if
16 there are other drain lines that run through the
17 rooms. I don't know if there's fire protection water
18 that's runs. I don't know what's in there.
19 So, if you could kind of explain what
20 sort of process you went through to conclude that the
21 likelihood of reverse flooding through the drain
22 system outweighed the likelihood of inlet -- you know,
23 other sources of flooding in the room, I think that
24 would be useful.
25 MR. CURRY: One moment.

1 MR. NISHIO: This is Hiroki Nishio.

2 So, in the room there is a second or a

3 return from safety-related group only. And so in the

4 US-APWR we divided into two areas, divided two

5 portions, two safety-related pumps, two areas, safety-

6 related. And so we did it to prevent the potential

7 clogging effect to the -- for example, east side

8 flooding does not effect go to the west side. East

9 side to west side. To prevent that, we close that

10 drain pipe.

11 To create this we can take a credit that

12 one side flooding does not effect to the next side.

13 CHAIR STETKAR: I think I understand

14 that.

15 MR. NISHIO: Yes.

16 CHAIR STETKAR: And as I said, as the

17 ACRS we don't design systems. There is another design

18 that I can think of that would accomplish the same

19 function and leave a manual valve normally open. I'll

20 just leave it at that.

21 And I'm interested in the rationale that

22 said this is the best way to achieve that type of

23 protection that you're talking about, either back flow

24 through the drains or cross-tie or cross-flow from the

25 different divisions through the drain system.

1 MR. CURRY: And I think we understand
2 your question, which is well gee if you leave the
3 valves open, then you have m,any sources of flooding
4 in one drain, a drain valve that's open would drain
5 the room.
6 CHAIR STETKAR: It would.
7 MR. CURRY: And not cause such a problem.
8 So, I don't know if we -- maybe we need
9 to check on the flooding analysis. So we made a
10 decision to close the valves --
11 CHAIR STETKAR: Yes.
12 MR. CURRY: -- which prevents, as Mr.
13 Nishio said, losing both sides of the system but the
14 question is what was more important.
15 CHAIR STETKAR: That's right: What was
16 more important? Because in order to get cross -- I
17 had no idea about the elevations of the rooms. I mean,
18 as shown on this simplified schematic here, those
19 rooms drain into lines that eventually go through a
20 sump. And I'm not sure how gravity works, because I
21 don't know how the different configurations are. But,
22 you know are you protecting against essentially a
23 plausible but quite unlikely condition and making
24 yourself vulnerable to a more likely condition?
25 MR. CURRY: Do we have flooding sources

1 for each area, or maybe we need to do some research to
2 see if potential flooding sources --
3 CHAIR STETKAR: Yes, I don't know what --
4 you know, I don't know whether your PRA has done that
5 type of internal flooding analysis. I don't, Dennis,
6 you looked a little.
7 MEMBER BLEY: There's some flooding, but
8 I don't remember details.
9 CHAIR STETKAR: Okay. I mean, you'd need
10 to look at, as I said, not only the safety-related
11 piping in that room but are there any fire protection
12 lines that happen to transit through the rooms or
13 other drain lines, or -- you know -- I don't know what
14 level of detail you have it at.
15 I was just curious. That one level I
16 think I understand the kind of reaction to or
17 licensing question, but sometimes those reactions may
18 not necessarily be the best solution.
19 MR. CURRY: And the question is the basis
20 for the valves being closed or open and what is more
21 important?
22 CHAIR STETKAR: Right.
23 MR. CURRY: The back floor versus
24 individual room flooding. So we can discuss that.
25 MR. KAWANAGO: This is Shinji Kawanago.

1 Yes, and we understand the question and
2 what is the point. But what we want to emphasize
3 again, and basically on a design-basis we need to
4 think about, And it's internal flooding. And for
5 example, the fire and it's a piping break, and the
6 drain would come. And even if there is -- and -- even
7 if we don't need to assume some piping tank break or
8 potential -- and a tank went out, however we need to
9 think about the fire piping break or as a source of
10 the internal flooding.
11 CHAIR STETKAR: Right.
12 MR. KAWANAGO: And also, and this really
13 we needed to have the -- and the division on the east
14 side and the west side so that -- and in your point of
15 those is our protection that internal flooding to
16 effect the other division, and nobody's ready to quote
17 this one. So, of course -- and usually there is no --
18 actually the -- the water. However, and to keep the
19 safety --
20 CHAIR STETKAR: You know, I understand,
21 and I'll stop trying to be cagey. Why didn't you put
22 two series check valves in there that would allow
23 water to flow this way and not water flow that, and
24 keep the valves open? I mean, that would accomplish--
25 MEMBER BLEY: The same thing.

1 CHAIR STETKAR: -- that would allow water
2 to flow this direction and not allow water to flow
3 that direction and it would seem to accomplish both
4 functions?
5 MR. KAWANAGO: Okay.
6 And as I said, we don't design things
7 here, but I'll toss that as sort of my first thought
8 of why didn't you do that? Somebody made the decision
9 to do this and there must be some basis for that. One
10 series check valve would probably be good enough, but
11 for double isolation you might need two.
12 MR. KAWANAGO: We understand your point.
13 And maybe that is one -- a resolution of the -- you
14 know--
15 CHAIR STETKAR: But honestly, I mean you
16 know that -- I have to be careful here because it is
17 not our function to suggest designs. That's not our
18 purpose. Our purpose is, however, to understand the
19 technical rationale behind a specific design decision
20 and make sure that from kind of an integrated safety
21 perspective we have assurance that people have thought
22 of all these different possibilities. How you solve it
23 is your side.
24 MR. KAWANAGO: And to show the safety-
25 related evaluation and whether or not we don't use a

1 check valve. So this is a safety-related function, so
2 we need to check the integrity of the value. So the--
3 we use to check valve, we can't check the integrated
4 fuel degrade --
5 CHAIR STETKAR: And as I said, it's not
6 our job to kind of design the system. It's just --
7 anyway, we'll leave it, but I'm still kind of
8 interested to see if you looked, you know all sources
9 of flooding and basis for that.
10 MR. CURRY: I understand.
11 And finally the last part of 9.3 is the
12 CVCS. A typical chemical and volume control system
13 maintaining coolant inventory:
14 Seal-water flow, we talked about it
15 earlier as a function;
16 Capability of makeup for small leaks.
17 Controlling chemistry;
18 Safety-related functions are really
19 maintaining the containment boundaries.
20 A simplified schematic showing the 200
21 percent charging pumps and the letdown line.
22 CHAIR STETKAR: Interpret silence and
23 move on as quickly as you can. I don't have any
24 questions on this one.
25 MR. CURRY: Thank you, sir.

1 All right. That concludes what we have
2 to say about 9.3.
3 And I think we are ready to move to 9.4.
4 So thank you.
5 So we are going to change the team a
6 little bit. Mr. Hotchkiss is going to come up and
7 Junya Hattori-san will be back and Keita Otani.
8 Mr. Hattori, Mr. Hotchkiss and Mr. Otani.
9 MR. HOTCHKISS: Okay. Good afternoon.
10 As Jim indicated, my name is Marc
11 Hotchkiss. We're going to be talking about section
12 9.4 of the DCD, the ventilation systems. Okay. Okay.
13 This section is a similar format to the
14 other ones you've seen today with we do introduce the
15 technical experts: Otani-san, Hattori-san. And then
16 we have a list of acronyms to refer to if necessary.
17 DCD Section 9.4 ventilation systems
18 includes this list of systems and there's an
19 indication of safety-related functions for each of
20 these.
21 The main control room heating,
22 ventilating and air conditioning system has safety-
23 related functions, as you'd expect.
24 There is a section 9.4.2 for spent fuel
25 pool area ventilation system, however the US-APWR does

1 not have a separate defined spent fuel pool area
2 ventilation system. That spent fuel pool area
3 ventilation is accomplished by the aux building
4 ventilation system, which is 9.4.3.
5 And we also discuss turbine building
6 ventilation system, 9.4.4. Engineered safety feature
7 ventilation system, 9.4.5 and containment ventilation
8 systems 9.4.6.
9 So, we'll begin with the Main Control
10 Room HVAC.
11 The Main Control Room HVAC system
12 designed for US-APWRs is typical of U.S. plants,
13 actually, very much as we'll see when we get to the
14 flow diagram.
15 The functions of the system are to
16 control the environment within the control room
17 envelop, of which the Main Control Room is a part.
18 And it is a safety-related system and functions to
19 exclude entry of airborne radioactivity into the
20 control room envelope from the outside air intake. And
21 removed any radioactivity within the CRE environment.
22 How the system supports and maintains
23 habitability and functioning of instrumentation during
24 normal conditions and design basis accidents.
25 And this is a simplified diagram,

1 representation. I guess just one other system
2 description type point. There are three modes of
3 operation for the system. There's a normal mode,
4 which essentially takes outside air as makeup air,
5 circulates it through air handling units, conditions
6 the air and exhausts through the kitchen/toilet
7 exhaust fan. That's normal conditions.
8 There's a pressurization mode which is
9 essentially the emergency condition which also uses
10 outside air to pressurize the control room envelop,
11 but filters that air through the emergency filtration
12 units. I think I can get a mouse up here, which is
13 this section, 200 percent trains emergency filtration
14 units. And also recirculates a portion of the control
15 room envelop air through those units during
16 pressurization mode.
17 And the third mode of operation is
18 isolation mode, and that occurs in the event of smoke
19 detection or gas detection outside of the control
20 room. And that isolates the outside air intake and
21 recirculates the control room environment atmosphere
22 through the air handling units for the conditioning of
23 the air.
24 That's the description of the system.
25 CHAIR STETKAR: Marc, you characterized

on the exhaust fan, you show smoke purge-- I'm sorry. Smoke purge. Is that initiated automatically, do you know?

MR. HOTCHKISS: Smoke purge?

CHAIR STETKAR: Yes.

MR. HOTCHKISS: No.

CHAIR STETKAR: It's manual?

MR. HOTCHKISS: On a smoke signal it's shutdown as it was running, which it normally wouldn't be.

CHAIR STETKAR: Okay. Okay.

MR. HOTCHKISS: But once the condition is cleared, then it's manually maturated to clear smoke.

CHAIR STETKAR: Okay. Thank you.

MR. HOTCHKISS: And the exhaust fans are here not labeled, I guess on this drawing.

CHAIR STETKAR: They're different diagrams.

MR. HOTCHKISS: Any other questions on this system. Okay.

CHAIR STETKAR: Speaking about the ventilations, there are a lot of them, but they're pretty simple.

MR. HOTCHKISS: Yes. And they're very similar to what you're used to.

1 CHAIR STETKAR: Yes. Yes.

2 MR. HOTCHKISS: Okay. The next slide or
3 two are related to open items that we are working with
4 the staff on to close. They're documents in the SER.

5 Okay. The next system is auxiliary
6 building ventilation system consisting of a number of
7 subsystems:

8 The aux building HVAC system;

9 The non-Class 1E electrical room HVAC
10 system;

11 The main steam/feedwater piping area HVAC
12 system, which we discussed a little earlier, and;

13 The tech support center, TSC HVAC system.

14 The aux building and ventilation system
15 is a nonsafety-related system, again very similar or
16 the HVAC subsystem is nonsafety-related, very similar
17 to US-PWR clients. The only safety-related function
18 for this system is there are some isolation valves
19 that close to allow safety-related ventilation systems
20 to assume the ventilation functions during an
21 accident. And there's also an isolation in front of
22 the main vent stack during an accident condition.

23 The aux building HVAC system functions to
24 maintain a proper operating environment within the
25 auxiliary building, the reactor building, the power

1 source building and the access control building during
2 normal plant operation.
3 The system also functions to keep dose
4 levels due to airborne radioactive material in
5 normally occupied spaces below allowable values during
6 normal conditions. And it does so by maintaining a
7 slightly negative pressure within the controlled areas
8 relative to the outside atmosphere. And that's
9 accomplished by a greater exhaust flow than a supply
10 flow.
11 And the system maintains air flow from
12 areas of low radio activity to areas of potentially
13 higher radioactivity by exhausting from the higher
14 radiative, potentially higher radioactive areas.
15 And the next slide is a little busy, but
16 it's a schematic representation of the system. On the
17 left side are the supply fans, two 50 percent fans
18 normally operating. And the center portion is just a
19 representation of the spaces that are ventilated with
20 supply on the left center and exhaust on the right
21 side. And then the three exhaust fans,two of which
22 are normally operating are shown on the right hand
23 side of the drawing.
24 CHAIR STETKAR: Something I hadn't really
25 thought about, so I have to be careful here, the

1 center part of this drawing, for example the lines
2 that feed the Safeguards component areas are shown
3 with isolation dampers or valves that I think you said
4 goes closed on an accident sequence, ECCS or whatever.
5 MR. HOTCHKISS: ECCS, yes.
6 CHAIR STETKAR: There are lines at the
7 top that go to, for example, the CCW up pump areas and
8 emergency feedwater pump areas and the essential
9 chiller areas that don't have similar isolation
10 valves. And yet I know, for example, there's essential
11 chilled water cooling goes to air handling units in
12 those areas. Can you tell us a little bit about the
13 difference? I mean, I kind of asked the question
14 earlier, but I -- I wasn't putting some of the pieces
15 together correctly about, you know what provides
16 normal ventilation and is there a transfer from what's
17 called normal auxiliary building ventilation to
18 safety-related room cooling? In particular, I
19 understand the ones down below that are isolated. I'm
20 more curious about the ones up above that don't show
21 similar isolation valves for the component cooling and
22 EFW and the chillers themselves.
23 MR. HOTCHKISS: Understand. Can I confer
24 just briefly?
25 Okay. I think we're clear on this.

1 What's indicated with the dampers --

2 CHAIR STETKAR: Yes.

3 MR. HOTCHKISS: -- those are actuated on

4 a high radiation signal in order to line up the

5 containment low volume purge exhaust filtration units-

6 -

7 CHAIR STETKAR: Okay.

8 MR. HOTCHKISS: -- if there's high

9 radiation in those spaces.

10 CHAIR STETKAR: Okay.

11 MR. HOTCHKISS: In the other ares, an

12 excellent condition to safety-related air handling

13 units start and provide cooling to the area, but

14 auxiliary building ventilation is maintained. Only on

15 a high radiation would we isolate the are.

16 CHAIR STETKAR: Okay. Okay. Than you.

17 And so to make sure I understand, are any

18 of the dampers that are shown on this drawing I assume

19 would show up on the figure in the DCD, are any of

20 these dampers automatically closed by an ACCS signal?

21 MR. HOTCHKISS: No.

22 CHAIR STETKAR: No?

23 MR. HOTCHKISS: They would be closed on--

24 CHAIR STETKAR: Only high radiation?

25 Thank you.

1 MR. HOTCHKISS: And there's a remote
2 manual right there.
3 CHAIR STETKAR: Okay. That explains the
4 differentiation about which areas show. Thank you.
5 MR. HOTCHKISS: Anything else on
6 auxiliary building HVAC system?
7 Okay. The next systems to discuss,
8 there's three on this slide on the aux building
9 ventilation of the non-Class 1E electrical room HVAC
10 system, it's nonsafety-related and it cools the non-
11 Class 1E electrical room. It maintains ME conditions
12 acceptable for electrical equipment and component
13 operation, and it has the additional function of
14 maintaining the hydrogen concentration in the room
15 below one percent in the battery rooms, actually.
16 And the next bullet in the slide, the
17 TSC, the Tech Support Center HVAC system, is also
18 nonsafety -related. And that functions to limit the
19 airborne radioactive material in the TSC envelope
20 environment and remove radioactive material from the
21 environment's refiltration.
22 And maintains proper environmental
23 conditions for habitability and equipment operation
24 within TSC.
25 The third system on this slide is the

1 main steam/feedwater piping area HVAC. It's also
2 nonsafety-related and maintains proper environment for
3 the components within the main steam/feedwater piping
4 area.
5 And that's it for the auxiliary building
6 ventilation system. An any question or we can move to
7 turbine building ventilation.
8 The turbine building area ventilation
9 system is nonsafety-related. Basically the turbine
10 building is not expected to have any airborne
11 radioactive material in the ambient or in the
12 environment. And there are no safety-related
13 components in the turbine building.
14 The system functions to maintain a
15 suitable environment for operation of equipment within
16 the turbine building.
17 CHAIR STETKAR: I've read a couple, and I
18 don't remember whether I asked this before and it's
19 not a ventilation system question. But the statement
20 has been made a couple of times that there are no
21 safety-related components in the turbine building. And
22 "no," is a very big word.
23 Are there other safety-related
24 instruments or signals that communicate from, for
25 example, turbine trip to reactor protection system;

1 are those located in the turbine building?

2 MR. HOTCHKISS: There is equipment

3 providing that function within the turbine building.

4 We actually have an open item that's on this next

5 slide related to that question.

6 CHAIR STETKAR: Okay.

7 MR. HOTCHKISS: And we're working with

8 the staff now to resolve that.

9 CHAIR STETKAR: Okay. Okay. I just

10 wanted to make sure I understood that. Thanks.

11 MR. HOTCHKISS: Okay. The next

12 ventilation system is the engineered safety features

13 ventilation system. It also consists of a number of

14 subsystems:

15 The annulus emergency exhaust system;

16 The Class 1E electrical room HVAC system;

17 Safeguards component area HVAC system;

18 Emergency feedwater pump area HVAC

19 system, and;

20 Safety-related component area HVAC

21 system.

22 And we'll go through each one of these.

23 A couple of these we talked about back when we were

24 talking water.

25 Again, the annulus emergency exhaust

1 system is safety-related, it's an ESF ventilation
2 system. And it functions to remove and retain through
3 filtration fission products that may enter the air
4 from the penetration areas and Safeguards components
5 areas following an accident.
6 I'll just skip to the next slide just
7 briefly while we're talking about annulus emergency
8 exhaust, just to show the simplified run.
9 The system consists of potentially along
10 the left side of the drawing two exhaust filtration
11 units, each with a high efficiency filter and a high
12 efficiency particulate air filter, a HEPA filter. And
13 those components automatically start to filter the
14 exhaust air from, as I mentioned, the penetration
15 areas and the Safeguard component areas following an
16 accident. Exhaust to the bench stack.
17 Okay. So back in the previous slide, we
18 got a couple of the systems listed. The Class 1E
19 electrical room HVAC systems functions to maintain
20 proper operating environment for Class 1E to electric
21 equipment in the rooms. And also maintains a hydrogen
22 concentration below one percent by volume in the Class
23 1E battery rooms.
24 And the other three subsystems we
25 discussed on the previous slide have the same

1 function, and they're also safety-related, but they
2 function to just provide the proper cooling and
3 environment for operation of the equipment within the
4 rooms.
5 We do have some simplified drawings of
6 the Class 1E electric room HVAC system. I guess that's
7 the only one we have.
8 Any questions on ESF ventilation?
9 Okay. The last ventilation system to
10 present is the containment ventilation system. And
11 that system consists of four subsystems:
12 The containment fan cooler system, we
13 touched on that back when we discussed chilled water
14 earlier this morning;
15 The control rod mechanism cooling system;
16 Reactor cavity cooling system, and;
17 The containment purge system.
18 We've got a brief description of each of
19 those systems.
20 The containment fan cooler system
21 functions to maintain a proper environment within
22 containment during normal plant operation in the LOOP
23 condition.
24 The CRDM cooling system removes heat from
25 the CRDMs.

1 The reactor cavity cooling system
2 functions to remove heat from the reactor vessel, the
3 reactor vessel support structure and the primary
4 shield wall. And it also functions to cool the
5 supports for the primary shield in the reactor vessel
6 to prevent concrete dehydration.
7 The containment purge system has two
8 subsystems to it as well. The low volume purge and
9 the high volume purge.
10 The low volume purge system functions to
11 minimize the spread of radioactive contamination from
12 areas serviced by the aux building HVAC system, which
13 was what we just talked about on that figure of aux
14 building ventilation. And essentially on a high
15 radiation signal we can line up the affected area to
16 this containment low volume purge system, which
17 includes a HEPA filter and charcoal filter.
18 The system also provides relief from
19 pressure buildup within containment cause by
20 instrument air leakage and containment temperature
21 fluctuations.
22 The high volume purge system is used to
23 maintain low concentrations of radioactive airborne
24 material in containment atmosphere to allow access
25 during maintenance and inspection activities.

1 The next slide is a simplified floor
2 diagram of all of those containment ventilation
3 systems. On the left side is what we just discussed,
4 the low volume purge and high volume purge on the
5 upper part of the left are the air handling units
6 which provide cooling or heating for the air in
7 containment. And the lower portion of that slide on
8 the left is the air cleanup portion, which includes
9 high efficiency filters, HEPA and charcoal filtration
10 for the low volume purge. And then a high efficiency
11 filter and a HEPA for the high volume purge.
12 And to the right are the other three
13 systems we discussed: The fan coolers, the CRDM
14 cooling and the cavity cooling.
15 CHAIR STETKAR: I don't understand the
16 function and the classification of the containment fan
17 coolers in this part, and maybe you can help me.
18 The fan coolers are not safety-related?
19 MR. HOTCHKISS: That's correct.
20 CHAIR STETKAR: And you mentioned it,
21 their function as stated is to provide normal
22 environmental temperatures inside the containment,
23 which everybody does that. But one of their functions
24 is to maintain, and it's cited specifically, to
25 maintain temperatures during a loss of offsite power,

1 and it can be powered from the alternate ac gas
2 turbines. So, they're kind of more than just normal
3 nonsafety things, but they're not safety-related. Plus
4 you've plumbed up some safety-related component
5 cooling water supply to them, but not for a safety-
6 related function.
7 So, I'm trying to understand -- I guess,
8 you know they're not safety-related so that means we
9 haven't seen the safety, you know Chapter 15 or
10 Chapter 6 analyses yet. It hasn't come before us yet.
11 So, apparently, the safety analyses do not include
12 credit for them.
13 MR. HOTCHKISS: Correct.
14 CHAIR STETKAR: But do the analyses of
15 loss of offsite power event include credit for that
16 who have maintained environmental conditions inside
17 the containment?
18 MR. HOTCHKISS: Now the loss of offsite
19 power event that is not the loss of all ac event --
20 CHAIR STETKAR: That's right.
21 MR. HOTCHKISS: -- is the loss of offsite
22 where we were loading 1E buses onto the GTGs.
23 CHAIR STETKAR: Right.
24 MR. HOTCHKISS: And in that event you
25 still would need to shutdown the plant, cool down the

1 containment, not a natural circulation, most likely so
2 there's still going to be some containment atmosphere
3 cooling required. So that's why these have a function
4 of loss of offsite power containment cooling.
5 The other two -- well, the other events
6 you were talking about you referred to as we have a
7 cross connect to provide cooling to this from CCW is a
8 severe accident mitigation alternative. And for the
9 purpose of, you know in a severe accident, preventing
10 -- or some sort of cooling if we don't have the normal
11 design-basis containment protection system of
12 containment spread. That's the safety-related
13 containment protection , over pressure protection
14 system is containment spread.
15 CHAIR STETKAR: What happens if I have a
16 loss of offsite power and I do not have the fan
17 coolers?
18 MR. HOTCHKISS: There is still a
19 considerable amount of heat being generated from the
20 equipment within containment, so the temperature would
21 increase.
22 CHAIR STETKAR: Okay. Would I -- as I
23 said, we haven't seen the accident analyses and I
24 guess this is more appropriate for that discussion.
25 But I'm just curious. On this plant they're somewhere

1 between something that sounds like the purely
2 nonsafety-related and something that sounds like it's
3 safety-related.
4 So, I guess we'll just table that
5 discussion for until we get the accident analyses--
6 MR. HOTCHKISS: The safety-related --
7 CHAIR STETKAR: -- for loss of offsite
8 power.
9 MR. HOTCHKISS: The safety-related
10 containment protection function is accomplished by
11 containment spread.
12 CHAIR STETKAR: I understand. And if it
13 were not for the point that you made and the point
14 that's int he DCD that says "The containment fan
15 cooler system is designed to satisfy the following
16 design-basis:
17 Maintain containment air temperature
18 below 120 degrees Fahrenheit during normal operations
19 and below 150 degrees during LOOP condition." If it
20 was not for that last phrase about some requirement
21 for LOOP, I'd better understand.
22 MEMBER BLEY: Well, apparently they don't
23 need for it that purpose, so you know classify it.
24 CHAIR STETKAR: Bit it's specifically
25 designed for that purpose, so I --

1 MR. HOTCHKISS: But if -- okay.

2 CHAIR STETKAR: You're following --

3 MR. HOTCHKISS: Yes.

4 CHAIR STETKAR: LOOP is a design-basis

5 event.

6 MEMBER BLEY: Actually, I think we'll see

7 it better looking in the PRA. I don't think we're

8 going to see it in Chapter 15, because if you just

9 lose the sprays over it, it's great.

10 CHAIR STETKAR: Yes, but you don't want

11 to lose the sprays on a loss of offsite power, do you?

12 Good God, I hope not.

13 MEMBER BLEY: That's right.

14 CHAIR STETKAR: Yes.

15 MR. HOTCHKISS: Really the question is

16 you're kind of poking at is are they risk significant.

17 CHAIR STETKAR: And I didn't want to

18 raise that question. I originally thought about asking

19 that question, but that's not appropriate for this

20 group.

21 MEMBER BLEY: I think that's what it's

22 complete.

23 CHAIR STETKAR: And I wouldn't

24 necessarily have asked it in this forum, except for

25 the fact that the LOOP design function is explicitly

1 identified in the DCD.

2 MR. KAWANAGO: This is Shinji Kawanago

3 from MNES.

4 And this is just in our information for

5 the design -- to get it to the rest of offsite power.

6 And as you stated, basically it is not a safety-

7 related requirement. However, and when actually we

8 have the loss of offsite power and you -- and after --

9 and after -- after the finish and it resolves loss of

10 offsite power, immediately linked to restart the power

11 plant immediately so that -- and if we don't have this

12 cooling function of the reactor vessel, cooling, CRD

13 cooling found, and temperature will increase, I mean

14 with over and around 150 and we needed to shape -- of

15 the CRDM and the coil and allowing the reactor --so

16 again, it is not safety-related --

17 CHAIR STETKAR: It's not safety -- it's

18 more, if you will, investment protection type?

19 MR. KAWANAGO: Sure, sure, sure.

20 CHAIR STETKAR: Okay. Okay. That helps.

21 That helps. Thank you. Thank you.

22 MR. HOTCHKISS: Okay. So that was it for

23 containment ventilation, unless there's other

24 questions. Actually, that concluded 9.4.

25 MR. CURRY: All right. Mr. Chairman,

1 we're going to change to 9.5 and change the team up
2 here. So we know Mr. Otani. And we're really starting
3 with 9.5.1, so Mr. Ron Reynolds will be the leading
4 presenter for this. And then for 9.5.2 our technical
5 expert will be Mr. Tanaka for 9.5.2 to 9.5.8.
6 MR. REYNOLDS: Are we ready? Okay. Good
7 afternoon. I'm Ron Reynolds. I have Otani-san as a
8 technical expert with Chapter 9.5.1.
9 We have, again, a list of acronyms that
10 we an go through. I think they're fairly
11 straightforward.
12 And, of course, I'll be talking on this
13 9.5.1.5 protection program, and we'll start with that
14 first section.
15 Again, as you are all aware, that the US-
16 APWR is a four-train, 50 percent-train system. And
17 during the construction of the US-APWR, for me I guess
18 I could say but I had 25 years of experience, over 25
19 years in the nuclear industry and worked on
20 construction of some, and worked on NUREG-0800 type
21 plants, and worked on the pre-1979 plants. And this
22 is a dream come true if you look at the US-APWR how
23 it's compartmentalized. So, it's a good backbone for a
24 fire protection program to start.
25 And with that- of course, the

1 requirements of 10 CFR 50.48, Appendix A; the NUREG-
2 0800, Reg. Guide 1.189; all the NFPA codes including
3 NFPA 804 we're using those requirements and that
4 guidance you'll probably see are very similar to most
5 other fire protection programs in that respect.
6 And so the primary objective of the fire
7 protection:
8 To minimize the potential for fires and
9 explosions to occur;
10 Rapidly detect, control and extinguish
11 any of those fires that do occur, and;
12 Assure that any fire that is not properly
13 extinguished by the fire suppression system will not
14 prevent safe-shutdown of the plant and will minimize
15 the potential for radiological release to the
16 environment.
17 Pretty straightforward for all fire
18 protection programs.
19 The fire protection program describes:
20 The defense-in-depth approach. We have
21 the detection, suppression, separation, administrative
22 controls; all of that adds up to the defense-in-depth
23 approach in fire protection.
24 The program has got:
25 Describes overall fire protection program

1 for the facility;

2 The positions and responsibilities for

3 the program the fire brigade, their training, the

4 requirements, the protocol, the fire protection

5 engineers requirements and so forth;

6 Interface with control room and security

7 as well.

8 The program describes automatic detection

9 and the manual and automatic suppression systems. And

10 as I did mentioned earlier, the administrative

11 controls are also a big part of the fire protection

12 program, Hot works permits, transit combustible

13 permits, and even general housekeeping is a big part

14 of it just to maintain control of combustibles, any

15 transient combustibles into the plant.

16 Many of these programmatic issues do

17 rely, or are the responsibility, I should say, of the

18 COL Applicant to maintain and establish those

19 programmatic controls.

20 Fire protection design features for the

21 US-APWR:

22 Prevent fire initiation by controlling,

23 separating and limiting the quantities of combustibles

24 and sources of ignition. Again, that's the same thing

25 as saying we have fire barriers, we're going to have

1 administrative controls to ensure that we could reduce
2 the sources of ignition and try to contain a fire if
3 it does occur.
4 And again, that goes onto the next
5 bullet. Isolate combustible materials and limit the
6 spread of fire by subdividing the plant structures
7 into fire areas. No further separated into fire zones.
8 Separate redundant safe-shutdown
9 components and associated electrical divisions by 3-
10 hour fire rated barriers. That's to preserve the
11 capability to achieve and maintain safe shutdown of
12 the plant following a fire. First we need two trains
13 for safe shutdown of the plant. And you could assume
14 one train is a maintenance, we could have a fire in
15 one train.
16 Preserve the capability to achieve and
17 maintain safe shutdown of the plant using the controls
18 external to the Main Control Room. Should a fire
19 require the occupants of the main control to leave, we
20 have the remove shutdown room that's completely
21 electrically separated, it's quite a distance away. I
22 think it's three levels from the main control isolated
23 with its own ventilation and isolation.
24 Separate redundant trains of safety-
25 related equipment used to mitigate the consequences of

1 a design-basis accident.

2 CHAIR STETKAR: Ron, before you slip

3 through this, a couple of questions. And I don't now

4 if you're the right person to as, but I'll ask it to

5 get on the table.

6 MR. REYNOLDS: Yes.

7 CHAIR STETKAR: How are the cables from

8 the four safety divisions configured as they flow to

9 the control room? What sort of barriers or separation

10 do you have?

11 I mean, I haven't studied the physical

12 layout of the plant. I'm close enough to understand

13 whether you have, you know the traditional large cable

14 spreading room, which I assume you may not. And if you

15 do, what sort of barriers do you have there to prevent

16 multi-division fire impacts?

17 MR. REYNOLDS: I understand.

18 First of all, of course you know that we

19 have the four-trains; they're all separated by fire

20 barriers. And even within each train, there's

21 additional separation of fire barriers. So, it's not

22 just one fire area per train.

23 And, of course, all of those cables are

24 separated. There's no interaction to the train.

25 Now, the question is: How do they all

1 come together to the control room?

2 CHAIR STETKAR: Right.

3 MR. REYNOLDS: And that's --

4 CHAIR STETKAR: I've actually worked on

5 four-train plants.

6 MR. REYNOLDS: And fire is an issue

7 because eventually they have to come to one point.

8 CHAIR STETKAR: Right.

9 MR. REYNOLDS: We do have four electrical

10 rooms that are separated for Train A, B, C and D that

11 have fire barrier separation. And these cables will be

12 coming up through that floor -- or through the ceiling

13 of that room into the floor of the --

14 CHAIR STETKAR: So under the control room

15 there are actually four individual rooms?

16 MR. REYNOLDS: There's four electrical --

17 electrical rooms. Yes, I don't know what the relation

18 is, I guess they're directly under where the

19 electrical rooms are located. They're under the

20 control room

21 CHAIR STETKAR: I'm just curious, because

22 I have yet to see a four-train plant that doesn't

23 somehow have a place where these things come together.

24 MR. REYNOLDS: Well, and even with this

25 plant as they come through, there's a portion that

1 will have -- at this point in the design there is a
2 portion, I understand, that will have some close
3 proximity and would possibly need fire wrapping on a
4 cable or a conduit containing cable.
5 MEMBER BLEY: This is after they come out
6 of this electrical rooms?
7 MR. REYNOLDS: Yes.
8 MEMBER BLEY: Somewhere like under the
9 floor?
10 MR. REYNOLDS: Yes. I'm probably not
11 able to describe exactly the routing of these cables
12 clearly. I apologize for that.
13 CHAIR STETKAR: Maybe tomorrow. And the
14 problem is if we start showing building layouts,
15 occasionally you get into safe security related
16 issues. But there's some configuration that you could
17 show us, it might help, you know both a planned view
18 and an elevation view. In principle we have those
19 someplace, because as I said I didn't have enough time
20 myself to do some homework and I was just curious
21 because, you know you make a point about separation by
22 barriers.
23 MR. REYNOLDS: Yes.
24 CHAIR STETKAR: And typically, as I said,
25 I have yet to see a four-train plant that doesn't face

1 the problem of multi-divisions in a single space.

2 MR. REYNOLDS: It is one of the more

3 difficult hurdles to overcome. And --

4 CHAIR STETKAR: And the only reason I ask

5 that is if, indeed, you do have that space what in

6 your design -- you know, how are you protecting things

7 within your design? You mentioned five wraps, for

8 example.

9 MR. REYNOLDS: Right. That would be the

10 protection of choice would be to put a qualified fire

11 wrap on. And my understanding is that it's a very

12 short segment of electrical conduit that would need to

13 have potential for that to have a fire wrap. I mean,

14 so we would pt either a three-hour fire wrap on or a

15 one-hour automatic suppression detection. We would

16 meet the requirements, that would be for certain.

17 Okay.

18 CHAIR STETKAR: And here I have to admit

19 I gave up. I didn't read the complete Fire Hazards

20 Analysis.

21 In some designs that I've seen, I'm

22 talking about the fourth checkmark here about

23 abandoning the Main Control Room and going to remote

24 shutdown.

25 In some designs that I've seen the plant

1 design facilitates a fire in the control room that
2 requires the operators to relocate to the Remote
3 Shutdown Room, and does that quite well.
4 I've seen some plants where a fire in the
5 Remote Shutdown Room because of the way the circuits
6 are configured, not only disables the Remote Shutdown
7 Room but also disables the Main Control Room. And
8 design-basis is not that people live in the Remote
9 Shutdown Room and relocate to the Main Control Room.
10 So, I was curious whether you know, and this is kind
11 of an electrical question but it comes upon the
12 purview of the Fire Hazards Analysis, whether or not
13 you've looked at fire in the Remote Shutdown Room
14 because it's another place where several things
15 together, that may affect not only the Remote Shutdown
16 Room, obviously, but because of the way the circuits
17 are configured, disable controls in the Main Control
18 Room.
19 MR. REYNOLDS: Well as I mentioned
20 before, and I could give the answer to the best that I
21 know because it is more into the electrical I&C area,
22 but it is electrically separated, the Remote Shutdown
23 Room from the, Main Control Room. And in order to
24 isolate the Main Control Room and then initiate
25 actions from the Remote Shutdown Room, there's a

1 series of actions that need to take place. Of course,
2 there's a permissive switch. And I'm being able to
3 tell you this in a general sense that allows you to
4 disconnect the Main Control Room and the connect to
5 the Remote Shutdown Room. Then there is another switch
6 that severs the Main Control Room from that and allows
7 that complete electrical separation.
8 CHAIR STETKAR: And that at a high
9 level is kind of what I was looking for in the sense
10 that if that's true, you have to actively, let's say,
11 activate--
12 MR. REYNOLDS: That's correct.
13 CHAIR STETKAR: -- the Remote Shutdown
14 Room, that's fine. There's some plants that have a
15 Remote Shutdown Room essentially continuous but
16 online.
17 MR. REYNOLDS: Right.
18 CHAIR STETKAR: The control signals kind
19 of go through there and out to the equipment, or an
20 active pat of the system. And if this design doesn't
21 do that, that kind of answers my question.
22 MR. REYNOLDS: That's right.
23 CHAIR STETKAR: Thanks. Thank you.
24 MR. REYNOLDS: Sure.
25 CHAIR STETKAR: I'm still curious to see

1 how that room under -- that one is still open. I'm
2 still curious to see how the room is configured and
3 where the cables comes together.
4 MR. REYNOLDS: Okay. To go on to the
5 next slide, clarification design features. That is to
6 prevent fire initiation, detect and locate fires and
7 provide operator indication of the location of the
8 fire.
9 Okay. The detection system is going to
10 also provide local, audible and visual alarms for
11 occupants of the building. We'll follow NFPA
12 requirements.
13 Provide the capability to extinguish
14 fires in any plant area, to protect site personnel,
15 limit fire damage, and enhance safe-shutdown
16 capabilities.
17 Supply fire suppression water at a
18 sufficient flow rate and pressure in accordance with
19 NFPA codes. And that's basically looking at our
20 largest sprinkler demand plus our 500 gallons for
21 water hose allowance for a duration of two hours.
22 We'll follow that with NFPA codes for the fire pumps,
23 tanks if they're used and the fire main.
24 Maintain a 100 percent design capacity
25 for the fire pumps, assuming the failure of one of the

1 pumps or loss of offsite power. US-APWR uses two pumps
2 and so one is electric and one is diesel driven.
3 The fire protection system is nonsafety-
4 related, of course with the exception of the piping
5 between and including the containment isolation
6 valves. However, there are seismic design
7 requirements that are applied to portions of the fire
8 protection system; that's basically the standpipe
9 systems that are in areas containing equipment
10 required for safe shutdown following the SSE.
11 Okay. The Fire Hazards Analysis. The
12 purpose of the Fire Hazards Analysis or FHA is to:
13 Evaluate the potential in-situ and
14 transient fire and explosion hazards;
15 Also to define the fire barrier
16 locations;
17 Identify detection and suppression
18 coverage throughout the plant;
19 Confirm that the effects of a fire in any
20 location in the plant do not adversely impact the
21 ability to shutdown the plant ore release
22 radioactivity to the environment;
23 Select appropriate measures for fire
24 prevention, fire detection, fire suppression, and
25 containment within each of the areas that contain

1 system structures and components important to safety.
2 The FHA is performed for areas of the
3 plant containing safety-related components and for
4 other areas. It's also for the turbine building, other
5 areas that may not contain safety-related equipment,
6 but for the generation of electricity.
7 The FHA is performed on a fire area by
8 fire area basis in fire zones. Again, it's fire areas
9 that are bounded by fire barriers: Floor, ceiling,
10 walls and within those fire areas we're separating
11 again up to five zones. It gives a better feel for
12 the fire protection engineer in the ongoing years
13 even, to see where the concentration even within a
14 fire area, where these combustibles are concentrated.
15 So that's helpful.
16 The approach provides confidence that the
17 plant safety is achieved and the intended fire
18 protection program requirements are satisfied.
19 MEMBER SHACK: That is curious. Whenever
20 you do reference 1.189 in that fire thing, it's always
21 Rev 1. There's is a current version is Rev. 2.
22 MR. REYNOLDS: Well, it's kind of the
23 code, its the regulation of when we were in --
24 MEMBER SHACK: Okay. When you submitted
25 this.

1 MR. REYNOLDS: When we submitted Rev. 1
2 was the -- same with many of the fire -- NFPA codes
3 that we used for the standard plant design. Of course,
4 as the applicant --
5 MEMBER SHACK: Even though you haven't
6 received your certification yet, it goes on to when
7 you submitted it? Oh, okay.
8 MR. REYNOLDS: That concludes my
9 presentation of 9.5.1. I know we have one open
10 question that we have to look at when we get a chance,
11 if you want to do that.
12 MR. CURRY: No. If staff brings it up,
13 we'll --
14 MR. REYNOLDS: Okay. Okay. That's it.
15 Any other questions?
16 I thank you very much.
17 CHAIR STETKAR: Yes. I was just looking
18 through. As I said, I didn't have a chance to read
19 all of the Fire Hazards Analysis. It's a number of
20 pages. And I'm looking at the drawings.
21 I see on the planned view drawings, the
22 four electrical rooms, I know where the control room
23 is. But there's slices between. You know, there are
24 slices at certain elevation and I suspect that there's
25 something in between there that I'm not seeing, just

1 because of the way the slices were taken. So, I'm
2 still curious about that.
3 MR. REYNOLDS: Okay.
4 CHAIR STETKAR: That's a good point,
5 though. I will ask the staff about that.
6 MEMBER SHACK: Well, the staff is
7 referencing Rev. 3, which is a really interesting one.
8 Okay.
9 CHAIR STETKAR: 1189?
10 MEMBER SHACK: Oh, okay. One and three
11 but not 2.
12 CHAIR STETKAR: Well, but the transition
13 to two was a change -- you know, things like multiple
14 spurious operations and how you have to consider
15 those.
16 MEMBER SHACK: Right. Again, the DCD
17 references the NEI document and Rev. 2 has a rather
18 substantial --
19 CHAIR STETKAR: It does reference --
20 MEMBER SHACK: Yes.
21 CHAIR STETKAR: -- because we're on --
22 not on hotwire.
23 MEMBER SHACK: Yes, it referenced.
24 Again, that's really left to the COL Applicant to do.
25 But it references that document as the basis for the

1 COL Applicant's analysis.

2 CHAIR STETKAR: And that does treat the

3 multiple --

4 MEMBER SHACK: Rev. 2 has some

5 reservations about the NEI document --

6 CHAIR STETKAR: Rev. 2 of the Reg. Guide-

7 -

8 MEMBER SHACK: Right. Right.

9 CHAIR STETKAR: But it doesn't

10 reservations in the --

11 MEMBER SHACK: And I don't know when the

12 COLA submitted its application, so --

13 CHAIR STETKAR: Well, we'll sort that

14 out.

15 MR. CURRY: All right. To finish up with

16 9.5; 9.5.2 to 9.5.8 I'd like to introduce Mr. Hideki

17 Tanaka who is our technical expert in this area -- in

18 these areas. So, back on the original slide, I'm not

19 going to try to go back to that, but it indicated that

20 9.5.1, 9.5.2, 9.5.3 they're not safety-related

21 functions. The support system for the gas turbine

22 generators do have safety-related functions.

23 So where Mr. Reynolds left off, we'll

24 pick up, I think, on 9.5.2 Communications Systems.

25 There are a variety of communications capabilities

1 outlined in the DCD and fundamental ideas that
2 there'll at least be two methods of communicating with
3 outside agencies and internal to the plant provided by
4 all of these different mechanisms which I'm sure the
5 Committee is familiar with.
6 So, I will move on to lighting systems.
7 Yes, sir?
8 MEMBER BROWN: This is the first time
9 I've ever asked this question in the light of this
10 particular discussion, because I didn't think of it;
11 the communications issue. You list a whole list of
12 them here, and this is not unusual for the other tank
13 designs. But in terms of the connection of offsite
14 communication system is it possible for somebody
15 offsite to commandeer a communication system, hack it,
16 and make onsite announcements the way your all system
17 is configured?
18 MR. CURRY: I don't know.
19 MEMBER BROWN: Well, I mean if you look
20 at it from a telephone system that goes to a
21 telephone. I'm talking about the public address type
22 system or the offsite communication, or plant radio
23 systems that could be compromised. It's not hard to
24 hack into radio systems so if could have some guy out
25 there giving counter- information that was done -- I

1 just threw that out. It just occurred to me.
2 MR. CURRY: Let me --
3 MEMBER BROWN: I'm not asking you. That's
4 totally off-the-wall.
5 MR. CURRY: Yes, that was a sabotage-type
6 question which I'm not sure that --
7 CHAIR STETKAR: It is. It is.
8 MEMBER BROWN: It's different from cyber
9 because it's not on the computer, necessarily.
10 MR. CURRY: True.
11 MEMBER BROWN: Unless you've got Verizon,
12 which you don't know what's going to happen. Oh, I'm
13 not supposed to say that.
14 MR. CURRY: It's okay. They're find your
15 phone number.
16 MEMBER BROWN: Anyway, it'd be
17 interesting to have some idea of the independence of
18 the ability to communicate public address system-wise
19 from offsite, insite and/or the radio system. The
20 telephone system is kind of commercial, I imagine.
21 CHAIR STETKAR: We just may need to be a
22 little bit careful because we're getting into that
23 gray area --
24 MEMBER BROWN: I understand that.
25 CHAIR STETKAR: -- if you know security-

1 related stuff. But we can --

2 MEMBER BROWN: I'm just putting it on the

3 table for discussion at the appropriate time.

4 MR. CURRY:

5 MR. KLINE: Thank you. We'll note that

6 comment.

7 MEMBER BROWN: I knew that would be

8 appreciated.

9 MR. CURRY: All right. Lighting systems.

10 Lighting nonsafety-related system. We've got normal

11 lighting, emergency lighting, emergency lights divided

12 up into those three subsets, including the third

13 bullet titled "Normal/emergency lighting. But that's

14 intended to be all lighting except the Main Control

15 Room and the shutdown area.

16 So, as you would expect, normal lighting

17 is non-Class 1E, emergency lighting --

18 MEMBER BROWN: Let me backtrack.

19 MR. CURRY: Sure.

20 MEMBER BROWN: Because when you get to do

21 Chapter 7 this next question will come up, and you

22 might as well be aware that I will be asking the

23 question then. This is on your Slide 8 where you talk

24 about communications between the MCR and the Technical

25 Support Center and the Offsite Emergency Operations

1 Facility. When you were describing the overall
2 architecture, and you may not be doing it but
3 somebody will be, of the I&C system, how that
4 communicates between what I call plant MCR/TSC complex
5 and what I call the business or corporate entity
6 that's at the site also will be of interest. That's
7 talking about the firewalls and things.
8 MR. CURRY: That's right.
9 MEMBER BROWN: And I know that goes into
10 a little bit a cyber, but there's still some questions
11 that can be asked in that vein without venturing into
12 the whole cyber security plan. So, I'm just giving
13 you a heads up or I've giving Mitsubishi a heads up --
14 MR. CURRY: Somebody.
15 MEMBER BROWN: -- that questions will be
16 forthcoming.
17 MR. CURRY: Right. And again, the
18 relationship and the independence of the onsite
19 communication system from offsite sources?
20 MEMBER BROWN: Yes, right. I mean data
21 moving from the site systems to other. And I'm not
22 going to go any farther until we see the architecture
23 layout.
24 MR. CURRY: Yes.
25 MEMBER BROWN: I mean I took a look at it

1 real quick and it wasn't real crisp as to all that.
2 Just one of your diagrams kind of very high level.
3 MR. CURRY: Okay. I think we understand
4 the issue.
5 MEMBER BROWN: Thank you.
6 MR. CURRY: Yes. All right. Lighting,
7 again, just to -- and we were on the quick summary of
8 the lighting and the emergency lighting. And I think I
9 was down to the last bullet, the normal/emergency
10 lighting is backed up by the alternate ac power
11 source.
12 If we talk about the gas turbine gas-
13 generator support system, fuel oil storage and
14 transfer, I should have mentioned I think -- well,
15 we'll get to that. 9.5.5 is not applicable because
16 the GTGs are approved, so we won't be discussing
17 9.5.5.
18 The 9.5.4, you know basically is a
19 summary of the fuel oil storage and transfer system.
20 And as you see, typical components. Here's your
21 simplified drawing that follows. We have a fuel oil
22 storage tank, seven day tank with a day tank for 1.5
23 hours. Redundant fuel oil transfer pumps supplying
24 each GTG set.
25 MEMBER BLEY: Because they're powered off

of their own GTG, the transfer pumps?

MR. CURRY: The transfer pumps? Tanaka-san.

MR. TANAKA: The transfer pumps is separated from own trained.

MEMBER BLEY: Untrained? So that -- okay.

MR. TANAKA: Yes, sir.

MEMBER BLEY: So if the generator is working, you got power for the pump?

MR. CURRY: Starting system, starting air system criterion is less than 100 seconds.

CHAIR STETKAR: Jim, I'm sorry.

MR. CURRY: Sure.

CHAIR STETKAR: Could you go back to the drawing there? Are the fuel oil storage tank rooms, they're below grade, right? Are they sealed against flooding?

MR. TANAKA: Yes. Underground.

CHAIR STETKAR: They're underground now. Are they completely sealed against flooding?

MR. TANAKA: Yes.

CHAIR STETKAR: The answer is yes? Okay. Thank you. Concern being, obviously, that they're electrically driven pumps that have to work to support

1 the combustion gas turbine. So if the room is full of
2 water, it's not so good, unless they're really good
3 pumps.
4 MEMBER SHACK: Hermetically sealed
5 generators.
6 CHAIR STETKAR: Well, no. I mean the
7 generators can be above flood level. If you fill up
8 the generator rooms until the day tank is dry, and
9 then it starts to really --
10 MR. CURRY: Okay. Starting air, the
11 capacity -- and I should mention this all is related
12 to the Class 1E GTGs, and there are four of them.
13 Starting air capacity, three consecutive
14 GTG starts. Each system consists of air compressors
15 and the associated drain chambers and receivers and
16 staging. And there's a little schematic.
17 MEMBER SHACK: Is there some reason you
18 chose not to meet the SRP requirements for five
19 starts?
20 MR. CURRY: We think we do. And we have
21 some explanation for that.
22 I will point out we have four, four gas
23 turbines as opposed to diesel, so fundamentally that's
24 where the answer lies.
25 MEMBER SHACK: Okay.

1 MR. CURRY: Okay?

2 CHAIR STETKAR: I think we did have some
3 discussion with that back in Chapter 8. I don't
4 remember the answer, but I know there was some
5 discussion. The staff asked it. There was some
6 discussion about, you know, why 3 is good enough.

7 MEMBER SHACK: Okay. So we've been
8 there.

9 CHAIR STETKAR: So I think we've been
10 there.

11 MR. CURRY: All right. Lubrication.
12 Lubrication system is explanatory. Probably the
13 interesting bullet might be the last one: We do not
14 need a keep-warm system because the lube oil is
15 qualified under cold conditions.

16 CHAIR STETKAR: How cold is cold? How
17 cold? What temperature?

18 MR. TANAKA: Minus 20C.

19 MR. CURRY: Fahrenheit?

20 MR. TANAKA: Huh?

21 CHAIR STETKAR: Minus 20C is about what?
22 Minus 15 Fahrenheit?

23 MEMBER BLEY: That's about minus 5.

24 CHAIR STETKAR: Maybe minutes 5. Yes,
25 about minus 4 or 5.

1 MR. TANAKA: But actually lubrication
2 system is contained in the -- is kept by the --
3 CHAIR STETKAR: Okay. Right, right,
4 right.
5 MEMBER SHACK: Minus four.
6 MEMBER BLEY: Minus four. I'm sorry.
7 CHAIR STETKAR: Okay. I'm sorry. It's
8 all installed in the gas turbine generator room,
9 right? Thank you.
10 MR. CURRY: And there's your simplified
11 schematic.
12 Air supply. Typical air supply system.
13 Conventional air and exhaust system, screens, louvers,
14 ventilation fans, duct work connections.
15 And that is the end of our presentation
16 for 9.5.
17 CHAIR STETKAR: Excellent. Do any of the
18 members have any other questions, comments for MHI?
19 We're waiting.
20 MEMBER BROWN: Can we go all the way back
21 to the beginning?
22 CHAIR STETKAR: Yes. You have even less
23 of a life than I do. This is great.
24 MEMBER BROWN: While I was multi-tasking
25 while I didn't know what you all were talking about,

1 or even less than what you all were talking about --

2 CHAIR STETKAR: Let's go back to the

3 beginning.

4 MEMBER BROWN: The water level gauges and

5 the temperature gauges, I should put under either

6 RAI--

7 CHAIR STETKAR: Spent fuel --

8 MEMBER BROWN: Spent fuel all the way

9 back -- way back to the beginning. This is all the

10 way back to the beginning of time. And I just

11 wondered, there seemed to be some inconsistencies or

12 differences between the original design and the change

13 you made as a result of the RAI. And then as a result

14 of those changes, then you changed the DCD Tier 1 and

15 Tier 2 sections appropriately, and there's some

16 inconsistencies there. So, I thought I'd ask a couple

17 of questions.

18 Number 1, before there were two level

19 gauges, I'll talk about level first, and they

20 annunciated a high-low and low-low water level from

21 the MCR locally. That's what you all said in your

22 answer. That's not explicitly stated in the DCD, but

23 that is what you all said in your answer.

24 The new thing, instead of two level

25 gauges, you say you're going to have two level

1 switches to provide a low-low setpoint which will
2 annunciate to the MCR locally. So I presume the gauges
3 that monitor level have disappeared and now you just
4 have a low-low level alone, which also not only
5 annunciate, it also interlocks with the SFP pumps, the
6 spent fuel pumps to trip them off or to prevent their
7 starting if the water level is down there?
8 Okay. Just a difference. No gauges, and
9 you put a local, which sounds like a local nonsafety-
10 related, continuous monitoring gauge. And I presume
11 that's in the spent fuel pool area. And it measures
12 the rounds of levels, but it didn't appear to be that
13 you had any MCR, Main Control Room indication on that.
14 It wasn't clear.
15 MR. CURRY: So just to repeat, we have an
16 action item from this morning to clarify the level and
17 the temperature indication. And you're pointing out
18 that there's maybe an inconsistency in our --
19 MEMBER BROWN: Yes, and I'm going to
20 mention a few other ones --
21 MR. CURRY: Okay.
22 MEMBER BROWN: -- just to -- and if we're
23 going to clarify it at some point, I thought we
24 might--
25 MEMBER SHACK: Clarify it all?

1 MEMBER BROWN: Pardon?

2 MEMBER SHACK: Yes, clarify it all
3 instead of doing it twice. Okay. So that's just on
4 the level gauges. And I know I went faster than you
5 could write, so don't worry; I wrote this all down.

6 MR. CURRY: Okay. Appreciate that.

7 Yes. I was just going to ask you for the
8 references on the two items.

9 MEMBER BROWN: The RAI is 756-5763
10 Revision 3, dated August 10th. And that's your alls
11 response to the -- your alls response is August 10th.

12 MR. CURRY: Of 2011?

13 MEMBER BROWN: Yes, 2011.

14 MR. CURRY: Okay.

15 MEMBER BROWN: And it has all the other
16 detail as well as the original RAI in it, plus the
17 Tier markups for the Tier 1 and Tier 2 pages.

18 MR. CURRY: Okay.

19 MEMBER BROWN: Okay? So that's on the
20 level.

21 The second thing was on the temperature
22 gauges you went from one temperature gauge to two
23 temperature gauges Class 1E. Okay. My question on
24 that was related to: Where are they?

25 MR. CURRY: Right.

1 MEMBER BROWN: Are they distributed
2 within the pool somehow such that you can -- I mean,
3 if they're both stuck in the same, it's kind of
4 useless.
5 MR. CURRY: That's right. And we
6 discussed and are pulling some detail on this.
7 MEMBER BROWN: Yes, that was the part of
8 that question.
9 MR. CURRY: Right.
10 MEMBER BROWN: The level gauges where
11 water goes up and down, so I wasn't -- maybe I should
12 be worried about that, but I wasn't.
13 CHAIR STETKAR: Well, the only question
14 that comes up is if they only alarm at low-low level,
15 you know what is low-low level?
16 MEMBER BROWN: The cavitation point.
17 CHAIR STETKAR: Yes, that's pretty high
18 level --
19 MEMBER BROWN: The cavitation.
20 CHAIR STETKAR: -- pretty high level in
21 the pool. It's not a continuous --
22 MEMBER BROWN: I don't know where the
23 pumps take suction, so --
24 CHAIR STETKAR: Pretty high up.
25 MEMBER BROWN: Well, that's the other

1 point I hadn't gotten to yet. They do have a -- there
2 is a topical report for the thermal hydraulic analysis
3 that says without -- boil in about 2½ hours.
4 MR. CURRY: Okay.
5 MEMBER BROWN: So, that's a number.
6 CHAIR STETKAR: That's for the Design-
7 Basis heat load ten years worth of spent fuel --
8 MEMBER BROWN: Whatever it is, yes.
9 CHAIR STETKAR: -- and full core offload.
10 But, yes, I remember that number.
11 MEMBER BROWN: But they also apparently
12 trips -- the ECCS system trips the SFPs off, the load
13 sequencer does, and it does not restart them. They
14 have to be restarted manually. I have no idea what we
15 do in other plants, but I don't know if that's
16 consistent or not. The loss of offsite power trips
17 then on under voltage, that's kind of obvious. But
18 then the low-low setpoint locks out. And I guess my
19 concern, because it's interlocked. Now, I'm to come
20 with an interlock, per se, because you obviously don't
21 want to burn up the pumps if you can help it before
22 you have water back in there that you can do something
23 with, but if you have an interlock failure of -- you
24 ought to be able to override some types of interlocks.
25 And whether that's done manually or how that's

1 accomplished, but you ought not be permanently locked
2 out.
3 CHAIR STETKAR: Charlie, you're reading
4 or you have something that I don't think I've seen.
5 MEMBER BROWN: Well, this is the RAI.
6 CHAIR STETKAR: Yes. You used the term
7 "locks out." Is that --
8 MEMBER BROWN: Used the term interlock.
9 CHAIR STETKAR: An interlock? Okay.
10 MEMBER BROWN: Okay. And when I read an
11 interlock, to me that's an interlock for the pumps.
12 It turns it off. If you're running the pumps and the
13 level goes down, it interlocks them in, turns them off
14 and they use the term "interlock" in here. So I
15 presume an interlock means it's interlocked, you can't
16 start them if the load is below that. And they don't
17 talk about an override.
18 CHAIR STETKAR: Well, yes.
19 MEMBER BROWN: What if the interlock
20 fails, you get water pump back in and now you want to
21 run it but you can't start them? That's the point.
22 MR. CURRY: Right.
23 MEMBER BROWN: In one of your paragraphs,
24 someone tends to look at one of your answers, it was
25 on the discussion of the operational -- during the

1 loss of offsite power the pumps trip off. Then you go
2 through a scenario of 2½ hours and what it needs to
3 do to restart them. And you talk about when the level
4 is -- of the low level alarm setpoint, not a low
5 level. And it looks like low-low and high have all
6 been water level -- it looks like they've disappeared.
7 They were in some of your previous discussions, but
8 not in the revised one.
9 So I'm just saying you ought to go --
10 somewhere along the line you and the staff ought to
11 come to congruence as to consistency as to
12 consistency. And I don't know if this has been
13 resolved yet or it's still an open.
14 CHAIR STETKAR: We'll ask the staff when
15 they come in.
16 MEMBER BROWN: Yes. Because it's just a
17 matter of getting consistency. I mean, I kind of
18 piddled around with this and since I was interested in
19 it while we were talking.
20 CHAIR STETKAR: Yes. So, Jim, kind of
21 what I've taken away, there's kind of an open issue
22 and we'd kind of at a high level we'd like to
23 understand details. But if I can characterize it at a
24 high level, we'd like to understand how the level
25 instrumentation, you know the current concept of the

1 design, how it's designed, what signals does it
2 provide, does it provide continuous displays, where
3 are those displays and how do the trip and interlock
4 signals for the spent fuel pit cooling pumps interact
5 with those levels? In other words, does the low-low
6 level signal -- or whatever it is, trip and lock out
7 the pump, do the operators have to reset that signal,
8 does it reset automatically at some other level, what
9 is it? So basically, the kind of design of those of
10 those level signals and what they do.
11 And, you know less complex, but for the
12 temperature signals at what places in the spent fuel
13 pit are those temperature measurements taken?
14 MR. CURRY: Yes.
15 CHAIR STETKAR: Are they somewhat
16 representative?
17 MEMBER BROWN: There was one other.
18 Again, this might just be editorial. When you talked
19 about a revision piece in Tier 2 DCD describing the
20 temperature instruments, you talk about two
21 temperature instruments are installed. If it's high,
22 they would annunciate it to MCR and locally. Then
23 you use singular temperature transmitter is provided
24 to monitor the temperature. Does that different? Are
25 the other ones just alarm units only? For some reason

1 you got one that's monitoring over the range? I just
2 couldn't -- it's just inconsistency in terminology.
3 That's why we really would like to know what are the
4 ranges. Are they all continuous, whether they display,
5 et cetera? And it's a little bit cryptic as you try
6 to dig through the tables and stuff; that's all.
7 MR. CURRY: Yes. Thank you. I appreciate
8 that.
9 And just to clarify, the inconsistency in
10 terminology within the RAI response or are you
11 comparing to some other --
12 MEMBER BROWN: I'm comparing here. What
13 you all -- you're very clear. Okay. Your answer went
14 through a discussion of what you had and what you were
15 going to change to in the discussion. Then you
16 provided an impact on DCD write-up which showed what
17 changes you were going to do to the DCD to incorporate
18 your discussion part of the write-up of what you're
19 going to do. So, there's some inconsistencies between
20 them, and it looks like you went from level gauges to
21 just level switches. And there's only one local
22 continuous monitor, and that's in the spent fuel pool
23 within the reactor building.
24 CHAIR STETKAR: I mean, some of it if we
25 had a better understanding of what the current design

1 really looks like, some of that might --

2 MEMBER BROWN: And my personal interest

3 is that we get something laid down fairly concretely

4 so that two different people looking at the designs

5 can interpret it such that you don't end up with what

6 we really thought we were getting in the end. So, you

7 don't have to say what they are, but what are they

8 supposed to do and how many of them, and where are

9 they. Okay. And where they indicate and annunciate,

10 et cetera.

11 So, that was overall -- thanks for

12 bearing --

13 CHAIR STETKAR: You want to go to like

14 page 2 now?

15 MEMBER BROWN: No, that's it.

16 CHAIR STETKAR: Any other comments,

17 questions by any of the Members? If not, I like to

18 thank MHI, MNES and Holtec in their absence for what I

19 think a really, really good discussion. Good

20 presentation. We'll probably have more discussion

21 late, you know tomorrow if we get some of the

22 questions answered in kind of a real time.

23 But I'd like to thank you very much. I

24 thought it was a well structured presentation, and I

25 think we had a good discussion.

1 And we will recess until 3:05, and then
2 hear from the staff.
3 (Whereupon, at 2:49 p.m. off the record
4 until 3:08 p.m.)
5 CHAIR STETKAR: We are back in session.
6 It's time to hear from the staff.
7 Paul?
8 MR. KALLAN: Okay. Thank you.
9 My name is Paul Kallan, again.
10 CHAIR STETKAR: I'm sorry. Do we have
11 your handouts? Thank you.
12 MR. KALLAN: All right. Now this is the
13 presentation to the Subcommittee on Chapter 9 for the
14 Safety Evaluation with open items.
15 Just quickly, the staff team it's the
16 staff that will be presenting today is Larry Wheeler,
17 and he's a reactor systems engineer. He'll be going
18 over 9.2.1 and 9.2.2.
19 Angelo Stubbs, he's a senior reactor
20 systems engineer and he'll be going over DCD Section
21 9.2.6.
22 And David Nold, he's a reactor systems
23 engineer and he'll be going over Sections 9.4.1 and
24 9.4.5.
25 The Lead Project Manager is Jeff Clocco,

1 and he's not here today. And I'm just basically
2 running the show.
3 Slide 3 and 4 is just the staff team.
4 There's a large number of staff that worked on this
5 document. And so I just listed them all in there.
6 Slide 5 is a table that basically what I
7 did is I put the SRP, the section, the number of
8 questions and the open items that related. And I think
9 I'm not going to go over each section, but I just
10 wanted to make sure that we listed all the sections
11 with the open items and the questions, the amount of
12 questions we get for each section.
13 There was approximately on Slide 10, we
14 had 603 questions and 20 open items. We decided that
15 staff wanted to only talk about certain significant
16 open items which we're going to be presenting today
17 that were of interest to the ACRS. And we're not going
18 to go over all 20 of them.
19 And with that, I'm going to go to Slide
20 11 and turn it over to Larry Wheeler.
21 CHAIR STETKAR: Actually, Larry, no
22 you're not. Because you're not going to skip over the
23 fuel pool stuff, but we -- at least I have some
24 questions about it. So, I hope you have somebody here
25 to answer them.

1 In SER Section 9.1.3.4 under GDC 61
2 there's a statement that says DCD Tier 2 Section
3 9.1.3.1 Design Basis states that the spent fuel pool
4 pit -- I'm sorry, cooling system is designed to
5 maintain the water temperature below 48.9 degrees C,
6 120 degrees F with a newly operated half core and a
7 fully loaded spent fuel pool with a single active
8 failure preventing the use of one cooling train. With
9 the additional capacity the residual heat removal
10 system an entirely newly off loaded core can be
11 handled without the water temperature rising above 60
12 degrees C, 140 degrees F. This also accounts for the
13 possibility of a single active failure, therefore the
14 spent fuel pool cooling system design meets the
15 recommendations of SRP Section 9.1.3(iii)(1)(D).
16 And I'm not going to do the quote from
17 the DCD because that's even longer. But if I read the
18 DCD and read your statement, they're not consistent.
19 And the reasons that they're not consistent are that
20 the DCD seems to say that with a fully loaded spent
21 fuel pit and the head load from a newly off loaded
22 partial core, it can maintain -- the spent fuel pit
23 cooling system can maintain spent fuel pit temperature
24 at 140 degrees with a single active failure. You say a
25 120.

1 And I'm not sure about the other
2 conditions with full core.
3 So, I'm curious about whether the
4 conclusions of your analysis about what a single
5 active failure is and what the temperature would be,
6 because the statements in the DCD and the statements
7 in the SER don't seem to be consistent. Now I'm not
8 concerns about boiling here, but I'm concerned about
9 is there a consistent understanding of the conditions.
10 And quite honestly, I had to craft myself a little
11 table that said if I have a half core or a full core
12 and how many trains of spent fuel pit cooling system
13 do I have running, what is the resulting temperature.
14 And from the DCD I get one train of spent fuel pit
15 cooling, what half core gives me 140. You say 120.
16 And then I'm not sure under the full core conditions
17 what a single failure means because I'm not quite sure
18 how many trains are RHR and core spray are accounted
19 for.
20 So, I'm not sure if you have anybody here
21 to address that part of the --
22 MR. HERNANDEZ: I'm really here from the
23 spent fuel pool.
24 CHAIR STETKAR: Give your name first.
25 MR. HERNANDEZ: Yes. My name is Raul

1 Hernandez.

2 You gave a lot of quotes there, so I'm

3 going to ask you in a break give me the exact system

4 failures, the exact areas of your scenario, so I can

5 look it up and give you a straight answer.

6 CHAIR STETKAR: Yes. Let me give it to

7 you on kind of the record here. It's Section 9.1.3.4

8 of the SER. Because my recollection is that that's a

9 long section. It's under GDC-61. And the

10 corresponding section of the DCD is .1.3.1.

11 MR. HERNANDEZ: Okay.

12 CHAIR STETKAR: And so you may want to go

13 look at those.

14 MR. HERNANDEZ: Basically right here

15 we're talking about the normal offload scenario, that

16 one is the partial offload --

17 CHAIR STETKAR: Okay.

18 MR. HERNANDEZ: Maybe you weren't here

19 when we discussed the full core of load we consider

20 like the abnormal emergency scenario.

21 CHAIR STETKAR: That may be the way you

22 think about it, but this morning I asked MHI the

23 question about what is the practice in Japan, and

24 currently the practice of many plants in the United

25 States is for every refueling outage they offload the

1 whole core. So therefore, the normal condition is a
2 full core sitting in the spent fuel pit for some
3 period of time.
4 MR. HERNANDEZ: And many designs are like
5 that, but the way it was presented on the DCD the
6 normal offload is like partial, the way that it was
7 presented in the DCD.
8 CHAIR STETKAR: Okay. I guess we need to
9 get clarification of that because I don't think it
10 makes any difference -- I don't know. I mean, in terms
11 of decisions about adequacy of cooling systems, except
12 for the fact that it's fairly clear that if you have a
13 full core offload, you need to supplement the cooling
14 with at least one train of contain the spray RHR.
15 MR. HERNANDEZ: Yes.
16 CHAIR STETKAR: So that enters the mix.
17 Apparently the normal spent fuel pit cooling system,
18 even with both trains, I don't know what the
19 temperature is with the full core offload. And if,
20 indeed, the normal practice will be to offload the
21 full core during every refueling outage, those then
22 become the normal success criteria for the compliment
23 of cooling systems. Follow me? I mean if that's the
24 way the plant will do business is to offload the full
25 core, that in my mind is the normal way to offload.

1 Okay.

2 MEMBER BROWN: Which part of the DCD did

3 you read?

4 CHAIR STETKAR: 8.1.3.1.

5 MEMBER BROWN: Well, I looked at

6 9.1.3.3.1 and it looked like that was maybe even

7 inconsistent within the DCD. But --

8 CHAIR STETKAR: I didn't try to look for

9 consistency within the DCD.

10 MEMBER BROWN: Yes. It says in case of a

11 single SFPS cooling system failure, one SFPS pump and

12 one heat exchanger in service will maintain a

13 temperature below 140 with a half core offload. That's

14 with one spent fuel --

15 CHAIR STETKAR: And that's what I got.

16 Sorry.

17 MEMBER BROWN: Then it goes on with a

18 full core offload you have to have one train plus two

19 RHRs or two trains and one RHR --

20 CHAIR STETKAR: Right.

21 MEMBER BROWN: -- at 140.

22 CHAIR STETKAR: Right.

23 MEMBER BROWN: So the numbers stayed the

24 same, whereas if you look the SER they had a number

25 like 124 or --

1 CHAIR STETKAR: Right. The DCD, as far
2 as I could tell, hung together consistently. It was
3 the SER's quoted configuration and temperatures didn't
4 seem to --
5 MEMBER BROWN: For the half core looked
6 to be --
7 CHAIR STETKAR: For the half core seemed
8 to be low and --
9 MEMBER BROWN: But they didn't use just
10 the -- they said "a newly" -- that's where the SER was
11 fuzzy. So it says "Designed to maintain water
12 temperature below 120 with a newly offloaded half core
13 and a fully loaded SRP with the single failure." And
14 the DCD didn't talk about a fully loaded SRP. It just
15 talked about a --
16 CHAIR STETKAR: Well, all the conditions
17 are done with a fully loaded --
18 MEMBER BROWN: Okay. It just stated --
19 CHAIR STETKAR: That's ten years of spent
20 fuel, basically plus whether you have the half core
21 MEMBER BROWN: That's fine. That just
22 quoted the standard assumption then.
23 CHAIR STETKAR: Anyway, if you could go
24 back at that. The key is a single failure of what and
25 what temperatures apply under what core loading, you

1 know fuel pit loading conditions.

2 As I said, it's not a concern in terms of

3 fundamental safety. It's a concern of making sure

4 that the staff and the applicant are both

5 understanding all of these combinatorics accurately.

6 MR. HERNANDEZ: Yes. It's not a limiting

7 condition, but it's a consistency issue, I understand.

8 CHAIR STETKAR: Right. Right. Okay.

9 Let's see. Do I have any more on -- yes,

10 I do.

11 MR. KALLAN: Do you have any other

12 questions?

13 CHAIR STETKAR: Yes, I do and I'm not

14 sure -- you know, this is curiosity. There was a

15 confirmatory item. Charlie brought it up earlier and

16 I was going to wait to ask you.

17 We know that the spent fuel pit cooling

18 pumps are not automatically reloaded onto the Class 1E

19 buses. They must be loaded manually. And apparently

20 under the design loading conditions, apparently

21 there's a time window of about 2.7 hours to restore

22 spent fuel pit cooling before you start to boil

23 starting from the minimum level conditions.

24 And there's a confirmatory item, 8.1.3-8

25 that apparently addresses sort of design related

1 things.

2 I don't see any COL information items,

3 and I don't know how those things work about specific

4 procedural guidance so that the operators know that

5 they need to do this. And the reason this is

6 curiosity is I don't know what level of -- I know the

7 plant has to develop emergency operating procedures.

8 I'm presuming that they would capture this, but

9 sometimes presuming is dangerous.

10 MR. HERNANDEZ: This item came about of

11 having a lost of offsite power coincident with a LOCA.

12 That was the condition that initiated this scenario.

13 You have a LOCA and a loss of offsite power at the

14 same time. That's more than the sequencing for the

15 ECCS kicks in and the spent fuel pumps were not in

16 that sequence. That was exactly the thing.

17 I'll ask the applicant on a RAI to

18 clarify why the pumps were not loaded --

19 CHAIR STETKAR: Yes.

20 MR. HERNANDEZ: -- in the sequence and

21 they credit the -- it's not a timing issue. There is

22 plenty of time; that's where you see the two hours for

23 maximum heat load. And then we asked them if that's

24 the approach that we're going to take, that they get

25 plenty of time, how are they monitoring the

1 conditions? And that's where they upgraded the
2 temperature and that would indicate a --
3 CHAIR STETKAR: Safety redundancy.
4 MR. HERNANDEZ: -- a safety redundant
5 level.
6 In the RAI response they mentioned that
7 the operator in the control room checks the level on
8 the spent fuel pool before initiating the pumps again.
9 If makeup is needed, they can initiate that from the
10 spent fuel pool.
11 The description of the procedure is, it
12 wasn't lengthy or complicated, it was simply a couple
13 of actions. But I understand why you're asking that.
14 CHAIR STETKAR: Yes, and a couple of
15 questions since you've obviously looked at this in
16 more detail than I have. Is it only under the, let's
17 call it a LOCA plus loss of offsite power condition
18 where the spent fuel pit pumps are not reloaded? In
19 other words, suppose I just have a loss of offsite
20 power? Are the spent fuel pit pumps reloaded onto the
21 gas turbines for only a loss of offsite power?
22 MR. HERNANDEZ: It's my understanding
23 that they are, yes.
24 MEMBER BROWN: And again, that's not
25 clear from reading the --

1 CHAIR STETKAR: Can I get somebody from
2 MHI to confirm that?
3 MR. HERNANDEZ: They are powered from a
4 Class 1E power, so it's just in the scenario that it
5 wasn't that they specified that they had this loaded
6 sequence in the spent fuel pool --
7 CHAIR STETKAR: Okay. They had a couple
8 of loaded sequences.
9 MEMBER BROWN: Okay. You're in loss of
10 offsite power, the SFP pump will trip under the LOCAs
11 and then will not be automatically reactuated by the
12 sequencer?
13 CHAIR STETKAR: That would be pretty
14 clear. Thank you. So therefore, I don't care about
15 the coincident LOCA. I care about anytime I lose
16 offsite power, I lose --
17 MEMBER BROWN: But there's that point:
18 There was an inconsistency between the DCD --
19 CHAIR STETKAR: Yes.
20 MEMBER BROWN: -- within the DCD and they
21 clarify that and they came back and said "Oh, no.
22 This is the way it is. And so they rewrote it and that
23 was the proposed change to 9.1.3.3.1
24 CHAIR STETKAR: Okay.
25 MEMBER BROWN: And also the ECCS also

1 trips them off in the load sequence.

2 CHAIR STETKAR: Yes, I mean that makes

3 sense.

4 MEMBER BROWN: The header for loss of

5 offsite power didn't make a lot of sense.

6 CHAIR STETKAR: So now I understand, you

7 know when they don't work and I understand that we

8 have safety-related instruments. My question is I

9 don't know because I haven't been through enough of

10 these at what level -- what trips the staff concerns

11 about COL information items? In other words, there

12 are no EOPs for this plant. The EOPs are the

13 responsibility of the COL Applicant.

14 One can take the approach of presuming

15 that people write the EOPs perfectly or one can flag

16 things that ought to be considered by the COL

17 Applicant. And I don't know what the staff does in

18 those issues.

19 In other words, simply have safety-

20 related instrumentation, simply having the ability to

21 close a switch, everybody always likes to take credit

22 for the operators always doing a perfect thing at the

23 perfect time because they have perfect information and

24 perfect knowledge. We know better now. They don't,

25 unless they have training procedures to tell them that

1 they ought to be concerned about these functions.
2 So I think what I'm asking from the staff
3 is ought there be a COL information item to flag the
4 fact that instructions for restoration of spent fuel
5 pit cooling should be integrated into their emergency
6 operating procedures, or is that simply a presumption?
7 MEMBER BROWN: Well, with the change in
8 the level indication there's only one level
9 indication. The others ones are switches now as
10 opposed to gauges. So I don't know how the Main
11 Control Room operators is going to know unless there's
12 somebody out in the reactor building, if that's where
13 it is. That's why we've asked for the clarification.
14 So all we've got is the annunciator
15 having told him there's him there's a low-low level
16 alarm. It's not on, so you can manually restart the
17 pump if he knows to do it.
18 CHAIR STETKAR: If he know to do it?
19 Okay. Well, I'm not hearing anything
20 back, so I'll just -- and I'm not necessarily
21 proposing that -- you know, we don't propose
22 anything. I'm just sort of raising the generic
23 question that as you go through these reviews and you
24 identify in this case a function that relies
25 completely on operator action, is it the presumption

1 that the procedures will know that and take care of
2 that simply because people say "Well, it's really easy
3 to do" and they'll have a lot of indications
4 available, and there's a couple of hours available to
5 do it? And that's kind of a generic question to the
6 staff.
7 MR. HERNANDEZ: I don't have an answer
8 for you right now.
9 CHAIR STETKAR: I think the point has
10 been made.
11 This is kind of a minor thing, but again
12 it's a question about kind of consistency. This talks
13 about there is some concerns about the time and
14 capability to clean up the spent fuel pit and the
15 RWSP. And apparently this comes back to, I guess
16 there's some 72 hour time limit required by ANSI/ANS
17 57.2 Sections 6.3.2.10. Something I'm intimately
18 familiar with, I guess.
19 So there is analyses done here that says
20 that the purification stream is designed for -- I'm
21 not going to quote the thing, but 265 gallons a
22 minute. And if you take the total volume of the
23 refueling water storage pit plus the volume of the
24 spent fuel pit, it says you can pump that water,
25 circulate the entire volume once in 64 hours. And then

1 the SER goes on to say that since there are two
2 independent streams, the entire system could be
3 processed in about 32 hours. And all of that is true
4 except for the fact that there is a pinch point in the
5 system where there is a single pipe where you come
6 back from the two purification streams, go through a
7 single pipe and then go back to the two refueling
8 water storage pit recirculation pump.
9 So, the question is is that pipe big
10 enough to actually pass twice the flow rate? If it
11 isn't, you know your assertions about 32 hours about
12 32 hours don't quite hold because they're not two
13 completely independent parallel trains. They are on
14 both ends of this single pipe systems.
15 So, I'm wondering if you thought about
16 it? It doesn't make any difference, because even with
17 a single train, you get under the 72 hour magic
18 number, which apparently is important.
19 MR. HERNANDEZ: That is --
20 CHAIR STETKAR: But if that 32 hours is
21 something that you used in your decision as confidence
22 of additional margin, that may be an artificial level
23 of confidence depending on the limitation flow through
24 that common line
25 MR. HERNANDEZ: I cannot answer that

1 question. That is reviewed by the Chemical Engineering
2 Branch, is a different reviewer who looks at that
3 aspect, at the purification portion of the system.
4 CHAIR STETKAR: Okay. Take that away.
5 I'm just searching for things where the SER may -- and
6 I want to make sure that the SER doesn't impart an
7 artificial sense of confidence or margin where that
8 margin may not be available. Okay.
9 IF you're looking at it, the reference
10 section of the SER is 9.1.3.4 under the chemistry
11 stuff. It's GDC 14 and 16. Okay.
12 Bear with e here. I've got too many
13 pieces of paper.
14 This again, there's statements, they
15 sound like petty things, but again these are public
16 documents that indeed express our level of
17 understanding and review. And in SER Section 9.1.4.4,
18 which is light load handling system, but it's in
19 particular reactor cavity sealed, and I don't know who
20 was responsible for that Apparently there's shuffling
21 going on. And while the shuffling goes on -- this
22 statement says "The staff evaluated the RAI response
23 and determined that the refueling cavity and connected
24 openings are designed with features that preclude the
25 rapid draindown of the reactor cavity. The staff also

1 determined that any refueling cavity leakage will be
2 less than the available makeup capability."
3 Now, the staff has made this
4 determination. I didn't find that statement anywhere
5 in the DCD, I looked for it; that's why I didn't ask
6 MHI.
7 I'd like to understand how you determined
8 that any, meaning any possible refueling cavity
9 leakage will be less than the available makeup
10 capability. I'd like to see the supporting analysis
11 for that.
12 You probably don't have it available, so
13 if you can find it, we'd like to see it.
14 MR. KALLAN: No.
15 CHAIR STETKAR: Well, it says "The staff
16 determined that any refueling cavity leakage," so you
17 must have looked at all the leakage pathways, the
18 possibility that they can be opened and compared them
19 to the makeup capability, and there must be some
20 justification for that. I'd like to see it, or
21 perhaps that statement is a bit overstating the real
22 world. Okay.
23 Let' see -- now, heavy load handling
24 system? Suddenly there's a sigh of relief and the
25 pitter-patter of feet running out the back.

1 And I had a question. The basic question
2 I had is that I think you had some question RAIs about
3 the scope of the heavy load handling cranes that were
4 evaluated. Initially, I think they talked about the
5 Polar Crane and the Cask Transfer Crane. And there
6 might have been one more, I've forgotten. And they,
7 indeed, you know added a number of local cranes'
8 place, whatever you want to call them, to that list
9 and addressed those.
10 The DCD tables specifically, and it's
11 Table 9.1.5-3 in the DCD addresses cranes in place
12 installed over safe shutdown equipment. And one of my
13 questions is in the SER, and this is the SER Section
14 9.1.5.4, there's constantly in my mind this question
15 about what our SSCs important to safety versus safe
16 shutdown equipment. In particular, I'll ask you I'm
17 assuming that there's a very large overhead crane in
18 the turbine building, and are there any SSCs important
19 to safety, not safe shutdown, not safety-related, but
20 SSCs important to safety in the turbine building that
21 could be damaged by drops from that crane?
22 MR. CURRAN: This is Gordon Curran from
23 Balance of Plant.
24 I think that was an open item that they
25 had earlier where they were discussing where you asked

1 if there was any safety-related equipment in the
2 turbine building, if that's what you're asking.
3 CHAIR STETKAR: No. I'm getting a little
4 broader than that because it's this notion of -- I did
5 ask that question, and I believe -- and I heard that
6 there is an open item on that. In some sense, I'm
7 asking about what is the -- you're going to quote
8 directly from the SER. In its response, dated May 25,
9 2009, MHI referenced UAP-HF-09260. "The Applicant
10 acknowledged the need for more detail on the cranes
11 and hoists installed where load drops could result in
12 damage to SSCs important to safety. Included in the
13 DCD is Table 9.1.5-3 Cranes and Hoists Installed over
14 Safety Shutdown Equipment identifying cranes and
15 hoists including their respective seismic category and
16 single failure proof status."
17 My question is, is important to safety in
18 the staff's mind equivalent to safety-related and
19 equivalent to safe shutdown?
20 MR. CURRAN: Safe shutdown equipment?
21 CHAIR STETKAR: Right.
22 MR. CURRAN: Yes. I was writing as if
23 there was no components that would be effected by a
24 drop -- excuse me. No safe shutdown equipment that
25 would be effected by the drop in the turbine building.

1 CHAIR STETKAR: Okay. Okay. I
2 understand that now. That's a bit different, though,
3 then there have been numbers of discussions about the
4 issue of SSCs important versus -- and for example some
5 safety-related equipment may not be considered safe
6 shutdown equipment. So we're really talking about kind
7 of three categories of equipment here.
8 Safe shutdown is typically something that
9 in a deterministic analysis somebody identifies as
10 this is my minimum compliment of equipment that's
11 required to achieve safe shutdown.
12 Safety-related has to with the -- you
13 know, it's actually a broader set of equipment that's
14 required to satisfy the Design-Basis Accident
15 Analysis.
16 And then I see this in several staff
17 reviews, is this issue of SSCs important to safety.
18 And the only reason I bring it up, it's not a
19 semantics issue; is that as part of the Design
20 Certification there will be developed a Design
21 Reliability Assurance Program. And that Design
22 Reliability Assurance Program will have a population
23 of SSCs in it. And those SSC are sometimes they're
24 called risk-significant, sometimes they're called
25 important to safety, but it's more than the safety-

1 related equipment. It's a set of nonsafety-related
2 equipment that's for a variety of quantitative and
3 qualitative issues that's determined to be important
4 enough to safety that it requires additional assurance
5 of its reliability, typically through the Maintenance
6 Rule PRogrma. And I want to be sure if, for example,
7 that there's something in the turbine building that
8 makes it onto that D-RAP list, do we then need to
9 worry about dropping really heavy loads onto it?
10 And I don't know. As I said, I'm not
11 familiar enough with how the whole review process
12 goes. But that's sort of the genesis of my question.
13 And I understand now a little bit about
14 what you were doing a little bit better. And I don't
15 know what the D-RAP list is yet, because I don't think
16 we've seen it and it may not exist yet.
17 So leave that as kind of a question. I'm
18 not sure how you approach that yet, because it's one
19 of these sort of integration issues that we don't
20 necessarily identify equipment that requires
21 additional scrutiny for its reliability, but then
22 ignore the fact that it might be damaged by other
23 things.
24 Okay. Let's talk about Essential Service
25 Water.

1 MR. WHEELER: Okay. 9.2.1.

2 Good afternoon. My name is Larry Wheeler
3 with the Balance of Fleet Branch. Let's talk about
4 9.2.1, Essential Service Water.

5 MHI previously described the ESW system.
6 That design included the conceptual design of the
7 four-trains of ESW, blowdown, strainer backwash
8 connected to a common safety-related header. One
9 isolation valve, the AOV-577 provided the safety-
10 related to nonsafety-related boundary to the
11 circulating water blowdown main header.

12 During the review of the Comanche Peak
13 COL application it was discovered that neither of the
14 COL Applicant nor the DCD Applicant had adequately
15 described the power supplies, the I&C logic, the
16 failures and effects analysis for this boundary. So
17 we kind of got on the phone, we talked about it and
18 decided that an RAI would go to MHI and DCD, and they
19 would evaluate the AOV-577 and give us additional
20 information.

21 CHAIR STETKAR: So essentially the DCD
22 owns that valve now, is that the way to understand it
23 or am I -- it's not quite that simple?

24 MR. WHEELER: I would say that the COL
25 Applicants determine whether that conceptual design

1 information applies to them.

2 CHAIR STETKAR: Okay.

3 MR. WHEELER: And then they get design

4 description.

5 CHAIR STETKAR: Okay. Okay.

6 MR. WHEELER: That's why I was hoping

7 that Comanche would pick this up. But during the

8 phone call --

9 CHAIR STETKAR: Yes, it's right at --

10 yes. I read that.

11 MR. WHEELER: Because that AOV is

12 described in the DCD under the thermal effects

13 analysis, it kind of drowns out the DCD.

14 CHAIR STETKAR: Yes. Okay. Okay.

15 MR. WHEELER: But then North Anna has

16 decided not to use that valve, so that's another

17 story.

18 CHAIR STETKAR: Okay. But essentially if

19 I understand it, you're saying that the functional

20 requirements for that valve if it exists, are

21 specified in the DCD?

22 MR. WHEELER: That's correct. It should-

23 -

24 CHAIR STETKAR: Whether or not somebody

25 actually uses the valve or has that configuration as

1 part of the COL --

2 MR. WHEELER: Because the DCD --

3 CHAIR STETKAR: -- but if they do have

4 something that looks like that, they need to meet

5 those functional requirements?

6 MR. WHEELER: The conceptual design I

7 believe.

8 CHAIR STETKAR: Yes, conceptual design.

9 Okay.

10 MR. WHEELER: That's all I have on 9.2.1.

11 I'm going to go on to 9.2.2. What I'd like to do, Mr.

12 Chairman is talk about 9.2.1 and 9.2.2, then talk

13 about some of the questions you had from the staff

14 from this morning. And then I can turn that on to

15 Angelo.

16 CHAIR STETKAR: Okay. I know you'd like

17 to do that. You're probably not going to be able to

18 do that.

19 MR. WHEELER: Okay.

20 CHAIR STETKAR: The reason I wanted to

21 flip ahead is I didn't know if you had a slide on of

22 the ultimate heat sink, and you don't.

23 MR. WHEELER: I do not.

24 CHAIR STETKAR: So I'll bring it up under

25 the Essential Service Water System.

1 I asked it this morning, and if you're
2 going to address it later as pat of the plan, this
3 notion of why 30 hours for an ultimate heat sink and
4 36 hours for a cooling pond.
5 MR. WHEELER: You mean 30 days or --
6 CHAIR STETKAR: I'm sorry. Days -- days.
7 I can't read my own writing. Were you going to
8 address that later?
9 MR. WHEELER: Yes.
10 CHAIR STETKAR: Okay. Good. I'll wait
11 then and you can continue with your plan.
12 MR. WHEELER: Okay. Moving on to 9.2.2
13 Component Cooling. Of course, MHI previous described
14 the CCWS system. That design includes a 3100 gallon
15 surge tank between the CCWS trains. The CCWS train or
16 pumps take a section from that common surge tank, and
17 there's no safety-related make-up to that surge tank.
18 In addition, there is no automatic valves that
19 separate the trains out during an accident.
20 There are plant conditions in which bulk
21 CCWS pumps coming off the common surge tank may be
22 operated at the same time, unless for example during a
23 plant startup and cool down.
24 The CCWS system is considered a moderate-
25 energy system. A pipe break in the moderate-energy

1 system has potential to draw in the common CCWS surge
2 tank. Details of the postulated pipe break and the
3 common CCWS header has not been adequately addressed
4 by MHI, thus this is an open item.
5 We did receive the RAI response at the
6 beginning of this month. The staff is still looking at
7 the evaluation of that RAI response. It looks
8 favorable that we'll be able to close this item out.
9 A little bit of the details of the RAI
10 response is if the stress level for a safety-related
11 Class 3 component, if the stress levels are low enough
12 below a threshold, you don't need to postulate a pipe
13 leak. And that's still being reviewed by the staff.
14 CHAIR STETKAR: Okay. They're going to
15 take the approach that you don't have to postulate it?
16 MR. WHEELER: You don't have to postulate
17 it if the stretch levels are below a certain value.
18 CHAIR STETKAR: Well, that make sense,
19 but I'll have to see.
20 MR. WHEELER: Yes. Of course, that's
21 different than high energy line break.
22 CHAIR STETKAR: I'm sure. That's right.
23 MR. WHEELER: So that closes the 9.2.1
24 and 9.2.2 discussions. So what I'd like to do is kind
25 of get over some of the items from this morning. And

one of the items to the staff that I had heard was the DCD roughly versus this interim Rev. 4. What happened was the staff had asked MHI for an interim Rev. 4 to simplify the staff's the SER on the safety-related systems. And this kind of follows suits with what we did on EPR.

CHAIR STETKAR: Yes.

MR. WHEELER: For some of these four safety-related systems, the staff generated over 150 RAIs. So for the staff to go through and talk about 150 RAIs through the SER would be very confusing.

When I started off doing the EPR 9.2.2 review, the SER turned out to e 120 pages. And by going on this type of concept, being able to shrink that SER down to less than 20 pages. So that's a little explanation of why the interim Rev. was so important to the staff. It shortened our review and OGC's review and, obviously, your review.

MEMBER BLEY: Yes. I would say we appreciate it too, but there were some other design similar so that every time you'd raise a question, it had already been solved. So thank you.

MR. WHEELER: Yes. The other question that I picked up from this morning is related to this cross-typing of CCWS trains that these NOV 7 series

1 and 20 series valves. Originally I think in Rev. 2
2 that these valves got local signals to close and you'd
3 have separation A and Train B, C and C and D.
4 Because the concerns with the loss of
5 flow to the thermal barrier, this was MHI's design
6 approach to ensure flow to the thermal barrier, but it
7 causes other issues. And at the end, the train
8 separation.
9 So for this issue there is a COL
10 information item, 13.5.6. And there's operator action
11 that's required by the COL to address isolating the
12 trains within 24 hours. And in my SER there's a kind
13 of a discussion about where the 24 hour came from the
14 discussion was related to a SECY paper.
15 The other question that you had was --
16 CHAIR STETKAR: Can I stop you --
17 MR. WHEELER: Sure.
18 CHAIR STETKAR: -- because I want to
19 follow-up on that a little bit. First of all when I
20 asked the applicant this morning about the change to
21 the design, they essentially said "Well, it was
22 initiated because the Standard Review Plan says that
23 you shall not have any automatic isolation for the
24 CCWS flow to the reactor coolant pump thermal
25 barriers. Is that true? I mean is that explicit that

1 the--

2 MR. WHEELER: That is very clear in 9.2.2

3 SRP.

4 CHAIR STETKAR: Mm, okay. Even if I had

5 the smartest, best designed automatic isolation

6 signal, I have to rely on operator actions?

7 MR. WHEELER: The concern is, for

8 example, the APR design CCDS is nonsafety, so you

9 totally are relying on CCWS for seal coolant.

10 In this case CCDS and component cooling

11 are both safety-related, so they're complimenting each

12 other.

13 CHAIR STETKAR: So for a better design, I

14 still because of a regulatory Standard Review Plan but

15 the onus on the operators to save the day?

16 MR. HAMAMOTO: Hossein Hamzehee --

17 MR. WHEELER: I don't understand saving

18 the day for --

19 CHAIR STETKAR: You know, I'm going to

20 get to why they have to close these valves. I just

21 sort of am curious about why the NRC -- it's

22 interpreted that the NRC says certain functions shall

23 be performed by the operators even, you know

24 regardless of the design, regardless of how the

25 signals might be designed and automated; that this is

1 something that the operators, yet another thing that
2 we need to burden the operators with.
3 MR. HAMAMOTO: Let me just clarify this
4 to give you a detailed technical justification. Maybe
5 later on we can do that because within this SRP as
6 Larry said, but again this SRP also says this is the
7 guidance preference. However, the applicant can
8 propose other designs, but then they have to justify
9 why they believe it's better and safer. And then the
10 staff will review and either approve or disapprove.
11 CHAIR STETKAR: And I'm glad you put that
12 on the record. Thank you.
13 MR. WHEELER: The Rev. 2 design for this
14 system, had those valves gone closed and there was an
15 operator action within an hour to re-establish CCWS
16 flow to the thermal barriers, but that resulted in a
17 whole bunch of other questions about water hammer. So
18 this design was their fix for what the SRP says. Of
19 course the SRP is guidance.
20 CHAIR STETKAR: Right. I thought about
21 the Rev. 3 design and there was some fairly clever
22 things that they put in the Rev. 3 design for
23 isolating those lines. I didn't think much about
24 water hammer.
25 MR. WHEELER: Yes.

1 CHAIR STETKAR: And a bit of my concern
2 is that people get focused on specific issues. It's
3 like the reverse flow through the drain line; that you
4 try to make things perfect for one issue and, perhaps,
5 not so good for more likely things.
6 MR. WHEELER: Okay.
7 CHAIR STETKAR: So protection against
8 water hammer is certainly something that we need to
9 think about. Burden on operators in also something
10 that we need to think about. And I recognize that
11 there was a need for --
12 MR. WHEELER Okay.
13 CHAIR STETKAR: -- the operators to
14 restore cooling, you know if it was isolated
15 automatically. So there may not be a design that
16 completely removes the operators, you know the perfect
17 design, if you will. But I'm trying to understand
18 this notion of on the one hand the applicant perhaps
19 taking an expedient approach because it's consistent
20 with the SRP --
21 MR. WHEELER: Yes.
22 CHAIR STETKAR: -- for a particular issue
23 that may be focused on water hammer, and yet
24 introducing perhaps some additional burden on the
25 operators which may not necessarily be in the best

1 interest of overall, you know plant response.

2 But at least you've answered the first

3 part of my question about the SRP. So I understand

4 that a little bit better.

5 Now, I read the story, I didn't read the

6 SECY papers; I didn't have enough time. But explain to

7 me what the magic 24 hours is.

8 Now the current design says that they

9 need to manually close those isolation or cross-tie

10 valves, whatever you want to call them, the 7 and the

11 20 valves. In the DCD it's left nebulous under

12 accident conditions. You know, basically determined by

13 the operators.

14 MR. WHEELER: Right.

15 CHAIR STETKAR: In the SER there is this

16 notion of they have to be closed within 24 hours based

17 on a SECY paper.

18 MR. WHEELER: Right.

19 CHAIR STETKAR: What's the basis for that

20 24 hours?

21 MR. WHEELER: That was the proposal from

22 MHI to use the 24 hour and use up. The SECY paper and

23 the staff looked at that as being reasonable. The

24 separation that I see, I only see two conditions in

25 which we're really going to need to define the

1 separation.

2 And the first one is when you have

3 maintenance. If you have a Train A that's out and you

4 want to keep B running, you obviously would isolate

5 the A and the B side.

6 Two is if you have an accident signal and

7 one pump is running and the other one's in standby,

8 and the second pump actually comes on during the

9 safety injection signals, and now you got two pumps

10 running. And then, for example, A or B trips. So now

11 you have one pump trying to supply the B loads, the

12 common header loads and then it's also trying to

13 support flow to the alpha ECCS loads.

14 And we asked MHI to evaluate whether

15 there would be a degraded condition for the heat load

16 and the pump's flow. And they came back and said that

17 there was adequate margin in the heat exchanger,

18 that's a plate-type heat exchanger. They had about a

19 20 percent margin in the heat exchanger. And that

20 there was adequate flow in the pump; and I think it's

21 somewhere in the five to seven percent range.

22 So right off the bat they said even if

23 this scenario happened which both pumps were running

24 and then one trips, you're supplying flow to the

25 opposite header, do we have margin?

1 CHAIR STETKAR: Well --

2 MR. WHEELER: So then we looked at that

3 and said "Well, okay. That's good that we have this

4 margin, but let's put some type of time table of when

5 it'll be a good idea to actually make that separation

6 to get away from using that margin in --"

7 CHAIR STETKAR: Before we talk about the

8 good idea and the time, I want to make sure that I

9 understand the design and what you said earlier. And

10 let me say it back so that I can actually see if I

11 understand it.

12 Are you saying that they've done an

13 analysis that shows if I have one pump running, let's

14 call it the A pump --

15 MR. WHEELER: Yes. Right.

16 CHAIR STETKAR: -- supply flow now in

17 parallel to all of the Train A loads --

18 MR. WHEELER: Right.

19 CHAIR STETKAR: -- all of the Train B

20 loads.

21 MR. WHEELER: Right. Yes.

22 CHAIR STETKAR: -- now safety loads and

23 the common header, the A1 common header --

24 MR. WHEELER: Yes.

25 CHAIR STETKAR: -- with the A2 common

1 header isolated --

2 MR. WHEELER: Right.

3 CHAIR STETKAR: -- that I'm okay?

4 MR. WHEELER: You're okay. That's in the

5 SER.

6 CHAIR STETKAR: Fine. I thought I

7 understand that, but good.

8 MR. WHEELER: Yes. But keep in mind the

9 biggest flow on the opposite header would be to the

10 RHR heater exchanger.

11 CHAIR STETKAR: Yes.

12 MR. WHEELER: And that valve hasn't

13 opened.

14 CHAIR STETKAR: I'm sorry, it has if I've

15 had a LOCA, hasn't it?

16 MR. WHEELER: But that system is just

17 isolated.

18 CHAIR STETKAR: It has?

19 MR. WHEELER: Let me backup. I'm trying

20 to remember in the RAI response, MHI took credit for

21 that valve not being opened.

22 CHAIR STETKAR: Ah, well that's special.

23 MR. WHEELER: And maybe they looked at it

24 at a range of failures that maybe is not complete.

25 CHAIR STETKAR: I mean, that's right. In

1 the initial scenario -- what got me thinking, and the
2 reason I wanted to say it back is your scenario said
3 well suppose I have a condition where both pumps come
4 on--
5 MR. WHEELER: Yes.
6 CHAIR STETKAR: You know A and B on, and
7 let's call that call that a LOCA.
8 MR. WHEELER: Okay.
9 CHAIR STETKAR: Or a steam line break, or
10 you know some ECCS actuation thing. Let's call it a
11 LOCA where you actually need heat removal. And then
12 pump B trips.
13 MR. WHEELER: Right.
14 CHAIR STETKAR: You know, well the outlet
15 -- I haven't looked at all of the logic diagrams and
16 things. Will the outlet valve from the Train B heat
17 exchanger then go closed or will it stay open? You
18 know, can you get into a configuration where have an
19 ECCS actuation signal --
20 MR. WHEELER: Yes.
21 CHAIR STETKAR: -- such that Pump A,
22 let's call it, are supplying flow to all three of
23 those lines --
24 MR. WHEELER: Right.
25 CHAIR STETKAR: -- you know with heat

1 being removed from both the A and B heat exchangers --
2 MR. WHEELER: Yes.
3 CHAIR STETKAR: -- or not only, you know
4 just the component cooling, from all of the Train A
5 and B ECCS loads, the pump coolers and all of that
6 other stuff out there.
7 MR. WHEELER: Right. I think there's
8 check valves that are going to prevent flow from the B
9 side to go back through the alpha heat exchanger, so
10 you're not going to get flow to that heat exchanger.
11 Was that your question?
12 CHAIR STETKAR: No. If I just take a
13 single pump --
14 MR. WHEELER: Yes.
15 CHAIR STETKAR: -- and connect it to --
16 MR. WHEELER: Yes, I got the flow diagram
17 right in front of me.
18 CHAIR STETKAR: Yes. Okay. Well, let me
19 find my flow diagram so that I can -- I've lost it.
20 Can I come to an alignment if I'm looking
21 at Sheet 1 where the A component cooling water pump is
22 supplying flow through the A -- what's called on the
23 drawing the A supplied header --
24 MR. WHEELER: Yes.
25 CHAIR STETKAR: -- the A1 supply header -

1 -

2 MR. WHEELER: Yes.

3 CHAIR STETKAR: -- and the B supply

4 header--

5 MR. WHEELER: Yes.

6 CHAIR STETKAR: -- where the heat loads

7 on the A supply header and the B supply header are all

8 running? In other words, the pumps that are cooled,

9 the chillers that are cooled and the -- I'm sorry, not

10 the chillers because this is CCWS. And the heat

11 exchanger, you know like the RHR heat exchangers.

12 Because all of those kind of come back together into

13 the common return header at the -- you know, we're not

14 going to worry about reverse flow in LOOPs.

15 MR. WHEELER: Yes.

16 CHAIR STETKAR: I'm assuming there are

17 check valves out there anyway someplace, but that you

18 now have one pump's worth of flow going through the

19 three parallel sets of heat loads.

20 MR. WHEELER: Yes.

21 CHAIR STETKAR: And is that the analysis

22 that they did?

23 MR. WHEELER: We'd have to go back and

24 look at the RAI response. But I'm fairly certain that

25 that's is correct.

1 CHAIR STETKAR: Okay. If that is, then
2 that's a big confidence builder because if indeed the
3 system doesn't get into trouble in terms of
4 temperatures or, you know flow characteristics of the
5 pump, or anything under those conditions, then it's
6 not clear to me that the operators ever have to close
7 the cross-tie valves. If indeed the RAI response
8 doesn't address those conditions, if they made some
9 assumptions about flow through the -- you know Train B
10 let's call it in this case being isolated, and you
11 know and particularly through the RHR heat exchanger
12 because that will be the largest load, then that
13 determines conditions under which perhaps the
14 operators may need to close those cross-tie valves if
15 that becomes unacceptable. And that might be less than
16 24 hours. But I don't know what the unacceptable
17 conditions would become.
18 MR. WHEELER: Yes. I thought I did a
19 fairly good job in the SER explaining the margins that
20 were available during this scenario which one pump had
21 tripped off and the other pump was supplying all the
22 loads. And I'm trying to find that in the SER right
23 now.
24 CHAIR STETKAR: Yes. And I did read the
25 SER. I tried to understand it. And it wasn't, I

1 guess--

2 MR. WHEELER: There's 1.32 E to the sixth

3 BTU per hour added load to the heat exchanger during

4 this duration in which one pump had tripped off and

5 the other pump was supplying all the loads. And

6 that's pretty insignificant against the heat

7 exchangers that are designed for 190 E to the sixth.

8 CHAIR STETKAR: With that sort of flow

9 rate, though, on the CCW side -- okay.

10 Well maybe -- we're going to get back

11 together again tomorrow. Maybe you can --

12 MR. WHEELER: Okay. Yes.

13 CHAIR STETKAR: -- point me to the

14 places. It may be there and I'm not -- you know, I'm

15 being dense. I've been dense in the past. Ad it will

16 continue in the future.

17 MR. WHEELER: Well, I'll go back over the

18 RAI response.

19 CHAIR STETKAR: Now, Larry, the 24 hours

20 from what you were saying earlier, is that -- I think

21 you characterized it as something like well it would

22 be a good idea at some time to separate these things.

23 MR. WHEELER: Yes.

24 CHAIR STETKAR: Is that basically what

25 that SECY paper says? I mean, what's the basis for

1 that 24 hours? If indeed this configuration gives you
2 stable heat removal with no challenge to either heat
3 removal or equipment survivability, why would the
4 operators need to close those valves at all?
5 MR. WHEELER: In the SER we talked about
6 the SECY-77-439 and it references this as that 24
7 hours or greater for long term cooling. So I can go
8 back and then for tomorrow's discussion --
9 CHAIR STETKAR: Because I didn't go back-
10 -
11 MR. WHEELER: -- we can pull that
12 document together and --
13 CHAIR STETKAR: Unfortunately, I didn't
14 have time to go back and look that up. And I'm
15 curious about it because it says SECY-77, which is a
16 while ago.
17 Thanks. I'd appreciate it.
18 MR. WHEELER: Okay. I can do that.
19 The other question we had for these was
20 30 days versus 36 days --
21 CHAIR STETKAR: Yes.
22 MR. WHEELER: -- and the ultimate heat
23 sink. And in the DCD it is not very clear what it
24 means, but 30 days supply versus 36 day supply. And
25 in the Reg. Guide, I believe, it essentially is

1 talking about the analysis for meteorological
2 conditions for 36 days for a cooling ponds. And that's
3 because it takes if you're using cooling pond, an
4 additional five days for that heat load to actually
5 get to the cooling pond to its maximum temperature.
6 So that's a difference between doing a meteorological
7 review for 30 days versus the 36 days. And that's why
8 I said the DCD is kind of unclear for the 36 day heat
9 pump.
10 CHAIR STETKAR: Well, yes. And for
11 example--
12 MR. WHEELER: And it says you have a 30
13 days supply.
14 CHAIR STETKAR: Right. And I understand
15 the 30 days. That's --
16 MR. WHEELER: And then it starts talking
17 about doing an analysis of 36 days meteorological data
18 for the cooling pond design.
19 I'll this with you.
20 CHAIR STETKAR: What's the date on the
21 Reg. Guide?
22 MR. WHEELER: '76.
23 CHAIR STETKAR: Yes. The only reason it
24 honestly doesn't effect the subject of this meeting --
25 MR. WHEELER: Of the DCD, right.

1 CHAIR STETKAR: -- it doesn't effect the
2 DCD at all. I'm just curious about the fact that if
3 I'm now in the COL world, given these words in the
4 DCD--
5 MR. WHEELER: Yes.
6 CHAIR STETKAR: -- given the words in the
7 SER for the DCD --
8 MR. WHEELER: Yes.
9 CHAIR STETKAR: -- if I want to use a
10 mechanical draft, cooling towers with things that look
11 like large swimming pools --
12 MR. WHEELER: Yes.
13 CHAIR STETKAR: -- and call that my
14 ultimate heat sink, I need to have 30 days worth of
15 water in there accounting for what meteorological
16 conditions.
17 If I instead want to dig a big hole out
18 there in the south 40 and line it with some really
19 good clay --
20 MR. WHEELER: Yes.
21 CHAIR STETKAR: -- and fill it full of
22 water and have pumps take suction from it and allow
23 for just normal evaporative cooling --
24 MR. WHEELER: Yes.
25 CHAIR STETKAR: -- the implications are I

1 need to account for 36th days worth of inventory.
2 MR. WHEELER: Right.
3 CHAIR STETKAR: Even though I might call
4 that other thing out there my ultimate heat sink.
5 MR. WHEELER: That's right.
6 CHAIR STETKAR: but I might call the
7 Mississippi River my ultimate heat sink. So --
8 MR. WHEELER: For example, the EPR only
9 has 72 hours of ultimate heat sink on site.
10 CHAIR STETKAR: Yes.
11 MR. WHEELER: They have safety-related
12 pumps that bring in water from the Chesapeake Bay. So
13 that's their approach to Reg. Guide 1.27. So --
14 CHAIR STETKAR: Calvert Cliffs' version
15 of the EPR, not the EPR?
16 MR. WHEELER: That's right.
17 CHAIR STETKAR: But if I wanted to dig a
18 pond, I'll call the site South Texas for example --
19 MR. WHEELER: Yes.
20 CHAIR STETKAR: -- where they built dug a
21 big pond, that pond would need to supply 36 days worth
22 of water according to that Reg. Guide?
23 MR. WHEELER: No. It says you need to do
24 an analysis for 36 days of meteorological.
25 CHAIR STETKAR: Okay. Okay. Okay.

1 That's a Reg. Guide, now I know you said
2 you'd leave it with me, but --
3 MR. WHEELER: 1.27.
4 CHAIR STETKAR: 1.27.
5 MR. WHEELER: Yes. And it's going through
6 revision right now.
7 CHAIR STETKAR: That number sounds
8 familiar.
9 You remember everything, Bill. Have we
10 seen that?
11 MEMBER SHACK: 1.27, no.
12 CHAIR STETKAR: Okay.
13 MEMBER SHACK: That's a number that would
14 stick in your head. I mean that's getting back there.
15 CHAIR STETKAR: Okay. All right. There
16 is some explanation. And you said it is being revised
17 now?
18 MR. WHEELER: Yes, it is.
19 CHAIR STETKAR: Okay.
20 MR. WHEELER: I'm not quite sure what
21 we're doing with the 36 day thing, but now we'll have
22 to look at in detail.
23 CHAIR STETKAR: Apparently, a timely
24 question.
25 Component Cooling Water, since the slide

1 is still up there, the SER discusses gas accumulation
2 in the component cooling water system. And it seems
3 to focus primarily on the surge tank. There's a
4 discussion about the fact that there's a nitrogen
5 cover gas on it, but because the piping arrangement,
6 the elevation and things like that, that it's unlikely
7 that that nitrogen would become entrained and cause
8 any gas accumulation in the system.
9 Did you look at other possible ways that
10 gas, not nitrogen, air could become entrained in the
11 system in local high spots in the systems? For
12 example, after maintenance if high points in the
13 system were not vented. In other words, did you go
14 through the system to assure yourself that it contains
15 high point vents in local places where you might have
16 essentially LOOPs created where you could accumulate
17 gas? Not necessarily from nitrogen, but in leakage --
18 MR. WHEELER: Yes.
19 CHAIR STETKAR: -- maintenance, you know
20 things like that?
21 MR. WHEELER: That wasn't the extent of
22 my review. That would apply to any system across the
23 board that if you don't have high point vents, then
24 you can't hydrostatically test the system adequately.
25 So you really can't meet ASME code. So kind of goes

1 without saying that you're going to have to have high
2 point vents in any ASME section 3 piping system.
3 CHAIR STETKAR: The only reason I raised
4 it is I did see words like "high point vents" in other
5 systems. I didn't see it in this.
6 MR. WHEELER: Yes. I kind of think it
7 goes without saying that the systems have to have high
8 point vents in their pockets.
9 One of the other comments you made was
10 about a half hour ago about the spent fuel pool loss
11 of cooling and the temperature alarms. And I think it
12 kind of goes without saying that the COL is going to
13 develop alarm responses for all those alarms that are
14 going to deal with details, actions to the control
15 room operators know what to do. So in the case of a
16 high temperature alarm on the spent fuel pool, he's
17 going to hit the alarm, he's going to get out the
18 instruction and it's going to say, you know, verify
19 pumps are running. If not, start a pump. I think that
20 kind of goes without saying that the COLs have to
21 develop alarm instructions for any alarm that comes
22 into the control room
23 MEMBER BLEY: Could you clarify something
24 for me?
25 MR. WHEELER: Yes.

1 MEMBER BLEY: At what point in time will
2 the new orders that were issued as a result of
3 Fukushima apply to these new plants?
4 MR. WHEELER: Well, I --
5 MS. McKENNA: This is Eileen McKenna.
6 We are still evaluating how we're going
7 to apply the positions taken for Fukushima to new
8 reactors. We think in general we have time to try to
9 deal with these in a measured way an we are
10 considering whether we ask questions. And we -- get
11 new licenses get issued, have orders. But we're
12 obviously in a position to have discussions.
13 MEMBER BLEY: I'm sure you are.
14 MS. McKENNA: We're not prepared today to
15 say how we're going to approach it for this particular
16 applicant.
17 MEMBER BLEY: Okay. So we don't know yet
18 whether it will be before duel load or --
19 MS. McKENNA: Well, certainly I think
20 before that. I think the question is at what point in
21 the licensing process will these things be --
22 MEMBER BLEY: Yes, but there's a number
23 of them that already have their --
24 MS. McKENNA: Yes. And in the case of
25 Vogtle, I think the plan was to send -- and I think

1 also a 50.54(f) letter on certain position. And we're
2 also considering for all the other applicants --
3 MEMBER BLEY: Okay. So that might be
4 before the COL?
5 MS. McKENNA: It could well be, yes.
6 MEMBER BLEY: Okay.
7 MR. WHEELER: So do you have any other
8 questions?
9 CHAIR STETKAR: Let me just check my
10 notes here. No.
11 MR. KALLAN: Okay. Thank you, Larry.
12 I turn it over to Angelo Stubbs.
13 MR. STUBBS: Okay. Good afternoon.
14 My name is Angelo Stubbs. I'm with the
15 Balance of Plant Branch and I performed the review for
16 FSAR Section 9.2.6 Condensate Storage Facilities.
17 I guess this morning the Applicant gave
18 you a quick overview of that system. They also had a
19 slide in there about the open item, but they didn't
20 present it, unfortunately. But just some of the
21 features. "Key," may not be really the word, but some
22 of the ones that I wanted to bring up for saying this
23 is as they told you this morning, the Condensate
24 Storage Facility has three systems. It has a big bin
25 water system, the condensate storage and transfer

1 system and the primary makeup water system.

2 It basically supplies and receives

3 condensate from the -- to and from the condensate

4 hotwell as required. The system is a nonsafety-

5 related system and has no safety-related functions.

6 And a lot of the Condensate Storage systems, the

7 condensate storage tank is used as a primary water

8 source for aux feedwater and emergency feedwater. But

9 for this design there is dedicated emergency feedwater

10 pits that contains, I think, it's combined of 400,000

11 gallons of water that's used to support the operation

12 of the emergency feedwater system. And also that

13 supports the Station Blackout, which is the other

14 thing that we looked at the condensate storage tank

15 for.

16 According to the table they have in

17 Chapter 9, the tank is about 750,000 gallons. It's a

18 non-seismic tank. It has a dyke which they say it can

19 contain the whole contents of the tank, but the dyke

20 is a nonseismic dyke, so that -- and they say that's

21 used to mitigate the environmental effects of system

22 leakage or storage tank failure.

23 For our evaluation, I evaluate this as

24 our SRP 9.2.6, and this is for general condensate

25 storage facilities. And in some cases they have

1 safety-related functions and some cases there's
2 condensate storage facilities with no safety-related
3 functions.
4 In the application in Chapter 1 Table
5 1.9.2 they indicated that the SRP 9.2.6 is not
6 applicable for this plant, which is different for me
7 because all the licensing plants I've seen and all the
8 new reactors I've seen to some extent you use 9.2.6
9 and there is some GDCs that apply, and often they'll
10 point out what doesn't apply and then just how to meet
11 what does apply.
12 While we're reviewing this the heat
13 transfer functions were not required, the GDC 44, 45,
14 46 is a plant that is a one-unit plant. So the GDC
15 doesn't apply. But based on our review, I felt that
16 GDC 2 and GDC 60 applied, also they needed to meet the
17 requirement of the 10 CFR 20.1406.
18 So, after looking at what was presented
19 in their design, those were the things that I felt
20 needed to be meant.
21 In a slide I just took something out of
22 the SRP, it doesn't show everything, but one of the
23 things it indicates in the SRP is that outside designs
24 should be compliant with GDC 60 and Reg. Guide 1.143.
25 So their denial that GDC 60 applies, that was to point

1 that out.

2 And also, in that same one it says that

3 for nonsafety-related storage facilities there's a

4 need for a seismic category 1 dyke or retention basin

5 review. So I reviewed that.

6 The GDC 2 comes in, and in this case if

7 there was an earthquake, you wouldn't be able to take

8 credit for the tank not filling or the dyke containing

9 the contents of the tank.

10 So we issued an RAI, and this is what the

11 open item is, and we request that they provide

12 justification for use of a nonseismic dyke in

13 conjunction with the nonseismic tank. And we asked

14 them how they would comply with GDC 2 and 60 if you

15 had such a failure and what would happen with the

16 resulting flooding that could occur if you had a

17 seismic event that resulted in that failure.

18 MEMBER BLEY: And have they responded to

19 that yet?

20 MR. STUBBS: They did respond to it. And

21 their initial response to it in an RAI letter that

22 they gave us on December 15th, 2011. And in that

23 response they basically came to the conclusion that

24 GDC 2 and GDC 60 were not applicable.

25 But what they said was "The condensate

1 storage tank is classified as nonsafety-related as the
2 system does not perform any safety-related function.
3 Hence, GDC 2 is not applicable. The CST, its dyke and
4 pump house are strategically located away from the
5 other structures, systems and components, particularly
6 the safety-related SSCs, the flat site grading and the
7 nuclear island area, and the yard drainage from the
8 area minimizes any adverse impacts of any safety-
9 related SSCs due to the failure of the tank and/or the
10 dyke. Hence the CST and the CST dykes are designed as
11 nonseismic."
12 So they credited that it was out in the
13 yard away from other safety-related SSCs, and they
14 talked about the site drainage. And in their slides
15 this morning they have other things about entrance is
16 being located one foot above, but -- and greater slope
17 and drainage. And they have a conclusion that
18 therefore the failure of the tank and dyke does not
19 impact safety-related SSCs.
20 So, we did talk to them and try to
21 explain what our concerns was. And I think they're
22 going to be providing us a revised or a supplement to
23 that RAI response. But at that time they still -- they
24 seemed to be willing to address GDC 60, but they still
25 was taking the stance that the way they read GDC 2 it

1 doesn't apply. But I think they recognize the fact
2 that the flooding issue needs to be addressed.
3 I looked at the site arrangement, and the
4 reason I was focusing on the condensate storage tank
5 is it seems to be located over in the yard just
6 outside of the turbine building, not too far from the
7 turbine building. And also in their response they
8 talk about slope and drainage systems should be
9 provided as site-specific plant design.
10 One of the things is this doesn't seem --
11 this feels like they're making conclusions there, but
12 it seems like this is a site-specific issue. Well, a
13 COL would need to be -- there would need to be a COL
14 item.
15 MEMBER BLEY: And this is ground water.
16 I mean --
17 CHAIR STETKAR: Well, and if it is
18 though, if I'm the COL, I think I'd need to know that
19 I need to consider this. Right? So at a minimum,
20 there would to be an explicit COL information item
21 that, you know MR. STUBBS: I think that
22 there needs to be a COL --
23 CHAIR STETKAR: I mean, that's -- I mean
24 we don't do that kind of thing.
25 MR. STUBBS: No, you know that's

1 something that I think needs to be done.

2 But looking at the plan, though, and

3 looking at it the concern I had was with the power

4 source building and the power source volts, both. And

5 when I looked at the two COLs, one looked like

6 everything looked okay and everything drained away.

7 The other looked like it sort of drained back, it

8 drains downhill which would pass by those building.

9 And so it seems like that the statement seems fine,

10 but it just has to be verified. If it's not verified,

11 there needs to be a flooding evaluation that we can

12 look at and that we can confirm the conclusion that's

13 being drawn. And so far I've asked about that, I

14 haven't seen that, and I have seen the COL item. So

15 we still have work to do on that and it's one of those

16 things that it's just like the turbine building when

17 you have a break in the circ water line, there's a lot

18 of water there. And in the case for one of the COLs

19 where there's a dual site, you basically have two of

20 these things side-by-side. SO you really have lots of

21 water.

22 But when I look at what they have here,

23 there's some recognition that there's a problem that

24 has to be addressed, but to this point I don't see

25 that it's fully addressed because the site grading is

1 something is something that's going to be different
2 from plant-to-plant. I think the COL has to be
3 involved. Because either that or, you know they set up
4 where they can't do it, then they're going to have to
5 make a decision on their design whether to depart and
6 make a dyke or something seismic. But that's the open
7 issue. It was something that I, you know when I first
8 read through it it looked okay, but then as I -- you
9 know, as I went back to the site plan and started
10 looking at thing, it seemed like we may have a problem
11 there.
12 The other tanks, the demin storage tank
13 was located sufficiently away in the general plan.
14 CHAIR STETKAR: That's what I was going
15 to ask. You know, we're just about to muddy the
16 waters, if you will, and ask about the demin storage
17 tank because I meant to ask MHI this morning there's
18 no mention of a dyke around that tank.
19 MR. STUBBS: No, I think --
20 CHAIR STETKAR: And it's equally
21 nonseismic. It's 500,000 gallons --
22 MR. STUBBS: Right.
23 CHAIR STETKAR: -- instead of 750,000
24 gallons.
25 MR. STUBBS: Right.

1 CHAIR STETKAR: But it's still a
2 considerable amount of water.
3 MR. STUBBS: It is. It is. And when I
4 looked at the general layout, from what I looked at
5 the location of it, it looked like it was a little bit
6 down from the --
7 CHAIR STETKAR: With things like the
8 locations of tanks, is that an R-COLs? I mean, could
9 the R-COLA decide that they want to move it up there
10 in the corner someplace --
11 MR. STUBBS: Well, here's the thing --
12 CHAIR STETKAR: -- if they'd like to do
13 that?
14 MR. STUBBS: The other thing with both is
15 tanks as part if the flood analysis of 3.4.1.2, the
16 external outdoor tanks and piping should be evaluated.
17 And they do talk about in 3.4.1 -- in 3.4.1.2 I think
18 they actually put an example and they have the primary
19 makeup storage tank, refueling water storage tank,
20 demin water storage tanks,fire water storage tank --
21 they don't mention the condensate water tank at all,
22 but they do talk about it as part of the flooding
23 analysis and the flood evaluation they should be
24 addressed. So, that's why I didn't bring it up there.
25 And maybe the condensate storage tank

1 should also be addressed as part of it also.

2 CHAIR STETKAR: But recognize that if we

3 get the right kind of seismic event we're talking

4 about not only the 750,000 gallons in the condensate--

5 MR. STUBBS: In the -- right.

6 MR. STUBBS: We're talking about the

7 condensate storage tank and the demin storage tank.

8 MR. STUBBS: Right.

9 CHAIR STETKAR: Both of them, because

10 they're equally nonseismic.

11 MR. STUBBS: Right.

12 CHAIR STETKAR: We're talking about the

13 primary water makeup tanks --

14 MR. STUBBS: Right.

15 CHAIR STETKAR: -- which are in a

16 building, but I don't know -- what, that is another

17 280,000 gallons of water.

18 MR. STUBBS: Yes. They're over by the

19 refueling water storage tank at the end of the

20 auxiliary building. So these in terms of location,

21 they're sort of at the opposite ends of the plant --

22 the makeup water and the refueling water storage tank.

23 But you're right: If you have nonseismic

24 tanks, all of them would be assumed to have failed.

25 CHAIR STETKAR: I mean, you know they're

1 not necessarily exactly equal, but --

2 MR. STUBBS: Right, right. But that

3 would also be part of -- you know in the flooding

4 analysis you would be looking at the failure on your

5 nonseismic tanks and looking --

6 CHAIR STETKAR: Do they do that with all

7 of them or do they do one-by-one and say "Okay, this

8 one's got two gallons in it so that's not a problem,

9 this one has eight gallons in it and that one's not a

10 problem?

11 MR. STUBBS: Well, obviously the

12 inventory isn't large enough, they probably don't look

13 at it. But thinks that have large inventories, they

14 should look at. And that's still part of our flood

15 evaluation that we're trying to get to the point we've

16 requested to have the calculations available for it to

17 do a audit of. But whatever they can't do as part of

18 the standard design, they need to make sure that the

19 COL do. And because these locations may vary based on

20 COL it seems like that may be something that the COL

21 will end doing. It would be, you know put into as a

22 bigger COL item in Chapter 3 to either verify that the

23 slopping takes it away or do an analysis to show that

24 the flooding don't affect safety-related SSCs or

25 buildings.

1 CHAIR STETKAR: Okay.

2 MR. STUBBS: And that's really all I had.

3 If you have questions, I'll be glad to answer them.

4 CHAIR STETKAR: I don't. Anyone else?

5 MR. KALLAN: Thank you, Angelo.

6 I guess I'll turn it over to David Nold.

7 CHAIR STETKAR: I'm sorry, Angelo. Does

8 the demin tank had a dyke around, do you know?

9 MR. STUBBS: The only thing, in their DCD

10 they're saying their dykes are at a primary water

11 storage tank --

12 CHAIR STETKAR: I read that, yes. Let me

13 ask MHI just to --

14 MR. STUBBS: There was no mention of a

15 dyke around the demin.

16 CHAIR STETKAR: Can someone from MHI

17 clarify? Is there a dyke -- I don't care of it's

18 seismic or nonseismic. I'm just trying to find out at

19 the moment whether there's a dyke around the

20 demineralized water storage tank.

21 MR. MASASHI: I am Masashi Ito, MNES.

22 The primary makeup of the tank.

23 CHAIR STETKAR: Demineralized water tank.

24 I know there's a DWST.

25 MR. MASASHI: Excuse me.

1 CHAIR STETKAR: If you don't have it,
2 we're coming back tomorrow morning. If you don't have
3 a quick answer, you know it's something we can find
4 out tomorrow. Let's leave it at that. The staff
5 doesn't have too much left, but I want to make sure
6 that if we do have questions, we do need to finish by
7 about 5:00. So we'll just leave it on the to do list
8 for tomorrow morning.
9 MR. KALLAN: Okay. I'll turn it over to
10 Dick.
11 MR. NOLD: Good afternoon. My name is
12 David Nolan. I'm with the Containment and Ventilation
13 Branch.
14 When the SER is submitted --
15 CHAIR STETKAR: I'm sorry, Dave.
16 MR. NOLD: Yes, sir.
17 CHAIR STETKAR: I'm trying to keep ahead.
18 You guys are not talking about all of the stuff --
19 MR. NOLD: Right.
20 CHAIR STETKAR: -- in this chapter. And
21 there was one issue that kind of bothers me, and it's
22 on the essential chilled water system. So I don't
23 know who the appropriate person to drive into this is,
24 but --
25 MR. KALLAN: Yes. We have him --

1 CHAIR STETKAR: Ah. Hopefully, at least
2 I can frame the question a little --
3 MR. KALLAN: -- for you.
4 CHAIR STETKAR: -- bit better on this one
5 than I did earlier.
6 In the SER in Section 9.2.7.4.2, which is
7 the tech specs regarding the chilled water system,
8 there's the following statement: The US-APWR does not
9 include any technical specifications for the ECWS or
10 the non-ECWS. This is consistent with SRP Section 15
11 NUREG-1431 Standard Technical Specification for
12 Westinghouse Plants and is acceptable to the staff."
13 I'm really curious why you don't need
14 technical specifications for the essentially chilled
15 water system, which is a safety-related system that
16 supplies support to maintain acceptable environmental
17 conditions for the operation of safety-related
18 mechanical, electrical, instrumentation control and
19 Main Control Room habitability systems, and the US-
20 APWR technical specifications bases in Section B.3.7.8
21 for the essential service water system and B.3.7.9 for
22 the ultimate heat sink specifically note that ESWS
23 needs to supply cooling to the ECWS chillers. So, if I
24 need supply cooling to the ECWR chillers, and that's
25 in the tech specs and ECWS provides cooling to safety-

1 related systems that are in the tech specs, I really
2 don't understand why ECWS isn't in the tech specs
3 simply because somebody who had never looked at at
4 chilled water system wrote generic tech specs for a
5 Westinghouse plant. So if you could explain to me why
6 that's acceptable to the NRC staff, I'd be really
7 interested in that explanation?
8 MR. CURRAN: What you read right there is
9 from the SER?
10 CHAIR STETKAR: What I read from the SER
11 is the quote "That the US-APWR does not include any
12 tech specs for the ECWS or non-ECWS. This is
13 consistent with SRP Section 16, NUREG-1431, Standard
14 Technical Specifications for Westinghouse plants is
15 acceptable to the staff." That's a direct quote from
16 the SER.
17 MR. CURRAN: I don't --
18 CHAIR STETKAR: And no further
19 justification.
20 MR. CURRAN: I don't have a good answer
21 for you right now.
22 CHAIR STETKAR: Okay. I'd suggest you go
23 back and look at that and think about it, because --
24 MR. CURRAN: That's in a different
25 branch, and I will get back to you on that.

1 CHAIR STETKAR: Okay. Okay. I don't
2 normally read those tech specs' actions, but I was
3 skimming through it and wait a minute, no tech specs.
4 And, indeed, there are no tech specs because I went to
5 Chapter 16 and there aren't any tech specs. But if you
6 do a word search on "chilled," you'll find out indeed
7 there's a requirement -- you know, the tech spec bases
8 for ESWS, surface water. Note that one of its
9 functions is to cool those chillers.
10 Check with the tech spec folks, please.
11 MR. CURRAN: Okay.
12 CHAIR STETKAR: And now we can talk about
13 Main Control Room spec.
14 MR. NOLD: Good afternoon. My name is
15 david Nold, I'm from the Containment and Ventilation
16 Branch.
17 When the SER was compiled last Fall, it
18 was submitted with 13 open items. And probably most of
19 the 20 listed, I have 13. Since last Fall the good
20 news is that seven of those have either been moved to
21 confirmatory items or closed. So we're down to the
22 significant six, I guess is the best way to put it.
23 We're going to talk about three of those
24 open items in two slides today. And let me start from
25 there.

1 The staff's concern is captured in this
2 slide as the ability of the US-APWR plant to maintain
3 design temperatures within areas housing safety-
4 related systems and components following the onset of
5 Station Blackout. The staff seeks assurance that an
6 alternate AC power source will be available within 60
7 minutes from the onset of Station Blackout.
8 This slide actually represents two open
9 items or RAIs against DCD sections 9.4.1 and 9.4.5.
10 Section 9.4.1 pertains to the Main
11 Control Room HVAC system which maintains design
12 temperature limits within the Main Control Room
13 envelop.
14 Section 9.4.5 pertains to subsystems of
15 the engineered safety feature of ventilation system,
16 maintains design temperature limits within areas
17 housing safety-related equipment in the reactor
18 building and the power source building.
19 The governing regulations are 10 CFR
20 50.63 Loss of All Alternating Power which reads in
21 part: "The alternating AC power sources as defined by
22 50.2 will constitute acceptable capability to
23 withstand Station Blackout provided in analysis
24 performed which demonstrates that the plant has this
25 capability from the onset of Station Blackout until

1 the alternate Ac sources and required shutdown
2 equipment are started and lined up to operate."
3 GDC 4 reads, in part, "Structures and
4 systems more important to safety shall be designed to
5 accommodate the effects of and to be compatible with
6 the environmental conditions associated with the
7 normal operation, maintenance, testing, including loss
8 of cooling accidents."
9 Then we roll up into regulation.
10 Essentially Reg. Guide 1.155 Station Blackout, by
11 arriving in that Section C.3.3.5 provides specific
12 guidance with respect to alternate AC power sources.
13 Criteria 3 of Reg. Guide 1.155 "The time required for
14 making this equipment available shall not be more than
15 one hour as demonstrated by tests."
16 Criteria 5 reads: "The alternating AC
17 power system which should be inspected, maintained and
18 tested periodically to demonstrate operability and
19 reliability. The reliability alternate AC power system
20 should be or exceed 95 percent as determined in
21 accordance with NSAC 108 or equivalent methodology."
22 Currently the DCD Chapter 14 test
23 entitled "Alternate AC Power Sources for Station
24 Blackout Pre-Operational Tests" contains pre-requisite
25 No. 5 which reads: "A report exists that demonstrates

1 the reliability of the actual AC power sources and
2 meets or exceeds 95 percent as determined with NSAC
3 108 by equivalent methodology to meet Criterion 5 as
4 Section C.3.3.5 of Reg. Guide 1.155 based on
5 historical data of a similar type of the alternate AC
6 power sources."
7 To make its regulatory finding, the staff
8 seeks further clarification and enhancement of this
9 pre-operational test to ensure it satisfies the intent
10 of 10 CFR 50.63 and Reg. Guide 1.155.
11 I open the floor to questions on that
12 slide.
13 CHAIR STETKAR: Yes. And I understand
14 what you've just said. As part of this, are you also
15 asking about whether the 60 minutes is an appropriate
16 time for startup of the alternate AC source based on
17 heatup of the Main Control Room environment? In other
18 words, are there analyses to show that the maximum
19 temperature in the Main Control Room does not exceed
20 habitability -- suppose, for example, it got up to 190
21 degrees within 20 minutes? One would say that perhaps
22 I should start the alternate AC gas turbines in
23 something less than 20 minutes. Are you also
24 questioning that 60 minute time with respect to heatup
25 of the Main Control Room or are you just questioning

1 whether or not the pre-operational tests and --

2 MR. NOLD: There was one RAI initiated

3 that asks for calculations of that.

4 CHAIR STETKAR: Okay.

5 MR. NOLD: And they provided not a formal

6 calculation, but a calculation that made sense in my

7 mind. So there was no audit of their calculation, to

8 answer your question. It seemed reasonable what they

9 were telling me, is the best way to put it.

10 CHAIR STETKAR: And it substantially

11 longer than 60 minutes until they --

12 MR. NOLD: The maximum temperature they

13 calculated, I think was like one degree less than the

14 limit of 122, I think it was. That's the maximum

15 you'll ever get, and it will take forever to get

16 there, several hours to get there.

17 CHAIR STETKAR: Oh, that's not the

18 temperature at 60 minutes? That's the steady state--

19 MR. NOLD: Yes. That's the temperature

20 after that.

21 CHAIR STETKAR: Okay. Thanks.

22 MR. NOLD: Yes. Right.

23 CHAIR STETKAR: And it takes much longer

24 than 60 minutes to get there?

25 MR. NOLD: Yes, that was in our

1 conclusion. Right.

2 CHAIR STETKAR: Okay. Thanks. That

3 shows margin on the 60 minutes.

4 MR. NOLD: Any other questions?

5 CHAIR STETKAR: No. Any other questions

6 on this one?

7 MR. KALLAN: We'll go to the next one.

8 MR. NOLD: Okay. This slide here, it

9 captures the staff's concern pertaining to the

10 potential effects on Main Control Room instrumentation

11 and controls on a worse case essential chilled water

12 system leak within a Main Control Room HVAC system air

13 handling unit.

14 Again, GDC 4 reads in part, and I'm going

15 to read a little bit further this time with it:

16 "Structures and systems, components important to

17 safety shall be designed to accommodate the effects of

18 and to be compatible with the environmental conditions

19 associated with manual operation, maintenance testing,

20 possibly accidents including loss of coolant

21 accidents. These structures, systems and components

22 shall be appropriately protected against dynamic

23 effects, including the effects of missiles and

24 discharging fluids that may result in equipment

25 failures and for events and conditions outside the

1 nuclear unit."

2 Could you put in a figure of reactor

3 control room --

4 CHAIR STETKAR: Oh, yes. That helps.

5 MR. NOLD: Off in the right-hand corner

6 there are four air handling units. Below is the

7 actual control room envelope itself.

8 As this figure shows, there are four 50

9 percent capacity air handling units in the Main

10 Control Room HVAC system. These air handling units

11 are part of the control envelope and located directly

12 above the Main Control Room at the next higher plant

13 elevation.

14 The essential chilled water system design

15 filter to the four handling units equals 45 gallons

16 per minute. In the available worse case chilled water

17 leak, the supply and return HVAC trunk lines are

18 connected to the air handling units with the Main

19 Control Room below could provide a path for an

20 internal flood of the Main Control Room. The

21 potential exists for multiple divisions of safety-

22 related equipment being in the path of such failure.

23 The equipment drain line from each air

24 handling unit is nonsafety-related. Nonetheless, the

25 equipment drain line from the air handling unit to the

1 sump below should be adequately sized to assure that
2 it can dissipate by gravity the worst case leak of 45
3 gallons per minute. It cannot be cited as based on a
4 noncondensate role of a air handling unit which would
5 be significantly less.
6 The relevant performance of the Main
7 Control Room HVAC system and the essential chilled
8 water system will satisfy GDC 2 requirements. In
9 particular, these components are to be installed as
10 seismic Category 1 safety-related equipment Class 3.
11 To make its regulatory finding, the staff
12 seeks further standing of the air handling unit design
13 to ensure it satisfies the requirements of GDC 2 or
14 GDC 4.
15 Any questions?
16 CHAIR STETKAR: I don't have any. This
17 is an interesting one. I read something in the last
18 six months or so. It's just relevant in terms of water
19 that there actually was a flooding induced fire at a
20 nuclear power plant where water from a leak found its
21 way through things and down into some switchgear and
22 caused some arcing. And it wasn't a bad fire or
23 anything, but it's the first flooding induced fire
24 I've ever heard of.
25 MR. NOLD: Yes.

1 CHAIR STETKAR: And there had been events
2 -- I've forgotten the plan, that were leaks into I&C
3 cabinets and things like that and caused those fires.
4 So this is a good one.
5 Any other member comments, questions? If
6 not, I thank you very, very much for your
7 presentation. I think we had some good discussions.
8 There are --
9 MR. HAMAMOTO: John, a quick -- you had a
10 couple of questions that I didn't provide the
11 responses. Do you want to go over now
12 CHAIR STETKAR: Tomorrow. Tomorrow
13 morning. Because we have several. I think MHI will
14 come back with their responses. You folks can come
15 back. Staff can come back with responses.
16 Obviously, we're going to finish I think
17 well probably before noontime tomorrow morning. I
18 don't want to change the start time. We start at 8:30
19 only because there's a notice of the times that we
20 have to start and we kind of have to adhere to that a
21 bit. So we'll start at 8:30 tomorrow morning. I expect
22 to finish, you know mid-morning or so depending on
23 much of the discussions are.
24 And, again, I thank everybody: MHI and
25 the staff. And we'll reconvene tomorrow morning.

1 And we are adjourned for today.

2 (Whereupon, at 4:56 p.m. the ACRS

3 Subcommittee was adjourned to reconvene March 23, 2012

4 at 8:30 a.m.)

5

6

7

8

9

10 UNITED STATES OF AMERICA

11 NUCLEAR REGULATORY COMMISSION

12 + + + + +

13 ADVISORY COMMITTEE ON REACTOR SAFEGUARDS

14 (ACRS)

15 + + + + +

16 US-APWR SUBCOMMITTEE

17 + + + + +

18 FRIDAY

19 MARCH 23, 2012

20 + + + + +

21 ROCKVILLE, MARYLAND

22 + + + + +

23 The Subcommittee met at the Nuclear

24 Regulatory Commission, Two White Flint North,

25 Room T2B1, 11545 Rockville Pike, at 8:30 a.m., John

1 Stetkar, Chairman, presiding.
2 SUBCOMMITTEE MEMBERS PRESENT:
3 JOHN W. STETKAR, Chairman
4 CHARLES H. BROWN, JR., Member
5 WILLIAM J. SHACK, Member
6
7 NRC STAFF PRESENT:
8 ILKA BERRIOS, Designated Federal Official
9 PAUL KALLAN
10 NRC STAFF PRESENT: (cont'd)
11 HOSSEIN HAMZEHEE
12 LARRY WHEELER
13 RAUL HERNANDEZ
14 EILEEN McKENNA
15
16 ALSO PRESENT:
17 RYAN SPRENGEL
18 JAMES CURRY
19 NAOKI KAWATA
20 SHINJI KAWANAGO
21 RON REYNOLDS
22
23
24
25

TABLE OF CONTENTS


| | | PAGE |
|---|---|---|
| 1. | Opening Remarks and Objectives | 4 |
| 2. | Staff Introduction | 5 |
| 3. | Discussion of the SER Related to the US-APWR DCD Chapter 9, "Auxiliary Systems" | 8 |

1
2
3
4
5
6
7
8
9
10
11
12 P-R-O-C-E-E-D-I-N-G-S
13 (8:35 a.m.)
14 CHAIRMAN STETKAR: The meeting will now
15 come to order.
16 Today is the second day of a meeting of
17 the United States Advanced Pressurized Water Reactor
18 Subcommittee.
19 I'm John Stetkar, Chairman of the
20 Subcommittee meeting.
21 ACRS members in attendance are Charles
22 Brown and Bill Shack. Ilka Berrios of the ACRS staff
23 is the designated federal official.
24 The Subcommittee will review Chapter 9,
25 Auxiliary Systems, of the Safety Evaluation Report

1 with open items associated with US-APWR design
2 certification application.
3 Yesterday we heard presentations from
4 Mitsubishi Heavy Industries and the NRC staff. Today
5 we are going to discuss questions that were raised
6 yesterday during our meeting.
7 We have received no written comments or
8 requests for time to make oral presentations from
9 members of the public regarding today's meeting. The
10 Subcommittee will gather information, analyze relevant
11 issues and facts, and formulate proposed positions and
12 actions, as appropriate, for deliberation by the full
13 Committee.
14 The rules for participation in today's
15 meeting have been announced as part of the notice of
16 this meeting previously published in the Federal
17 Register. Parts of this meeting may need to be closed
18 to the public to protect information proprietary to
19 Mitsubishi Heavy Industries or other parties.
20 I am asking the NRC staff and the
21 applicant to identify the need for closing the meeting
22 before we enter into such discussions, and to verify
23 that only people with the required clearance and need
24 to know are present.
25 A transcript of the meeting is being kept

1 and will be made available as stated in the Federal
2 Register notice. Therefore, we request that
3 participants in this meeting use the microphones
4 located throughout the meeting room when addressing
5 the Subcommittee. The participants should first
6 identify themselves and speak with sufficient clarity
7 and volume so that they may be readily heard.
8 We will now proceed with the meeting, and
9 I will call upon I don't know who. Do you want to say
10 anything?
11 MR. KALLAN: Well, this is Paul Kallan.
12 I am the Senior Project Manager, and it is good to
13 have us back here again today. Staff is going to
14 answer the questions that you -- followup questions
15 and also MHI's, too. So --
16 CHAIRMAN STETKAR: Good. Thanks, Paul.
17 With that, I will turn it over to MHI
18 and --
19 MEMBER BROWN: Do we have to give him CPR
20 or resuscitate him over there?
21 CHAIRMAN STETKAR: No, but I heard the --
22 (Laughter.)
23 -- click into place.
24 Before we start, we will take as long as
25 we need this morning to address whatever answers that

1 both MHI and the staff have.

2 If we -- you know, I don't think anybody

3 will complain if we finish early, but whatever

4 discussion it takes to make sure that we have

5 understanding of whatever you have been able to

6 address in the last, you know, 15 or 18 hours, or

7 however long it has been, we would appreciate that. I

8 think that the process works a lot better if we can

9 get things resolved in this context.

10 So with that, I will turn it over to MHI.

11 MR. SPRENGEL: Well, good morning. This

12 is Ryan Sprengel. I'm an ASDC licensing manager.

13 I would like to, again, thank the members

14 and the NRC staff for continuing to support this

15 meeting. We did work into either the wee hours of the

16 night or the earlier hours of the morning, depending

17 on how you look at it.

18 So this is a fortunate case where we do

19 have, you know, this extra day that we can go ahead

20 and address these instead of putting them off to an

21 official transmittal later. We can go ahead and get

22 these responses now and get them on the record.

23 So hopefully it provides some good

24 clarification and responses to some of the comments we

25 heard yesterday. And I think we have some good

1 discussion material to present, and I will turn it
2 over to Jim Curry.
3 MR. CURRY: Thank you, Mr. Sprengel.
4 Okay. Good morning, Mr. Chairman. Again, my name is
5 Jim Curry. And we have some folks here at the table
6 which we will reintroduced, and some folks at the side
7 table, and, as yesterday, some additional expertise in
8 the audience. So our plan is to get you the best
9 information that we can.
10 Okay. So at the table you recall Mr.
11 Kawata, Mr. Tanigawa, and Mr. Otani. Okay. And then,
12 we have Mr. Nishio, you know Mr. Sprengel and Mr.
13 Kawanago over there at the side.
14 So what I propose is we will just go down
15 our list of what we perceive to be the Committee's
16 questions and give you some feedback.
17 CHAIRMAN STETKAR: Good.
18 MR. CURRY: And, again, in order of the
19 presentation yesterday, I think, Mr. Chairman, you
20 asked a question with regard to DCD Figure 9.1.4-2.
21 CHAIRMAN STETKAR: Yes.
22 MR. CURRY: And if I recall, your comment
23 was about the weir wall and failure of the weir wall
24 that is shown in that figure, and, really, what would
25 the water level be and time to boiling if we did

1 reduce the water level based on that weir wall
2 failure.
3 I would point you to RAI 132-1538.
4 CHAIRMAN STETKAR: 132-1538?
5 MR. CURRY: Yes, sir. Question 9.1.2-7.
6 CHAIRMAN STETKAR: I can't write that
7 fast. 9.1.2 --
8 MR. CURRY: Dash 7.
9 CHAIRMAN STETKAR: -- dash 7.
10 MR. CURRY: Right. So we provided the
11 information that I am just going to summarize for you
12 in that RAI response. Big picture is that if we fail
13 that weir wall, the water level is reduced to about
14 six feet below the starting point, the existing water
15 level.
16 So that gives us quite a bit of room,
17 still. And it's because that water isn't lost, it
18 just flows into the refueling canals.
19 CHAIRMAN STETKAR: Okay. I think you
20 misunderstood my question. My question was simply,
21 suppose that the level is at the height of the weir
22 wall. I'll worry about how it got there. Suppose
23 that it is a level at the height of the weir wall.
24 How long does it take to reach boiling? And how long
25 does it take to reach fuel damage? I'll worry about

1 how it got there.

2 MR. CURRY: Okay. And --

3 CHAIRMAN STETKAR: Because I will

4 guarantee that there -- in a probabilistic sense there

5 are draindown scenarios that can drain the water to

6 that level, that involve flow paths that do not just

7 involve failure of the weir wall and filling the

8 adjacent -- immediately adjacent volume. I guarantee

9 you that there are drain-down paths.

10 MR. CURRY: Okay.

11 CHAIRMAN STETKAR: I haven't personally

12 identified all of them. That was my follow-on

13 question to try to get a handle on where they might

14 be. But I will guarantee you that there are drain-

15 down paths.

16 MR. CURRY: Well, with that --

17 CHAIRMAN STETKAR: They may require human

18 errors during refueling operations when the weir --

19 when weir gates are removed. But I guarantee you that

20 there are drain-down paths somewhere. I have never

21 seen a plant where I haven't been able to find at

22 least one.

23 MR. CURRY: Okay.

24 CHAIRMAN STETKAR: So the question was

25 not presuming some combination of failures. The

1 question was simply suppose that the level is at the
2 height of the weir wall. I wanted to confirm what
3 that level really is. And given that, what is the
4 time to heat up to boiling and the time to heat up --
5 let's call it fuel damage rather than fuel uncovery.
6 MR. CURRY: We appreciate that. Let me
7 just kind of mention -- I mentioned the failure of one
8 weir wall. Our analysis included complete connection
9 of all cavities with all --
10 CHAIRMAN STETKAR: Okay.
11 MR. CURRY: -- weir walls out.
12 CHAIRMAN STETKAR: Okay.
13 MR. CURRY: So --
14 CHAIRMAN STETKAR: So you at least filled
15 the other cavities.
16 MR. CURRY: Yes, sir.
17 CHAIRMAN STETKAR: Not just the --
18 MR. CURRY: Now, that's a different
19 number.
20 CHAIRMAN STETKAR: Sure.
21 MR. CURRY: That still gives us about 12
22 feet above the fuel --
23 CHAIRMAN STETKAR: Yes. I understand
24 that, because of --
25 MR. CURRY: Okay.

1 CHAIRMAN STETKAR: -- volumes of those
2 cavities, yes.
3 MR. CURRY: Okay. So having said that,
4 so that we have connected everything and we have done
5 that analysis, your thought is that you would still
6 like to know, well, let's just say we are at a
7 level --
8 CHAIRMAN STETKAR: That's right.
9 MR. CURRY: Okay. Let me --
10 CHAIRMAN STETKAR: It can't get any --
11 see, the point is that it can't be any worse than
12 that. And as long as there are drainage pathways that
13 can get you to that water level, I am trying to
14 understand what the bounds are in terms of your
15 relative times. I know what the heatup time is given
16 minimum water level.
17 You've done a heat-up calculation now at
18 that -- or perhaps it is in this RAI response -- at
19 that -- what is called an intermediate level given
20 just transference of the upper part of the volume into
21 the adjacent -- you know, what do you want to call
22 them -- cavities or adjacent volumes.
23 MR. CURRY: Right. If you connected all
24 of those volumes, we know what the level would be.
25 CHAIRMAN STETKAR: Yeah, yeah. And I'm

1 asking for the most -- the limiting, if the -- if you
2 were draining to the bottom of the weir wall.
3 The reason I ask this is that we are not
4 talking about PRA here. This is not a risk-informed
5 licensing application, so I don't want to bring in the
6 notion of PRA. However, people have performed PRAs of
7 shutdown modes that indeed have examined
8 configurations where the core is off-loaded into the
9 spent fuel pool the same way that you do it.
10 You have a fuel transfer tube, you are
11 connected to the reactor cavity, which is flooded up
12 -- I mean, it is a standard plant design -- and have
13 identified, based on plant-specific configurations and
14 operational evolutions, errors or equipment failures
15 that can open up drain paths.
16 Now, some of those drain paths may be
17 from the primary system, but if the transfer gate is
18 open you are now in an interconnected volume. So
19 essentially you can drain the fuel pool into the
20 containment through the transfer canal.
21 Now, you have a time available for that,
22 so, like I said, I don't want to get into the
23 probabilistics of all of this stuff, but indeed you
24 can drain down to those weir wall elevations. In some
25 cases, it requires drainage into the containment.

1 In some cases it requires drainage --
2 that's why I asked you about the drain lines from the
3 transfer canal -- the transfer tube itself, or drain
4 lines from the interconnected volumes, the fuel
5 transfer -- the refueling canal and the other -- the
6 cask volume, things like that.
7 They may be very rare events. And as I
8 said, I am not getting into PRA space here. On the
9 other hand, understanding what the margins may be
10 under those conditions gives you a sense of timing and
11 design margin for those types of events. That's the
12 reason I asked the question.
13 You know, I don't want to prejudice
14 studies. I have seen studies where indeed the bottom
15 of the weir wall was below the top of the active fuel,
16 which obviously is not here --
17 MR. CURRY: Not the case here.
18 CHAIRMAN STETKAR: -- because people had
19 never thought of that.
20 MR. CURRY: Right. Well, I think as long
21 as the Committee understands what we have done --
22 CHAIRMAN STETKAR: Yes.
23 MR. CURRY: -- and that is what we want
24 to be sure. Let me just give a nod to the folks in
25 the audience, you know, or my colleagues here. I do

1 not believe that we have a heat-up calculation for the
2 water at that level, at the weir wall level. So we
3 are not prepared to give that to you --
4 CHAIRMAN STETKAR: Okay. Thanks.
5 MR. CURRY: -- today.
6 CHAIRMAN STETKAR: Thanks. As I said, I
7 have to apologize, we don't get all of the RAIs,
8 mostly because we ask for specific ones as they come
9 up either in discussions like this or if they clearly,
10 during our reviews of the major -- of the SER identify
11 specific issues. The problem is if we ask for all of
12 them, we would get all of them, and we'd now have
13 10,000 pages to read.
14 Does the response to this RAI question
15 include the heat-up time, or does it only include the
16 equilibrium water level?
17 MR. CURRY: I think it includes only the
18 equilibrium water. The heat-up time is in another
19 calculation.
20 CHAIRMAN STETKAR: Okay.
21 MR. CURRY: And of course, once again,
22 we'll point out we haven't lost the water.
23 CHAIRMAN STETKAR: No, that's right.
24 That's right.
25 MR. CURRY: In these situations, you

1 still have a heat sink.

2 CHAIRMAN STETKAR: Yes. And if you only

3 do -- well, I guess if you are only doing a heat-up to

4 boiling calculation, it doesn't make any difference.

5 MR. CURRY: Right.

6 CHAIRMAN STETKAR: Heat-up to fuel

7 damage, once you get down below the weir wall, it --

8 MR. CURRY: Right.

9 CHAIRMAN STETKAR: -- then becomes

10 different.

11 MR. CURRY: Right.

12 CHAIRMAN STETKAR: Okay.

13 MR. CURRY: But the scenario that you are

14 talking about, I do not think we are prepared to talk

15 about that scenario today.

16 CHAIRMAN STETKAR: Okay.

17 MR. CURRY: Agreed?

18 MR. KAWATA: Yes.

19 CHAIRMAN STETKAR: And for the benefit of

20 the record and the benefit of the staff, I am not

21 necessarily talking about something that is in the

22 licensing basis for the plant either, because, as I

23 said, we have identified these things during

24 probabilistic risk assessment.

25 So I don't want to -- you know, I don't

1 necessarily want the staff to raise this as a
2 particular concern and go on a witch hunt for draining
3 pathways. I'm just trying to understand the plant
4 design for our Committee's benefit.
5 MR. CURRY: Well, and we appreciate that,
6 because clearly -- clearly, it is not a design basis.
7 CHAIRMAN STETKAR: Exactly.
8 MR. CURRY: We probably think it is not a
9 credible event. But that would be our view.
10 CHAIRMAN STETKAR: The word "credible" is
11 something we try not to use in the Subcommittee, so --
12 MR. CURRY: Mr. Kawanago?
13 MR. KAWANAGO: We understand your
14 comment. Could you give me a little bit of time?
15 CHAIRMAN STETKAR: Sure.
16 MR. KAWANAGO: It is a long meeting.
17 CHAIRMAN STETKAR: So, you know, the good
18 and bad things about the Subcommittee presentations
19 especially is that in many cases we are trying to
20 understand perhaps some details or interconnectivity
21 in the plant design that you may not necessarily enter
22 into in the licensing process, the design -- you know,
23 the compartmentalized licensing process.
24 And some of these things kind of help us
25 to understand that a little bit, and that is the

genesis of some of these questions. We recognize that, you know, this has visibility, and things like that. And, again, I encourage the staff to take the context of our Subcommittee meetings into consideration.

So in this particular instance, I would hope that it is -- it doesn't generate RAIs and other areas of concern, because I don't see anything in the design that makes this plant any more or less vulnerable to these types of drain-down scenarios than any other currently operating plant or any other new reactor that we have seen.

So it is not -- you know, it is not a design-specific vulnerability. It is not anything. It is just simply a question.

MR. KAWANAGO: We tried to understand your question. This is Shinji Kawanago from MNES. We tried to confirm again what it is you are exactly asking on that question point. And because we would like to explain what is actually the drain line of this spent fuel pit. And the spent fuel is the data you also asked about and drain line in the spent fuel pit. And the spent fuel pit or this cask pit, basically we don't have any drain line.

CHAIRMAN STETKAR: There are no drain

1 lines in the cavity? The cask --

2 MR. KAWANAGO: No. No.

3 CHAIRMAN STETKAR: How do you drain

4 those?

5 MR. KAWANAGO: It is a pump out.

6 CHAIRMAN STETKAR: Oh, you pump it out.

7 You put a submersible --

8 MR. KAWANAGO: Yeah.

9 CHAIRMAN STETKAR: Oh, okay. Good.

10 MR. KAWANAGO: That is the basic system.

11 CHAIRMAN STETKAR: You are better than

12 some people.

13 (Laughter.)

14 MR. KAWANAGO: And what we needed to

15 assume -- and how do you say it is not the PRAs --

16 CHAIRMAN STETKAR: Right.

17 MR. KAWANAGO: -- and the discussion.

18 However, I mean, we need to assume the gate failure

19 and the water go to the -- a canal or cask pit.

20 Basically, I don't want to say the PRA scope, but in a

21 single failure, the water will go to the canal. And

22 if we assume the additional gate failure and the water

23 going to the -- in a cask pit, okay, that is basically

24 worst case.

25 So, again, there is no drain piping, so

1 now if they are willing to assume some failure --
2 operational, misoperational, or something like that --
3 the water will go to the canal or cask pit. Okay?
4 So, but still keep the total volume of the water,
5 inventory still keep.
6 So of course when we calculate the
7 boiling time, and then it is reduced from the 2.5
8 hours to the two hours or -- we have those -- such
9 calculations. And, basically, we still keep the
10 boiling time with -- it's approximate two hours. That
11 is our calculation we have.
12 CHAIRMAN STETKAR: And I understand that,
13 and I was not trying to -- I'm glad to hear you don't
14 have drain lines from those other volumes. That is a
15 good thing. I will still stand by my initial
16 statement that I guarantee you I can find a drain
17 path.
18 And to give you a hint of what I'm
19 thinking about is if you look at Figure 9.1.4-2, the
20 elevation of the top of the reactor vessel -- I'm
21 assuming this isometric is about right -- seems to be
22 just about the same elevation as the bottom of the
23 slots in the weir wall.
24 There was an event at a nuclear
25 powerplant in the United States a number of years ago.

1 This is not the specific configuration for that event.
2 But because of a valving error during maintenance,
3 they managed to drain the refueling water storage tank
4 into the containment through the residual heat removal
5 system, because of a valving error during maintenance.
6 So that -- and the residual heat removal
7 system, for example, will be connected to the loops in
8 the reactor coolant system. It will be operating
9 during refueling. The fuel transfer tube will be
10 open. You now have a completely connected volume of
11 water.
12 And there are drainage paths through
13 maintenance errors or equipment failures that indeed
14 could drain that volume down to the top of the reactor
15 vessel through the loops into the containment at full
16 connected volume. That is one way you can get down to
17 the bottom of that weir wall.
18 Now, I'm not talking about time. I'm not
19 talking about time available for, you know, operators
20 to isolate things. But there is a drainage path.
21 There are mitigation possibilities, but, as I said, I
22 guarantee I can find you a drainage path that will get
23 you to the bottom of the weir wall.
24 MR. CURRY: And I think we understand
25 your concern. If you could just give us one moment to

1 confer --

2 CHAIRMAN STETKAR: Sure.

3 MR. CURRY: -- we'll make sure we have a

4 path forward here.

5 (Pause.)

6 MR. KAWANAGO: We understand.

7 CHAIRMAN STETKAR: You understand? Okay.

8 MR. KAWANAGO: We understand your point.

9 CHAIRMAN STETKAR: I was going to say, in

10 the interest of -- the problem is we are on the public

11 record here, and long silences --

12 MR. CURRY: Absolutely. We appreciate

13 it, sir. We understand the question, and we --

14 CHAIRMAN STETKAR: Okay, good.

15 MR. CURRY: -- will take that as an

16 action.

17 CHAIRMAN STETKAR: Again, I will say it

18 again for the record, for the staff, I personally hope

19 that there aren't any RAIs that come out of this,

20 because it is simply us trying to understand a bit

21 about margins.

22 MR. CURRY: And that is very helpful, and

23 we appreciate you putting it in that context.

24 CHAIRMAN STETKAR: Yes.

25 MR. CURRY: Thank you.

1 CHAIRMAN STETKAR: And you did confirm
2 there are no drain lines from the refueling canal, the
3 cask pit, or the fuel inspection pit, or the transfer
4 tube itself.
5 MR. CURRY: That is correct.
6 CHAIRMAN STETKAR: Good.
7 MR. CURRY: As Mr. Kawanago said.
8 CHAIRMAN STETKAR: Good. And as I said
9 there, in that case, you are indeed -- this design is
10 indeed less vulnerable to some of these drain-down
11 events than some others that we have looked at.
12 MR. CURRY: Okay. Thanks.
13 CHAIRMAN STETKAR: So that is -- that's
14 why we ask these questions. You know, this gives us
15 confidence that you are even less vulnerable than
16 other designs to these types of events.
17 MR. CURRY: We appreciate that insight.
18 That is great.
19 All right. Let us -- so we have
20 discussed basically two of your questions from
21 yesterday, the weir wall and the drain lines.
22 I think the question that Mr. Brown had
23 was about the instrumentation. So as long as we are
24 talking about the spent fuel pool, location of
25 instrumentation, so why don't we go to that

1 discussion.

2 So Mr. Kawata put together this -- and

3 his team put together this slide for us, which kind of

4 summarizes a little bit of the history. So in DCD

5 Rev 3, in terms of level indication, we had two non-

6 safety indications, and they were continuous.

7 All right. And we had a low low level

8 pump trip -- pump trip on low low level. In RAI 756-

9 5753, that was changed to make two or to add two

10 safety grade level switches for the pump stop. We now

11 have -- correct?

12 MR. KAWATA: That's right.

13 MR. CURRY: Okay.

14 CHAIRMAN STETKAR: And those -- Jim, just

15 before -- and do those same safety grade level

16 switches also initiate isolation of the non-safety --

17 MR. CURRY: Well, I think you are

18 anticipating that --

19 CHAIRMAN STETKAR: I'm sorry. Never

20 mind. Never mind. I'm in the wrong system. I'll be

21 quiet. Go on. I'm sorry.

22 MR. CURRY: Not a problem, because you

23 are probably anticipating maybe the third line.

24 CHAIRMAN STETKAR: Yeah.

25 MR. CURRY: We do have an open item.

1 CHAIRMAN STETKAR: Okay.

2 MR. CURRY: And which adds isolation of

3 non-seismic --

4 CHAIRMAN STETKAR: Okay. That's -- I'm

5 sorry, and I was getting ahead of you.

6 MR. CURRY: Right. So that is where we

7 are in terms of the level indication.

8 Now, the locations -- I think there was a

9 question on locations. So near --

10 MEMBER BROWN: Physical locations?

11 MR. CURRY: Physical locations --

12 CHAIRMAN STETKAR: And temperature?

13 MR. CURRY: That's true. I mean, do we

14 have a temperature? Yeah.

15 MEMBER BROWN: I'm not finished with the

16 level one yet.

17 MR. CURRY: Okay. Let's finish with the

18 level.

19 MEMBER BROWN: Where the continuous type

20 -- where is that read out?

21 MR. CURRY: Control room.

22 MR. KAWATA: Yes, both control room and

23 the LOCA.

24 MEMBER BROWN: Okay. The reason I ask

25 that is that in the RAI where it talks about in your

1 all's discussion the DCD change, in your all's answer
2 you talked about if you had to recover, it would be
3 done with confirmation of SSP, SFP temperature, and
4 the water level locally.
5 So there was an inconsistency between
6 your answer in the 5753 -- that's why I was asking
7 for, you know, just a little tabular readout of
8 wherever these go, and then make sure it's reflected.
9 When I looked at the table that you all modified, I
10 did not see the continuous one even listed. It was
11 just the two low level switches that was in -- let me
12 find the right table number.
13 MR. KAWATA: Table 3D --
14 MEMBER BROWN: 3D-3. Two, excuse me.
15 There is only two level gauges listed there. And
16 based on the designation, those appear to be the two
17 switches.
18 MR. KAWATA: We only show the safety-
19 related, Table 3D-3. The continuous -- whatever it
20 is, non-safety data. So we don't show that non-safety
21 data needs to be mentioned in 3D.
22 CHAIRMAN STETKAR: I can kind of see the
23 evolution of this thing. The questions were raised
24 about need for safety-related instrumentation, so it
25 has evolved from two non-safety, and now the RAI

1 responses are focused on what they are making safety,
2 and now the follow-on things are what functions are
3 going to be performed by the safety-related. And
4 apparently the single remaining non-safety-related
5 continuous readout channel has been --
6 MEMBER BROWN: Lost in the shuffle.
7 CHAIRMAN STETKAR: Yeah. It's still --
8 it's there, but it has been lost, you know, out of the
9 context of the discussions regarding, in particular,
10 safety-related instrumentation.
11 MEMBER BROWN: Well, I am just kind of
12 curious. We don't have a safety-related, you know,
13 gauge that you can read. It's a non-safety-related,
14 with nothing but a low level switch. I mean, to me it
15 went from two non-safety-related gauges to no safety-
16 related gauges, no visibility of the level in the main
17 control room other than with a non-safety-related
18 gauge.
19 And they used to have multiple levels of
20 -- well, actually they have a high and a low level,
21 although the figure that was provided in there only
22 showed a low.
23 MEMBER SHACK: That's non-safety.
24 MEMBER BROWN: What?
25 MEMBER SHACK: That's non-safety.

1 MEMBER BROWN: No, I'm -- yeah, on the
2 continuous one. And on the safety ones it is only a
3 low low amount. It's not a low as well. So there is
4 only one level indicator. I mean, I'm assuming --
5 MR. CURRY: The redundant safety level
6 switches, right?
7 MEMBER BROWN: Well, they each feed their
8 trains --
9 MR. CURRY: Right.
10 MEMBER BROWN: -- for the interlock
11 purposes. I mean, at least that's the words said,
12 that they were interlocked with their -- with one --
13 each with one of the two trains, whichever way you
14 define them.
15 MR. CURRY: So you are correct, that is
16 where we are at this point. We are done at safety
17 level switches, non-safety, continuous readout.
18 MEMBER BROWN: The annunciation -- you
19 say a setpoint. How low on the non-safety gauge?
20 MR. KAWATA: Yes.
21 MEMBER BROWN: I presume that is an alarm
22 setpoint?
23 MR. KAWATA: Yes. We have alarms.
24 MEMBER BROWN: Annunciating?
25 MR. KAWATA: In safety items.

1 MEMBER BROWN: Well, those annunciate
2 also. I think you said that in the words. The safe
3 ones do annunciate also in the main control room.
4 MR. KAWATA: That's right. We use a non-
5 safety-related instrument for normal makeup of SFP, so
6 setpoint of the load for the non-safety, the loads are
7 about four inches for the normal water level. The
8 setpoint is low low for safety-related. The setpoint
9 is below -- about four feet from the normal water
10 level.
11 The purpose of that low low setpoint is
12 to maintain the water level above the suction level --
13 MEMBER BROWN: I understand that.
14 MR. KAWATA: -- over the suction rate for
15 pump protection. So for safety-related, to have only
16 one setpoint is adequate, because -- so only one
17 setpoint to maintain the pump integrity.
18 MEMBER BROWN: So I presume it is higher
19 than the low low, the setpoint would be higher?
20 MR. CURRY: One moment.
21 CHAIRMAN STETKAR: I think that's what he
22 said. He said the low level setpoint is four inches
23 below the normal level, and the low low is four feet I
24 think is what they said.
25 MEMBER BROWN: All right.

1 MR. CURRY: The low low is for the pump
2 protection.
3 MEMBER BROWN: Yeah. No, I understand
4 that point. I just -- I missed the specific level. I
5 didn't catch that. Well, if that's what it is, I just
6 --
7 CHAIRMAN STETKAR: I mean, in some sense,
8 someone yesterday asked the question about, how does
9 all of the current orders --
10 MEMBER BROWN: Well, that's ultimately
11 where I was going with --
12 CHAIRMAN STETKAR: -- comply to a design
13 certification. And the answer we got is the staff
14 doesn't know yet.
15 MEMBER BROWN: Yeah. And --
16 CHAIRMAN STETKAR: So I'm hoping that by
17 the time we see the final SER, with no open items, I'm
18 hoping that the staff has the resolution of how the
19 orders apply, either to the design certification or to
20 the COL applicant, resolved by that time. Otherwise,
21 I suspect we are going to have -- you know, the
22 Committee may have questions about that.
23 MEMBER BROWN: Well, there are several of
24 us that have brought up the issue of the
25 instrumentation and the lack of, you know, continuous

1 implementation and the circumstances under which the
2 orders are being issued. And we -- so, yes, there's a
3 couple of level gauges, that's fine if they're non-
4 safety-related. But there are a couple of level
5 gauges and then all of a sudden we don't have them
6 anymore. So --
7 CHAIRMAN STETKAR: I mean, at least for
8 me this clarifies --
9 MEMBER BROWN: Yes, I --
10 CHAIRMAN STETKAR: -- the current concept
11 of the design. Now, how that may or may not change
12 moving forward in light of the orders, in the context
13 of the design certification, I don't think any of us
14 know that.
15 MEMBER BROWN: No, I understand.
16 CHAIRMAN STETKAR: And the message is,
17 this is still Phase 3 of the staff's review with open
18 items, and we will see this again, you know, in
19 Phase 4. And as I said, I hope that by the time we
20 see Phase 4 the staff will have sorted out the
21 applicability of the orders, you know, in particular
22 to the two in progress. I mean, the same questions
23 apply equally to USEPR.
24 MEMBER BROWN: Yes. I'm just respective
25 of at least one other Committee member who, along with

1 me, has raised this particular point, trying to make
2 it clear that this -- there will probably be raised
3 eyebrows at the -- during the full Committee.
4 I would argue that the full Committee may
5 or may not agree with this, but, I mean, it will be
6 brought up again in terms of the -- I don't want to
7 say lack of, but the reduced amount of indication or
8 the -- that may be available under some circumstances
9 if you needed it. So it's -- and its ability to
10 service people in the main control room.
11 Right now when I look at this, and I have
12 finished reading the words, plus one other
13 supplemental RAI that was given to me by the staff
14 after our other conversation yesterday, there were --
15 there are still a few inconsistencies. I'm not going
16 to sit here and grind through those.
17 This clarifies exactly what you are
18 saying you are going to, and I would just encourage
19 the staff and you all to make sure that the DCD
20 changes are consistent. And I -- like you say, you
21 only address safety-related stuff in the tables, but
22 it would seem in the DCD, in the Tier 2 stuff, you
23 ought to at least give an indication of where the non-
24 safety unit reads out. Is it remote shutdown console
25 as well as the main control room, etcetera? That just

1 seemed to be lacking relative to where those are.
2 Same thing -- and I think both the
3 temperatures, if you can flip over to the temperature,
4 I think both of those are continuous, and they are
5 both safety-related. And, again, where is that
6 temperature indication clearly articulated as opposed
7 to just locally?
8 A couple of your words in your
9 discussions talked about recovering locally, which
10 gave the implication that there was no remote
11 indication. Whereas -- and that's why I'm saying on
12 the other one, the level one, it just says, "I've got
13 continuous," but where is it? That wasn't -- it
14 wasn't crisply stated. In fact, it wasn't explicitly
15 stated.
16 MR. CURRY: We appreciate that, and we
17 understand your point about -- I think just to repeat
18 back to you -- where is this instrument? Where can
19 operators see and have this information?
20 MEMBER BROWN: And where the temperature
21 was located in the pool itself. That was the other
22 question.
23 MR. CURRY: Fairly high, two of them,
24 safety-related at diagonal --
25 MEMBER BROWN: Diagonally across the

1 pool. You say "fairly high." What does that mean?
2 MR. CURRY: I don't know if we -- I don't
3 know the exact elevation, but I --
4 MEMBER BROWN: It didn't seem to be
5 specified. I couldn't find any --
6 MR. CURRY: Right. And I don't --
7 MEMBER BROWN: -- numbers.
8 MR. CURRY: I don't have that information
9 here, but I guess I just wanted to get across the
10 point that it is high in the pool and, you know,
11 indicative of, you know, temperature in the pool area.
12 But it is not high and low.
13 MEMBER BROWN: Still above the fuel
14 level, top of the fuel --
15 MR. CURRY: Oh, yes, sir. Oh, yes, sir.
16 MEMBER BROWN: -- both of them above the
17 top --
18 MR. CURRY: Oh, yes, sir. Absolutely.
19 MEMBER BROWN: So once the water level
20 got below the fuel, or the top of the fuel, you would
21 not have any indication of temperature, is that
22 correct?
23 MR. CURRY: That is absolutely true.
24 CHAIRMAN STETKAR: Yes, you would
25 probably be measuring air.

1 MEMBER BROWN: Pardon?

2 CHAIRMAN STETKAR: You would be measuring
3 air at that point.

4 MEMBER BROWN: Well, no, you would be.
5 If you don't have any sensors below that level, then
6 you would be measuring air, which would be kind of
7 useless.

8 CHAIRMAN STETKAR: Well, I suspect until
9 that point it will be somewhere around 100 degrees C.

10 MEMBER BROWN: Well, once it starts
11 boiling, it is what it is. It doesn't go any -- it
12 doesn't change.

13 MEMBER SHACK: 100 degrees C is probably
14 a pretty good guess, yes.

15 MEMBER BROWN: Okay.

16 CHAIRMAN STETKAR: Anyway, to kind of
17 summarize this, I --

18 MEMBER BROWN: We are probably not
19 finished with it, that is the --

20 CHAIRMAN STETKAR: I don't think we are
21 finished, but I think that this information at least
22 gives us enough to understand what the current
23 snapshot of the design is.

24 MEMBER BROWN: Can we get a copy of these
25 viewgraph pages?

1 CHAIRMAN STETKAR: We will get them.
2 It's part of the public record now, so -- by the way,
3 make sure -- you do realize that anything you show
4 today is part of the public record. That's the
5 caution that I read earlier regarding proprietary
6 information. Keep that in mind as we get into some of
7 these discussions, because everything that is shown
8 here and anything that is said is part of the public
9 record.
10 So if during these discussions -- and I
11 would emphasize -- be sensitive if we delve into
12 proprietary design information, let us know. We can
13 close the meeting. We have the latitude to do that.
14 It is simple to do. But I want to caution you about
15 that, because we are getting into some details.
16 So far you have only mentioned things
17 that are RAI responses, which are also, you know, on
18 the docket. But if we get too far afield here, be
19 sensitive to that.
20 MR. CURRY: Thank you, sir. We
21 appreciate that.
22 CHAIRMAN STETKAR: And to just summarize,
23 you know, it is all we can do at Phase -- we now have
24 a snapshot of the current version of the design to
25 support Phase 3 of our review. We will see the SER

during Phase 4 with no open items, and I hope that by that time the whole integration or decisions regarding the integration of the orders with respect to this particular, either design certification or COLA, will have been ironed out.

And, you know, at that point in Phase 4 we can take that information, plus whatever the final resolution of the remaining RAIs and open items are, into consideration when we write our final letter, you know, on this chapter.

MEMBER BROWN: Could you flip back to the previous slide for just a minute? There is another RAI down there, 57.23, which I wanted to make a note of. That's the open one.

MR. CURRY: One moment. Is this the right -- yeah, okay.

MEMBER BROWN: I take it you all have either answered that and it hasn't been resolved with the staff, or what have you? It says open, so --

MR. CURRY: Yes. It is open. I'm not sure whether we've given a draft to the staff or whether we have formally submitted that, but yeah.

MEMBER BROWN: That's fine. That's good enough. Okay. I have it, so --

MR. CURRY: Okay. All right. Related to

1 the fuel pool, if you recall yesterday there was a
2 question -- I think it was yours, Mr. Chairman --
3 about the RWSP line, the cleanup of the RWSP, and
4 fundamentally how do we isolate that cleanup line, the
5 purification loop around --
6 CHAIRMAN STETKAR: Yes.
7 MR. CURRY: -- the spent fuel pool
8 cooling system. And on one of our slides we showed a
9 connection to the RWSP and explained that we use the
10 system for RWSP cleanup.
11 So we have confirmed there is no
12 automatic isolation on that line. We would expect
13 that line to be used only rarely during or after
14 coming out of an outage. If there were leakage from
15 that line, we would probably notice it first on some
16 sump-level indication. We don't think the operation
17 of the valves would be affected. I think you
18 questioned whether they would be underwater if we had
19 to close the valves.
20 CHAIRMAN STETKAR: Yeah. Either the
21 inlet valves -- you replaced the -- you have automatic
22 isolation valves.
23 MR. CURRY: You're talking about that
24 connection to the RWSP.
25 CHAIRMAN STETKAR: The automatic

1 isolation valves -- and I've forgotten -- the problem
2 is I only have a Rev 3 -- you had it yesterday on one
3 of your slides I think.
4 MR. CURRY: Yes, if I could get the
5 presentation up from yesterday. Thanks, Ilka.
6 CHAIRMAN STETKAR: And I've forgotten --
7 unfortunately, the only thing I have printed out is --
8 and I know -- is the Rev 3 -- it's Slide 15 of your
9 SFPS -- SFPCS presentation. There you go.
10 Now, did I recall yesterday that in
11 interim Rev 4 the -- did you say you changed the
12 outlet valves? Right there. Those are now automatic
13 isolation valves. That doesn't help the RWSP.
14 MR. CURRY: This one.
15 CHAIRMAN STETKAR: Yeah, yeah. And the
16 inlet valves up at the top are still manual valves?
17 MR. CURRY: So sorry. So this is the
18 path that we are talking about.
19 CHAIRMAN STETKAR: Yes.
20 MR. CURRY: Right? Okay.
21 CHAIRMAN STETKAR: Yes. Inlet there
22 through the demineralizer back through the common
23 cross-tie line back to the -- that path.
24 MR. CURRY: Right. Here is the automatic
25 extension on --

1 CHAIRMAN STETKAR: Yes.

2 MR. CURRY: Okay. Right. And I think

3 that was your question --

4 CHAIRMAN STETKAR: That's right.

5 MR. CURRY: -- from yesterday.

6 CHAIRMAN STETKAR: Yeah, yeah.

7 MR. CURRY: So as I mentioned, we

8 researched that there is no automatic isolation. We

9 would expect operator action, you know, to isolate

10 that path. You asked how often it would be used. It

11 would be rarely used.

12 CHAIRMAN STETKAR: And that is based on

13 experience from similar --

14 MR. CURRY: Right. And the purpose.

15 CHAIRMAN STETKAR: That makes sense. I

16 was just curious from -- some plants that have stand-

17 alone refueling water storage tanks have a little

18 continuously operating cleanup loop on them. I mean,

19 I have seen many designs. This one is -- you know,

20 because of your pit, you use this. I was just

21 curious, based on the operating experience, how

22 frequently people need to do cleanup on that. It's

23 just a little different than a tank.

24 MR. CURRY: Okay.

25 CHAIRMAN STETKAR: And those valves that

1 show on this drawing around the demineralizers are all
2 located in the demineralizer rooms, is that correct?
3 MR. CURRY: These valves?
4 CHAIRMAN STETKAR: Yes. I mean, that
5 doesn't help the RWSP in particular here.
6 MR. CURRY: No, no.
7 CHAIRMAN STETKAR: But that was for other
8 concerns about potential draining of the spent fuel
9 pit.
10 MR. CURRY: Well, actually, we can talk
11 about that one.
12 CHAIRMAN STETKAR: Okay.
13 MR. CURRY: Let's talk about that
14 question next. We have that on our list. I think
15 that question had to do with manual -- well, the
16 question that we had on the list was the floor drain
17 question from that area, and you had asked a question
18 --
19 CHAIRMAN STETKAR: Oh, yes.
20 MR. CURRY: -- about closing the floor
21 drains, why were the floor drains --
22 CHAIRMAN STETKAR: Not from this area.
23 That was from the -- that was from the safety-related
24 rooms.
25 MR. CURRY: Okay.

1 CHAIRMAN STETKAR: That was a different
2 question regarding the --
3 MR. CURRY: Okay.
4 CHAIRMAN STETKAR: -- equipment and floor
5 drain system --
6 MR. CURRY: Right.
7 CHAIRMAN STETKAR: -- in particular, that
8 -- I don't recall having a question about floor drains
9 from this --
10 MR. CURRY: Okay.
11 CHAIRMAN STETKAR: -- this room.
12 MR. CURRY: I think you're correct.
13 CHAIRMAN STETKAR: I was just curious
14 about if someone -- if the operators had to go in and
15 locally isolate this part of the system, either
16 because of leakage --
17 MR. CURRY: These valves, okay.
18 CHAIRMAN STETKAR: -- those valves, you
19 know, now the -- and even the other -- the valves that
20 you have made automatic, the return valves to the
21 spent fuel pool, are those valves physically located
22 in the room with the demineralizers, or are they
23 outside of that room? In other words, are they
24 accessible, and could they be affected by flow?
25 MR. CURRY: One moment.

1 (Pause.)

2 Maybe, Mr. Chairman, we can check on

3 that. I don't think we know the answer right now.

4 CHAIRMAN STETKAR: Okay.

5 MR. CURRY: Maybe we can put that to bed

6 before we leave today.

7 CHAIRMAN STETKAR: Thanks.

8 MR. CURRY: All right. I think there was

9 a question -- I think this kind of takes care of our

10 questions on 9.1. that we had from the Committee.

11 There was a question on -- or I should say 9.1.3 to be

12 more exact. I think there was a question in 9.1.4

13 about the polar crane, seismic restraints on the polar

14 crane.

15 CHAIRMAN STETKAR: Not the polar crane,

16 the cask --

17 MR. CURRY: Well, the cask crane --

18 CHAIRMAN STETKAR: -- the cask crane. It

19 does?

20 MR. CURRY: -- restraint. It does. Are

21 you answering or --

22 CHAIRMAN STETKAR: No. You said polar

23 crane. The question is: does the cask --

24 MR. CURRY: Have the same restraints.

25 CHAIRMAN STETKAR: -- have the same

1 restraints for, you know, tipping or preventing
2 derailment basically.
3 MR. CURRY: Right. And the answer is
4 yes.
5 CHAIRMAN STETKAR: It does. Good. Thank
6 you.
7 MR. CURRY: All right. We had a question
8 in 9.2.2, and that -- that really came up with regard
9 to the 10 minutes for restoring cooling to the RCP
10 pumps.
11 CHAIRMAN STETKAR: Yes.
12 MR. CURRY: And you questioned, well,
13 what is the basis for the 10 minutes?
14 CHAIRMAN STETKAR: Yes.
15 MR. CURRY: And whether we would get into
16 any trouble with vibration before that time. So the
17 limiting reason for that cooling is bearing cooling.
18 CHAIRMAN STETKAR: That is bearing
19 cooling.
20 MR. CURRY: Right. But heatup of the
21 bearing versus the motor or things like that. So it's
22 the bearing and it's a manufacturer's recommendation
23 and the manufacturer tells us, you know, if you can
24 get cooling back to the bearings within 10 minutes
25 there is no significant vibration of the pump.

1 CHAIRMAN STETKAR: And just let me make
2 sure, Jim, so that I understand it, because everything
3 that I had read seemed to have -- seems to say motor
4 cooling. But you're saying it is indeed bearing
5 cooling. Because, you know, there are three coolers.
6 There is the upper bearing lube oil cooler, the lower
7 bearing lube oil cooler, and, you know, what is called
8 the motor cooler, which I'm assuming is the motor
9 winding cooler.
10 MR. CURRY: Right. And I think the
11 question was, which one of these guys is limiting.
12 CHAIRMAN STETKAR: Yes.
13 MR. CURRY: And based on our research,
14 the driver for the 10 minutes is the bearing.
15 CHAIRMAN STETKAR: Is the bearing, and
16 that is -- actually, from my experience that is
17 normal. That's why I was asking the question about
18 why the motor was limiting. So it is the bearings,
19 and it just --
20 MR. CURRY: Manufacturer's
21 recommendation.
22 CHAIRMAN STETKAR: Manufacturer's
23 recommendation. So you can -- you have assurance that
24 if you can get it back in 10 minutes you are okay.
25 You just don't necessarily know what the margin is to

1 -- you know, at 10 minutes and 30 seconds, do things
2 get really bad, or is that just a manufacturer being
3 very --
4 MR. CURRY: At this point, that was --
5 CHAIRMAN STETKAR: -- conservative.
6 MR. CURRY: -- that was what we used to
7 set the 10 minutes.
8 CHAIRMAN STETKAR: Thanks. That at least
9 helps, and to know that it's the bearing helps. I
10 don't know what to do with it, but it helps. And I
11 think you mentioned there is still an open RAI out
12 through Chapter 8 or something like that about the
13 basis for survivability of the pumps under loss of
14 cooling. Is that right, Paul? Right, yeah.
15 MR. CURRY: All right. I think there was
16 a question also in 9.2.2 about component cooling
17 water, and do we have a problem. And, actually, I
18 think this was a question to staff, so just very
19 briefly, you know, we do not have a problem with pump
20 runout if we open one train versus another train. You
21 know, one pump of a CCW train provides cooling to both
22 trains.
23 CHAIRMAN STETKAR: Right, right.
24 MR. CURRY: 9.2.6, there was a question
25 about the dyke around the demineralized water storage

1 tank. Answer is no.

2 CHAIRMAN STETKAR: Okay.

3 MR. CURRY: No dyke.

4 9.2.7, there was a question --

5 CHAIRMAN STETKAR: If you -- hold on just

6 a second. I'm a slow writer, and I'm still back

7 jotting down notes on the reactor coolant pumps.

8 (Pause.)

9 We eventually get the transcripts, but I

10 hate going through those.

11 Let's see, no dyke.

12 Okay. I'm caught up, thanks.

13 MR. CURRY: Okay. The dyke question,

14 9.2.6, no dyke around the demineralized water storage

15 tank.

16 CHAIRMAN STETKAR: Okay.

17 MR. CURRY: 9.2.7, Question G, the

18 Committee was surprised that the electric pump, EFW

19 pump heat load was higher than the turbine-driven pump

20 heat load. The answer to that is the calculation for

21 the electric pump was simply based on an efficiency-

22 type calculation. So if the pump was 80 percent

23 efficient, we assumed 20 percent went into the room

24 and was a heat load to the room.

25 For the turbine-driven EFW pump, that is

1 not the way the analysis took credit for installation
2 of the pump and supporting exhaust piping. So that is
3 why that heat load was not so significant.
4 CHAIRMAN STETKAR: Okay. So it is
5 basically a different -- difference in the analysis.
6 MR. CURRY: Just in the analysis. All of
7 the energy, all of the waste heat from the electric
8 pump, was assumed to heat up the room.
9 CHAIRMAN STETKAR: Yes.
10 MR. CURRY: Not the case for the turbine-
11 driven pump. You know, it is contained, goes back
12 into the water, for example.
13 CHAIRMAN STETKAR: Okay. At least that
14 is an explanation for the different -- I mean, you
15 know, you are using it to size the ECWS capacity, and
16 it is pretty conservative, you know, for the motor-
17 driven. It explains the difference. Thanks.
18 MR. CURRY: 9.2.7 --
19 CHAIRMAN STETKAR: Hold on a second. As
20 I said, I'm a really slow writer.
21 (Pause.)
22 MR. CURRY: And apparently, you know, the
23 staff also asked the same question during an audit,
24 so --
25 CHAIRMAN STETKAR: Oh, okay. We don't

1 get the RAIs. We don't even hear about the audits.
2 MR. CURRY: Okay.
3 CHAIRMAN STETKAR: Okay. Thanks, Jim.
4 I'm caught up.
5 MR. CURRY: Related to that, there was a
6 question about turbine-driven EFW pump and whether
7 steam leakage was considered. And, you know, based on
8 Japanese experience -- and also the question was
9 Japanese experience, whether steam leaks were common,
10 the answer to that is no. And steam leakage wasn't
11 considered in the turbine-driven EFW pump room
12 calculation, heatup calculation. The view is that
13 such leakage would be minor and is encompassed by the
14 margin.
15 CHAIRMAN STETKAR: Okay.
16 MR. CURRY: Also, in 9.2.7, there was a
17 question about double-lock closed isolation valves on
18 the line from the CCW to the fan coolers.
19 CHAIRMAN STETKAR: Yes.
20 MR. CURRY: And the short answer to that
21 is there is only one locked closed valve on each line.
22 It is not a double-lock closed valve, so it meets the
23 requirement.
24 CHAIRMAN STETKAR: Yes. I was going to
25 say those two single -- they are called lock closed,

1 you know, motor-operated valves, which I'm assuming
2 means that the motor is deenergized. Those are the
3 two valves, one on the inlet and one on --
4 MR. CURRY: That's correct.
5 CHAIRMAN STETKAR: -- on the return.
6 MR. CURRY: Correct.
7 CHAIRMAN STETKAR: Okay. Okay. Thank
8 you.
9 MR. CURRY: And then there is a question
10 in 9.3.3, this is the one I misspoke on earlier about
11 the floor drains in the ESF room. And you kind of
12 questioned, well, why did we close -- why did we have
13 normally closed valves versus open? And Mr. Nishio
14 gave you the answer that --
15 CHAIRMAN STETKAR: I understand the
16 concern about not coupling -- I think you characterize
17 them as the east and the west sides, you know, through
18 the common drain system. I understand that concern.
19 MR. CURRY: And I think you asked a
20 question about balance. Well, gee, how did you -- did
21 you overweight one issue or --
22 CHAIRMAN STETKAR: Right.
23 MR. CURRY: -- another? And we reviewed
24 that. You questioned, well, could check valves have
25 done the job? Again, it is a safety-related function.

1 The desire was to have valves that you could monitor.
2 There is a sump in those rooms that has level
3 indication. So if you had a leak -- that level
4 indication that's in the control room, so if you had a
5 leak, the operator could take action to open the drain
6 valves if necessary.
7 So with the balance of the safety concern
8 about keeping those -- the east and west sides
9 separated, and the monitoring of potential leakage,
10 which would allow for operator action to open the
11 drain valves, the decision was to keep those valves
12 normally closed.
13 CHAIRMAN STETKAR: And you said each room
14 does have a sump with a level --
15 MR. CURRY: Yes.
16 CHAIRMAN STETKAR: -- level indication or
17 a level alarm.
18 MR. CURRY: Yes, sir.
19 (Pause.)
20 CHAIRMAN STETKAR: Okay.
21 MR. CURRY: And then that brings us up to
22 9.5.1, the fire protection. You had a question about,
23 really, the convergence of the four trains. And Mr.
24 Ron Reynolds is back. He can explain that issue.
25 MR. REYNOLDS: Okay. Well, good morning.

1 Yes. We looked at the convergence of all four trains
2 to the control room. That is the question. And the
3 question is, do we have physical separation as all
4 four trains enter into the control room?
5 And what we found is, yes, we do have
6 that. As of yesterday, I thought we may have had a
7 chance of some fire wrap being needed, which is
8 certainly not an issue. But we had to go through the
9 cable routing to determine that in fact we have the
10 separation.
11 So I would ask the ACRS Committee to look
12 at DCD Figures 9.A-3 and 9.A-5. Now, those figures
13 are layouts --
14 CHAIRMAN STETKAR: Yes.
15 MR. REYNOLDS: -- and they are SRI.
16 CHAIRMAN STETKAR: Right.
17 MR. REYNOLDS: And so if we needed to go
18 into more detail and description of how that happens,
19 I would certainly be glad to give that. We probably
20 need to do that --
21 CHAIRMAN STETKAR: We would have to close
22 the meeting.
23 MR. REYNOLDS: That's correct, sir.
24 CHAIRMAN STETKAR: Let me ask, Ron,
25 before we decide -- let me ask the other members. Do

1 we want to look -- I see people searching on their
2 computers, so they are probably looking at the
3 figures. I looked at those figures yesterday. Are
4 those figures -- you know, they're at specific
5 elevations.
6 MR. REYNOLDS: Correct.
7 CHAIRMAN STETKAR: Is there any
8 intermediate volume in an elevation between those two
9 horizontal slices? In other words, the one thing -- I
10 can't figure the figure number -- the one figure
11 number shows distinct compartments with walls around
12 them. The other figure shows simply the footprint of
13 the main control room. Do the walls that are shown on
14 the lower figure extend -- and tell me when I get into
15 too sensitive things here -- extend all the way up to
16 the main control room?
17 MR. REYNOLDS: Right. Simply -- I think
18 your understanding is correct. It is an extension.
19 CHAIRMAN STETKAR: It does.
20 MR. REYNOLDS: As you look -- Figure 9.A-
21 3 and 9.A-5, there is a 9.A-4 that has that
22 intermediate level. And the rooms in discussion here
23 are a continuation.
24 CHAIRMAN STETKAR: Are a continuation.
25 Okay, great. Thank you. And 9.A-4 -- I probably

1 missed 9.A-4.

2 MR. REYNOLDS: Well, that's not one that

3 I was asking about. 9.A-4 is an intermediate

4 interval.

5 CHAIRMAN STETKAR: Okay.

6 MR. REYNOLDS: But in most cases you will

7 find just the footprint with an X through it, which

8 represents that that wall would --

9 CHAIRMAN STETKAR: Oh, okay.

10 MR. REYNOLDS: -- or room would continue

11 up to the next level.

12 CHAIRMAN STETKAR: Thank you. I'm not

13 going to ask how you get -- so all of -- essentially

14 they remain separated by division until they get to

15 the main control room. And then, in the main control

16 room --

17 MR. REYNOLDS: That's correct.

18 CHAIRMAN STETKAR: -- whether it's the

19 sub-floor area in the main control room that you do

20 all of the cross-talk there --

21 MR. REYNOLDS: That is correct.

22 CHAIRMAN STETKAR: Okay. Okay, good. I

23 mean, that's good. Good. Thank you.

24 MR. REYNOLDS: You're welcome.

25 MR. CURRY: So, Mr. Chairman, that is the

1 list of questions we have that we took yesterday. And
2 so from our understanding at this point, we -- I have
3 one action item that we talked about, which was the
4 weir wall calculation.
5 CHAIRMAN STETKAR: Yes, the weir wall
6 heatup.
7 MR. CURRY: So at this point that's where
8 we think we are with regard to the Committee.
9 CHAIRMAN STETKAR: Well, you have a much
10 better perspective than I do, because I have piles of
11 notes and things here. What we will do is, after
12 these meetings we always go back and go through the
13 transcripts and go through our notes.
14 And if there are any remaining questions
15 that we have, what we have typically done in the past
16 is we will highlight them and make sure that they get
17 to you probably through the staff. I think that is
18 the way we have been doing it, right, Ilka? You know,
19 in a sense of completeness.
20 I certainly appreciate you -- you
21 obviously, as you said, either late night or early
22 morning or really late night, I really appreciate all
23 of the effort that you have put in. MHI has --
24 continues to be very, very responsive to these things.
25 And we certainly -- we really appreciate this. It

1 helps us. It keeps the process moving, and I
2 certainly thank you very much.
3 Either of the other members have any
4 further questions or points?
5 (No response.)
6 Well, thank you. I appreciate it. And
7 thank you very much.
8 MR. CURRY: We thank the Committee.
9 Thank you.
10 CHAIRMAN STETKAR: Did you want to say
11 something?
12 MS. BERRIOS: If you want to take a break
13 or you wanted to go straight with --
14 CHAIRMAN STETKAR: It depends on -- Paul,
15 how long do you think you will need?
16 MR. KALLAN: Not long.
17 MR. HAMZEHEE: Ten to 15 minutes.
18 CHAIRMAN STETKAR: If it's 15 or 20
19 minutes, why don't we just go to completion. If it
20 was going to be half an hour or 45 minutes, I would
21 take a break. But let's --
22 MR. HAMZEHEE: It's about 10 to 15
23 minutes.
24 CHAIRMAN STETKAR: Fine. Let's just
25 finish up with the staff and we can all happily

1 depart.

2 (Pause.)

3 Let me just clarify things. Bill, to get

4 it on the record -- I was kind of asking you offline,

5 but you were talking loud enough that it was picked

6 up. I had a question about -- you had a question

7 yesterday about the possible anomaly of the

8 performance of Metamic material.

9 MEMBER SHACK: In BWR and PWR

10 environments.

11 CHAIRMAN STETKAR: You know, pure water

12 versus high pH borated water. And you have looked at

13 that and thought about it and it's okay.

14 MEMBER SHACK: Right. I mean, I have

15 looked at the experience with it and it's good. I

16 have looked at a number of reports telling me that it

17 is -- it really -- you know, you do want to use -- or,

18 you know, you may want to consider using the anodized

19 version in the BWR. In a PWR, it's good.

20 Then, I was trying to figure out why that

21 would be the case, because normally one things of

22 aluminum oxide as being very stable at pH 7 and the

23 solubility goes up as you go either acid or base. And

24 we had the same anomaly actually in considering

25 GSI-191 stuff at Argonne when we made aluminum

1 precipitates and we suddenly found that it would
2 dissolve in high purity water at pH 7 and it was quite
3 stable in borated water at ph 5.
4 And that -- we finally concluded to
5 ourselves that the problem was that you can't just
6 look at solubility in terms of pH alone. There is an
7 important factor of ionic strength, and in BWRs there
8 isn't a floating -- there is not an ion to be found.
9 I mean, the conductivity that they maintain is so low
10 that it is incredible, and that is really what
11 explains the difference in performance when you look
12 at the nominal pHs and say, "It should be worse in
13 PWRs, and it just isn't."
14 And as I say, that is consistent with our
15 own lab experience with aluminum oxide for a
16 completely different situation, but still looking at
17 that solute stability and it just -- my chemists keep
18 telling me I have to keep thinking about ionic
19 strength, and I just sort of go first order to pH and
20 get it wrong every time.
21 CHAIRMAN STETKAR: Thank you. So at
22 least that -- I mean, that was kind of a lingering
23 thing. You said you were going to go look at those
24 reports. So that -- good. That's closed out.
25 Okay. Paul, it's yours.

1 MR. KALLAN: All right. So we have some
2 followup answers to the questions that were -- that
3 you asked yesterday. And we will start off with
4 9.2.5. I'll turn it over to Larry with regards to the
5 ultimate heat status.
6 MR. WHEELER: Good morning, Mr. Chairman.
7 I'm Larry Wheeler, Balance of Plant. And one of the
8 items left over from yesterday was the design basis
9 statement in 9.2.5.1, which talks about the reference
10 to Reg Guide 1.27 and 36-day cooling related to a
11 pond.
12 And I handed you a copy of Reg Guide
13 1.27. There is a discussion -- a long discussion
14 related to meteorological conditions related to 30
15 days and 36 days using a pond. So I would recommend
16 that I work with MHI and we kind of clean up the DCD,
17 not that we are going to resolve it here, but maybe
18 just refer that Reg Guide 1.27 applies and get rid of
19 the cooling pond.
20 CHAIRMAN STETKAR: I think for expedience
21 that might clarify any questions. Again, for the
22 design certification, it is a moot point, because this
23 is all COL.
24 MR. KALLAN: That's correct.
25 CHAIRMAN STETKAR: But for stability with

1 the COL, especially -- I think you mentioned yesterday
2 that Reg Guide 1.27 is in the process or review and
3 revision and update. And I did read the Reg Guide
4 last night. I am better educated than I was 24 hours
5 ago. And sometimes better education leads to improved
6 confusion. So we will just leave it that way.
7 At least you have answered my question.
8 I was asking, you know, primarily what was -- was
9 there regulatory, you know, guidance. And you pointed
10 me in the right direction, so --
11 MR. KALLAN: Okay.
12 CHAIRMAN STETKAR: Thank you.
13 MR. KALLAN: Okay.
14 MEMBER BROWN: For somebody like me who
15 is non-initiated into this nuance, this is an
16 educational question, since we have a few minutes, if
17 you don't mind. If I read your notes on 1.127 -- I'm
18 trying to differentiate between cooling ponds and
19 spray ponds. I mean, at 30 days -- if I look at 1.27
20 it kind of says 36 days -- 30-day supply of water.
21 MR. WHEELER: Right. That's my first --
22 30 days.
23 MEMBER BROWN: But then it says 36 days
24 for spray ponds.
25 MR. WHEELER: That's right.

1 MEMBER BROWN: I know if you're not
2 spraying, I mean, what is -- is meteorological
3 conditions, what --
4 MR. WHEELER: Well, I'll read to you from
5 what the reg guide says. Not that that is going to
6 help.
7 MEMBER BROWN: Probably going to have a
8 brain freeze here.
9 MR. WHEELER: This is an example under
10 the meteorological conditions paragraph. As an
11 example, consider cooling ponds as a heat sink where
12 the pond temperature may reach a maximum of five days
13 following a shutdown. So what they are saying is for
14 a pond, that maximum heat load to the pond is not
15 going to get there for five days. So that is kind of
16 my thought process of where the 36-day came from.
17 MEMBER BROWN: Okay. I remembered you
18 talking about that yesterday, this five days. In
19 other words, so initially you start off at some
20 temperature for the pond. And if you -- and then you
21 are using it under some conditions, that it takes five
22 days to reach a maximum temperature that it is allowed
23 to operate. Is that what you mean by "maximum
24 temperature," or is that a stable equilibrium
25 temperature? Or don't know?

1 MR. WHEELER: I can't --

2 MEMBER BROWN: Okay.

3 MR. WHEELER: I can't really comment on

4 what is in the reg guide.

5 MEMBER BROWN: All right. We'll --

6 CHAIRMAN STETKAR: I think, you know --

7 MR. WHEELER: If we were designing spray

8 ponds, I would probably, you know, learn a lot more

9 information before walking in here, but --

10 CHAIRMAN STETKAR: I think the preface is

11 -- the problem is, the discussion in the reg guide, in

12 my interpretation of it -- and this is only my

13 interpretation. I think any number of us in this room

14 might have slightly different interpretations. It

15 cites a couple of examples about how one might assign

16 the most conservative meteorological conditions

17 depending on a specific design of what you call the

18 sink.

19 MEMBER BROWN: That's right. And that's

20 the --

21 CHAIRMAN STETKAR: And they call it

22 the --

23 MEMBER BROWN: -- external environment,

24 like humidity, stuff like that?

25 CHAIRMAN STETKAR: That's right.

1 MEMBER BROWN: Okay.

2 CHAIRMAN STETKAR: That's meteorological,
3 and they call it the sink. One example that they use
4 is an actual draft cooling tower where you are
5 obviously evaporating -- you know, you are designed to
6 evaporate a volume. And they give an example about,
7 you know, how one might divine the most limiting dry
8 bulb temperature to use in your calculation to give
9 you assurance that you have a 30-day cooling
10 capability.

11 The other example they use -- and Larry
12 cited it -- is a cooling pond. It doesn't say spray.
13 It doesn't say cement pond. It doesn't say -- you
14 know, it says pond, and it says, you know, in my
15 interpretation you could use a five-day heatup time,
16 plus an additional day for, you know, extreme
17 meteorological conditions, and then 30 days.

18 But ultimately, the bottom line, the
19 regulatory position consistently cites the fact that
20 you need to demonstrate a 30-day cooling capability --

21 MR. WHEELER: Correct.

22 CHAIRMAN STETKAR: -- under limiting
23 meteorological conditions.

24 MR. WHEELER: That's right.

25 CHAIRMAN STETKAR: And I think how you

1 develop those meteorological conditions for your site-
2 specific configuration of whatever you call the sink,
3 you know, probably a needs a bit better elaboration in
4 an update to the reg guide.
5 MEMBER BROWN: Okay. I quit.
6 CHAIRMAN STETKAR: But I know where the
7 36 came from.
8 MR. WHEELER: I am on the committee to
9 revise that reg guide, so I will take that note back
10 and --
11 CHAIRMAN STETKAR: What is your schedule
12 for it, just out of -- do you have one?
13 MR. WHEELER: It has been ongoing for two
14 years. I don't know when we are supposed to present
15 it.
16 CHAIRMAN STETKAR: Fine. We'll see it,
17 you know, once --
18 MR. HAMZEHEE: John, if you are
19 interested, we have a schedule for all the reg guide
20 updates --
21 CHAIRMAN STETKAR: Yes.
22 MR. HAMZEHEE: -- SRPs. We can
23 communicate that to you when you are available.
24 CHAIRMAN STETKAR: They always come to us
25 before they are issued for comments, and then we make

a decision whether we want to look at them at that time. They come back after public comments are resolved, and more frequently we look at them, you know, at that time. So we are plugged into that process.

MR. WHEELER: If we could move on, we will discuss 9.2.2. What I threw up here is just the Tier 1 figure. This shows the overall configuration of the Alpha and Bravo CCWS loops.

If you go to the next slide, I wanted to blow this section up, so we can talk about the cross-ties between in this case Alpha and Bravo.

The cross-tie discussion was an RAI 4365, Question 9.2.2-58. And in that response, which was related to the thermal barrier isolating and what to do with that scenario, this was MHI's response to allowing the Alpha/Bravo in this case to essentially not be isolated, to have the MOVs, the 7s, and the 20s open.

And in that response, they assumed on an ECCS signal the CCWS pump does not start. Therefore, the 145 valves do not open.

Now, by the way, the 145 valves, which you see on the discharge of the Alpha CS RHR heat exchangers, those are normally closed. And those 145s

1 ought to open on an ECCS, plus a CCWS pump start. So
2 an ECCS start by itself are not going to open.
3 CHAIRMAN STETKAR: It doesn't open those.
4 You have to have the interlock with the pump start.
5 MR. WHEELER: You have to have the
6 permissive from the pump being open, and the ECCS, and
7 then that 145 valve goes open.
8 Now, 145 MOV takes about 120 seconds to
9 open.
10 Now, a little bit more details about the
11 flow paths, that if the Alpha train doesn't start, the
12 B pump is now going to pick up the loads going to the
13 opposite train. The flow through this ECW pump for
14 this cooler is about 40 gpm. It's a small line about
15 an inch and a half.
16 For the SI pump, it's 180 gallons per
17 minute. It's about a three-inch diameter. And
18 containment spray pump, that is 80 gpm, and that's a
19 two-inch diameter pipe. So we are talking relatively
20 small flows compared to the overall -- I think it's
21 12,000 gpm flow rate.
22 CHAIRMAN STETKAR: As long as the 145
23 valve is closed.
24 MR. WHEELER: That's my next --
25 CHAIRMAN STETKAR: Okay.

1 MR. WHEELER: -- my next point. The RAI
2 response was limited to only looking at that scenario.
3 It didn't really look at other events, and I kind of
4 touched upon that yesterday, that if you actually get
5 the ECCS or the station blackout, both Bravo trains
6 come up, pump starts, the 145 goes open, 120 seconds
7 later that valve is now full open, and 121 seconds
8 into the event you lost your pump, your gas turbine,
9 your electrical bus. Now you are going to get
10 yourself into concern, because now you are picking up
11 4,400 gpm to that 14-inch line.
12 CHAIRMAN STETKAR: And the associated
13 heat load, if we are talking about a LOCA.
14 MR. WHEELER: Exactly. So to back up,
15 the RAI response was limited. The analysis needs to
16 -- we need to look at that a little further to
17 evaluate a maybe more limited scenario that now looks
18 at that 145 valve being open. And the 24 hours to
19 close that isolation between trains would not be
20 acceptable.
21 CHAIRMAN STETKAR: Thank you. This, by
22 the way, points out, you know, the design basis
23 analysis. You have to assume a single failure.
24 Assuming a single failure at time T-zero --
25 MR. WHEELER: That's right.

1 CHAIRMAN STETKAR: -- in this case is not
2 necessarily the most conservative single failure. And
3 that is -- thank you. This helps a lot.
4 MR. WHEELER: And I did point out
5 yesterday, thinking that that 145 valve didn't open,
6 and that is why it didn't open, because --
7 CHAIRMAN STETKAR: Because it was at T-
8 zero.
9 MR. WHEELER: Right, yeah.
10 CHAIRMAN STETKAR: I mean, it was -- you
11 know, the simultaneous, whatever, loss of offsite
12 power with the limiting single failure presumed to be
13 the GTG would get you that at T-zero.
14 MR. WHEELER: So the staff has an audit
15 coming up with MHI next month, so I am sure we will
16 have a little bit more discussion on this one.
17 CHAIRMAN STETKAR: Thank you.
18 MR. WHEELER: Moving on to the next
19 slide, your references yesterday related to where the
20 24-hour duration for operator action, and I pulled the
21 insert from the SECY-77-439.
22 CHAIRMAN STETKAR: Okay.
23 MR. WHEELER: And I bolded the section
24 that MHI referenced in their RAI response saying that
25 there is sort of a definition of establishing long-

1 term cooling and that is the 24-hour period of time,
2 and then they use that for kind of a signal for
3 success for the operators to get them -- the valves
4 closed, so that you can get off into long-term
5 cooling.
6 And, once again, we will have to go back
7 and revisit this now that there is kind of a more
8 limited scenario that we need to evaluate.
9 CHAIRMAN STETKAR: But this is at least
10 --and thanks for dredging this up. I didn't have the
11 opportunity last night to find this one.
12 MR. WHEELER: And I have a copy of the
13 SECY I can leave with you if --
14 CHAIRMAN STETKAR: Yes, I'd appreciate
15 that, or, you know, give it to Ilka, so -- make sure
16 that we get it distributed to everybody on the
17 Subcommittee.
18 MR. WHEELER: Any other questions for
19 ESW, component cooling, ultimate heat sink? Those are
20 the ones that I --
21 CHAIRMAN STETKAR: Again, if you would
22 bear with me for a couple of minutes, because I am a
23 slow writer. I just want to make sure I make a couple
24 of notes here.
25 (Pause.)

1 Okay. I apologize. I am a slow writer.
2 But as I age, my retention is about 15 minutes. So if
3 I don't make notes, I will forget it by the time I hit
4 the door over there.
5 MR. KALLAN: Okay.
6 CHAIRMAN STETKAR: Thanks, Paul.
7 MR. KALLAN: There was a question on
8 9.1.3.1 with regards to the inconsistency in the
9 temperature with regards to the DCD and the SER, and I
10 wanted to turn it over to Raul Hernandez.
11 MR. HERNANDEZ: Yes. The description in
12 that section of our FSAR is addressing the design
13 criteria for the spent fuel pool cooling system, and
14 it found, yes, there was an inconsistency.
15 The system is designed to maintain less
16 than -- to maintain the water in the spent fuel pool
17 less than 120 with both trains running. So I will
18 need to correct this statement here that with a single
19 active failure the temperature will not reach higher
20 than 140.
21 CHAIRMAN STETKAR: With a half core.
22 MR. HERNANDEZ: Yes.
23 CHAIRMAN STETKAR: I'm sorry. Any single
24 act of failure regardless -- half core, full core.
25 MR. HERNANDEZ: Well, you know, his first

1 thing when he started looking at the half core, yes,
2 the single act of failure applies to either one of
3 them.
4 CHAIRMAN STETKAR: Right, right.
5 MR. HERNANDEZ: And it would be --
6 CHAIRMAN STETKAR: And the operative is
7 140 under that. Okay. Thanks. Thanks.
8 MR. HERNANDEZ: That statement was taken
9 from the DCD.
10 CHAIRMAN STETKAR: I actually had to
11 craft myself -- looking at all of the words in the DCD
12 and the SER, I had to put together a little table with
13 half core, full core, spent fuel, pit cooling trains,
14 RHR, CS trains, and try to divine all of the things.
15 That was the inconsistency, so --
16 MR. HERNANDEZ: Yeah. The inconsistency
17 was the statement of the single act of failure.
18 CHAIRMAN STETKAR: Right.
19 MR. HERNANDEZ: The system is designed
20 for 120, with both trains on it.
21 CHAIRMAN STETKAR: With both trains, 140
22 with a single act of failure.
23 MR. HERNANDEZ: Yes.
24 CHAIRMAN STETKAR: Yes. As I said, it
25 wasn't -- I just wanted to make sure I understood that

1 the table I put together was right, that I wasn't
2 missing something. It is not a concern about the
3 design of the system or, you know, any safety concern
4 essentially. So thank you.
5 MR. HERNANDEZ: Yes. And in answering
6 one of the other comments from the members about the
7 heat load at that particular scenario, the DCD
8 specifies that that is with a full pool and all of the
9 locations are full. So it is a -- the limiting heat
10 load at that moment.
11 There was also a comment on -- oh, let me
12 wait until you finish.
13 (Pause.)
14 Another comment that you had on
15 Section 9.1.3 was dealing with the particular RAI that
16 I submitted about the shutdown of the spent fuel pool
17 cooling pumps and the restart of the pumps. You were
18 asking if -- why we didn't ask for a COL action for
19 that particular procedure.
20 The determination when we need a COL
21 action item basically comes down to staff -- to our
22 consideration. You know, when we look at it, it is --
23 those actions are different from what we normally see,
24 normal operations.
25 In this particular case, the actions

1 required are pretty straightforward -- you know,
2 initiating a pump, checking levels. It is not asking
3 for the operator to go outside of the containment --
4 outside of the control room to physically go to a
5 specific location.
6 It is -- they are monitoring the
7 temperature of the spent fuel pool, and when the
8 temperature goes high they would have to take actions.
9 And the actions are not something that they normally
10 wouldn't do -- you know, check temperature, check
11 level, and restart pumps. That's why I did not
12 require a COL action item for this particular.
13 CHAIRMAN STETKAR: Okay. And that is --
14 looking for the thought process, and you have
15 explained that. I mean, I think it is reasonable to
16 presume that the COL applicant will look at the design
17 of the plant and write, you know, procedural guidance
18 consistent with that design. And you have pretty well
19 explained sort of the thought process that the staff
20 goes through about, you know, any need to specifically
21 highlight things or not. So I think that makes sense.
22 MR. HERNANDEZ: When we talking about,
23 you know, going outside of where the operators are
24 normally located, or having to move to a specific
25 location to take certain actions, that -- it is more

1 demanding, and it's not going to be so
2 straightforward, so simple as just when you are inside
3 a control room and typical monitoring of the
4 situations of the plant conditions.
5 CHAIRMAN STETKAR: All right.
6 MR. HERNANDEZ: Have any other questions
7 on the spent fuel pool, spent fuel pool cooling?
8 CHAIRMAN STETKAR: I don't recall any.
9 But as I said, I think that, yeah, we pulled together
10 everything at the conclusion of the meeting. If there
11 is anything that we missed in today's discussions, we
12 will summarize it and make sure we get it to you.
13 MR. HERNANDEZ: You also had a comment on
14 Section 9.1.4 where we are talking about draindown of
15 the refueling cavity.
16 CHAIRMAN STETKAR: Yes.
17 MR. HERNANDEZ: There was a statement in
18 the staff evaluation that their makeup capability is
19 higher than the draindown. That statement came out of
20 the responses to the staff's RAI. The staff sent two
21 different RAIs dealing with draindown path from the
22 refueling cavity. We specifically asked them to look
23 into all of the connecting systems and look for
24 possible draindown path.
25 The applicant went through in one of the

1 responses and enumerated all of the different -- well,
2 tabulated -- they put a table together with all of the
3 different possible draindown paths and what would be
4 the worst possible case. It was determined that the
5 worst possible case was the drain for the reactor
6 cavity area. And there makeup capability from the
7 refueling water storage tank was higher than the
8 maximum expected draindown path.
9 So I guess that we could rephrase the
10 statement in the FSAR to point out exactly that we are
11 referencing the expected draindown or the evaluated
12 draindown, not --
13 CHAIRMAN STETKAR: I think that would
14 help a lot, because the connotation of "any" is --
15 MR. HERNANDEZ: It was "any" from the
16 evaluation.
17 CHAIRMAN STETKAR: -- is pretty large.
18 By the way, do you have a reference for that
19 particular RAI response?
20 MR. HERNANDEZ: Yes.
21 CHAIRMAN STETKAR: So that we can --
22 MR. HERNANDEZ: I have two RAIs. The
23 original RAI was RAI 507-3393.
24 CHAIRMAN STETKAR: 507-3393.
25 MR. HERNANDEZ: Yes.

1 CHAIRMAN STETKAR: Okay.

2 MR. HERNANDEZ: Question 9.1.4-16.

3 CHAIRMAN STETKAR: 9.1.4-16. Okay.

4 MR. HERNANDEZ: And then subsequent RAI

5 was RAI 633-4857.

6 CHAIRMAN STETKAR: 4857.

7 MR. HERNANDEZ: Question 9.1.4-21.

8 CHAIRMAN STETKAR: 9.1.4-21. Okay.

9 MR. HERNANDEZ: This is the response that

10 has the table.

11 CHAIRMAN STETKAR: And the second one has

12 the table?

13 MR. HERNANDEZ: Yes, the second one.

14 CHAIRMAN STETKAR: Okay. Could you make

15 sure -- just get that to Ilka, so that we can take a

16 look at it.

17 MR. HAMZEHEE: You should have it.

18 CHAIRMAN STETKAR: Okay. Yes, I'm --

19 MR. HERNANDEZ: This is with the RAIs

20 dealing with refueling cavity seal, and we looked more

21 than just the cavity seals and the other seals in that

22 area. We also looked at other draindown paths.

23 The FSAR -- we will revise it to be --

24 specifically highlight that this is not a general

25 statement for any leakages, just the ones that we

evaluated.

CHAIRMAN STETKAR: That would help to clarify I think. And it's good -- and I think it's really good to have that background document. It essentially does what I was asking. You know, I was challenging this notion of, how can you say "any"? But it does say that, as a response to an RAI, there was a consistent evaluation done, which essentially is what I was driving at, you know, through the questions. So that's good.

Ryan?

MR. SPRENGEL: This is Ryan Sprengel. Just a clarification. We are talking about the SER.

MR. HERNANDEZ: Yes.

MR. SPRENGEL: Correct? Not the FSAR. Okay. Okay.

MR. HERNANDEZ: Well, yes.

MR. SPRENGEL: I just wanted to clarify.

CHAIRMAN STETKAR: Thanks for clarifying it.

MR. SPRENGEL: So the changes to the SER, without open items in the future, and then finally the FSER. That's my understanding.

CHAIRMAN STETKAR: Yes, thank you. Thanks for the clarification. That's important for

1 the record.

2 Paul?

3 MR. KALLAN: There was a question on

4 9.1.5 with regards to heavy load crane. And it was

5 Section 9.1.5.4 with regards to what are the SSC

6 important to safety, and is it equivalent to safety,

7 important to safety. And I don't think at this point

8 -- I mean, we --

9 MS. McKENNA: This is Eileen McKenna. We

10 are not prepared to respond to that at this time. I

11 do actually have a followup, though, for the question

12 about the chilled water system and why it is not in

13 the tech specs.

14 I think the SER didn't really explain why

15 it was not in the standard tech specs and just said

16 that because it's not in the standard it's not in this

17 application. But the basis is that the essential

18 chilled water system is a support system to the rooms

19 -- to the systems that are in rooms that it services.

20 And the way it is handled through the tech specs is

21 through the definition of operability for those

22 systems.

23 In particular, if I may quote from the

24 definition of "operability," a system, subsystem,

25 train, component, or device shall be operable, or have

1 operability, when it is capable of performing its
2 specified safety functions and when all necessary
3 attendant instrumentation controls, normal or
4 emergency electric power, cooling and seal water,
5 lubrication, and other auxiliary equipment that are
6 required for the system, subsystem, train, component,
7 or device to perform its functions are also capable of
8 performing their required support functions.
9 So as a specific example, if the chillers
10 are out of service in the space where, say, the
11 turbine-driven emergency feedwater pump is located, it
12 would be the responsibility of the operators to
13 evaluate whether, given whatever that condition of the
14 cooling for that space, whether that pump remains
15 operable. And if they determine it is not operable,
16 they would follow the limiting condition for operation
17 and the actions associated with the pump.
18 CHAIRMAN STETKAR: Okay. I understand
19 all of that, and I will ask you why, then, do we have
20 technical specifications on ac electric power, dc
21 electric power, gas turbine generators, diesel
22 generators, essential service water systems, component
23 cooling water systems? And I probably missed a few,
24 which are all support systems which would in principle
25 be covered under those statements that you just made.

1 Why do we have tech specs that are very explicit on
2 all of those other things?
3 MS. McKENNA: The basis for when we have
4 LCOs or criteria that are written into 50.36, and one
5 of them that probably captures most of the things you
6 are talking about is Criteria 3.
7 CHAIRMAN STETKAR: I mean -- I'm asking,
8 if I go to tech specs today, the standard tech specs,
9 there are LCOs for everything that I mentioned.
10 MS. McKENNA: Yes.
11 CHAIRMAN STETKAR: There is none for
12 ECWS, simply because the people who drafted the
13 generic tech specs thought about currently operating
14 plants that don't have an essential chilled water
15 system. Otherwise, they would have put one in there.
16 That's the fact of the matter.
17 And if you draw the analogy that I don't
18 need one for essential chilled water, then I don't
19 need one for essential service water. I don't need
20 one for component cooling water. I don't need one for
21 ac power. I don't need one for dc power. Because it
22 all relies on the fact that I need support for this
23 pump that pumps water.
24 And the tech specs are not organized that
25 way in the generic tech specs. They do have LCOs that

1 call out surveillance requirements and allowed outage
2 times for all of those other support systems that I
3 listed.
4 The only exception in this particular
5 design is essential chilled water, because I believe
6 that the people who crafted the tech specs weren't
7 familiar with designs that happened to have essential
8 chilled water systems, which is not a traditional U.S.
9 plant design feature. It is more traditional for
10 other plants.
11 MS. McKENNA: True. But I think the
12 point to be made is that something like a room
13 ventilation, you may or may not need it for the
14 equipment to be operable, whereas you clearly have to
15 have electric power, and you clearly -- you know, so
16 that there are situations where you could have the
17 essential chilled water system degraded, you know,
18 less than full complement, and the equipment that it
19 services is still operable.
20 CHAIRMAN STETKAR: You know, I think it's
21 a stretch because in specific -- in the US-APWR
22 technical specifications, the bases for the ultimate
23 heat sink and the essential service water system
24 specifically referenced the fact that those are
25 cooling supplies for the chillers. You know, I just

1 don't --

2 MEMBER SHACK: Without offending your

3 consistency and logic, is there a safety problem

4 associated with this?

5 CHAIRMAN STETKAR: I think there might

6 be. I think there might be in an operational sense,

7 because the technical specifications are what the

8 operators use day to day to give themselves assurance

9 that they understand the plant configuration and any

10 decreased margins.

11 And although it is nice to say that they

12 should look at this pump and fully understand all of

13 the subtleties of all of the support systems for this

14 pump that might affect its operability, they have to

15 do that.

16 But without the reminder in the technical

17 specifications that, for example, train A of essential

18 chilled water goes out and affects this pump and many

19 other pumps, and room ventilation for electrical

20 things, it is really, really difficult for operators

21 to make those connections. Or it can be.

22 Having been in a plant trying to make

23 several of those subtle connections where the tech

24 specs weren't all that clear, it is not very easy to

25 do. And I think without it having, you know, its

1 specific identification in the tech specs, you are
2 asking for people to perhaps, you know, overlook
3 something.
4 So it's not just a consistency issue,
5 because, I grant you, ultimately I need to understand
6 that every support system for this particular pump is
7 available. And indeed, in principle, I should look at
8 essential chilled water as part of that support.
9 But it just -- I just don't understand
10 that inconsistency, given the fact that every other
11 support system -- I could make the same argument if
12 they didn't put the dc power system in there. Right?
13 Philosophical argument.
14 MEMBER SHACK: Well, except that Eileen
15 sort of has an exception that, you know, might -- you
16 know, really, we go through every system and find out
17 whether it does it. But I think I would agree with
18 her that it seems to cover a lot of them.
19 CHAIRMAN STETKAR: It covers
20 philosophically.
21 MEMBER SHACK: Yes.
22 CHAIRMAN STETKAR: Philosophically, it
23 covers everything.
24 MEMBER SHACK: No. The distinction
25 between support systems that are in and support

1 systems that are out.

2 CHAIRMAN STETKAR: We can talk about this

3 later. I personally feel that -- again, this is a

4 Subcommittee meeting. I don't speak for the

5 Committee. I feel pretty strongly about this one,

6 especially having been an operator. And I -- anyway,

7 we will just leave it that way. And thanks for your

8 clarification.

9 MS. McKENNA: We understand your concern.

10 CHAIRMAN STETKAR: I appreciate that.

11 MS. McKENNA: Consistent with our current

12 guidance and interpretation of 50.36, they would not

13 be required to be in the specs.

14 MR. HAMZEHEE: Directly.

15 MS. McKENNA: Directly. Correct, yes.

16 Indirectly, the LCOs.

17 MR. HAMZEHEE: I think, John, there are

18 some operating plants that do have safety chilled

19 water, but not many. So --

20 CHAIRMAN STETKAR: Yeah. I don't

21 actually know that --

22 MR. HAMZEHEE: There are a few.

23 CHAIRMAN STETKAR: Okay. I didn't know

24 all of -- I know most of them don't. I'm much more

25 familiar with newer plant designs that tend to have it

1 because they need extra cooling.

2 Do you happen -- no, that's okay. It's

3 not relevant to the -- I wasn't going to ask you for

4 the plants. I was going to ask you whether you happen

5 to know whether their tech specs include the chilled

6 water systems.

7 MR. HAMZEHEE: That I can't recall.

8 CHAIRMAN STETKAR: And it's actually not

9 germane necessarily to the current -- you know, the

10 current issue. So it would be interesting, but not

11 directly relevant.

12 MR. WHEELER: Excuse me, John. I was an

13 STA at Perry and they had safety-related chillers.

14 I'll go back and look at their FSAR and tech specs and

15 see --

16 CHAIRMAN STETKAR: Did you have a safety-

17 related chilled -- you had a safety-related chilled

18 water system with chillers.

19 MR. WHEELER: Correct.

20 CHAIRMAN STETKAR: Okay, good. Good.

21 MR. WHEELER: I will take a look at

22 Perry's tech specs.

23 CHAIRMAN STETKAR: Because I'm familiar

24 with overseas plants that I have worked on, and they

25 are -- that had chilled water systems, and there are

1 -- but they're foreign countries, so they're not
2 relevant to this discussion.
3 But I understand -- you know, I
4 understand the philosophy. I understand the
5 rationale. And, thanks, that helped clarify that
6 issue. I didn't say I agreed with it; I just
7 understand it now.
8 (Laughter.)
9 Okay. Any other things, Paul?
10 MR. KALLAN: No. I think staff has
11 answered all of your questions. And we have one
12 takeaway -- the SSC important to safety.
13 CHAIRMAN STETKAR: Yes.
14 MR. KALLAN: That's it.
15 CHAIRMAN STETKAR: And that's something
16 that I -- just to put that in perspective kind, I
17 raised it yesterday for two reasons. One reason is
18 that just recently -- and I can't recall the context,
19 because we see so many things, but -- and when I say
20 "recently" I mean in the last two or three months or
21 so, because that is about all the memory that I have.
22 There was a discussion in some
23 interaction that we had --
24 MEMBER SHACK: It was in the risk metric
25 stuff.

1 CHAIRMAN STETKAR: Was it the risk metric
2 stuff?
3 MEMBER SHACK:It was the risk metric
4 stuff.
5 CHAIRMAN STETKAR: Well, was it? I don't
6 think it was in that. There was a discussion about
7 the sense that there is a set -- and this was raised
8 by the staff, that there is a set of equipment,
9 structures that are important to safety, and that
10 safety-related is a subset of that larger set. I
11 think it -- it fits into the 50.69, but I don't know
12 whether it came up under the 50.69. But it --
13 MEMBER SHACK: It came up because there
14 is a number of those risk-informed things that --
15 CHAIRMAN STETKAR: But, I mean, that is
16 more clear. This was in a different context.
17 MR. HAMZEHEE: John, yesterday you were
18 correct. I am almost positive the important to safety
19 is part of the reliability assurance program. And
20 they have to define all of the -- either the safety-
21 related, non-safety-related.
22 MEMBER SHACK: If you look in the GDCs,
23 which pre-date the reliability assurance program by
24 decades, important to safety is there. Now, what did
25 it mean -- you know, what did they have in mind at

1 that time?

2 MR. HAMZEHEE: Right.

3 MEMBER SHACK: It is certainly different

4 than the D-RAP.

5 MR. HAMZEHEE: Right, correct. And there

6 was some loose definition and very -- not very well

7 disciplined use of the terminology, because you have

8 risk significant, safety significant, important to

9 safety, has nothing to do with safety-related.

10 Safety-related is --

11 MEMBER SHACK: That's true. That's well

12 defined.

13 MR. HAMZEHEE: Yes. And I think John --

14 that's why he was trying to figure out --

15 CHAIRMAN STETKAR: A couple of things,

16 and finish the -- one reason I raised it is that I was

17 recalling -- and I don't remember the context -- an

18 issue raised by the staff about the fact that there is

19 important to safety, and that safety-related is a

20 subset of that. So understanding what important to

21 safety is has some relevance to issues raised by the

22 staff.

23 Furthermore, in this particular -- the

24 quote that I cited, there was an even further

25 distinction because there was important to safety

1 versus safe shutdown, which is even a further
2 refinement of the notion of safety-related, because
3 traditionally safe shutdown, for example, in fire
4 analysis or flooding or those types of things is a --
5 or seismic is a specifically defined set of equipment
6 that you rely on to achieve and maintain safe
7 shutdown. So it is even more finely defined than even
8 safety-related.
9 So you are now comparing some definition
10 of important to safety versus protection of safe
11 shutdown. And this was in the context of the heavy
12 load drops.
13 And I agree, I think that -- I think at
14 least for the new plants, in my mind, the better
15 guidance for determining, in an active plant design --
16 if you want to call it that -- like US-APWR, the
17 complement of equipment that is in the design
18 reliability assurance program, there is at least
19 guidance and some measure of consistency about
20 determining what is in that set of equipment.
21 And I think it is reasonable to say that
22 those determinations are consistent with the notion of
23 important to safety, and that for the passive plants
24 the analogy would be the RTNSS list.
25 So I think that in the new plant design

1 we are at least getting a bit of definition included,
2 you know, around that box of what is important to
3 safety. And that's good. The bad thing is that if,
4 indeed, there are -- in this -- the genesis of this
5 question, if there are indeed SSCs out in the turbine
6 building that are -- that fit within that box, should
7 they then be protected against heavy load drops?
8 Which brings into question, you know, the turbine
9 building crane and all that kind of thing.
10 MR. HAMZEHEE: I think we need to go back
11 and make sure what we meant by important to safety.
12 Are we talking about safety-related equipment or --
13 CHAIRMAN STETKAR: In the context of your
14 SER.
15 MR. HAMZEHEE: Exactly.
16 CHAIRMAN STETKAR: Right, right.
17 MR. HAMZEHEE: So that is really the
18 clarification the staff needs to do.
19 CHAIRMAN STETKAR: Right, right. Because
20 I excerpted the words from your SER, because you were
21 comparing important to safety versus safe shutdown.
22 Okay. So that's what we will -- to be
23 discussed.
24 Do any of the members have any more
25 questions? We usually go around the table.

1 MEMBER SHACK: It's a little short today.

2 CHAIRMAN STETKAR: It's a short table,

3 but I'll do that. Charlie?

4 MEMBER BROWN: No, I'm done.

5 CHAIRMAN STETKAR: Bill?

6 MEMBER SHACK: No.

7 CHAIRMAN STETKAR: Okay. Are there any

8 members of the public here who have any comments?

9 (No response.)

10 Didn't expect any. I don't think we have

11 a bridge line, so I don't need to ask for that.

12 Again, I appreciate everybody's

13 participation. Thank the staff for coming up with

14 answers. And I appreciate everybody coming back

15 today. I know it is a burden on some, but I think

16 that it was useful to get resolution on a large number

17 of these items.

18 Thank you, all, and with that we are

19 adjourned.

20 (Whereupon, at 10:31 a.m., the proceedings in the

21 foregoing matter were adjourned.)

# Presentation to ACRS Subcommittee

## Chapter 9: Auxiliary Systems

## **Section 9.1 Fuel Storage and Handling**

March 22-23, 2012

Mitsubishi Heavy Industries, Ltd.

# MHI Presenters

**James Curry, Ph.D., P.E., – Lead Presenter**
***Mitsubishi Nuclear Energy Systems, Inc.***

**Naoki Kawata – Technical Expert**
***Mitsubishi Heavy Industries, Ltd.***
***Chapter 9 Engineer***

**Yoshiyuki Tanigawa – Technical Expert**
***Mitsubishi Heavy Industries, Ltd.***
***Chapter 9 Engineer***

**Thomas Fitzpatrick – Project Manager**
***Holtec International***

**Charles Bullard II – Principal Engineer**
***Holtec International***

**Bret Brickner – Senior Engineer**
***Holtec International***

# Acronyms

| | |
|---|---|
| ASME | :American Society of Mechanical Engineers |
| CMAA | :Crane Manufacturers Association of America |
| CVCS | :Chemical and Volume Control System |
| C/V | :Containment Vessel |
| EFWP | :Emergency Feedwater Pit |
| EPS | :Emergency Power Source |
| ESF | :Engineered Safety Feature |
| Hx | :Heat Exchanger |
| LLHS | :Light Load Handling System |
| MOV | :Motor-Operated Valve |
| OHLHS | : Overhead Heavy Load Handling System |
| PCS | :Permanent Cavity Seal |
| RAI | :Request for Additional Information |
| RHRS | :Residual Heat Removal System |
| RV | :Reactor Vessel |
| RWSAT | :Refueling Water Storage Auxiliary Tank |
| RWSP | :Refueling Water Storage Pit |
| R/B | :Reactor Building |
| SFP | :Spent Fuel Pit |
| SFPCS | :Spent Fuel Pit Cooling and Purification System |
| SSE | :Safe-Shutdown Earthquake |

# DCD Section 9.1 Fuel Storage and Handling

| Section | | Major Contents |
|---|---|---|
| 9.1 | Fuel Storage and Handling | 9.1.1 Criticality Safety of New and Spent Fuel Storage |
| | | 9.1.2 New and Spent Fuel Storage |
| | | 9.1.3 Spent Fuel Pit Cooling and Purification System |
| | | 9.1.4 Light Load Handling System (Related to Refueling) |
| | | 9.1.5 Overhead Heavy Load Handling System |

# 9.1.1 Criticality Safety of New and Spent Fuel Storage

- New and spent fuel storage facilities are located in the fuel handling area of the reactor building (R/B) which is designed to meet the seismic category I requirements of Regulatory Guide (RG) 1.29.

- New fuel is stored in low density racks installed in a dry new fuel storage pit.

- Spent fuel is stored in moderate density racks installed in a spent fuel pit (SFP) filled with borated water.

# 9.1.1 Criticality Safety of New and Spent Fuel Storage

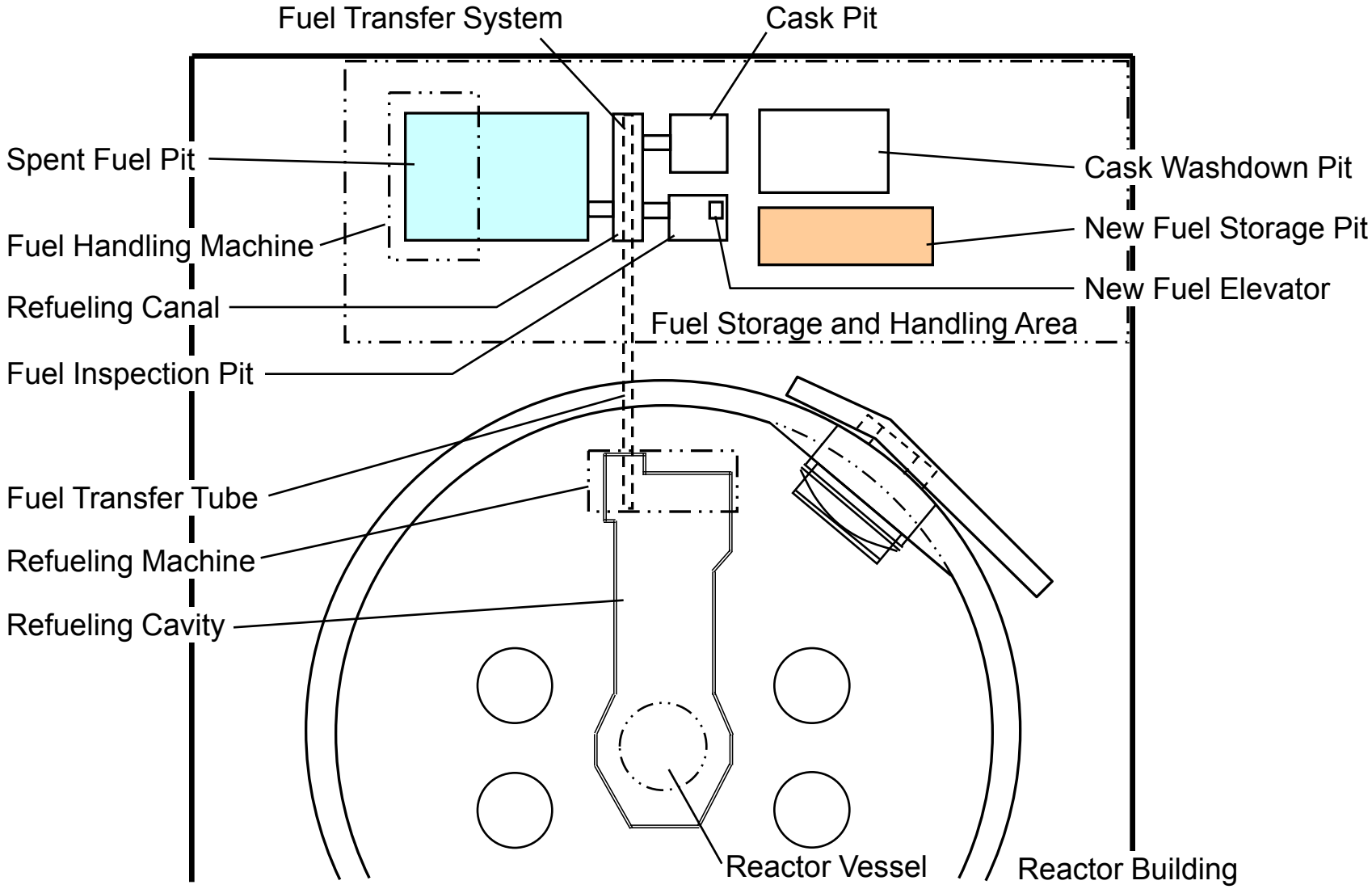


**Plan View of Light Load Handling System**

## 9.1.1 Criticality Safety of New and Spent Fuel Storage

- The robust concrete walls and ceiling surrounding the fuel storage and handling area is designed to withstand the loads and forces caused by earthquake, wind, tornadoes, floods, and internal and external missiles.
- New and spent fuel storage racks are designed to maintain the required degree of subcriticality, and are evaluated as seismic category I structures.
- Equipment potentially damaging the stored fuel is designed to be prevented from collapsing and falling down on the structures in the event of a safe-shutdown earthquake (SSE).

# 9.1.1 Criticality Safety of New and Spent Fuel Storage

- **Criticality is precluded by adequate design of fuel handing and storage facilities and by administrative control procedures. Criticality analyses are performed in accordance with the following acceptance criteria and relevant requirements.**
- **New Fuel Storage Rack**
  - ✓ 10 CFR 50.68 (b) item (2) and (3)

    $K_{eff}$* ≦ 0.95 for the flooded condition with unborated water

    $K_{eff}$* ≦ 0.98 for optimum moderation
- **Spent Fuel Storage Rack**
  - ✓ 10 CFR 50.68 (b) item (4)

    $K_{eff}$* ≦ 0.95 for the flooded condition with partial credit for soluble boron

    $K_{eff}$* < 1.0 with full density unborated water

* Maximum Keff value including all biases and uncertainties at a 95% probability and 95% confidence

## ➢ Analysis Conditions (1/2)

- ✓ Under the new fuel assumption, the fuel assembly is assumed to have a maximum enrichment of 5 wt% pursuant to 10 CFR 50.68 (b) item (7).
- ✓ Fuel assembly fabrication tolerances are considered.
- ✓ Credit is taken for the neutron absorption in the rack structural material and neutron poison, such as boron.
- ✓ The steel plate thickness and boron content are conservatively assumed to be minimum specification values.

## Analysis Conditions (2/2)

- ✓ New fuel storage rack
  - The new fuel storage rack cell is constructed of stainless steel.
  - A finite rack cell array and the surrounding concrete reflectors are used in the calculations.
- ✓ Spent fuel storage rack
  - The spent fuel storage rack cell is constructed of stainless steel with boron.
  - Metamic is selected as neutron absorber material.
  - An infinite rack array in the lateral direction is assumed.
- ✓ Material composition, fabrication tolerances of the fuel and rack, and the fuel location within the rack cell uncertainties are considered.

- **No open or confirmatory items remain on this subsection.**

# 9.1.2 New and Spent Fuel Storage

## - Structural Requirement -

- Structural design and stress analysis of the new and spent fuel storage racks are evaluated in accordance with the seismic category I requirements of Regulatory Guide 1.29.
- Loads and load combinations considered in the structural design and stress analysis are based on SRP Section 3.8.4, Appendix D.
- Racks can withstand a maximum uplift force based on the lifting capacity of the suspension hoist and the fuel handling machine.
- A subcritical array can be maintained in the event of a postulated drop of a fuel assembly and associated handling tool on a rack.

# 9.1.2 New and Spent Fuel Storage

## ➢ Major RAIs (Confirmatory Items)

| RAI No. | Question 09.01.02-X | RAI Topic / NRC Concern | RAI Response / DCD Impact |
|---|---|---|---|
| 387-2931 | 22 | **Preoperational test of the SFP:**<br><br>Include in the DCD evaluation of the leak-tightness of the spent fuel pool liner as one of the objectives of preoperational test. | ➢ MHI revised the DCD Chapter 14, Subsection 14.2.12.1.85 to add the test for leak-tightness of the SFP in objective, test method, and acceptance criteria of the preoperational test for the spent fuel pit cooling and purification system. |

# 9.1.2 New and Spent Fuel Storage

## ➢ Major RAIs (Confirmatory Items)

| RAI No. | Question 09.01.02-X | RAI Topic / NRC Concern | RAI Response / DCD Impact |
|---|---|---|---|
| 387-2931 | 23 | **<u>Blockage of the SFP leakage collection system:</u>**<br><br>Justify how the SFP leakage collection system meets the requirements of 10 CFR 20.1406 if the system is not periodically inspected to identify blockages.<br><br>Clarify in the DCD that the SFP leakage collection system is sized to allow cleaning of blockages. | ➢ MHI revised the DCD to clearly state that:<br>• The inside of the SFP leakage collection pipes are inspected using a device such as fiberscope, and cleaned if necessary, approximately every refueling outage.<br><br>• The SFP leakage collection pipes are sized to allow cleaning of blockages as specified in Regulatory Guide 4.21. |

# 9.1.2 New and Spent Fuel Storage

## ➢ Major RAIs (Issued/Open Action Applicant)

| RAI No. | Question 09.01.02-X | RAI Topic / NRC Concern | RAI Response / DCD Impact |
|---|---|---|---|
| 906-6332 | 26 | **<u>Containment Racks:</u>**<br><br>Description and evaluation of fuel racks in the refueling cavity are missing throughout the DCD.<br><br>Applicant should address SRP 9.1.2 and interfacing SRP sections. For example;<br>•Structural design of the racks<br>•Compatibility and chemical stability of the materials of the racks | [Preparation under way] |

# 9.1.3 Spent Fuel Pit Cooling and Purification System (SFPCS)

- The SFPCS is comprised of:
  - ✓ Two redundant cooling and purification trains.
  - ✓ Each train includes one pump, one heat exchanger (plate-type), one filter, and one demineralizer.
  - ✓ EPS can be aligned with SFP pumps as necessary.
- The SFPCS cools the SFP water by removing the decay heat generated by spent fuel assemblies in the SFP.
- The SFPCS purifies the borated water in SFP, RWSP, and RWSAT.
- The system piping is arranged such that the failure of any line cannot drain the SFP to a level less than 11.1 ft above the top of a stored assembly.
- The SFPCS is provided with Seismic Category I makeup water from the RWSP and the EFWP.
- The SFPCS trains, in conjunction with two trains of RHRS, maintain SFP temperature below 120°F during full core offload.

# 9.1.3 Spent Fuel Pit Cooling and Purification System (SFPCS)

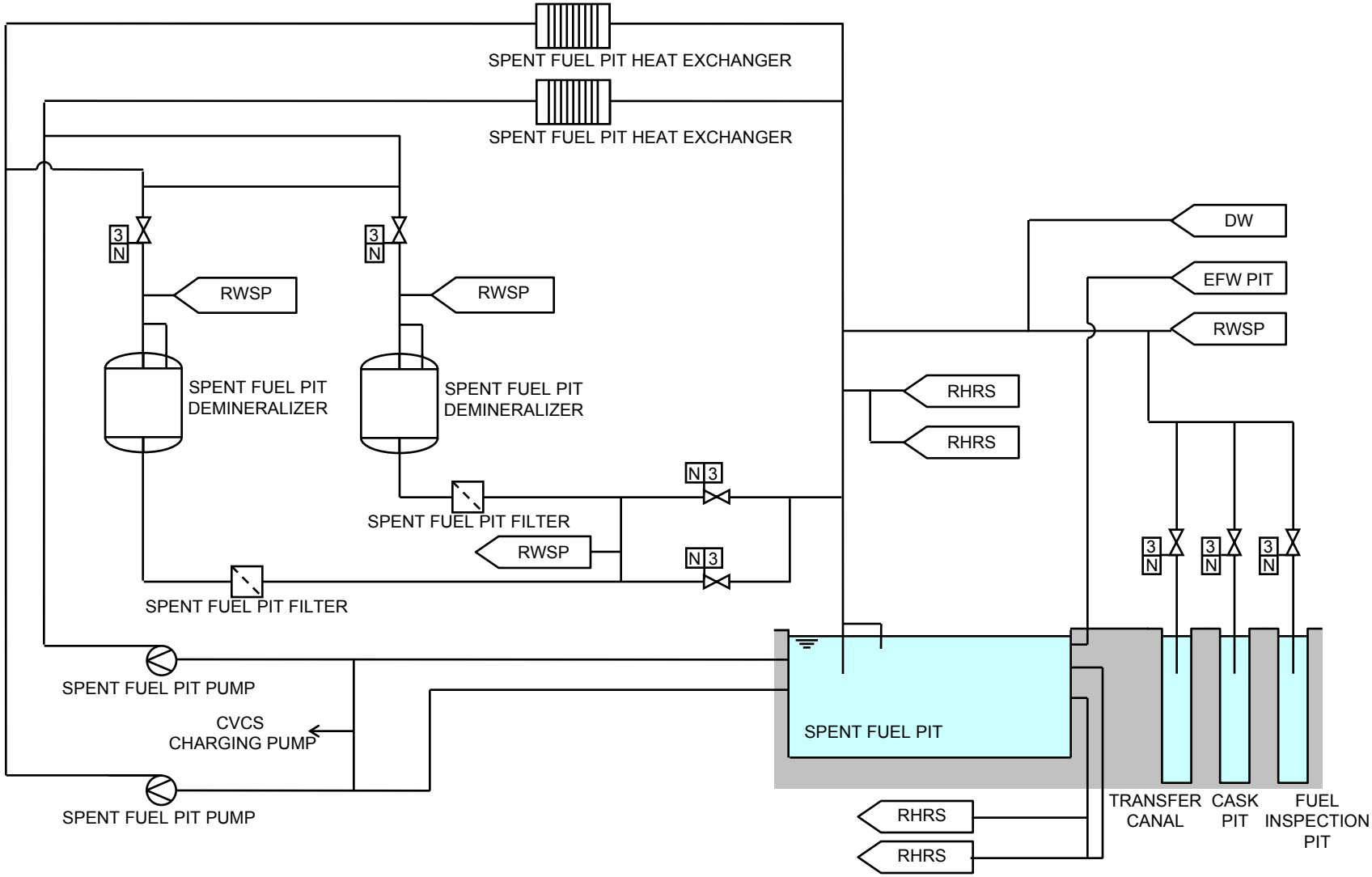

## ➢ Major RAI (Open Items)

| RAI No. | Question 09.01.03-X | RAI Topic / NRC Concern | RAI Response / DCD Impact |
|---|---|---|---|
| 735-5723 | 7 | **How presumed failures of non-safety-related portions of the SFPCS due to a seismic event or an internally generated missile event do not adversely affect the safety-related portion of the SFPCS.** | ➢ The local manual isolation valve between the safety and non-safety portion (VLV-101A/B) of each train will be changed to double, automatic isolation MOVs which close on a low-low SFP water level signal.<br>➢ Each SFP pump also will be tripped on the low-low SFP water level signal. |

# 9.1.4 Light Load Handling System (Related to Refueling)

- **The Light Load Handling System (LLHS) consists of the equipment and structures involved in the handling of new, irradiated, and spent fuel.**

- **All of the LLHS is non-safety related, except**
  - Fuel transfer tube and blind flange
    → serves as part of the containment
  - Permanent cavity seal
    → retains water of refueling cavity during refueling to keep fuels in transit submerged

- **The LLHS is designed to meet the criteria specified in**
  - ✓ **ANSI/ANS57.1-1992, "Design Requirements For Light Water Reactor Fuel Handling Systems"**

- **Subcriticality is maintained by design with the equipment fully loaded with fuel and the pool flooded with unborated water.**

# 9.1.4 Light Load Handling System (Related to Refueling)

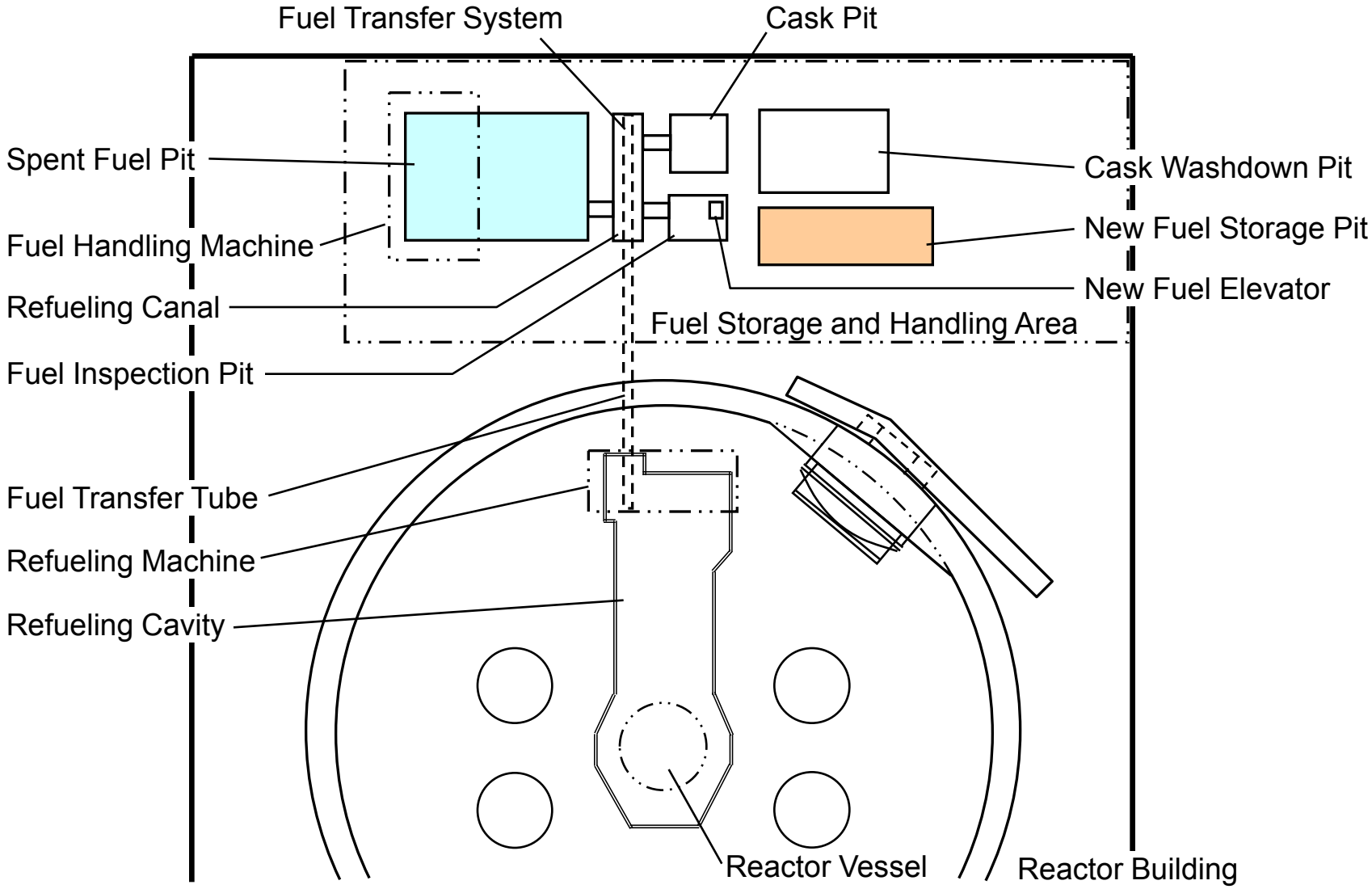


**Plan View of Light Load Handling System**

# 9.1.4 Light Load Handling System (Related to Refueling)

## ➢ Major RAIs (Confirmatory Items)

| RAI No. | Question 09.01.04-X | RAI Topic / NRC Concern | RAI Response / DCD Impact |
|---|---|---|---|
| 555-4385 | 19 | **Correction of wording:**<br><br>Replace the word, "Decontamination pit", with "Cask washdown pit" in accordance with the name change stated in the Question 09.01.04-11. | ➢ MHI will modify the inconsistent wordings used to stand for the cask washdown pit. (This is not technical issue.) |

# 9.1.4 Light Load Handling System (Related to Refueling)

## ➢ Major RAIs (Open Items)

| RAI No. | Question 09.01.04-X | RAI Topic / NRC Concern | RAI Response / DCD Impact |
|---|---|---|---|
| 887-6261 | 23 | **<u>Permanent Cavity Seal (PCS):</u>**<br>Will fabrication and installation of the PCS adversely affect the reactor vessel (RV)?<br><br>- Provide details about;<br>· Material<br>· Connection between the PCS and the RV<br><br>- Why ASME Section III, Class 3 will not be applied. | ➢ The PCS is<br>• made out of stainless steel (specific types of steel are provided in the response)<br>• indirectly attached to the RV through the seal ledge with bolts and welds<br><br>➢ ASME Section III is not applicable, because the PCS is:<br>• not a pressure-retaining component<br>• outside jurisdictional boundary of the RV |

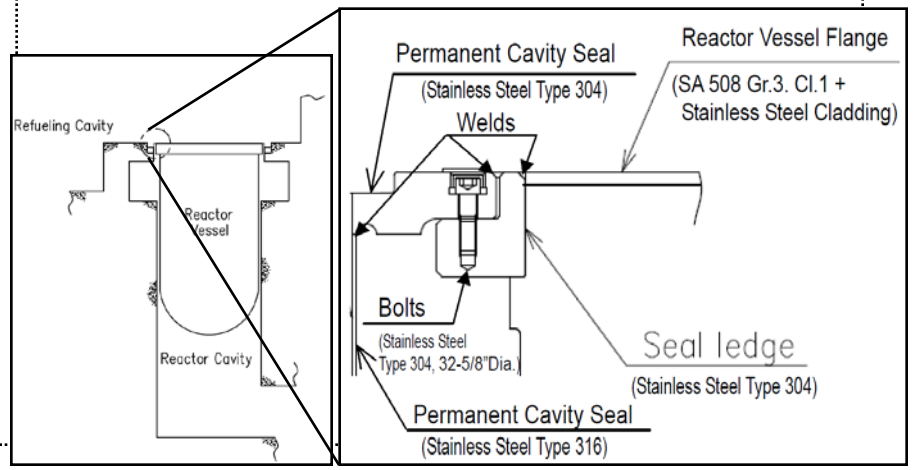

# 9.1.5 Overhead Heavy Load Handling System

- The Overhead Heavy Load Handling System (OHLHS) consists of devices used for critical load handling evolutions.
- The OHLHS cranes are designed to meet the criteria specified in
  - ✓ CMAA-70, 2000, "Specifications for Top Running Bridge and Gantry Type Multiple Girder Electric Overhead Traveling Cranes"
  - ✓ ASME B30.2, 2005, "Overhead and Gantry Cranes"
- The Polar Crane and the Main Hoist on the Spent Fuel Cask Handling Crane are designed as non-safety related, seismic category II, single-failure-proof cranes, in accordance with NUREG-0554.
- Travel range of the spent fuel cask handling machine is limited to prevent load drop on the new and spent fuel storage pit by physical stops on the travel rails of the machine and the hoist carriage. (See Figure 9.1.5-1 in DCD)

# 9.1.5 Overhead Heavy Load Handling System

## ➢ Major RAIs (Confirmatory Items)

| RAI No. | Question 09.01.05-X | RAI Topic / NRC Concern | RAI Response / DCD Impact |
|---|---|---|---|
| 616-4865 | 19 | **<u>Auxiliary Hoist on the Polar Crane:</u>**<br><br>Administrative procedure to disallow carrying critical loads is the only measure credited to prevent unacceptable load drop accident, which does not conform to SRP 9.1.5. | ➢ MHI revised the DCD to upgrade the Auxiliary Hoist on the Polar Crane to single failure-proof and committed to design the hoist in accordance with the requirement of ASME NOG-1 and NUREG-0554. |

# 9.1.5 Overhead Heavy Load Handling System

## ➢ Major RAIs (Open Items)

| RAI No. | Question 09.01.05-X | RAI Topic / NRC Concern | RAI Response / DCD Impact |
|---|---|---|---|
| 616-4865 | 18 | **Equipment Hatch Hoist:**<br><br>Justify how the SRP 9.1.5.III.4 guidance would be met for the Equipment Hatch Hoist, which is not single failure proof crane located over safe shut down equipment (SSE). | ➢ MHI will delete the description about the Equipment Hatch Hoist from Subsection 9.1.5, because the hoist is dedicated to raising and lowering the equipment hatch, and therefore does not fit into the category of OHLHS, which is used for critical load handling evolutions. |

# Presentation to ACRS Subcommittee

## Chapter 9: Auxiliary Systems

## **Section 9.2 Water Systems**

March 22-23, 2012

Mitsubishi Heavy Industries, Ltd.

# MHI Presenters

**James Curry, Ph.D., P.E. – Lead Presenter**
***Mitsubishi Nuclear Energy Systems, Inc.***

**Marc Hotchkiss, P.E. – Lead Presenter**
***Mitsubishi Nuclear Energy Systems, Inc.***

**Junya Hattori – Technical Expert**
***Mitsubishi Heavy Industries, Ltd.***
***Chapter 9 Engineer***

**Naoki Kawata – Technical Expert**
***Mitsubishi Heavy Industries, Ltd.***
***Chapter 9 Engineer***

**Motohisa Kitamori – Technical Expert**
***Mitsubishi Heavy Industries, Ltd.***
***Chapter 9 Engineer***

**Keita Otani– Technical Expert**
***Mitsubishi Heavy Industries, Ltd.***
***Chapter 9 Engineer***

# Acronyms (1/2)

| | |
|---|---|
| A/B | :Auxiliary Building |
| CDI | :Conceptual Design Information |
| CHP | :Charging Pump |
| CSF | :Condensate Storage Facilities |
| CCWS | :Component Cooling Water System |
| C/V | :Containment Vessel |
| CWS | :Circulating Water System |
| ECWS | :Essential Chilled Water System |
| ESW | :Essential Service Water |
| ESWS | :Essential Service Water System |
| Hx | :Heat Exchanger |
| HVAC | :Heating, Ventilation, and Air Conditioning |
| ITAAC | :Inspection, Test, Analysis, and Acceptance Criteria |
| LOCA | :Loss of Coolant Accident |
| LOOP | :Loss of Offsite Power |
| MCR | :Main Control Room |
| non-ECWS | :Non-Essential Chilled Water System |
| non-ESW | :Non-Essential Service Water |
| PSWS | :Potable and Sanitary Water System |
| R/B | :Reactor Building |
| RAI | :Request for Additional Information |

# Acronyms (2/2)

| | |
|---|---|
| RWSP | :Refueling Water Storage Pit |
| SSCs | :Structures, Systems and Components |
| SSE | :Safe-Shutdown Earthquake |
| T/B | :Turbine Building |
| TCS | :Turbine Component Cooling Water System |
| UHS | :Ultimate Heat Sink |

# DCD Section 9.2 Water Systems

| Section | | Major Contents | Safety-Related Function |
|---|---|---|---|
| 9.2 | Water Systems | 9.2.1 Essential Service Water System | Yes |
| | | 9.2.2 Component Cooling Water System | Yes |
| | | 9.2.4 Potable and Sanitary Water Systems | No |
| | | 9.2.5 Ultimate Heat Sink | Yes |
| | | 9.2.6 Condensate Storage Facilities (Demineralized Water, Condensate Storage, and Primary Makeup Water) | No |
| | | 9.2.7 Chilled Water System | Yes |
| | | 9.2.8 Turbine Component Cooling Water System | No |
| | | 9.2.9 Non-Essential Service Water System | No |

# 9.2.1 Essential Service Water System (ESWS)

- The ESWS is a safety-related system, capable of transferring heat loads from safety-related SSCs to the UHS during normal operating and accident conditions.
- The ESWS, in conjunction with the plant UHS, is designed to remove heat from the plant auxiliaries required to mitigate the consequences of a design basis event and for safe shutdown, assuming a single failure and one train unavailable due to maintenance coincident with a LOOP.
- The ESWP is interlocked with CCW pump operation to support uninterrupted heat removal.

- The ESWS is consists of:
  - ✓ Four 50%-capacity ESW pumps into four independent trains.
  - ✓ Two 100%-capacity parallel strainers in each ESW pump discharge line.
  - ✓ Backup to FSS (CDI item)

# 9.2.1 Essential Service Water System (ESWS)

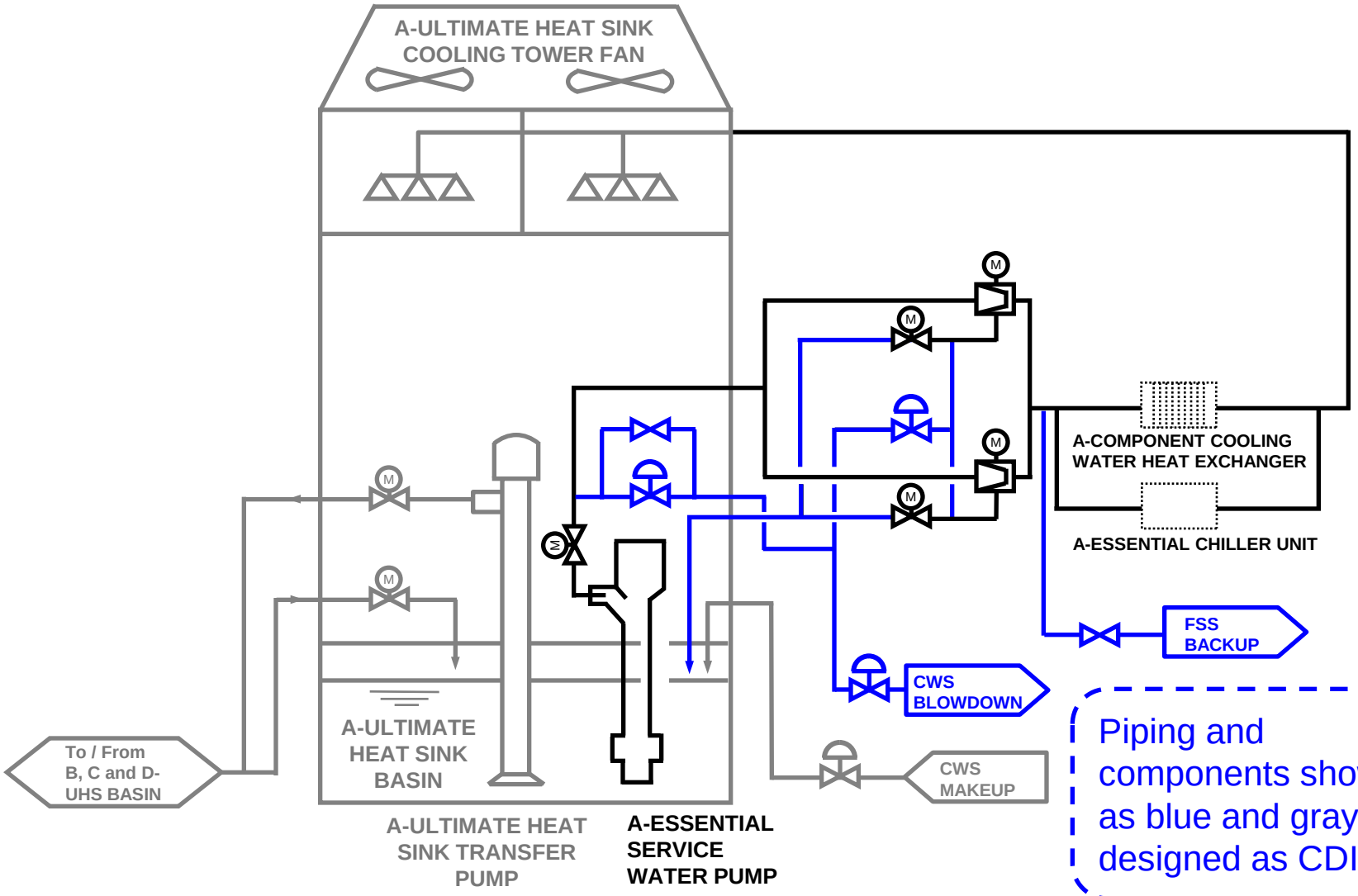


Piping and components shown as blue and gray are designed as CDI.

# 9.2.1 Essential Service Water System (ESWS)

## ➢ SER Open and Confirmatory Items

| RAI No. | Question 09.02.01-X | RAI Topic / NRC Concern | RAI Response / DCD Impact |
|---|---|---|---|
| xxx-6344 | - | Power supply to the boundary valve AOV-577<br>➢ FMEA maybe needed for AOV-577 and VLV-544A/B/C/D<br>➢ All boundary valves should be listed in FMEA | ➢ Draft RAI is currently under discussion. |
| - | - | Markup information in the Oct.14, 2011 letter | ➢ All of the relevant RAI responses |

# 9.2.2 Component Cooling Water System (CCWS)

- The CCWS is the closed, intermediate system between components cooled by CCW HX cooled by ESWS.
- The CCWS performs safety function of providing cooling water to components required for accident mitigation.
- Non-essential loads (non seismic/non safety) are isolated by automatic AOVs.
- The CCWS uses either offsite power supply or onsite Class 1E power supply.
- The CCWS has RCP cross-connect tie line between subsystems.
- Non-essential chilled water of fire protection water supply to CHP is available.
- The essential portion of CCWS is designed to Seismic Category I requirements to remain functional during and following an SSE.
- The CCWS is designed to withstand leakage in one train without loss of the system's safety function.
- The ESWP is interlocked with CCW pump operation to support uninterrupted heat removal.
- The CCWS is consists of:
  - ✓ Two independent 100% cooling capacity subsystems.
  - ✓ Each subsystem is served by one CCW surge tank.
  - ✓ Each subsystem consists of two 50% capacity trains.
  - ✓ Each train contains one CCW pump and one CCW HX.

# 9.2.2 Component Cooling Water System (CCWS)

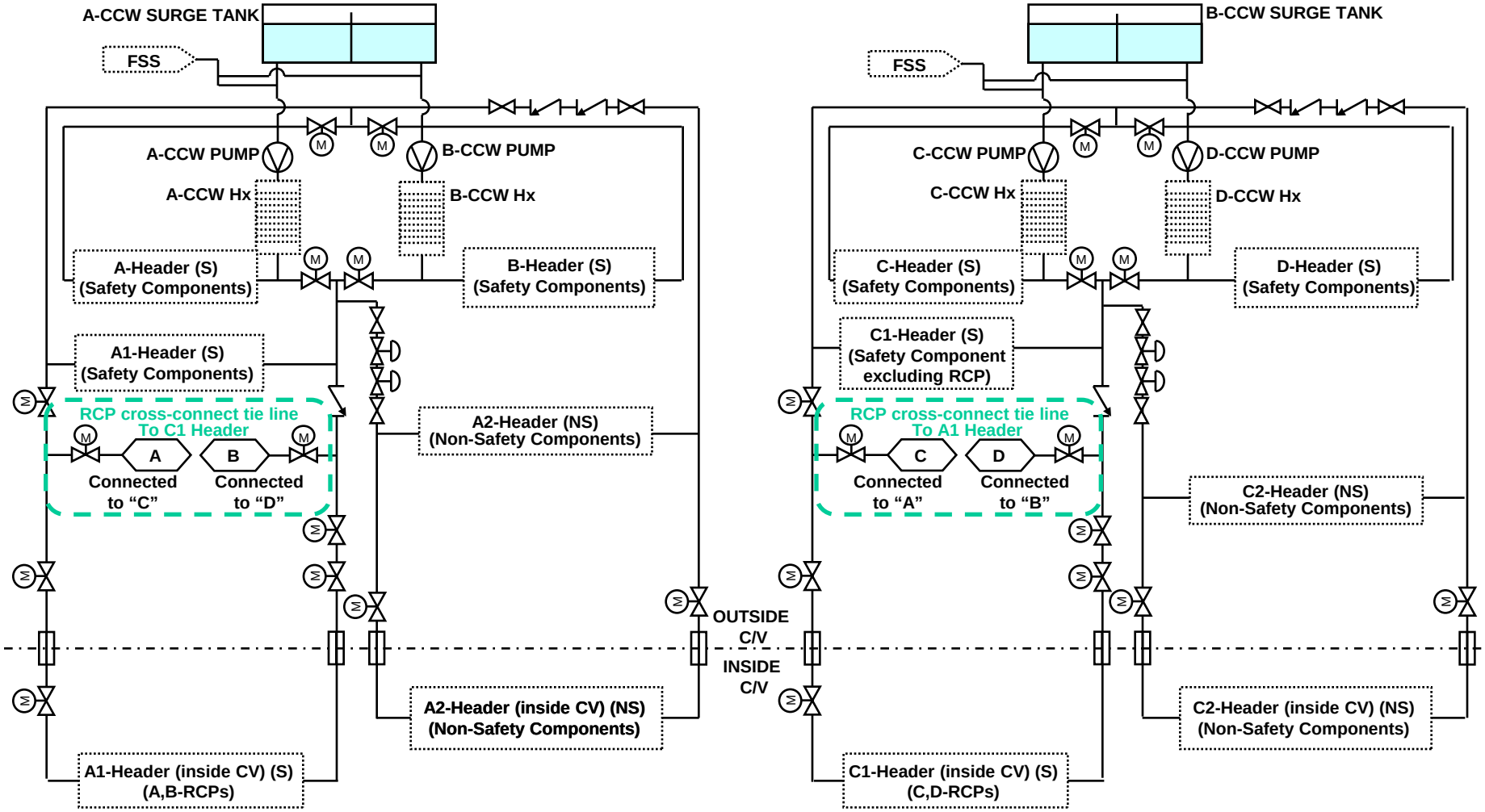

# 9.2.2 Component Cooling Water System (CCWS)

## ➢ SER Open and Confirmatory items

| RAI No. | Question 09.02.02-X | RAI Topic / NRC Concern | RAI Response / DCD Impact |
|---|---|---|---|
| 878-6200 | 85 | Design against postulated piping leakage in safety-related portion of CCWS | The safety-related portions of the CCWS meet the requirements of the BTP 3-4 B(iii)(1)(c) and therefore are exempted from postulating leakage cracks. |
| - | - | Markup information in the Oct.14, 2011 letter | All of the relevant RAI responses |

# 9.2.4 Potable and Sanitary Water Systems (PSWS)

**Potable and Sanitary Water Systems is designed as CDI with the following requirements**

- **PSWS is Non-Safety Related**
- **PSWS is protected against radioactive contamination through distribution piping by installing a backflow prevention device**
- **PSWS has no interconnection to any systems having the potential for contaminating radioactive material**

# 9.2.4 Potable and Sanitary Water Systems (PSWS)

## ➢ SER Open and Confirmatory items

| RAI No. | Question 09.02.04-X | RAI Topic / NRC Concern | RAI Response / DCD Impact |
|---|---|---|---|
| | | None | |
| | | | |

# 9.2.5 Ultimate Heat Sink (UHS)

**Ultimate Heat Sink is designed as CDI with the following requirement**

- **The UHS dissipates the maximum heat loads from the ESWS under normal and accident conditions, including that of the LOCA or safe shutdown scenario with LOOP under the worst combination of adverse environmental conditions, including freezing.**
- **The UHS cools the unit for a minimum of 30 days (or minimum of 36 days for cooling pond) without makeup water regarding RG 1.27.**
- **The UHS Related Structures are Seismic Category I structures.**
- **The UHS withstands the effect of natural phenomena such as earthquakes, tornadoes, hurricanes, floods, tsunami and seiches without loss of capability to perform its safety functions.**

# 9.2.5 Ultimate Heat Sink (UHS)

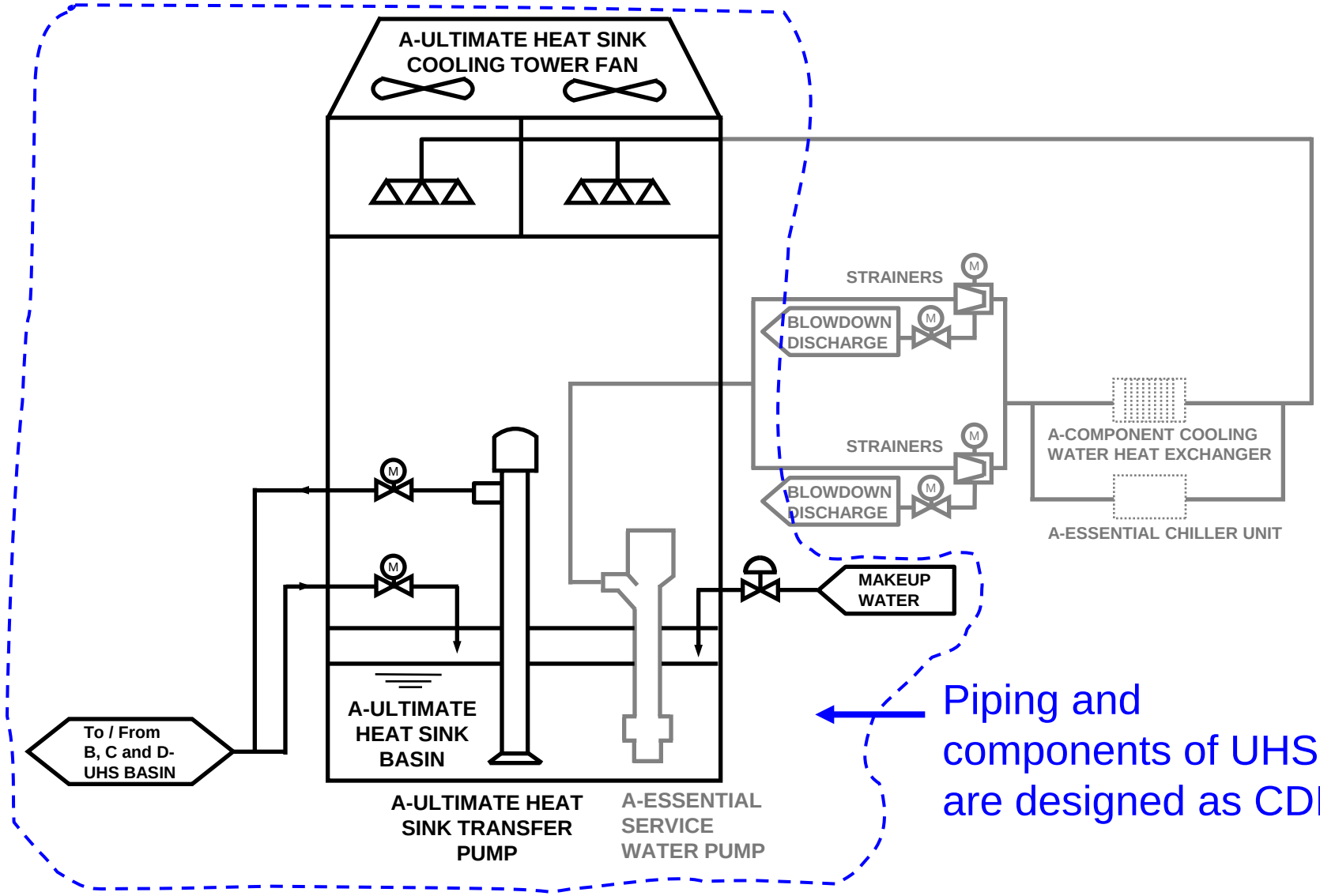


Piping and components of UHS are designed as CDI.

# 9.2.5 Ultimate Heat Sink (UHS)

## ➢ SER Open and Confirmatory items

| RAI No. | Question 09.02.05-X | RAI Topic / NRC Concern | RAI Response / DCD Impact |
|---|---|---|---|
| | | None | |
| | | | |

# 9.2.6 Condensate Storage Facilities (CSF)

- The CSF is a non safety-related system.
- The CSF provides treated water to primary and secondary systems.
- The CSF consists primarily of three systems:
  - Demineralized water system
  - Condensate storage and transfer system
  - Primary makeup water system

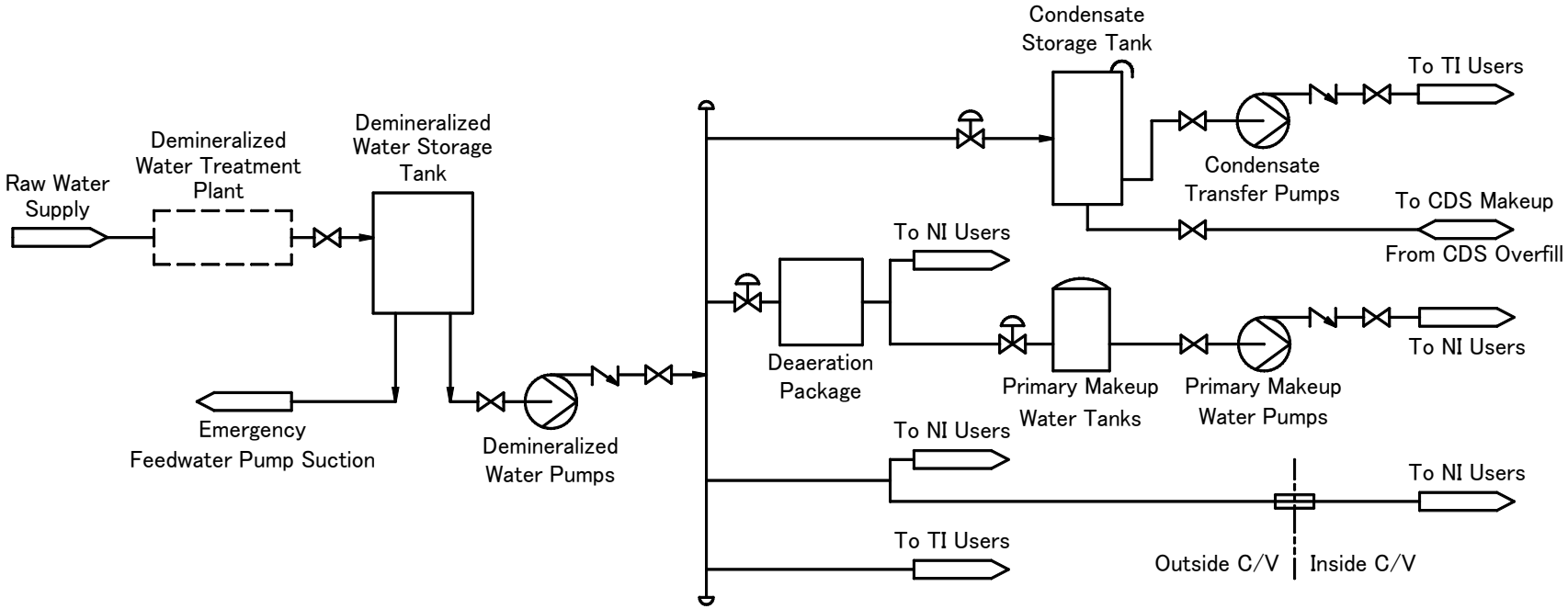

# 9.2.6 Condensate Storage Facilities (CSF)

## ➢ SER Open and Confirmatory Items

| RAI No. | Question 09.02.06-X | RAI Topic / NRC Concern | RAI Response / DCD Impact |
|---|---|---|---|
| 863-6148 | 3 | To explain the mitigation of the environmental effects that do not have impact on safety-related SSCs, even when CST and its dike fail. | ➢ Entrance of the buildings are located 1 foot above ground level.<br>➢ CST, its dike and pumps are located away from the safety-related SSCs.<br>➢ Graded slope and drainage system should be provided as site-specific plant design.<br>➢ Therefore, failure of the tank and dike does not impact safety-related SSCs.<br>➢ DCD will be revised accordingly. |

# 9.2.7 Chilled Water System

- The chilled water system includes the Essential Chilled Water System (ECWS) and Non-Essential Chilled Water System (Non-ECWS).
- The ECWS is safety-related system and performs the following functions:
  - ✓ Provides, during normal and emergency operation, chilled water for the plant safety related air-cooling and ventilation systems.
    - MCR HVAC System
    - Class 1E electrical room HVAC system
    - Safeguard component area HVAC system
    - Emergency feedwater pump area HVAC system
    - Safety related component area HVAC system
- The ECWS is consists of:
  - ✓ Four independent 50%-capacity chiller units into four independent trains.
  - ✓ Four independent 50%-capacity chilled water pumps into four independent trains.
  - ✓ Four independent 50%-capacity compression tanks into four independent trains.

# 9.2.7 Chilled Water System

## Essential Chilled Water System

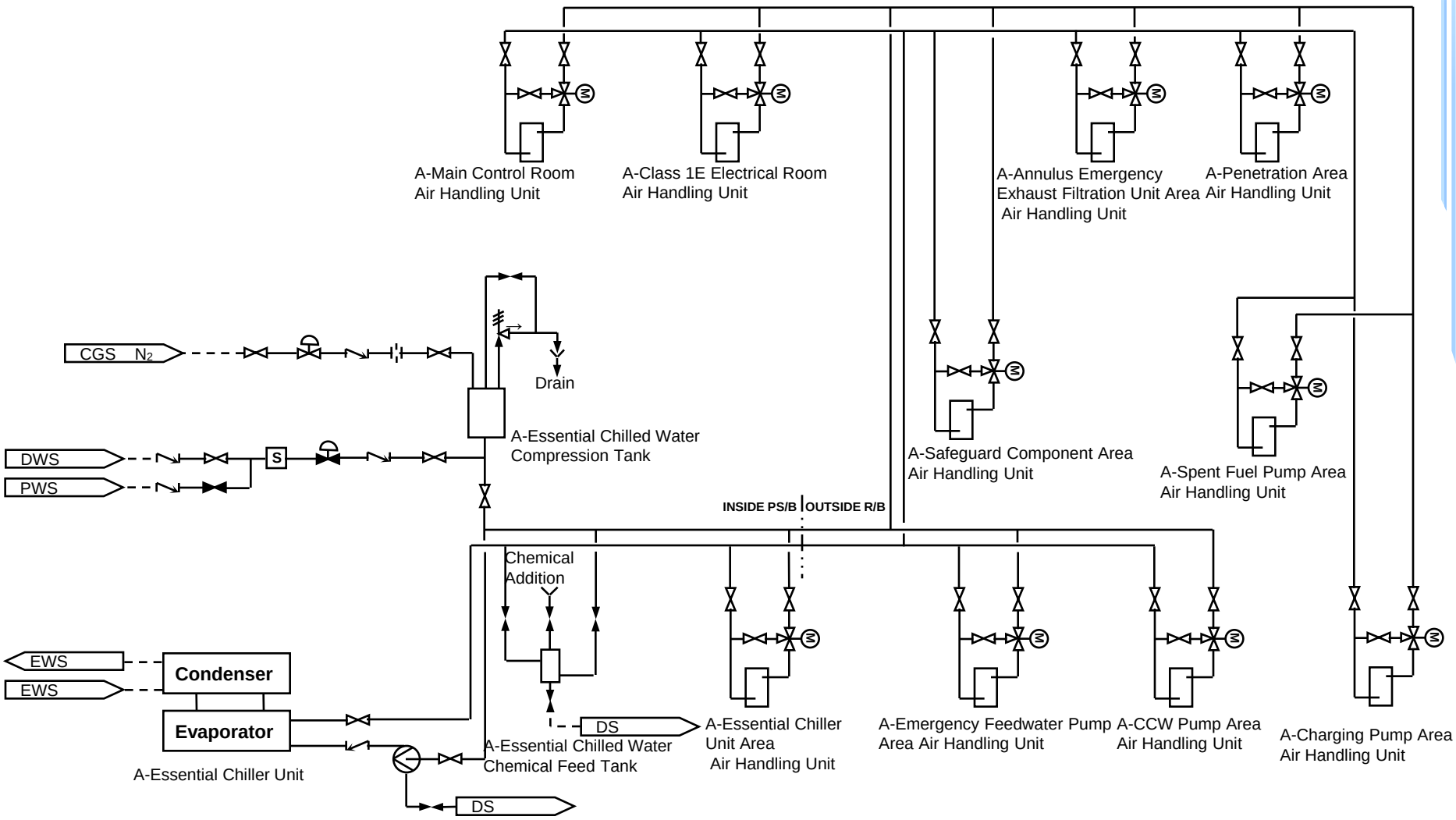

# 9.2.7 Chilled Water System

- The Non-ECWS is non-safety related system with the exception of piping and valves between and including containment isolation valves.
- The Non-ECWS performs the following function:
  - ✓ Provide chilled water for the HVAC systems serving the non-safety related areas during plant normal operation and LOOP.
  - ✓ Connect to the CCWS to provide alternate component cooling water to the charging pumps and to provide alternate cooling water to the containment fan cooler units from CCWS.

# 9.2.7 Chilled Water System

## Non-Essential Chilled Water System

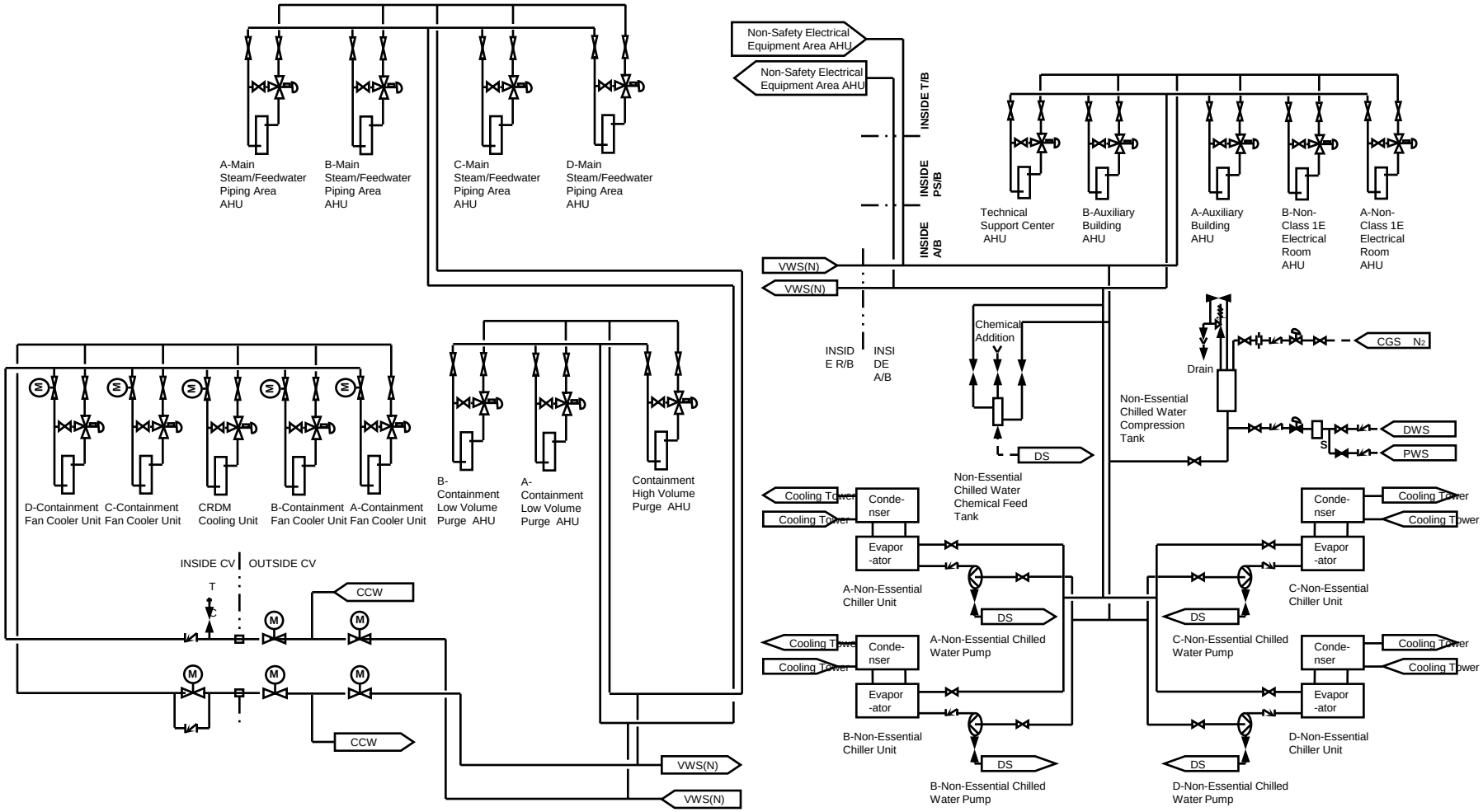

# 9.2.7 Chilled Water System

## ➢ SER Open and Confirmatory Items

| RAI No. | Question 09.02.XX-X | RAI Topic / NRC Concern | RAI Response / DCD Impact |
|---|---|---|---|
| | | There are no open and confirmatory items for 9.2.7. | |

# 9.2.8 Turbine Component Cooling Water Systems (TCS)

- The TCS is a non safety-related system.
- The TCS provides demineralized cooling water for removal of heat from various T/B heat loads and rejection of heat to the non-essential service water system.

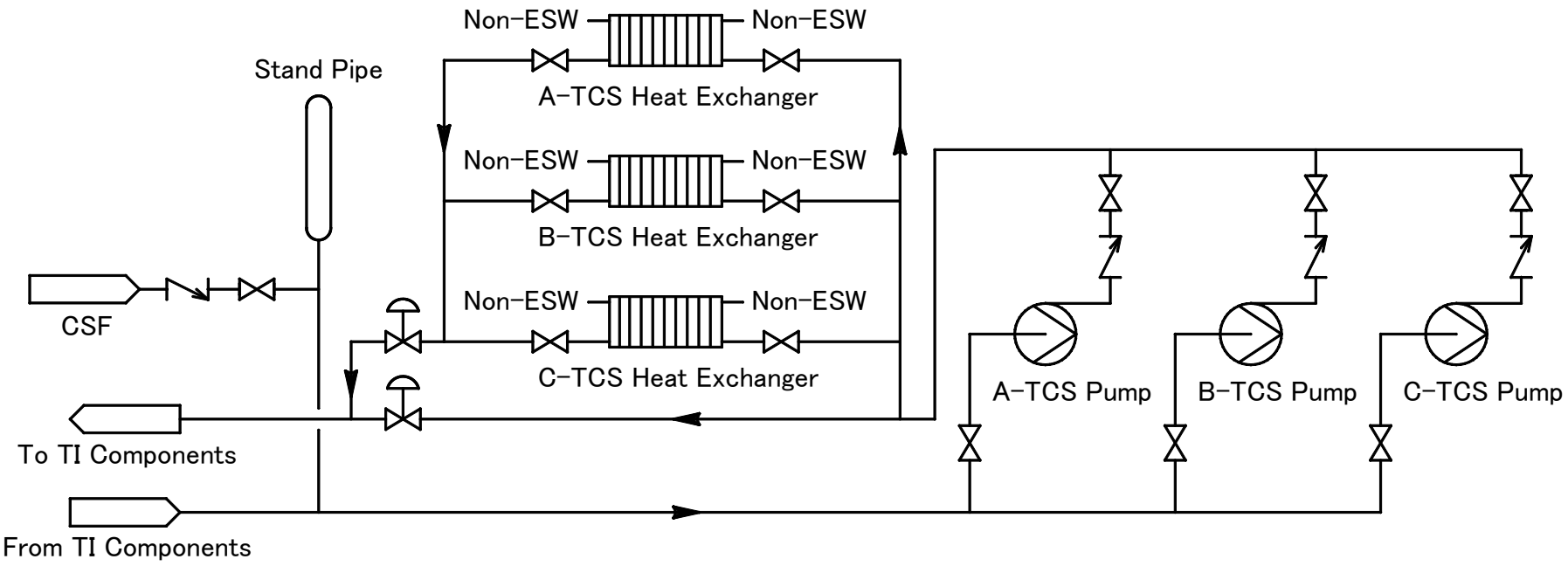

# 9.2.8 Turbine Component Cooling Water Systems (TCS)

## ➢ SER Open and Confirmatory items

| RAI No. | Question 09.02.XX-X | RAI Topic / NRC Concern | RAI Response / DCD Impact |
|---|---|---|---|
| | | None | |

# 9.2.9 Non-Essential Service Water System (non-ESW)

- The non-ESW is a non safety-related system.
- The non-ESW provides cooling water to remove heat from the TCS via the TCS heat exchanger and discharged to the heat sink via circulating water system (CWS).

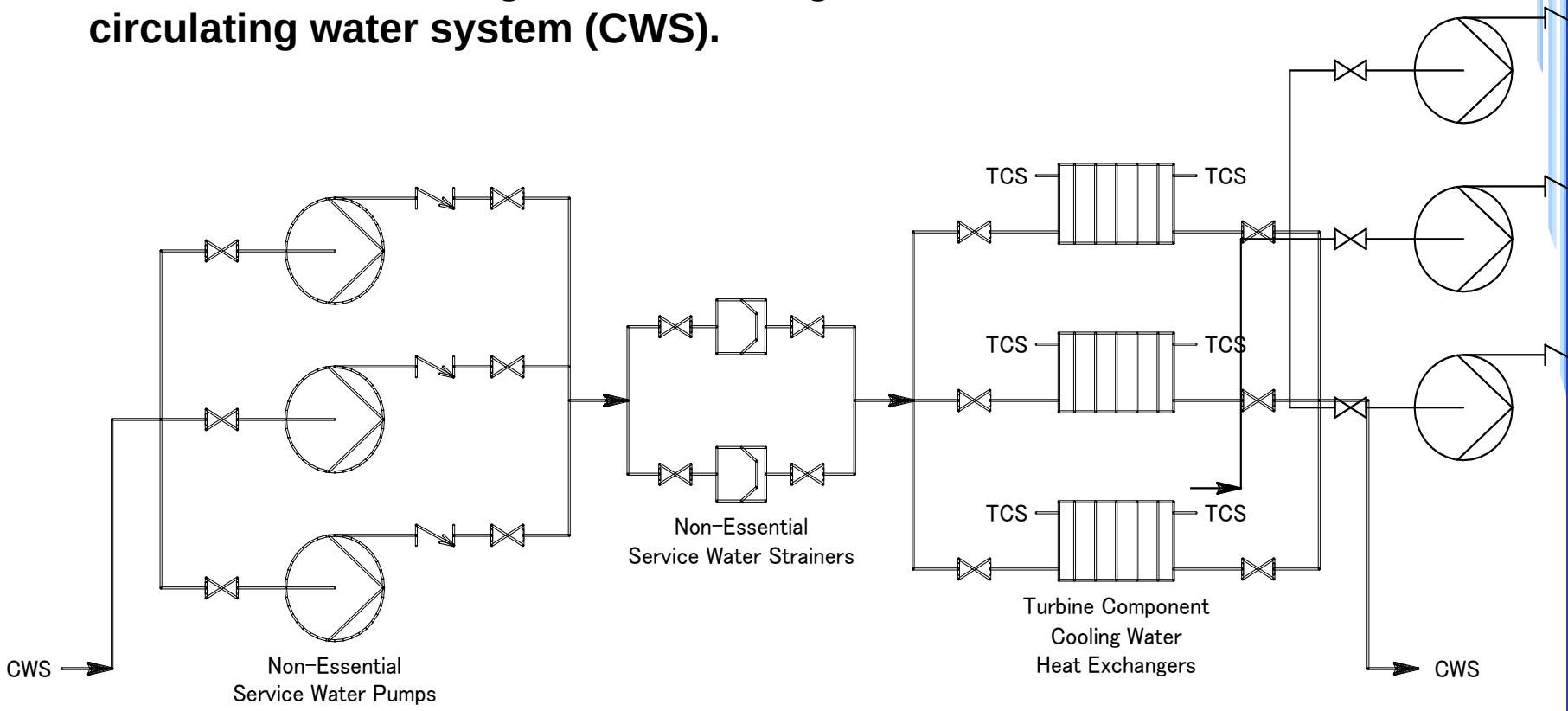

# 9.2.9 Non-Essential Service Water System (non-ESW)

## ➢ SER Open and Confirmatory items

| RAI No. | Question 09.02.XX-X | RAI Topic / NRC Concern | RAI Response / DCD Impact |
|---|---|---|---|
| | | None | |

# Presentation to ACRS Subcommittee

## Chapter 9: Auxiliary Systems

## **Section 9.3 Process Auxiliaries**

March 22-23, 2012

Mitsubishi Heavy Industries, Ltd.

# MHI Presenters

**James Curry, Ph.D., P.E., – Lead Presenter**
***Mitsubishi Nuclear Energy Systems, Inc***

**Naoki Kawata – Technical Expert**
***Mitsubishi Heavy Industries, Ltd.***
***Chapter 9 Engineer***

**Motohisa Kitamori – Technical Expert**
***Mitsubishi Heavy Industries, Ltd.***
***Chapter 9 Engineer***

# Acronyms (1/2)

| | |
|---|---|
| AOV | : Air Operated Valve |
| A/B | : Auxiliary Building |
| BA | : Boric Acid |
| CAS | : Compressed Air System |
| CAGS | : Compressed Air and Gas Systems |
| CGS | : Compressed Gas System |
| CVCS | : Chemical and Volume Control System |
| C/V | : Containment Vessel |
| ECCS | : Emergency Core Cooling System |
| EFDS | : Equipment and Floor Drain Systems |
| ESF | : Engineered Safety Features |
| GWMS | : Gaseous Waste Management System |
| HUT | : Holdup Tank |
| HVAC | : Heating, Ventilation, and Air Conditioning |
| HEPA | : High-Efficiency Particulate Air |
| IAS | : Instrument Air System |

# Acronyms (2/2)

| | |
|---|---|
| LWMS | : Liquid Waste Management System |
| PASS | : Post-Accident Sampling System |
| PGSS | : Primary Gaseous Sampling System |
| PLSS | : Primary Liquid Sampling System |
| PSS | : Process and Post-Accident Sampling Systems |
| PS/B | : Power Source Building |
| RAI | : Request for Additional Information |
| RCPB | : Reactor Coolant Pressure Boundary |
| RCS | : Reactor Coolant System |
| RCP | : Reactor Coolant Pump |
| SIS | : Safety Injection System |
| SSAS | : Station Service Air System |
| SSS | : Secondary Sampling System |
| SGBDSS | : Steam Generator Blowdown Sampling System |
| T/B | : Turbine Building |
| WWS | : Waste Water System |

# DCD Section 9.3 Process Auxiliaries

| Section | | Major Contents | Safety-Related function |
|---|---|---|---|
| 9.3 | Process Auxiliaries | 9.3.1 Compressed Air and Gas Systems (CAGS) | Yes |
| | | 9.3.2 Process and Post-Accident Sampling System (PSS) | Yes |
| | | 9.3.3 Equipment and Floor Drain System (EFDS) | Yes |
| | | 9.3.4 Chemical and Volume Control System (CVCS) | Yes |

# 9.3.1 Compressed Air and Gas Systems (CAGS)

- **The CAGS has no safety-related function except for containment isolation.**
- **The CAGS consist of:**
  - ✓ Instrument Air System (IAS)
  - ✓ Station Service Air System (SSAS)
  - ✓ Compressed Gas System (CGS)

- **IAS**
  - ✓ The IAS consists of two 100% trains with a compressor, an air receiver, and an air dryer in each train.
  - ✓ The safety-related AOVs fail in safe position on loss of IA and do not need IAS to perform a safety function.
- **SSAS**
  - ✓ The SSAS consists of three 50% trains with compressors.
  - ✓ Three compressor trains share two receivers and two dryers.
  - ✓ The SSAS can supply IAS if additional air is needed.
- **CGS**
  - ✓ The CGS consists of high pressure nitrogen gas, low pressure nitrogen gas, and hydrogen gas distribution subsystems and provide pressure-regulated gases for purging, diluting, and inerting.
  - ✓ High pressure nitrogen gas is supplied to SIS Accumulators.

# 9.3.1 Compressed Air and Gas Systems (CAGS)

## INSTRUMENT AIR SYSTEM

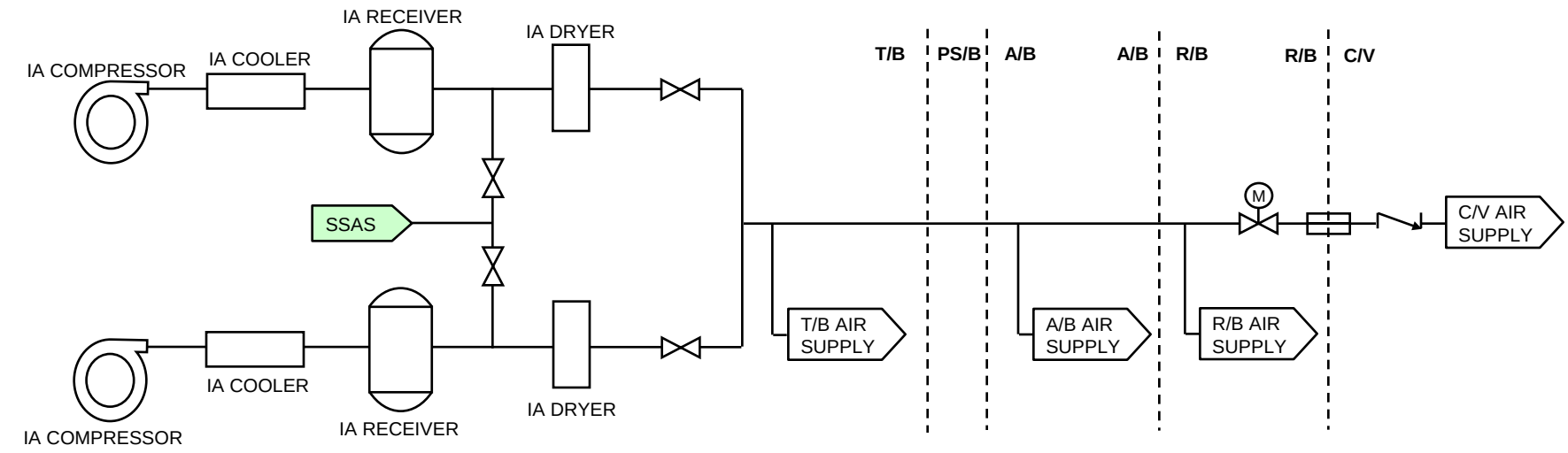


## STATION SERVICE AIR SYSTEM

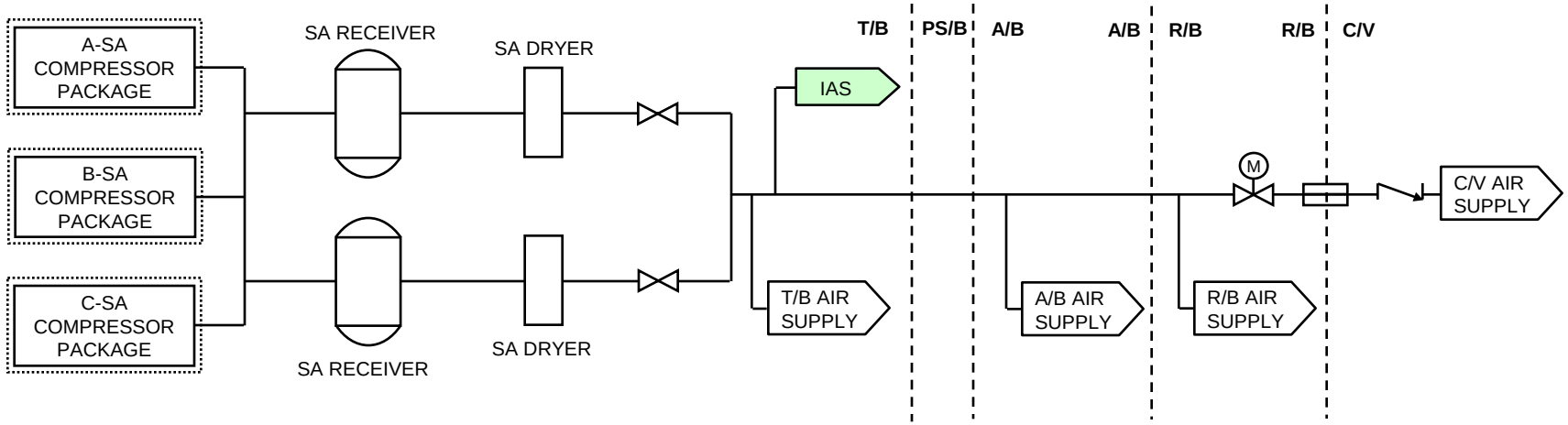

## SER Open and Confirmatory Items

| RAI No. | Question 09.03.01-X | RAI Topic / NRC Concern | RAI Response / DCD Impact |
|---|---|---|---|
| | | None | |

# 9.3.2 Process and Post-Accident Sampling Systems (PSS)

PSS have no safety-related function except for containment isolation. The PSS includes the following sub-systems:

- The Primary Liquid Sampling System (PLSS)
- The Primary Gaseous Sampling System (PGSS)
- The Post-Accident Sampling System (PASS)
- The Secondary Sampling System (SSS)
- The SGBD Sampling System (SGBDSS)
- Manual local grab sample provision

Each subsytem performs the following function:

- PLSS collects liquid samples from RCS and auxiliary systems for analysis.
- PGSS collects gaseous samples from containment atmosphere.
- PASS collects highly radioactive samples of the reactor coolant, refueling water storage pit water and containment atmosphere for analysis following accident.
- SSS monitors water sample from the turbine cycle so as to control water chemistry.
- SGBDSS monitors secondary water in SGs to maintain acceptable water chemistry and detect primary to secondary SG tube leakage.
- Manual local grab sample allows collection of liquid samples from various sampling point for analysis.

## SER Open and Confirmatory Items

| RAI No. | Question 09.03.02-X | RAI Topic / NRC Concern | RAI Response / DCD Impact |
|---|---|---|---|
| | | None | |

# 9.3.3 Equipment and Floor Drain Systems (EFDS)

**EFDS has no safety function except the isolation valves installed in the drainage piping from the ESF rooms. The EFDS includes the following sub-systems:**

- **Radioactive liquid waste**
- **Non-radioactive liquid waste**
- **Chemical and detergent liquid waste**
- **Oily liquid waste**

**EFDS performs the following functions:**

- **EFDS collects liquid waste separately depending on the liquid waste property from equipment and floor drains by gravity during all modes of operation.**
- **Collected potential radioactive liquid waste in the EFDS is transferred to the LWMS for processing while collected non radioactive liquid waste is transferred to the T/B sump for processing.**

# 9.3.3 Equipment and Floor Drain Systems (EFDS)

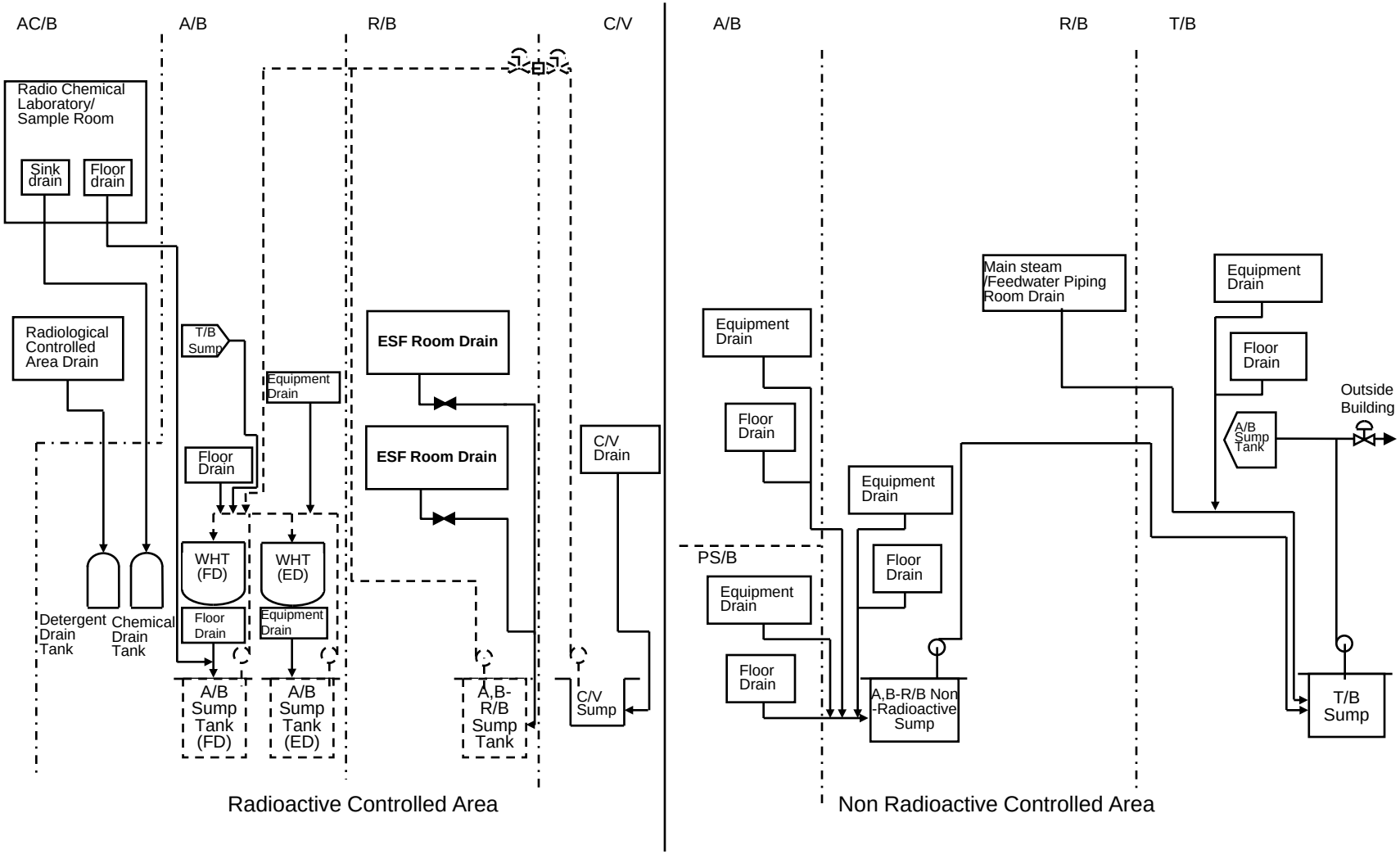


Equipment and Floor Drain System Flow Diagram

# 9.3.3 Equipment and Floor Drain Systems (EFDS)

## ➢ SER Open and Confirmatory Items

| RAI No. | Question 09.03.03-X | RAI Topic / NRC Concern | RAI Response / DCD Impact |
|---|---|---|---|
| | | None | |

# 9.3.4 Chemical and Volume Control System (CVCS)

**CVCS performs the following functions:**

- **Maintain the coolant inventory in the RCS for all modes of operation**
- **Provide seal-water flow to the RCP**
- **Provide makeup capability for small RCS leaks**
- **Regulate the boron concentration in the reactor coolant**
- **Control the reactor coolant water chemistry**
- **Purify the reactor coolant by removal of the fission and activation products**

**The CVCS performs or supports the following safety-related functions:**

- **Provide reactor coolant pressure boundary (RCPB)**
- **Containment isolation for the CVCS lines penetrating the containment**
- **Provide capability to isolate the charging line upon ECCS actuation signal and high pressurizer water level signal**
- **Isolation of RCS boron dilution sources to preclude inadvertent reactivity additions**

# 9.3.4 Chemical and Volume Control System (CVCS)

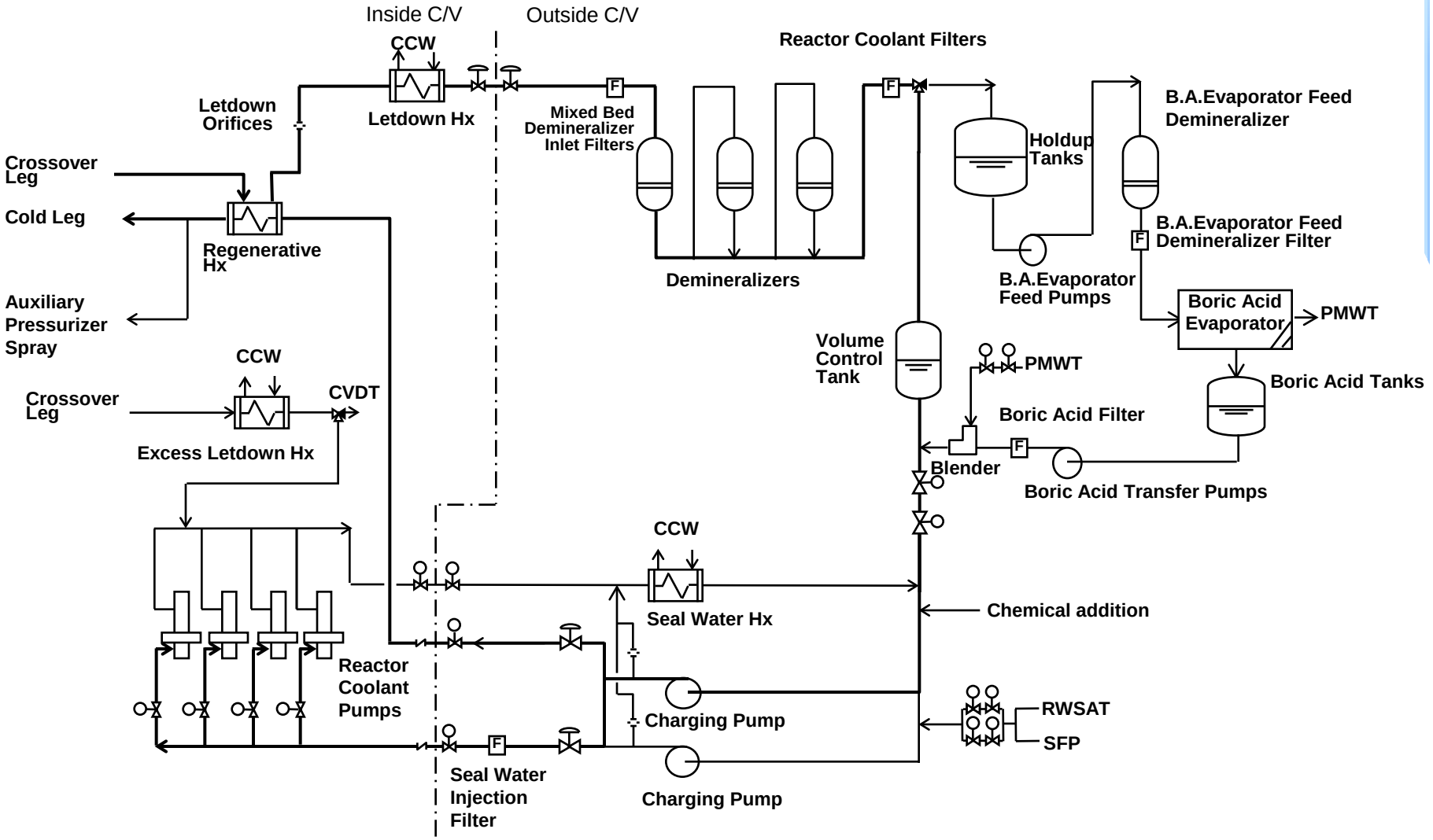

## SER Open and Confirmatory Items

| RAI No. | Question 09.03.04-X | RAI Topic / NRC Concern | RAI Response / DCD Impact |
|---|---|---|---|
| | | None | |

Presentation to ACRS Subcommittee

Chapter 9: Auxiliary Systems

# Section 9.4 Air Conditioning, Heating, Cooling, and Ventilation Systems

March 22-23, 2012

Mitsubishi Heavy Industries, Ltd.

# MHI Presenters

**Marc Hotchkiss, P.E. – Lead Presenter**

***Mitsubishi Nuclear Energy Systems, Inc.***

**Junya Hattori – Technical Expert**

***Mitsubishi Heavy Industries, Ltd.***

***Chapter 9 Engineer***

**Keita Otani – Technical Expert**

***Mitsubishi Heavy Industries, Ltd.***

***Chapter 9 Engineer***

# Acronyms (1/1)

| | |
|---|---|
| A/B | : Auxiliary Building |
| AC/B | : Access Building |
| ASME | : American Society of Mechanical Engineers |
| CFR | : Code of Federal Regulations |
| CRE | : Control Room Envelope |
| COL | : Combined License |
| CRDM | : Control Rod Drive Mechanism |
| ESF | : Engineered Safety Features |
| GDC | : General Design Criteria |
| HEPA | : High-efficiency Particulate Air |
| HVAC | : Heating, Ventilation, and Air Conditioning |
| ITAAC | : Inspection, Test, Analysis, and Acceptance Criteria |
| LOCA | : Loss-of-coolant Accident |
| MCR | : Main Control Room |
| PS/B | : Power Source Building |
| R/B | : Reactor Building |
| RG | : Regulatory Guide |
| RIS | : Regulatory Issue Summary |
| SRP | : Standard Review Plan |
| SSC | : Structure, System, and Component |
| T/B | : Turbine Building |
| TSC | : Technical Support Center |

# DCD Section 9.4 Air Conditioning, Heating, Cooling, and Ventilation Systems

| Section | | Major Contents | Safety-Related function |
|---|---|---|---|
| 9.4 | Air Conditioning, Heating, Cooling, and Ventilation Systems | 9.4.1 Main Control Room Heating, Ventilation and Air Conditioning System | Yes |
| | | 9.4.2 Spent Fuel Pool Area Ventilation System | Not Applicable |
| | | 9.4.3 Auxiliary Building Ventilation System | Yes |
| | | 9.4.4 Turbine Building Area Ventilation System | No |
| | | 9.4.5 Engineered Safety Feature Ventilation System | Yes |
| | | 9.4.6 Containment Ventilation System | Yes |

# 9.4.1 Main Control Room Heating, Ventilation and Air Conditioning System (MCR HVAC System)

- **The MCR HVAC System provides and controls the proper environment in the MCR and other areas within the control room envelope (CRE).**
- **The MCR HVAC System is a safety-related system and performs the following functions:**
  - ✓ Excludes entry of airborne radioactivity into the CRE and removes radioactive material from the CRE environment.
  - ✓ Supports and maintains CRE habitability and permits personnel occupancy and proper functioning of instrumentation during normal conditions and design basis accidents.

# 9.4.1 Main Control Room Heating, Ventilation and Air Conditioning System (MCR HVAC System)

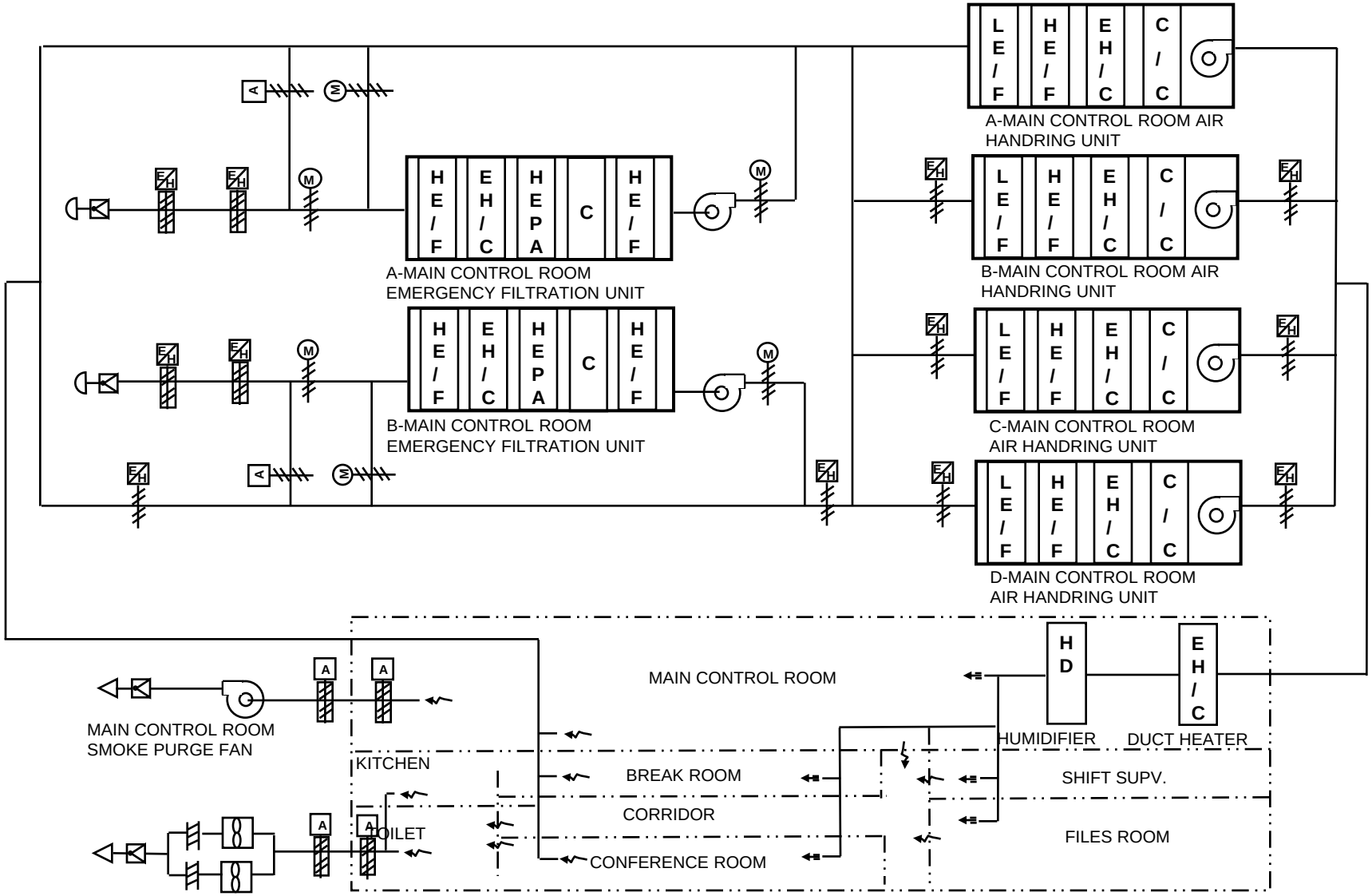

# 9.4.1 Main Control Room Heating, Ventilation and Air Conditioning System (MCR HVAC System)

## ➢ Open Items and Confirmatory Items

| RAI No. | Question 09.04.01-X | RAI Topic / NRC Concern | RAI Response / DCD Impact |
|---|---|---|---|
| 883-6063 | 29 | Open Item 09.04.01-29<br>- Provide the calculated values for maximum component temperatures in the adsorber section with normal ventilation unit flow and with filtration unit shutdown (post-LOCA condition) to conclude that design limiting temperature of 300F is not exceeded.<br>- Provide the maximum expected post-accident radioactively-induced temperature of the charcoal filter beds. | ➢ MHI is discussing draft response with NRC staff:<br>✓ The charcoal adsorber is designed in accordance with RG 1.52 and the actual loading is expected to be lower such that iodine desorption temperature would not be challenged. The high temperature alarm setpoint is established to prevent exceeding the temperature at which iodine desorption can occur.<br>✓ The high-high temperature alarm setpoint is established to prevent exceeding the temperature at which charcoal ignition can occur. |

# 9.4.1 Main Control Room Heating, Ventilation and Air Conditioning System (MCR HVAC System)

## ➢ Open Items and Confirmatory Items

| RAI No. | Question 09.04.01-X | RAI Topic / NRC Concern | RAI Response / DCD Impact |
|---|---|---|---|
| 883-6063 | 29 | Open Item 09.04.01-29 (continued)<br><br>- Provide the maximum mass loading on the upstream HEPA filters of both the MCR emergency filter trains and the Annulus Emergency Exhaust System filter trains. | ✓ The HEPA filter unit is designed in accordance with RG 1.52 and ASME AG-1. HEPA filter particulate loading is expected to be low relative to rated dust loading due to the installed upstream high efficiency pre-filter. The HEPA filters are installed to include margin over the design flowrate.<br><br>MHI is in discussion with NRC staff regarding final resolution. |

# 9.4.1 Main Control Room Heating, Ventilation and Air Conditioning System (MCR HVAC System)

## ➢ Open Items and Confirmatory Items

| RAI No. | Question 09.04.01-X | RAI Topic / NRC Concern | RAI Response / DCD Impact |
|---|---|---|---|
| 883-6063 | 30 | Open Item 09.04.01-30<br><br>- Provide additional information related to the deletion of ITAAC Item 12 from Tier 1 Table 2.6.5-1 related to AAC GTG reliability. | MHI is in discussion with NRC staff regarding further substantiating the reason for this deletion. |
| 883-6063 | 31 | Open Item 09.04.01-31<br><br>Provide justification for non-safety related MCR HVAC humidifiers and controls.<br><br>NRC staff requests a minimum credible humidity for the site conditions permitted in the DC with no humidity control to use for the qualification of control room electrical equipment or the change in the plant design to include safety-related humidifiers. | The response to this open item is under development. |

# 9.4.1 Main Control Room Heating, Ventilation and Air Conditioning System (MCR HVAC System)

## ➢ Open Items and Confirmatory Items

| RAI No. | Question 09.04.01-X | RAI Topic / NRC Concern | RAI Response / DCD Impact |
|---|---|---|---|
| 883-6063 | 32 | <u>Open Item 09.04.01-32</u><br><br>Provide additional information regarding the design of the MCR air handling unit cooling coils and provisions to prevent coil leakage from entering the MCR through the supply duct. | ➢ MHI provided:<br>✓ The safety-related, seismic category I MCR HVAC cooling coils are not subject to postulated failure consistent with the requirements of GDC 4. Therefore, special design features to protect against a cooling coil rupture or significant leak are not warranted. Normal AHU drains accommodate condensation and minor leakage.<br><br>MHI is in discussion with NRC staff regarding final resolution. |

# 9.4.1 Main Control Room Heating, Ventilation and Air Conditioning System (MCR HVAC System)

## ➢ Open Items and Confirmatory Items

| RAI No. | Question 09.04.01-X | RAI Topic / NRC Concern | RAI Response / DCD Impact |
|---|---|---|---|
| 825-5999 | 09.04.05-21 | Confirmatory Item 09.04.05-21<br><br>Provide a reference to the updated March, 2011 version of MUAP-10020 in the DCD. | ➢ As described in the response to the RAI, MHI intends to revise the reference to MUAP-10020 in the next revision of the DCD to support closure of this confirmatory item. |

# 9.4.3 Auxiliary Building Ventilation System

**The Auxiliary Building Ventilation System includes the following sub-systems:**

- ✓ Auxiliary building HVAC system
- ✓ Non-Class 1E electrical room HVAC system
- ✓ Main steam/feedwater piping area HVAC system
- ✓ Technical support center (TSC) HVAC system

- ➢ **The auxiliary building HVAC system is a non-safety related system, with the exception of safety-related isolation dampers which isolate the penetration and the safeguard component areas, and the vent stack from the auxiliary building HVAC system.**
- ➢ **The auxiliary building HVAC system performs the following functions:**
  - ✓ Provide and maintain proper operating environment within the required temperature range for areas housing mechanical and electrical equipment within the A/B, R/B, PS/B and AC/B during normal plant operation.
  - ✓ Keep dose levels due to the airborne radioactivity in normally occupied areas below the allowable values.
  - ✓ Maintain a slightly negative pressure in the controlled areas relative to the outside atmosphere to minimize exfiltration from the radiological controlled areas.
  - ✓ Maintain airflow from areas of low radioactivity to areas of potentially higher radioactivity.

# 9.4.3 Auxiliary Building Ventilation System

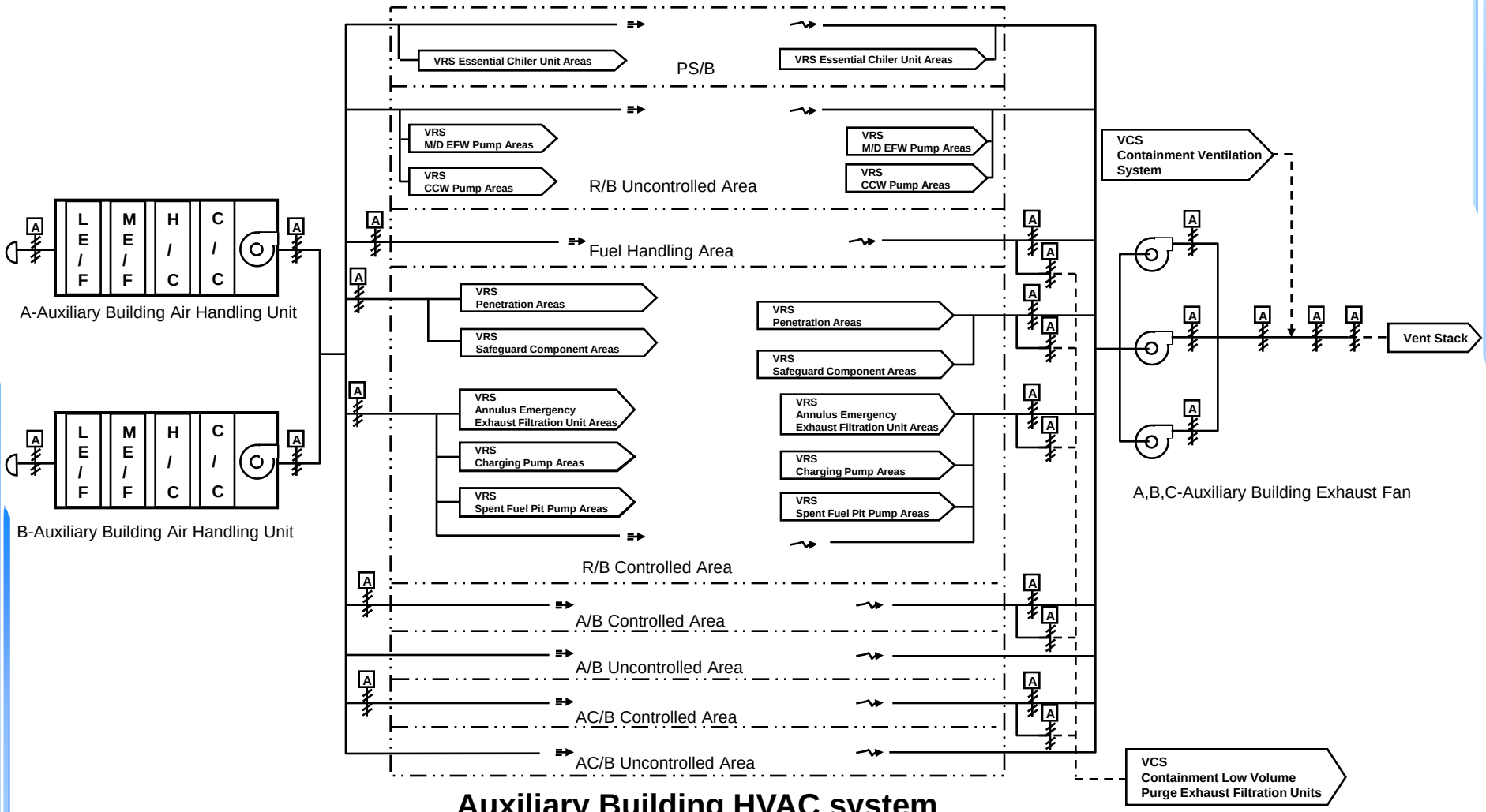


**Auxiliary Building HVAC system**

# 9.4.3 Auxiliary Building Ventilation System

- **The Non-Class 1E electrical room HVAC system is non-safety related system and performs the following function:**
  - ✓ Provide and maintain the room ambient conditions within the required temperature range to support the continuous operation of the electrical equipment and components.
  - ✓ Maintain the hydrogen concentration below 1% by volume of battery room.
- **The TSC HVAC system is non-safety related system and performs the following functions:**
  - ✓ Exclude entry of airborne radioactivity into the TSC envelope and remove radioactive material from the TSC envelope environment.
  - ✓ Provide and maintain proper environmental conditions within the required temperature range to assure personnel comfort and to support the operation of the control and instrumentation equipment and components.
  - ✓ Support and maintain TSC habitability and permit personnel occupancy following plant emergency conditions.
- **The Main steam/feedwater piping area HVAC system is a non-safety related system.**
  - ✓ Provide and maintain proper environmental conditions within the required temperature range suitable to support the operation and assure the reliability of the electrical and mechanical components.

# 9.4.3 Auxiliary Building Ventilation System

## ➢ Open Items and Confirmatory Items

| RAI No. | Question 09.04.03-X | RAI Topic / NRC Concern | RAI Response / DCD Impact |
|---|---|---|---|
| 831-6030 | 17 | Open Item 09.04.03-17<br><br>Provide additional justification for not including the ABVS function to provide dilution flow in support of the GWMS in Tier 1. | ➢MHI provided:<br>✓The existing Tier 1 descriptions and ITAAC verify functional arrangement of ABVS to support the dilution flow function and are consistent with SRP 14.3 guidance and RIS 2008-05 guidance for Tier 1 content. |

# 9.4.3 Auxiliary Building Ventilation System

## ➢ Open Items and Confirmatory Items

| RAI No. | Question 09.04.03-X | RAI Topic / NRC Concern | RAI Response / DCD Impact |
|---|---|---|---|
| 831-6030 | 18 | Open Item 09.04.03-18<br><br>Clarify ITAAC Table 2.7.5.4-3 line item 10 to ensure ABVS exhaust flow greater than supply flow to maintain a negative pressure within the radiologically controlled areas. | ➢MHI provided:<br>✓Revised wording for the ITAAC to clarify that the design commitment is to maintain exhaust airflow greater than supply airflow to control the release of potentially radioactive materials from radiologically controlled areas, and the acceptance criteria is that two of three exhaust fans will be operating and that exhaust flowrate will be greater than supply flowrate. |

# 9.4.3 Auxiliary Building Ventilation System

## ➢ Open Items and Confirmatory Items

| RAI No. | Question 09.04.03-X | RAI Topic / NRC Concern | RAI Response / DCD Impact |
|---|---|---|---|
| 831-6030 | 19 | Open Item 09.04.03-19<br><br>Provide the description of the function of the ABVS exhaust flow damper to prevent backflow. Establish that the responsibility for ABVS flow balance testing and frequency is assigned to the COL applicant. | ➢MHI provided:<br>✓The description of the function of the ABVS exhaust flow damper to prevent backflow will be included in the DCD.<br>✓A COL applicant item for ABVS flow balance testing and frequency will be included in the DCD. |
| 831-6030 | 20 | Open Item 09.04.03-20<br><br>Provide a description of the check valve in the sump line between the TB sump and the A/B that prevents backflow to the TB. | ➢MHI provided:<br>✓The description of the check valve in the sump line between the TB sump and the A/B that prevents backflow to the TB will be included in the DCD and shown on the flow diagram. |

# 9.4.3 Auxiliary Building Ventilation System

## ➢ Open Items and Confirmatory Items

| RAI No. | Question 09.04.03-X | RAI Topic / NRC Concern | RAI Response / DCD Impact |
|---|---|---|---|
| 831-6030 | 21 | Open Item 09.04.03-21<br><br>Revise DCD Figure 9.4.3-1 (ABVS) to reflect the existence of backdraft dampers. | ➢MHI provided:<br>✓DCD Subsection 9.4.3.2.1 system description will be revised to describe the backdraft dampers. The description is broadly applicable and inclusive of auxiliary building HVAC system branch ducts supplying or exhausting uncontrolled areas that may not be shown on the simplified flow diagram. Therefore, it is not practical or necessary to show the backdraft dampers on DCD Figure 9.4.3-1. |

# 9.4.3 Auxiliary Building Ventilation System

## ➢ Open Items and Confirmatory Items

| RAI No. | Question 09.04.03-X | RAI Topic / NRC Concern | RAI Response / DCD Impact |
|---|---|---|---|
| 355-2942 | 3 | <u>Confirmatory Item 09.04.03-3</u><br><br>Revise the DCD to reflect the existence of ABVS backdraft dampers. | ➢MHI provided:<br>✓DCD Subsection 9.4.3.2.1 system description will be revised to describe the backdraft dampers to support closure of this item. |

# 9.4.4 Turbine Building Area Ventilation System

- The Turbine Building Area Ventilation System (T/B HVAC) is a non safety related system.
- The T/B area is not expected to include airborn radioactive contamination. No safety related SSCs are in T/B.
- The T/B HVAC maintain a suitable environment for the operation of equipment in the turbine building.

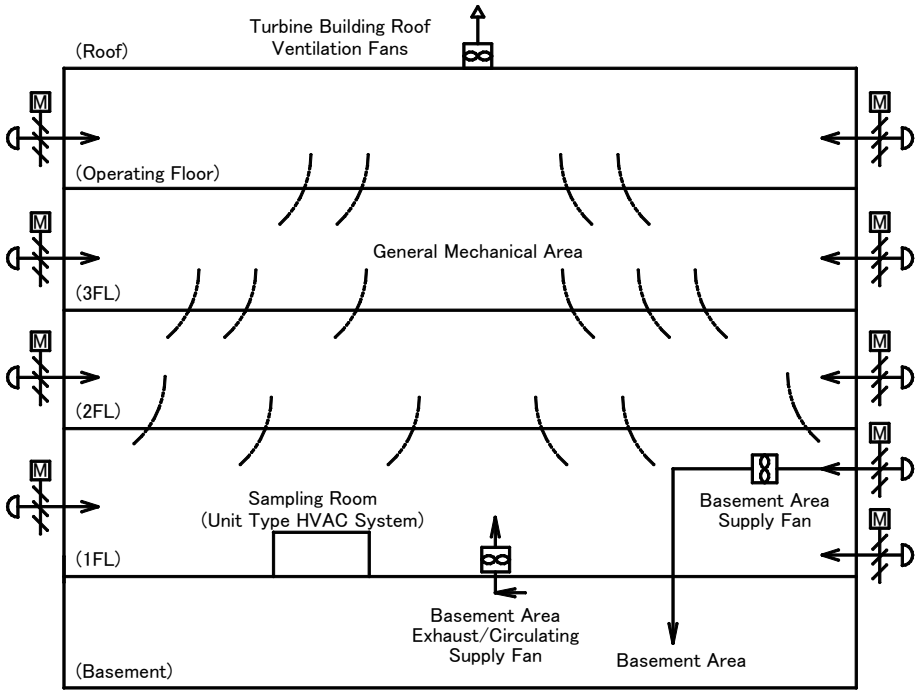


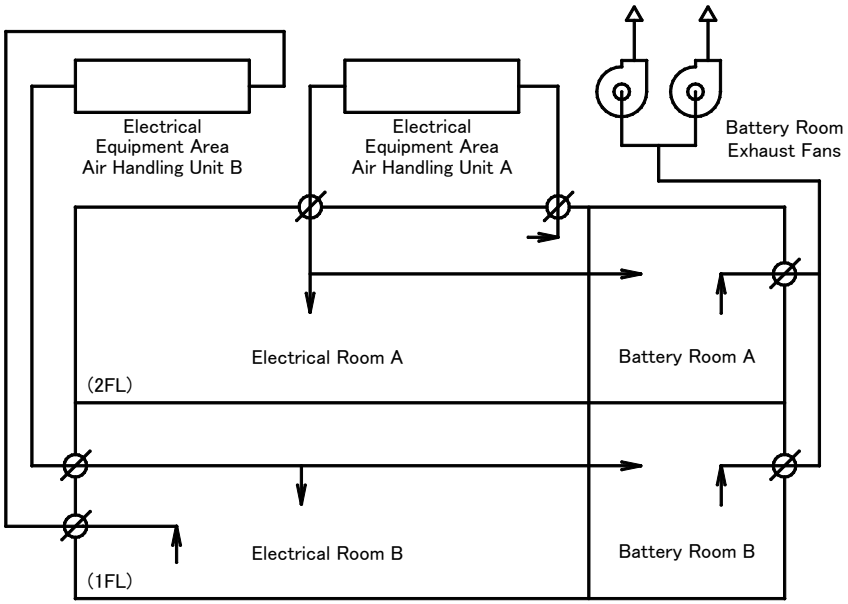

# 9.4.4 Turbine Building Area Ventilation System

## ➢ Open Items and Confirmatory Items

| RAI No. | Question 09.04.04-X | RAI Topic / NRC Concern | RAI Response / DCD Impact |
|---|---|---|---|
| 586-4690 | 6 | To explain how GDC2 is not applicable, the DCD states that safety-related equipment is not located in the T/B. This commitment must be expanded to "Important to Safety" equipment.<br><br>According to Appendix 3D of DCD Ch. 3, there are "Important to Safety" SSCs in T/B . | ➢ Draft response currently under development. |
| 713-5555 (follow-up) | 7 | | |
| 814-5943 (follow-up) | 8 | | |

# 9.4.5 Engineered Safety Feature (ESF) Ventilation System

- **The ESF Ventilation System is a safety related system and includes the following sub-systems:**
  - ✓ Annulus Emergency Exhaust System
  - ✓ Class 1E Electrical Room HVAC System
  - ✓ Safeguard Component Area HVAC System
  - ✓ Emergency Feedwater Pump Area HVAC System
  - ✓ Safety Related Component Area HVAC System

# 9.4.5 Engineered Safety Feature (ESF) Ventilation System

- **Annulus Emergency Exhaust System performs the following function:**
  - ✓ Remove and retain fission products by filtering the air that is exhausted from the penetration areas and safeguard component areas following an accident.

- **Class 1E Electrical Room HVAC System performs the following functions:**
  - ✓ Maintain proper operating environmental conditions within Class 1E electrical rooms.
  - ✓ Maintain the hydrogen concentration below 1% by volume in the Class 1E battery room.

- **Other subsystems of the ESF ventilation system provide the proper environmental conditions within plant areas that house engineered safety features equipment.**

# 9.4.5 Engineered Safety Feature (ESF) Ventilation System

## Annulus Emergency Exhaust System

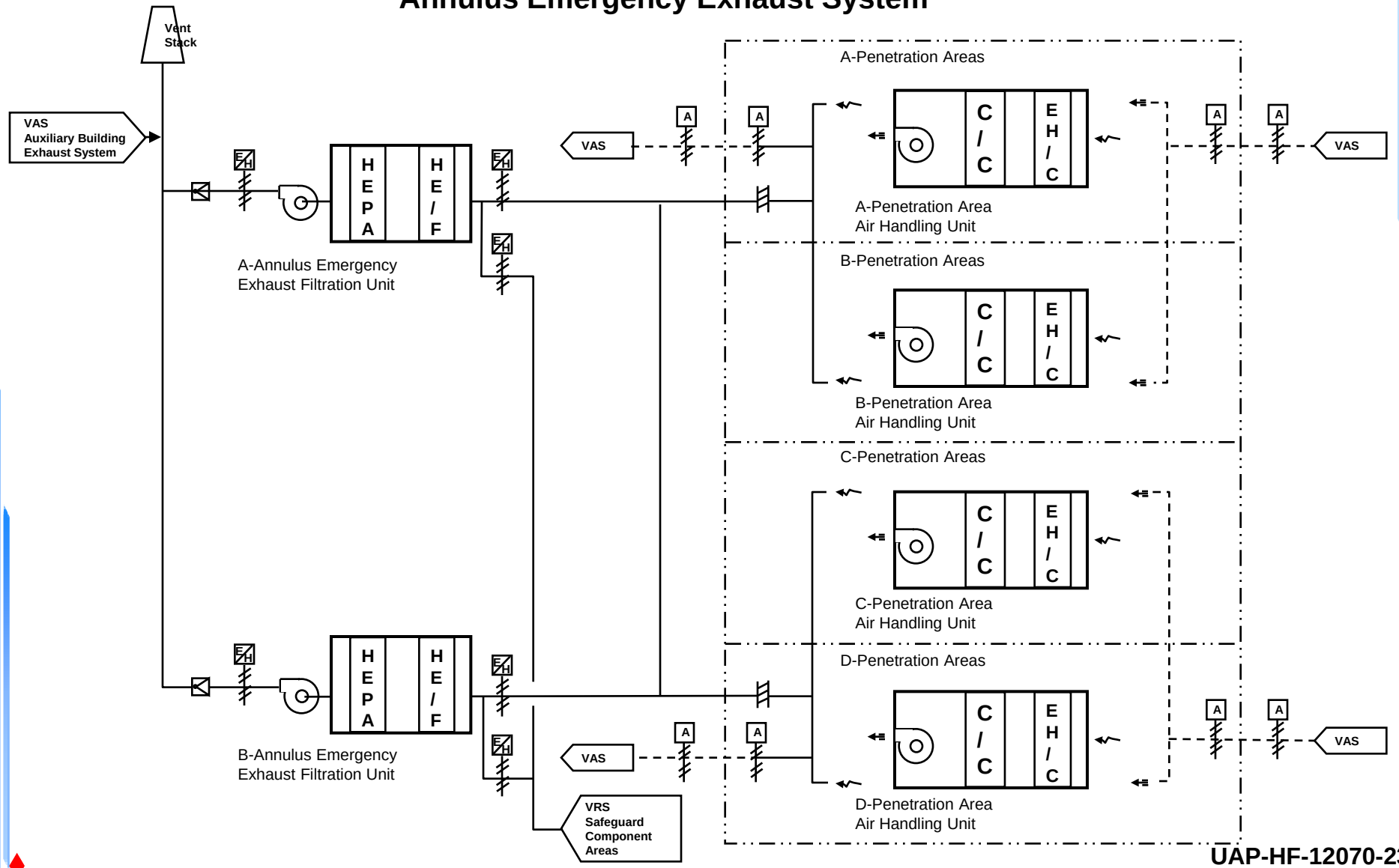

# 9.4.5 Engineered Safety Feature (ESF) Ventilation System

## Class 1E Electrical Room HVAC System

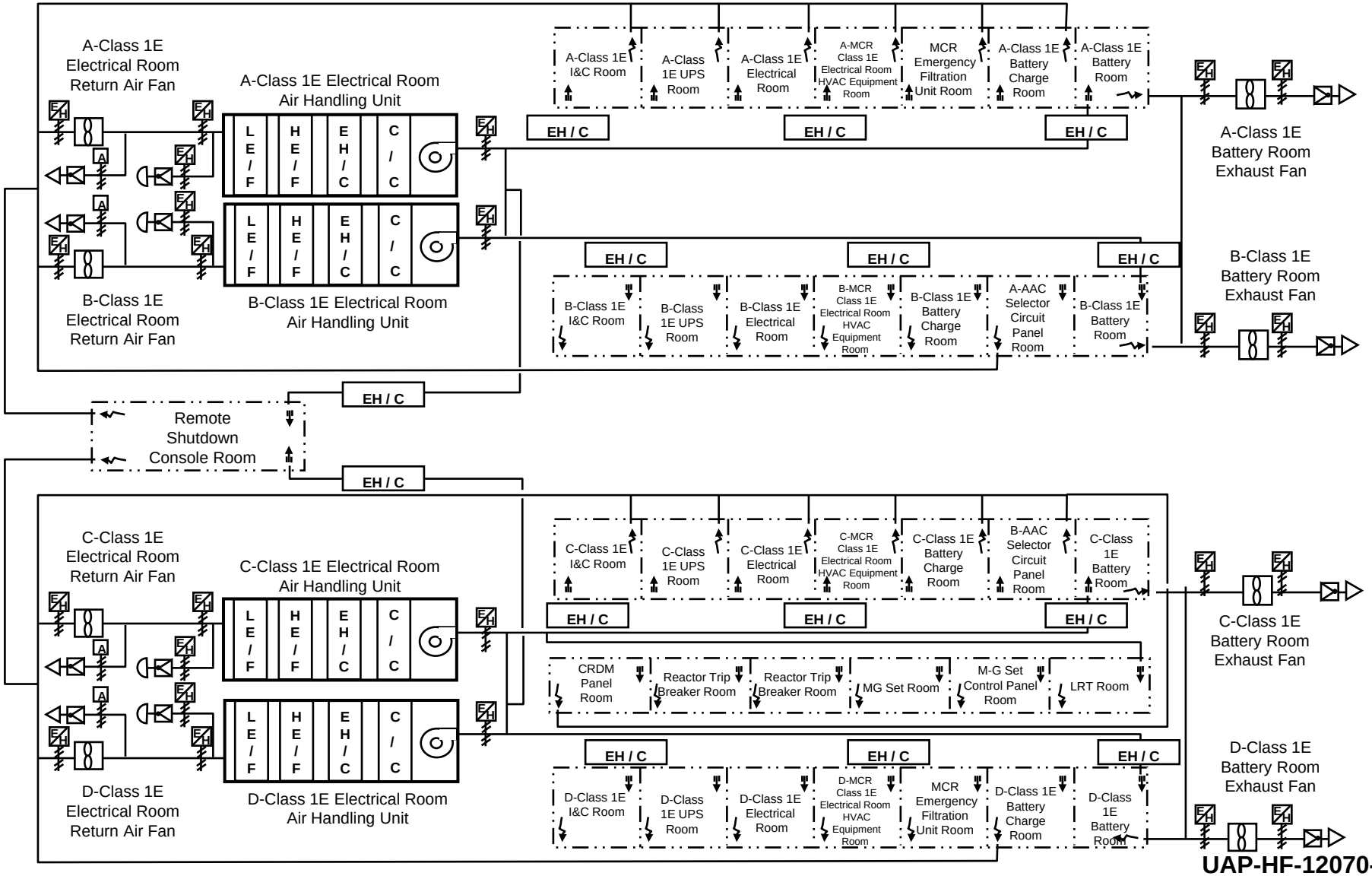

# 9.4.5 Engineered Safety Feature (ESF) Ventilation System

## ➢ Open Items and Confirmatory Items

| RAI No. | Question 09.04.05-X | RAI Topic / NRC Concern | RAI Response / DCD Impact |
|---|---|---|---|
| 825-5999 | 20 | Open Item 09.04.05-20<br><br>Provide the revision to ITAAC Table 2.7.5.2-3 as committed in response to RAI 474-3811, Question 09.04.05-10. | ➢MHI provided:<br>✓As part of the implementation of RIS 2008-05 guidance for Tier 1 ITAAC, MHI determined that portions of the committed changes to ITAAC Table 2.7.5.2-3 were not appropriate since those additions were not credited in accident analyses and were not key functions. |

# 9.4.5 Engineered Safety Feature (ESF) Ventilation System

## ➢ Open Items and Confirmatory Items

| RAI No. | Question 09.04.05-X | RAI Topic / NRC Concern | RAI Response / DCD Impact |
|---|---|---|---|
| 670-4773 | 18 | Confirmatory Item 09.04.05-18<br><br>Provide a correction to the response to RAI 64-735, Question 9.4.5-18 related to battery hydrogen generation during discharge. | ➢MHI will provide an amended response to RAI 64-735, Question 9.4.5-18 to support closure of this item. |
| 825-5999 | 21 | Confirmatory Item 09.04.05-21<br><br>Provide a reference to technical report MUAP-10020 (HVAC Calculations) in DCD Section 6.5.7. | ➢As described in the response to the RAI, MHI intends to revise the reference to MUAP-10020 in the next revision of the DCD to support closure of this confirmatory item. |

# 9.4.6 Containment Ventilation System

- **The Containment Ventilation System is a non-safety related system, with the exception of piping and valves between and including containment isolation valves, and includes the following sub-systems:**
  - ✓ Containment Fan Cooler System
  - ✓ Control Rod Drive Mechanism (CRDM) Cooling System
  - ✓ Reactor Cavity Cooling System
  - ✓ Containment Purge System
- **Containment Fan Cooler System performs the following function:**
  - ✓ Maintain proper environmental conditions in containment during normal plant operation and LOOP condition.
- **CRDM Cooling System performs the following function:**
  - ✓ Remove the heat dissipated by the CRDMs.
- **Reactor Cavity Cooling System performs the following functions:**
  - ✓ Remove the heat dissipated by the reactor vessel, the reactor vessel support structure, and the gamma radiation and fast neutron bombardment on the primary shield wall.
  - ✓ Provide adequate cooling for the primary shield and the reactor vessel support base plates to prevent concrete dehydration.

# 9.4.6 Containment Ventilation System

- **Containment Purge System includes the following sub-systems:**
  - ✓ Containment low volume purge system
  - ✓ Containment high volume purge system
- **Containment Low Volume Purge System performs the following functions:**
  - ✓ Minimize the potential spread of radioactive contamination from the areas serviced by the auxiliary building HVAC system.
  - ✓ Provide relief from pressure build-up within containment caused by instrument air leakage and containment temperature fluctuations.
- **Containment High Volume Purge System performs the following function:**
  - ✓ Maintain low concentrations of radioactivity in the containment atmosphere to allow access during maintenance and inspection activities

# 9.4.6 Containment Ventilation System

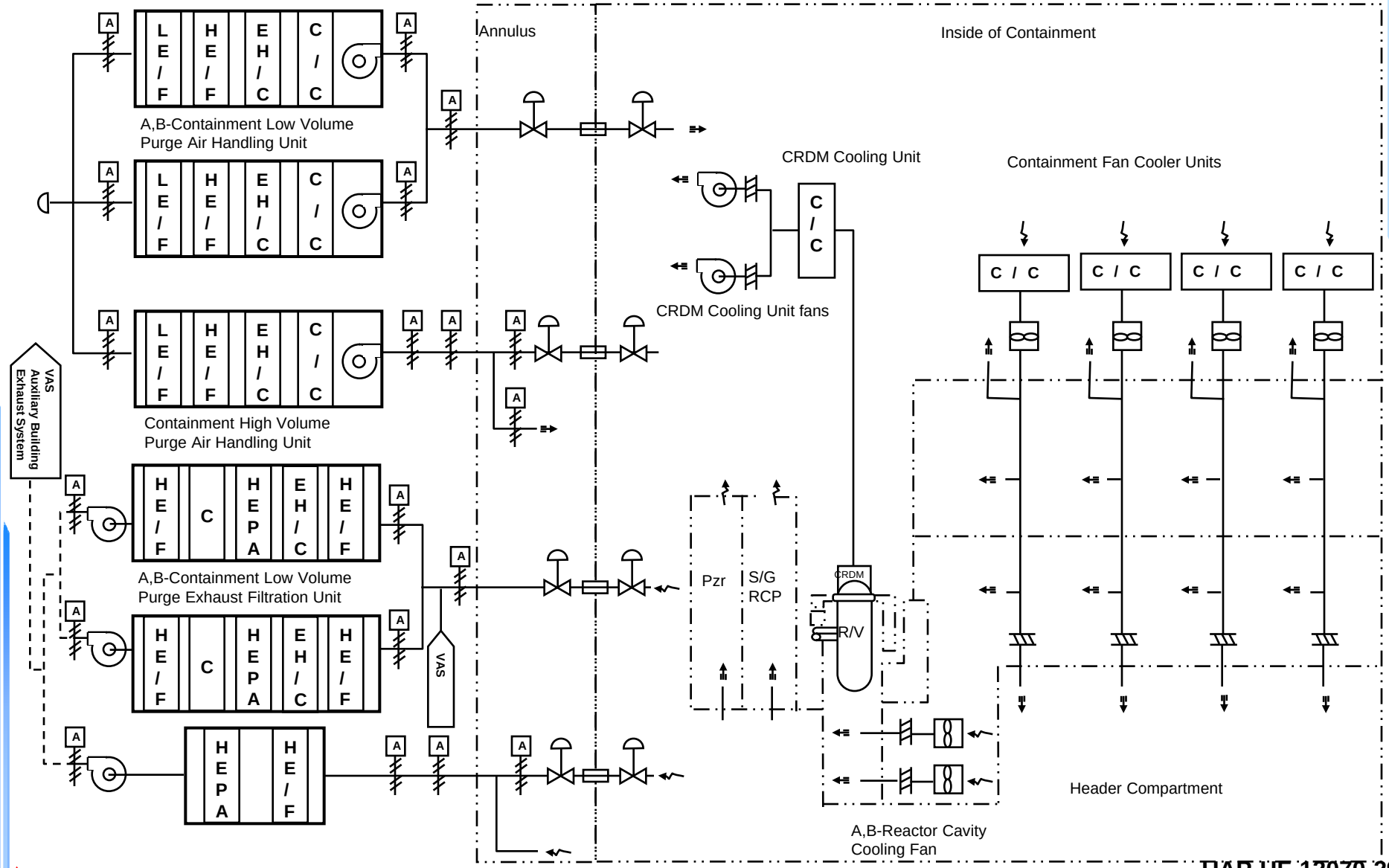

# 9.4.6 Containment Ventilation System

## ➢ Open Items and Confirmatory Items

| RAI No. | Question 09.04.06-X | RAI Topic / NRC Concern | RAI Response / DCD Impact |
|---|---|---|---|
| 826-6014 | 06.05.01-22 | Open Item 06.05.01-22:<br><br>Provide ITAAC to demonstrate that as-built fire dampers fully close under system design flow rates. | ➢MHI provided:<br>✓The fire dampers are designed and installed so that the air velocity in the ducts assists in closing and does not preclude proper damper closure per NFPA requirements. Therefore no testing for closure under design flow rates is required. |
| 826-6014 | 06.05.01-21 | Confirmatory Item 06.05.01-21:<br><br>Amend DCD Subsection 14.2.12.1.66 to resolve inconsistencies as committed to in response to question 06.05.01-14. | ➢MHI provided:<br>✓DCD Subsection 14.2.12.1.66 will be revised as committed in response to 06.05.01-14 to support closure of this item. |

# Presentation to ACRS Subcommittee

## Chapter 9: Auxiliary Systems

## **Section 9.5 Other Auxiliary Systems**

March 22-23, 2012

Mitsubishi Heavy Industries, Ltd.

# MHI Presenters

**James Curry, Ph.D., P.E., – Lead Presenter**
***Mitsubishi Nuclear Energy Systems, Inc.***

**Ronald Reynolds – Lead Presenter**
**Mitsubishi Nuclear Energy Systems, Inc.**

***Keita Otani – Technical Expert***
***Mitsubishi Heavy Industries, Ltd.***
***Chapter 9 Engineer***

***Hideki Tanaka – Technical Expert***
***Advanced Energy America, LLC.***

# Acronyms (1/1)

| | |
|---|---|
| EOF | :Offsite Emergency Operations Facility |
| FHA | :Fire Hazard Analysis |
| FOS | :Fuel Oil Storage and Transfer System |
| GTG | :Gas Turbine Generator |
| IESNA | :Illuminating Engineering Society of North America |
| LOOP | :Loss of Offsite Power |
| MCR | :Main Control Room |
| PABX | :Private Automatic Branch Telephone Exchange |
| PS/B | :Power Source Building |
| RSC | :Remote Shutdown Console |
| RG | :Regulatory Guide |
| SBO | :Station Blackout |
| SRP | :Standard Review Plan |
| SSC | :Structures, Systems, and Components |
| TSC | :Technical Support Center |
| UPS | :Uninterruptible Power Supply |

# DCD Section 9.5 Other Auxiliary Systems

| Section | | Major Contents | Safety-Related function |
|---|---|---|---|
| 9.5 | Other Auxiliary Systems | 9.5.1 Fire Protection Program | No |
| | | 9.5.2 Communication Systems | No |
| | | 9.5.3 Lighting Systems | No |
| | | 9.5.4 Gas Turbine Generator Fuel Oil Storage and Transfer System | Yes |
| | | 9.5.5 Gas Turbine Generator Cooling Water System [Not Required] | Yes |
| | | 9.5.6 Gas Turbine Generator Starting System | Yes |
| | | 9.5.7 Gas Turbine Lubrication System | Yes |
| | | 9.5.8 GTG Combustion Air Intake, Turbine Exhaust, Room Air Supply, and Air Exhaust Systems | Yes |

# 9.5.1 Fire Protection Program

- **Primary objectives of fire protection program:**
  - ✓ Minimize the potential for fires and explosions to occur.
  - ✓ Rapidly detect, control, and extinguish any fires that do occur.
  - ✓ Assure that any fire that is not promptly extinguished by the fire suppression system will not prevent safe-shutdown of the plant and will minimize the potential for radioactive releases to the environment.

- **Fire Protection Program describes:**
  - ✓ Defense-in-depth approach
  - ✓ Overall fire protection program for facility.
  - ✓ Positions and responsibilities for the program.
  - ✓ Manual and automatic detection and suppression systems
  - ✓ Administrative controls.
  - ✓ That the COL Applicant is responsible for providing site-specific information and a schedule for implementation.

# 9.5.1 Fire Protection Program

- **Fire protection design features include the following functions:**
  - ✓ Prevent fire initiation by controlling, separating, and limiting the quantities of combustibles and sources of ignition.
  - ✓ Isolate combustible materials and limit the spread of fire by subdividing plant structures into fire areas separated by fire barriers and further separate fire areas into fire zones.
  - ✓ Separate redundant safe-shutdown components and associated electrical divisions by 3-hour rated fire barriers to preserve the capability to achieve and maintain safe shutdown of the plant following a fire.
  - ✓ Preserve the capability to achieve and maintain safe shutdown of the plant using controls external to the main control room (MCR), should a fire require evacuation of the MCR or damage the MCR circuitry for safe-shutdown systems.
  - ✓ Separate redundant trains of safety-related equipment used to mitigate the consequences of a design basis accident.

# 9.5.1 Fire Protection Program

- **Fire protection systems are designed to:**
  - ✓ Detect and locate fires and provide operator indication of the location.
  - ✓ Provide the capability to extinguish fires in any plant area, to protect site personnel, limit fire damage, and enhance safe-shutdown capabilities.
  - ✓ Supply fire suppression water at a sufficient flow rate and pressure in accordance with NFPA codes.
  - ✓ Maintain 100% design capacity of fire pump, assuming failure of one fire pump or the loss of offsite power (LOOP). Design includes one electric and one diesel-driven fire pump.
  - ✓ The fire protection system is non-safety related with the exception of piping between and including containment isolation valves
  - ✓ Seismic design requirements are applied to portions of the system located in areas containing equipment required for safe-shutdown following a safe-shutdown earthquake (SSE).

# 9.5.1 Fire Protection Program

- **Fire Hazard Analysis (FHA) for US-APWR standard plant**
  - ✓ The purpose of the FHA is to:
    - Evaluate potential in-situ and transient fire and explosion hazards.
    - Define fire barrier locations
    - Identify detection and suppression coverage throughout the plant
    - Confirm that the effects of a fire in any location in the plant do not adversely impact the ability to safely shut down the reactor and that the release of radioactivity to the environment is controlled and minimized.
    - Select appropriate measures for fire prevention, fire detection, fire suppression, and fire containment for each fire area containing structures, systems, and components (SSCs) important to safety in accordance with NRC guidelines and regulations.
  - ✓ The FHA is performed for areas of the plant containing safety-related components and for areas containing systems important to the generation of electricity. The FHA is performed on a fire area by fire area basis with combustible loads identified by fire zone. This approach provides confidence that plant safety is achieved and the intent of fire protection program requirements are satisfied.

# 9.5.2 Communication Systems

- The Communication systems consist of:
  - ✓ Public address system/page
  - ✓ Telephone system
  - ✓ Sound powered telephone system
  - ✓ Plant radio system
  - ✓ Offsite communication system including emergency communication systems
- The means exists for communication between the MCR and TSC and from the MCR and TSC to Offsite Emergency Operations Facility (EOF), principal state and local emergency operations centers, and radiological field assessment teams.
- The means exist for communication from the MCR, TSC, and EOF to the NRC headquarters and regional emergency operations centers.

# 9.5.2 Communication Systems

## ➢ Major RAIs (Confirmatory Items)

| RAI No. | Question 09.05.02-X | RAI Topic / NRC Concern | RAI Response / DCD Impact |
|---|---|---|---|
| 859-6105 | 11 | Confirmatory Item 9.5.2-1:<br><br>DCD Tier 2, Section 13.3 became specific on details concerning telecommunication in the Technical Support Center (TSC) by stating that, “Ample working areas for all personnel as described in section 9.5.2.” However, DCD Tier 2, Section 9.5.2, does not address “ample working areas.” | ➢ MHI previously provided:<br>✓ The phrase was meant to say “Plant communications systems are described in Subsection 9.5.2” and states the correction would be made in the next DCD revision. |

# 9.5.3 Lighting Systems

- **The lighting system consists of:**
  - ✓ Normal lighting: All indoor and outdoor areas
  - ✓ Emergency lighting
    - Class 1E emergency lighting: Safe shutdown operation area
    - Self-contained battery pack emergency lighting: Emergency operation area, safe ingress and egress route of personnel during emergencies
    - Normal/emergency lighting: All indoor plant area except the MCR and RSC room
- **The lighting system is supplied from:**
  - ✓ Normal lighting: Non-Class 1E power system
  - ✓ Emergency lighting
    - Class 1E emergency lighting: Class 1E power system
    - Self-contained battery pack emergency lighting: Class 1E power system or Non-Class 1E power system, as applicable
    - Normal/emergency lighting: Non-Class 1E power system, backed up by alternate ac power source

# 9.5.3 Lighting Systems

## ➢ Major RAIs (Open and Confirmatory Items)

| RAI No. | Question 09.05.03-X | RAI Topic / NRC Concern | RAI Response / DCD Impact |
|---|---|---|---|
| | | None | |

# 9.5.4 GTG Fuel Oil Storage and Transfer System

## ➢ Design Features

✓ Each GTG FOS is composed of

1) One fuel oil storage tank
2) Two fuel oil transfer pumps
3) One fuel oil day tank
4) One fuel filling port
5) Vent piping from both the fuel oil storage tank and the day tank
6) Piping and Valves
7) Instrumentation and Control

✓ Capacity

- Fuel oil storage tank : 7 days
- Fuel oil day tank : 1.5 hours

# 9.5.4 GTG Fuel Oil Storage and Transfer System

## ➢ System Configuration

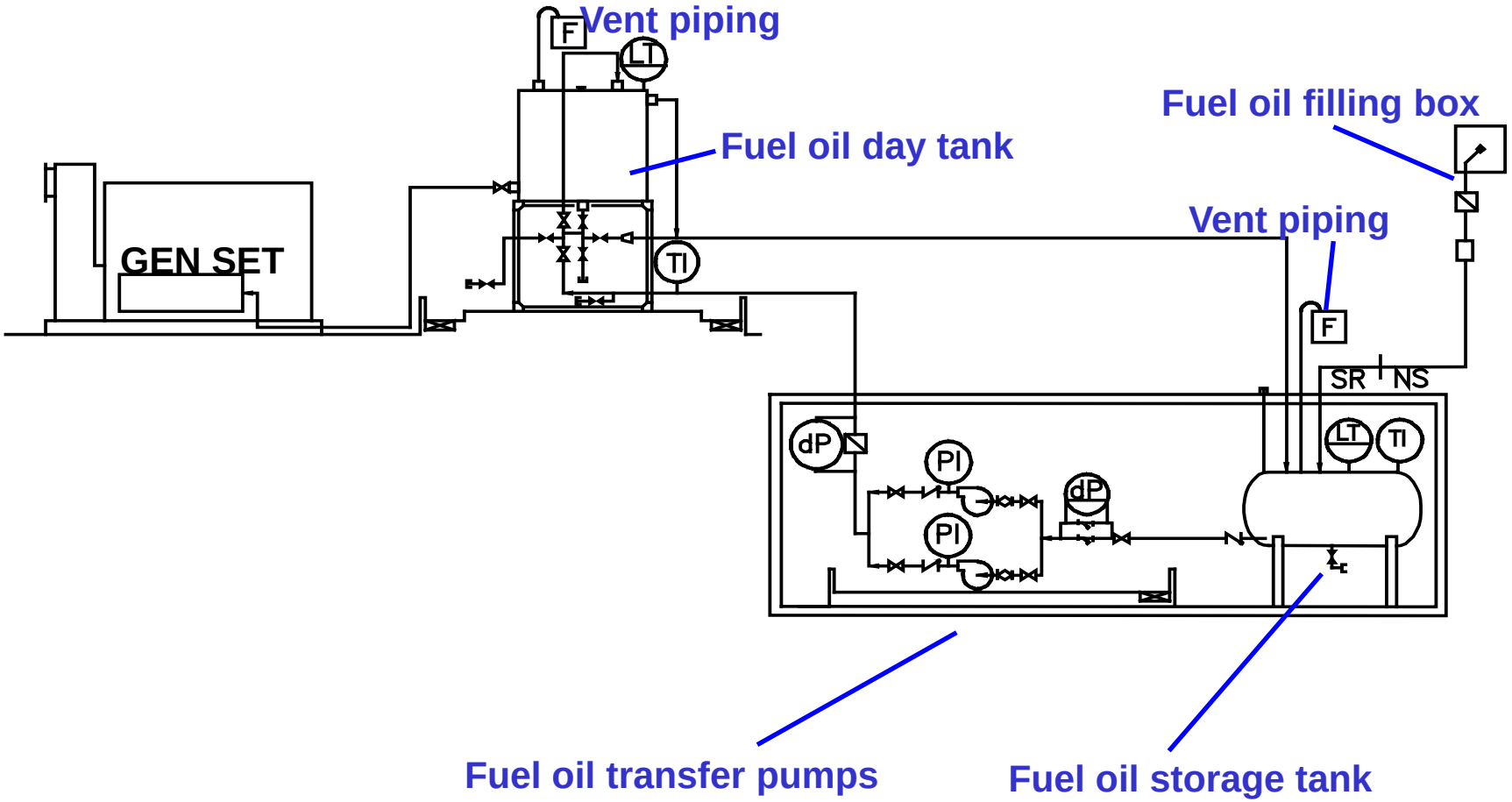

# 9.5.4 GTG Fuel Oil Storage and Transfer System

## ➢ Major RAIs (Open Items)

| RAI No. | Question | RAI Topic / NRC Concern | RAI Response / DCD Impact |
|---|---|---|---|
| 468-3360 | 9.5.4-49 | To add standard for the design of gas turbines "ISO3977 part 3, 2004"<br>**[Open Item 9.5.4-1]** | ➢ This standard includes requirements which are applied to continuous operating type GTG and not appropriate for emergency/back-up type GTG.<br>➢ MHI will identify whether there are some deviations from this standard and make an exception for the emergency GTG support systems. |

# 9.5.4 GTG Fuel Oil Storage and Transfer System

## ➢ Major RAIs (Confirmatory Items)

| RAI No. | Question | RAI Topic / NRC Concern | RAI Response / DCD Impact |
|---|---|---|---|
| 754-5617 | 14.3.6-20 | -Section2.6.4.1, Item 12.b Rev. 3 of Tier 1 of US-APWR DCD should similarly make it clear that each Class 1E EPS train is located in a separate room of the PS/B.<br>**[Confirmatory Item 9.5.4-1]** | ➢ MHI provided:<br>Each redundant division of Class 1E EPSs is located in a separate room of the PS/B.<br>The corresponding ITAAC Acceptance Criteria and Section 2.6.4.1 will be similarly revised. |

# 9.5.6 GTG Starting System

## Design Features

- ✓ Starting time
  - Less than 100 seconds
- ✓ Starting system
  - Compressed air system
- ✓ Starting Air Capacity
  - Three consecutive GTG starts (without compressor assistance)
- ✓ Each GTG starting system is composed of
  1) Six air compressors with an air cooler
  2) Three drain chambers
  3) Two air receivers
  4) Two air starting units

# 9.5.6 GTG Starting System

## ➢ System Configuration

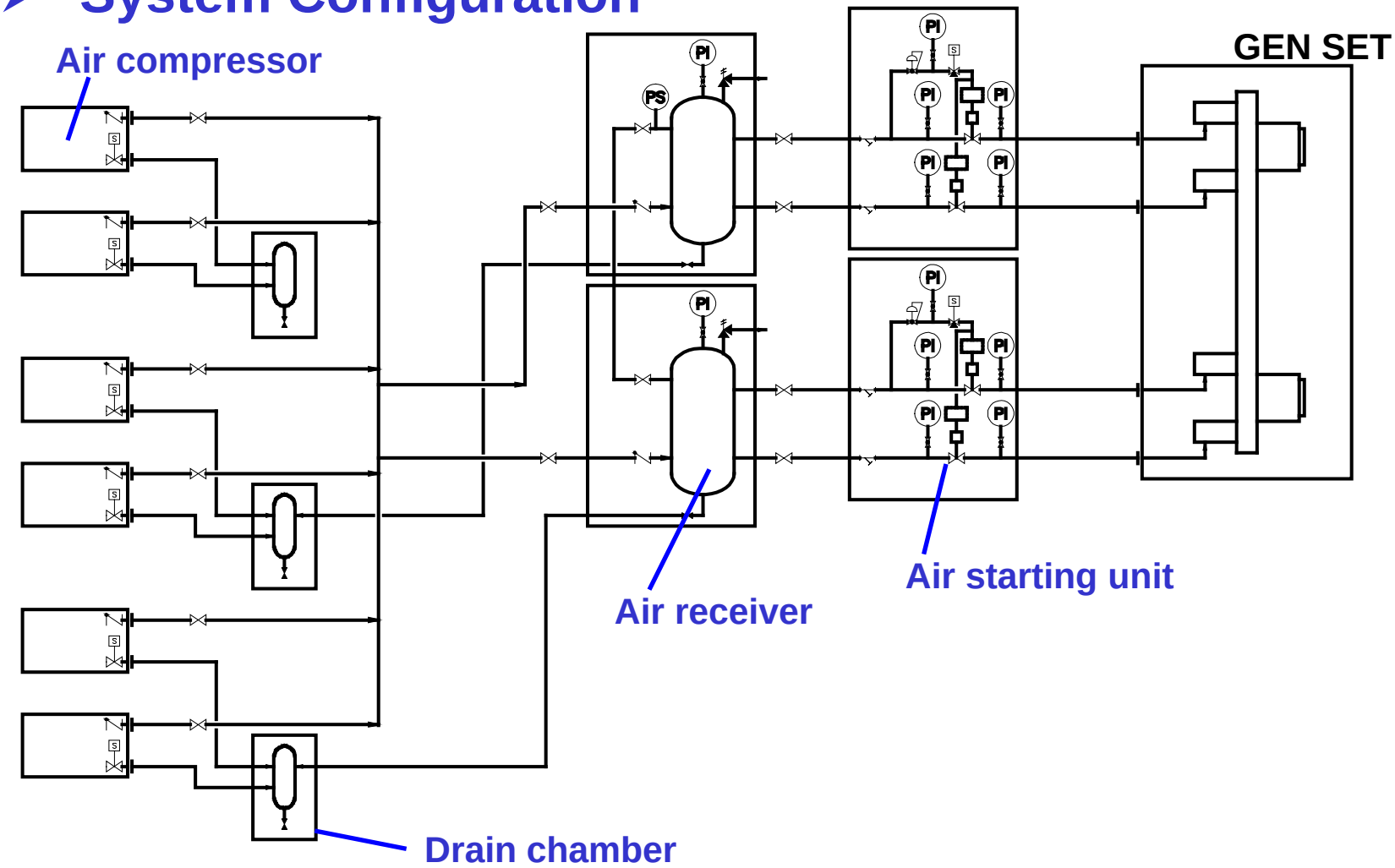

# 9.5.6 GTG Starting System

## ➢ Major RAIs (Confirmatory Items)

| RAI No. | Question | RAI Topic / NRC Concern | RAI Response / DCD Impact |
|---|---|---|---|
| 319-2147 | 9.5.6-20 | -The air starting system air receivers should be in accordance with ASME Section III, Class 3.<br>-"Qualification and Test Plan of Class 1E Gas Turbine Generator System," December 2007, states in accordance with ASME Section VIII.<br>**[Confirmatory Item 9.5.6-1]** | ➢ MHI provided:<br>Air receivers are designed to not ASME Section VIII but ASME Section III, Class 3. |
| 754-5617 | 14.3.6-28 | -Rev. 3 of US-APWR DCD Tier1 Table 2.6.4-2, the starting air system are ASME Section III, Class3 from discharge of the air compressors through air starter at the GTG.<br>- DCD Tier 2 Figure 9.5.6-1 (Rev 2) state non safety-related up to the inlet check valve of air receiver.<br>**[Confirmatory Item 9.5.6-2]** | ➢ MHI provided:<br>Revising Tier 1, Table 2.6.4-2 to be consistent with Figure 9.5.6-1. |

# 9.5.6 GTG Starting System

## ➢ Major RAIs (Confirmatory Items)

| RAI No. | Question | RAI Topic / NRC Concern | RAI Response / DCD Impact |
|---|---|---|---|
| 319-2147 | 9.5.6-22 | -"Qualification and Test Plan of Class 1E Gas Turbine Generator System," December 2007, indicates that pipes from air tanks to the generator set shall be zinc coated.<br>-DCD Tier 2 Table 9.5.6-1 indicates that piping will be stainless steel and carbon steel.<br>**[Confirmatory Item 9.5.6-3]** | ➢ MHI provided:<br>The zinc coated piping is not applied. |
| 754-5617 | 14.3.6-24 | -Rev. 3 of US-APWR DCD, Table 2.6.4-1, Item 19 addresses the functional arrangements of the fuel oil storage and transfer system and the ventilation/cooling air intake and exhaust system.<br>-There is no similar item in Section 2.6.4.1 for the lube oil and starting air system.<br>**[Confirmatory Item 9.5.6-4]** | ➢ MHI provided:<br>US-APWR DCD Rev. 3 Section 2.6.4.2 Design Description 19 and corresponding Table2.6.4-1 ITAAC #19 will be revised to verify GTG compressed air starting system configuration. |

# 9.5.7 Gas Turbine Lubrication System

## ➢ Design Features

- ✓ The lubrication systems are composed of
  1) Two GT shaft drive pumps
  2) One reduction gear box (Oil Reservoir)
  3) Suction strainer at each oil pump suction line
  4) One full flow filter
  5) One lube oil cooler for each pump
  6) Oil cooler fan for each oil cooler
  7) Valves, piping and instrumentation
- ✓ All components of the system are contained in GTG enclosure.
- ✓ Keep-warm system is not installed, since lube oil performs under cold condition

# 9.5.7 Gas Turbine Lubrication System

## ➢ System Configuration

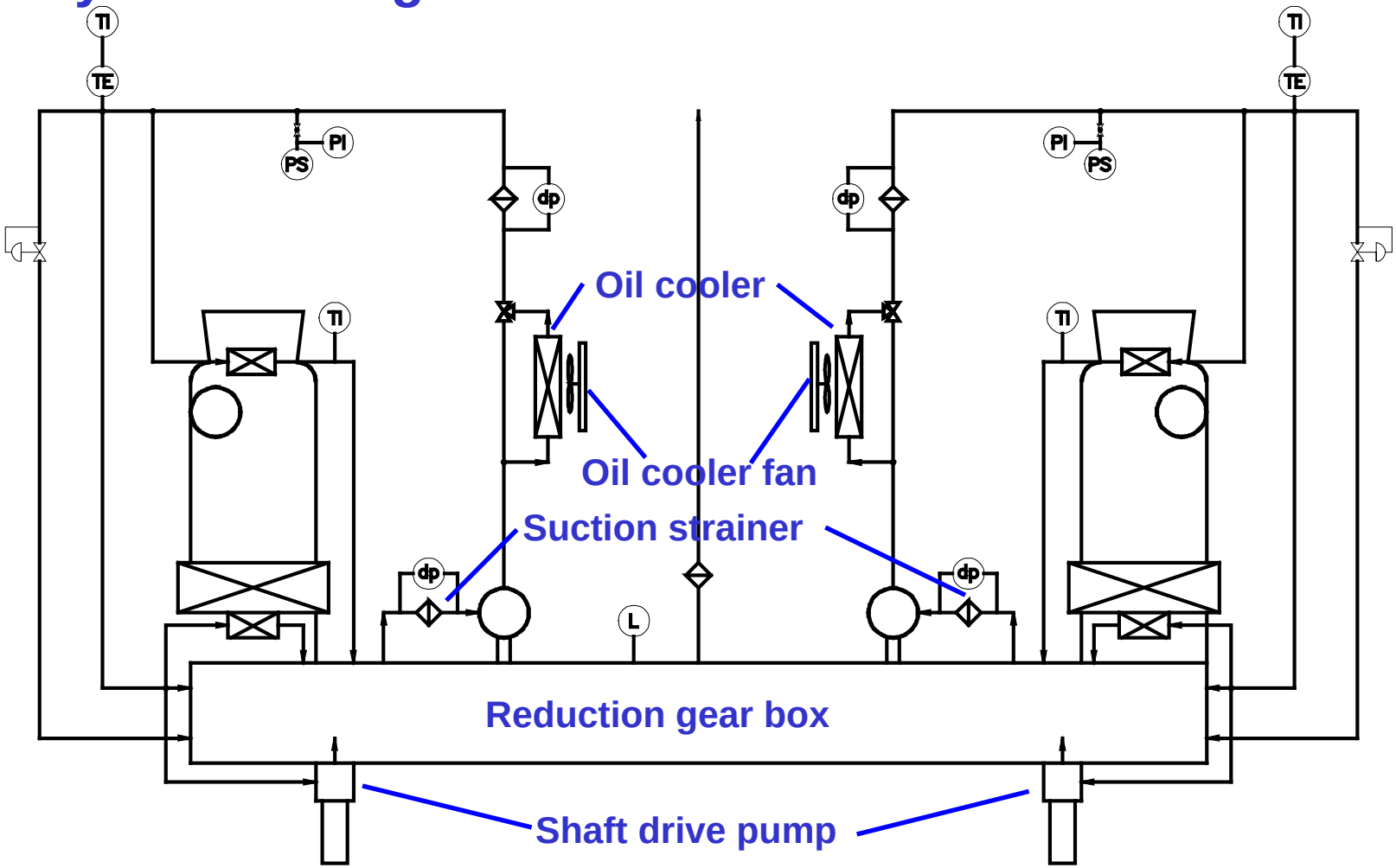

# 9.5.7 Gas Turbine Lubrication System

## ➢ Major RAIs (Confirmatory Items)

| RAI No. | Question | RAI Topic / NRC Concern | RAI Response / DCD Impact |
|---|---|---|---|
| 754-5617 | 14.3.6-23 | -Rev. 3 of US-APWR DCD, Table 2.6.4-1, Item 16 – The AC for the ITAAC should require that the as-built protection system are automatically bypassed when the Class 1E EPS is started by an ECCS actuation signal. **[Confirmatory Item 9.5.7-1]** | ➢ MHI provided: US-APWR DCD Revision 3 Section 2.6.4.1 Design Description 16 and corresponding Table 2.6.4-1 ITAAC #16 will be revised to specify the automatic bypass feature. |
| 754-5617 | 14.3.6-26 | -Rev. 3 of US-APWR DCD, Table 2.6.4-1, Item 30 – This ITAAC should require that the oil capacity verified is based on the maximum expected oil consumption rate, e.g., just prior to a scheduled overhaul. **[Confirmatory Item 9.5.7-2]** | ➢ MHI provided: US-APWR DCD Revision 3 Tier 1, Section 2.6.4.3 Design Description 30 and Table 2.6.4-1 ITAAC #30 will be revised to specify the lubricating oil consumption rate for calculating lubrication oil tank capacity (e.g., maximum expected oil consumption rate immediately prior to scheduled overhaul). |

## Design Features

- ✓ Capable of supplying combustion air and providing for exhaust
  - Continuous operation of the GTGs at 110% rating output

- ✓ A combustion air intake and exhaust system consists of
  1) Air intake screen
  2) Air exhaust weather louver and screen
  3) Silencer
  4) Ventilation fan (room air supply and air exhaust)
  5) Associated ductwork and flexible connections

# 9.5.8 GTG Combustion Air Intake, Turbine Exhaust Room Air Supply, and Air Exhaust System

## ➢ System Configuration

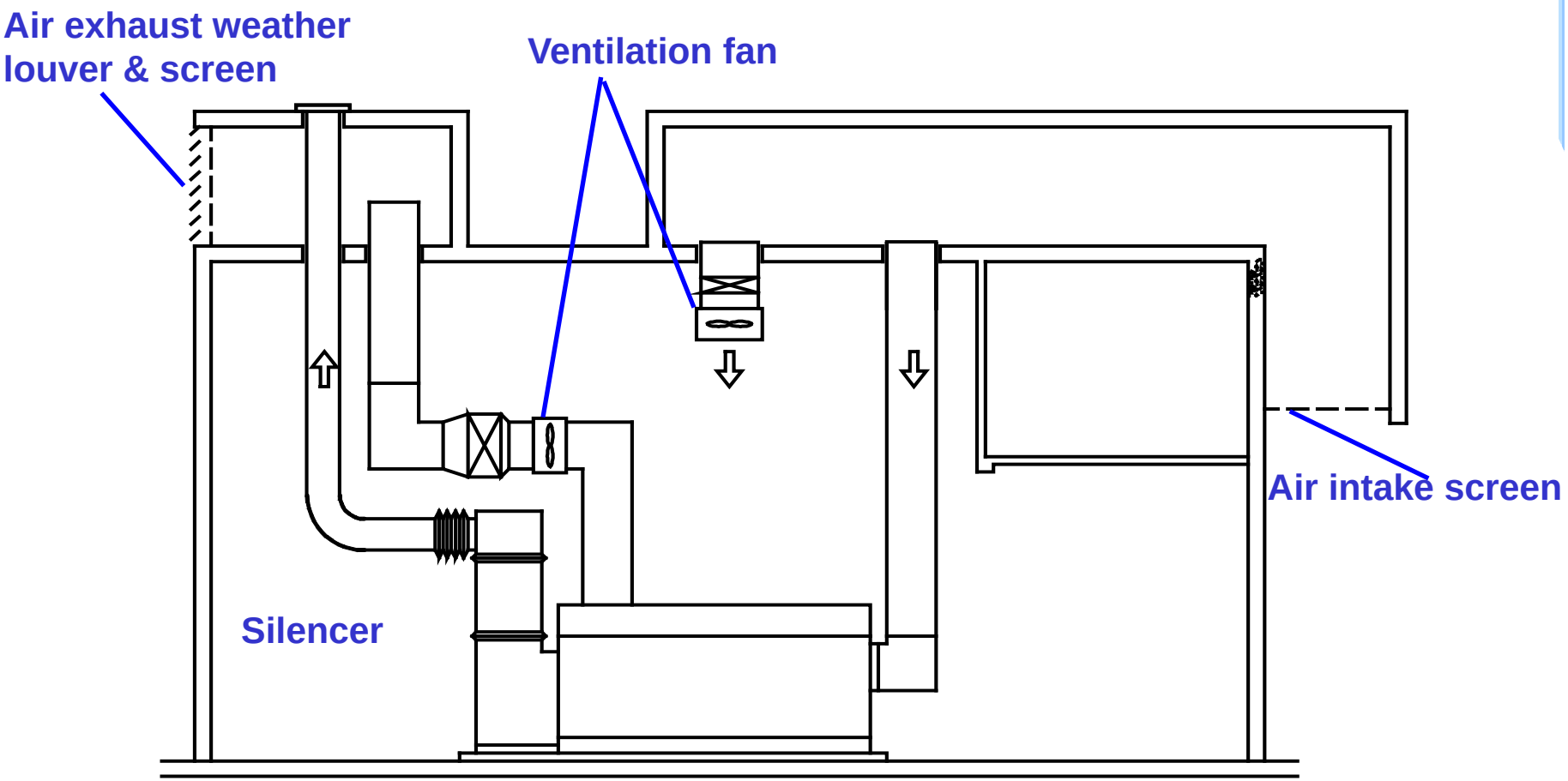

# 9.5.8 GTG Combustion Air Intake, Turbine Exhaust Room Air Supply, and Air Exhaust System

## ➢ Major RAIs (Confirmatory Items)

| RAI No. | Question | RAI Topic / NRC Concern | RAI Response / DCD Impact |
|---|---|---|---|
| 704-5248 | 9.5.8-28 | -The detail how the combustion air intake will be designed to prevent the ingestion of snow and rain. **[Confirmatory Item 9.5.8-1]** | ➢ MHI provided: The intake structure extends beyond the edge and below the roof line of the PS/B. The air intake opening intake structure is in a horizontal position facing downward. |
| 754-5617 | 14.3.6-22 | -Rev. 3 of US-APWR DCD, Table 2.6.4-1, Item 11 – This ITAAC should verify a design that provides adequate separation of the intake and exhaust in accordance with the design description in Tier 2 Section 9.5.8.3 A which states that the exhaust is "located appropriately away" from the intake, "thereby minimizing the chances of the turbine exhaust being drawn into the intake." **[Confirmatory Item 9.5.8-2]** | ➢ MHI provided: US-APWR DCD Revision 3 Tier 1, Section 2.6.4.1 Design Description 11 and corresponding Table 2.6.4-1, ITAAC #11 will be revised to specify that the Class 1E EPS engine air intake is "appropriately separated from the engine exhaust to minimize recirculation of exhaust gases to the air intake." |

# 9.5.8 GTG Combustion Air Intake, Turbine Exhaust Room Air Supply, and Air Exhaust System

## ➢ Major RAIs (Confirmatory Items)

| RAI No. | Question | RAI Topic / NRC Concern | RAI Response / DCD Impact |
|---|---|---|---|
| 754-5617 | 14.3.6-25 | -Rev. 3 of US-APWR DCD, Table 2.6.4-1, Item 25 – This item addresses the power supply for the fuel oil transfer pumps.<br>-There are other support system components that are also powered by the respective Class 1E division power supply, such as the ventilation/cooling supply and exhaust fans.<br>**[Confirmatory Item 9.5.8-3]** | ➢ MHI provided:<br>US-APWR DCD Revision 3 Tier 1, Section 2.6.4.2 Design Description 25 and Table 2.6.4-1 ITAAC #25 will be revised to verify Class 1E power for Class 1E EPS ventilatoin fans. |

U.S.NRC

United States Nuclear Regulatory Commission

*Protecting People and the Environment*

# Presentation to the ACRS Subcommittee

**Mitsubishi Heavy Industries (MHI)**

**US-APWR Design Certification Application Review**

**Safety Evaluation with Open Items: Chapter 9**

**AUXILIARY SYSTEMS**

MARCH 22-23, 2012

# Staff Review Team

U.S.NRC
United States Nuclear Regulatory Commission
*Protecting People and the Environment*

- **Technical Staff Presenters**
  - Larry Wheeler – DCD Section 9.2.1 and 9.2.2
  - Angelo Stubbs – DCD Sections 9.2.6
  - David Nold – DCD Sections 9.4.1 and 9.4.5
- **Project Managers**
  - Jeff Ciocco – Lead Project Manager
  - Paul Kallan – Chapter 9 Project Manager

# Staff Review Team

- **Diego Saenz**
  Reactor System, Nuclear Performance and Code Review Branch
- **Larry Wheeler**
  Balance of Plant and Technical Specifications Branch
- **Gordon Curran**
  Balance of Plant and Technical Specification Branch
- **Chang Li**
  Balance of Plant and Technical Specifications Branch
- **Ryan Eul**
  Balance of Plant and Technical Specifications Branch
- **Raul Hernandez**
  Balance of Plant and Fire Protection Branch
- **Angelo Stubbs**
  Balance of Plant and Fire Protection Branch
- **Thinh Dinh**
  Balance of Plant and Fire Protection Branch

# Staff Review Team

- **Robert Radlinski**
  Balance of Plant and Fire Protection Branch
- **David Nold**
  Containment and Ventilation Branch
- **Eduardo Sastre**
  Component Integrity Branch
- **Eugene Eagle**
  Instrumentation and Controls Branch
- **Robert Fitzpatrick**
  Instrumentation and Controls Branch

# Overview of Design Certification Application, Chapter 9

U.S.NRC
United States Nuclear Regulatory Commission
*Protecting People and the Environment*

| SRP Section/Application Section | | No. of Questions | Number of OI |
|---|---|---|---|
| 9.1.1 | Criticality Safety of Fresh and Spent Fuel Storage and Handling | 23 | 0 |
| 9.1.2 | New and Spent Fuel Storage | 25 | 0 |
| 9.1.3 | Spent Fuel Pool Cooling and Cleanup System | 9 | 1 |
| 9.1.4 | Light Load Handling System | 23 | 1 |
| 9.1.5 | Overhead Heavy Load Handling Systems | 19 | 1 |
| 9.2.1 | Station Service Water System | 59 | 1 |

# Overview of Design Certification Application, Chapter 9

U.S.NRC
United States Nuclear Regulatory Commission
*Protecting People and the Environment*

| SRP Section/Application Section | | No. of Questions | Number of OI |
|---|---|---|---|
| 9.2.2 | Reactor Auxiliary Cooling Water | 85 | 1 |
| 9.2.4 | Potable and Sanitary Water Systems | 3 | 0 |
| 9.2.5 | Ultimate Heat Sink | 10 | 0 |
| 9.2.6 | Condensate Storage Facilities | 3 | 1 |
| 9.2.7 | Chilled Water System (Reviewed under 9.2.2) | 0 | 0 |
| 9.2.8 | Turbine Component Cooling Water System (Reviewed under 9.2.2) | 0 | 0 |

# Overview of Design Certification Application, Chapter 9

U.S.NRC
United States Nuclear Regulatory Commission
*Protecting People and the Environment*

| SRP Section/Application Section | | No. of Questions | Number of OI |
|---|---|---|---|
| 9.2.9 | Non-Essential Service Water System (Reviewed under 9.2.2) | 0 | 0 |
| 9.3.1 | Compressed Air System | 5 | 0 |
| 9.3.2 | Process and Post-accident Sampling Systems | 16 | 0 |
| 9.3.3 | Equipment and Floor Drainage System | 19 | 0 |
| 9.3.4 | Chemical and Volume Control System | 25 | 0 |
| 9.4.1 | Control Room Area Ventilation System | 32 | 4 |

# Overview of Design Certification Application, Chapter 9

U.S.NRC
United States Nuclear Regulatory Commission
*Protecting People and the Environment*

| SRP Section/Application Section | | No. of Questions | Number of OI |
|---|---|---|---|
| 9.4.2 | Spent Fuel Pool Area Ventilation System | 7 | 0 |
| 9.4.3 | Auxiliary and Radwaste Area Ventilation System | 21 | 5 |
| 9.4.4 | Turbine Area Ventilation System | 8 | 1 |
| 9.4.5 | Engineered Safety Feature Ventilation System | 22 | 2 |
| 9.4.6 | Containment Ventilation System | 21 | 1 |
| 9.5.1 | Fire Protection Program | 19 | 0 |

# Overview of Design Certification Application, Chapter 9

U.S.NRC
United States Nuclear Regulatory Commission
*Protecting People and the Environment*

| SRP Section/Application Section | | No. of Questions | Number of OI |
|---|---|---|---|
| 9.5.2 | Communications Systems | 12 | 0 |
| 9.5.3 | Lighting Systems | 9 | 0 |
| 9.5.4 | Emergency Diesel Engine Fuel Oil Storage and Transfer System (Reviewed under 9.5.4) | 51 | 1 |
| 9.5.5 | Emergency Diesel Engine Cooling Water System | 0 | 0 |
| 9.5.6 | Emergency Diesel Engine Starting System | 25 | 0 |
| 9.5.7 | Emergency Diesel Engine Lubrication System | 24 | 0 |

# Overview of Design Certification Application, Chapter 9

| SRP Section/Application Section | | No. of Questions | Number of OI |
|---|---|---|---|
| 9.5.8 | Emergency Diesel Engine Combustion Air Intake and Exhaust System | 28 | 0 |
| Totals | | 603 | 20 |

# Technical Topics

## Section 9.2.1 - Essential Service Water System (ESWS)

U.S.NRC
United States Nuclear Regulatory Commission
*Protecting People and the Environment*

- ESWS blowdown (4 trains) and strainer backwash discharge (4 trains) connect to a common header which discharges to circulating water blowdown (AOV-577)
- Safety related to nonsafety related interface
- ESW- AOV-577 automatically closes on UHS basin low level, ESWS pump stop, ECCS actuation, and LOOP
- **Open Item x (RAI 6344)** – Provide detailed information on the four different power supplies, I&C logic related to ESWS pump stop, and completed the Failure Modes and Effects Analysis (FMEA)

# Technical Topics

## Section 9.2.2 - Component Cooling Water System (CCWS)

U.S.NRC
United States Nuclear Regulatory Commission
*Protecting People and the Environment*

- 420 cubic feet CCWS surge tank is shared between two CCWS trains
- Total of two CCWS surge tanks per unit
- No automatic valve isolation is provided to separate the two CCWS trains
- CCWS surge tank has 7 days of water volume (no safety related makeup required)
- CCWS is a moderate-energy system (Table 3.6-1), operating < 200 F and < 275 psig.

- **Open Item x (RAI 878-6200, Question 09.02.02-85)** – Provide details on how the CCWS is designed against postulated piping leak paths since a leak in the common CCWS pump discharge header has a potential to drain the common CCWS surge tank, affects two CCWS trains
- Staff received MHI RAI response on March 5, 2012 – response is under staff's evaluation

# Technical Topics

## Section 9.2.6 - Condensate Storage Facilities

U.S.NRC
United States Nuclear Regulatory Commission
*Protecting People and the Environment*

- **Key Design Features**
  - The CSF supplies/receives condensate as required by the condenser hotwell.
  - The CSF has no safety-related functions, EFWS draws water from EFW pits.
  - The CST is a 750,000 gallon non-seismic tank which uses a non-seismic dike to mitigate the environmental effects of system leakage or storage tank failure.
- **CSF Safety Evaluation Review**
  - Staff reviewed design against SRP 9.2.6, and found GDC 2 and GDC 60 to be applicable to US-APWR design. (DCD Table 1.9.2 shows SRP 9.2.6 as N/A)
  - SRP 9.2.6 Section III.3.E - (1) Outdoor storage tank designed in compliance with GDC 60 and Reg Guide 1.143. (2) For a non-safety-related storage facility, the need for a seismic Category 1 dike or retention basin is reviewed.
- **Open Item 9.2.6-3 – (RAI 9.2.6.3)**
  - Request that the applicant provide justification for use of a non-seismic dike. Specifically the applicant is asked to discuss how the CSF design complies with GDC 2, and 60, since failure of the tank and dike could result in the release of the condensate to the environment and potential flooding.

# Technical Topics

## Section 9.4.1 and 9.4.5 – Control Room Area Ventilation System and Engineered Safety Feature Ventilation System

U.S.NRC
United States Nuclear Regulatory Commission
*Protecting People and the Environment*

- **Regulation**: CFR 50.63 and GDC 4

- **Concern**: Staff seeks to maintain temperatures within design limits in areas served by the MCR HVAC system (Q 09.04.01-30) and by the ESF HVAC subsystems (Q 09.04.05-22) following SBO. Assurance is provided by establishing an AAC power source to these systems within 60 minutes of SBO onset.

- **Open Items:** DCD section 9.4.1; RAI 883-6063, Question 09.04.01-30 and DCD section 9.4.5; RAI 825-5999, Question 09.04.05-22. DCD Revision 3 test criteria of DCD section 14.2.12.1.46 "Alternate AC Power Sources for Station Black Out Preoperational Test" needs further clarification to ensure it meets the intent of RG 1.155.

# Technical Topics

## Section 9.4.1 – Control Room Area Ventilation System

U.S.NRC
United States Nuclear Regulatory Commission
*Protecting People and the Environment*

- **Regulation:** GDC 2 and GDC 4

- **Concern**: Staff could not conclude that a internal leak within the MCR AHUs, should it occur, would not present a threat to the instrumentation and controls located in the Main Control Room below via the common HVAC duct lines (i.e. supply and return). Non safety related equipment drains route normal condensate out of the AHUs.

- **Open Item:** DCD section 9.4.1, RAI 883-6063, Q 09.04.01-32. The essential chilled water system supplies cooling water to these AHUs and is a moderate energy system. The MCR AHUs are safety-related, equipment class 3, seismic category I components. Applicant in process of formulating a response.

# Figure 9.4.1-1

**(back-up slide)**

U.S.NRC
United States Nuclear Regulatory Commission
*Protecting People and the Environment*



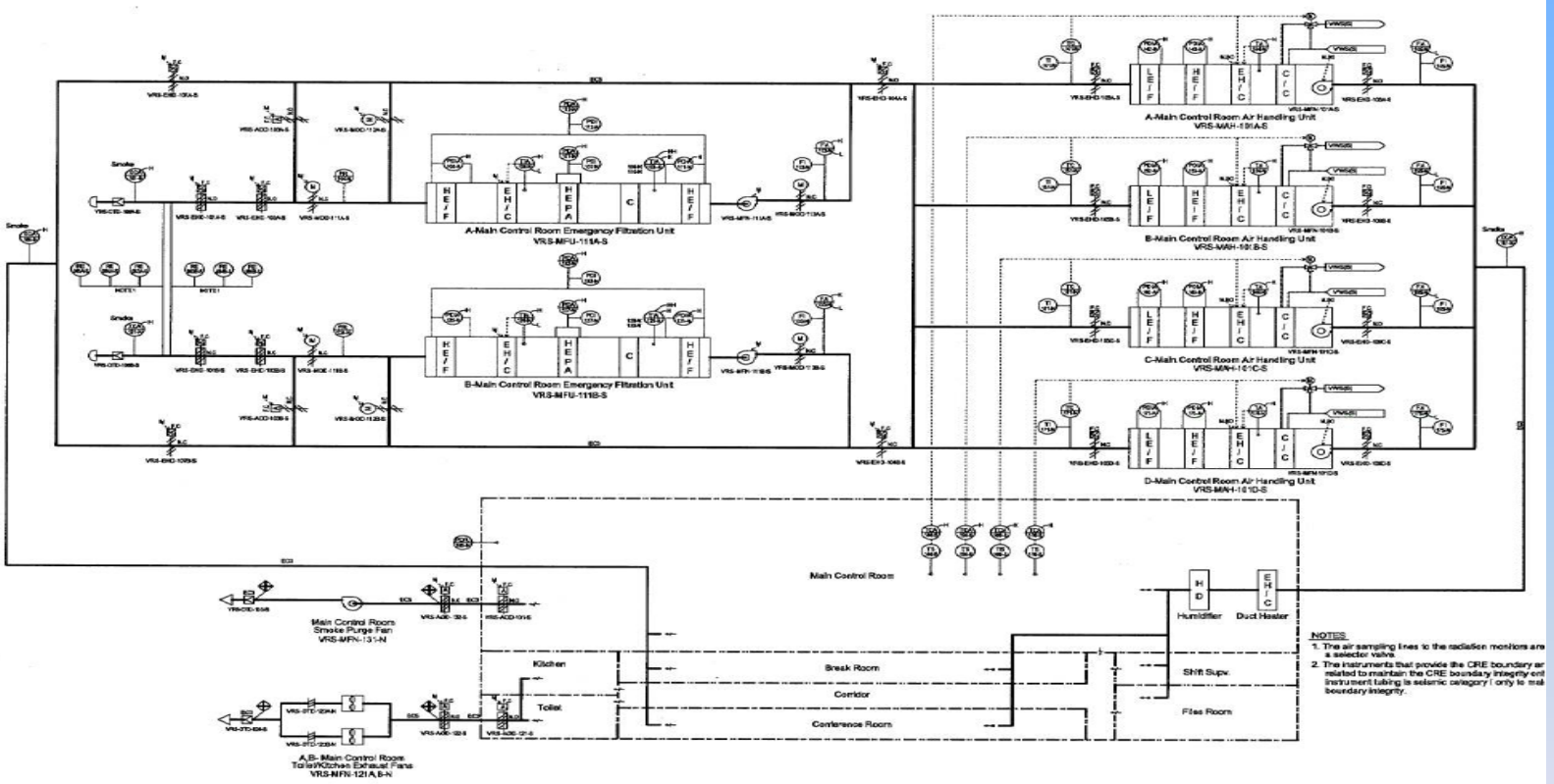


Figure 9.4.1-1 MCR HVAC System Flow Diagram

# 9.1.3 Spent Fuel Pit Cooling and Purification System (SFPCS)

- **SFP water level**

| | | Type | Set point | Interlock |
|---|---|---|---|---|
| DCD Rev.3 | Non-safety x 2 | Continuous | High | - |
| | | | Low | - |
| | | | Low-Low (*) | Pump stop |
| RAI 756-5753 | Non-Safety x 1 | Continuous | High | - |
| | | | Low | - |
| | Safety x 2 | Level switch | Low-Low (*) | Pump stop |
| Open item RAI No. 735-5723 | Non-Safety x 1 | Continuous | High | - |
| | | | Low | - |
| | Safety x 2 | Level switch | Low-Low (*) | Pump stop, non-seismic isolation |

*(*) Low-Low setpoint is above pump suction piping with adequate length to prevent vortex formation*

# 9.1.3 Spent Fuel Pit Cooling and Purification System (SFPCS)

- **SFP temperature**

| | | Type | Set point | Interlock |
|---|---|---|---|---|
| DCD Rev.3 | Non-safety x 1 | Continuous | High | - |
| RAI 756-5753 | Safety x 2 | Continuous | High | - |

DCD Section 9.2.5.1 Design Bases

The UHS is designed with inventory sufficient to provide cooling for at least 30 days **(or at least 36 days for cooling pond in accordance with Regulatory Guide 1.27**) following an accident, with no makeup water.

RG 1.27 - 30 days supply
36 days period of time
(meteorological conditions) for spray ponds

DCD_09.02.02-49
DCD_09.02.02-51

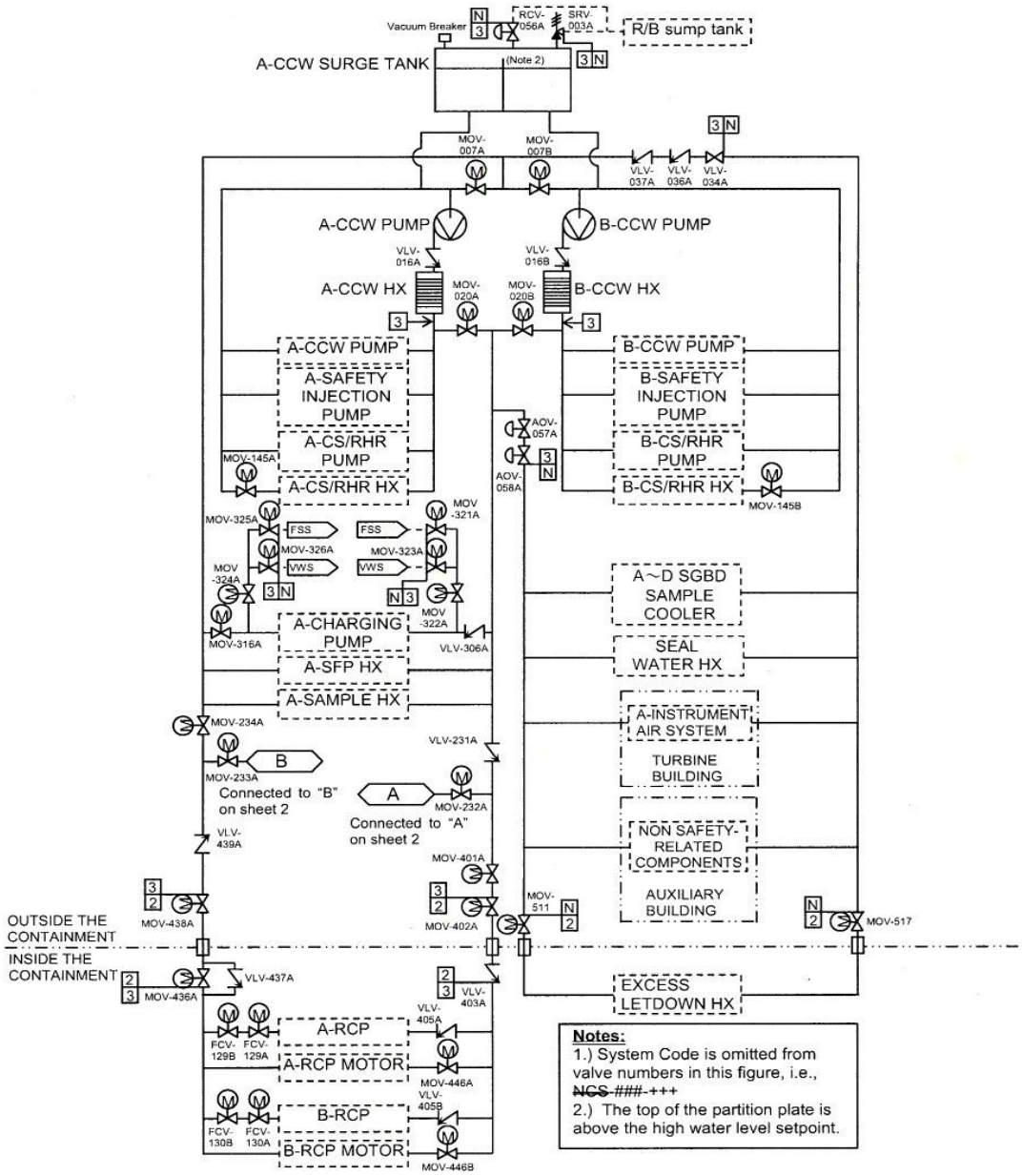


**Figure 2.7.3.3-1 Component Cooling Water System (Sheet 1 of 2)**

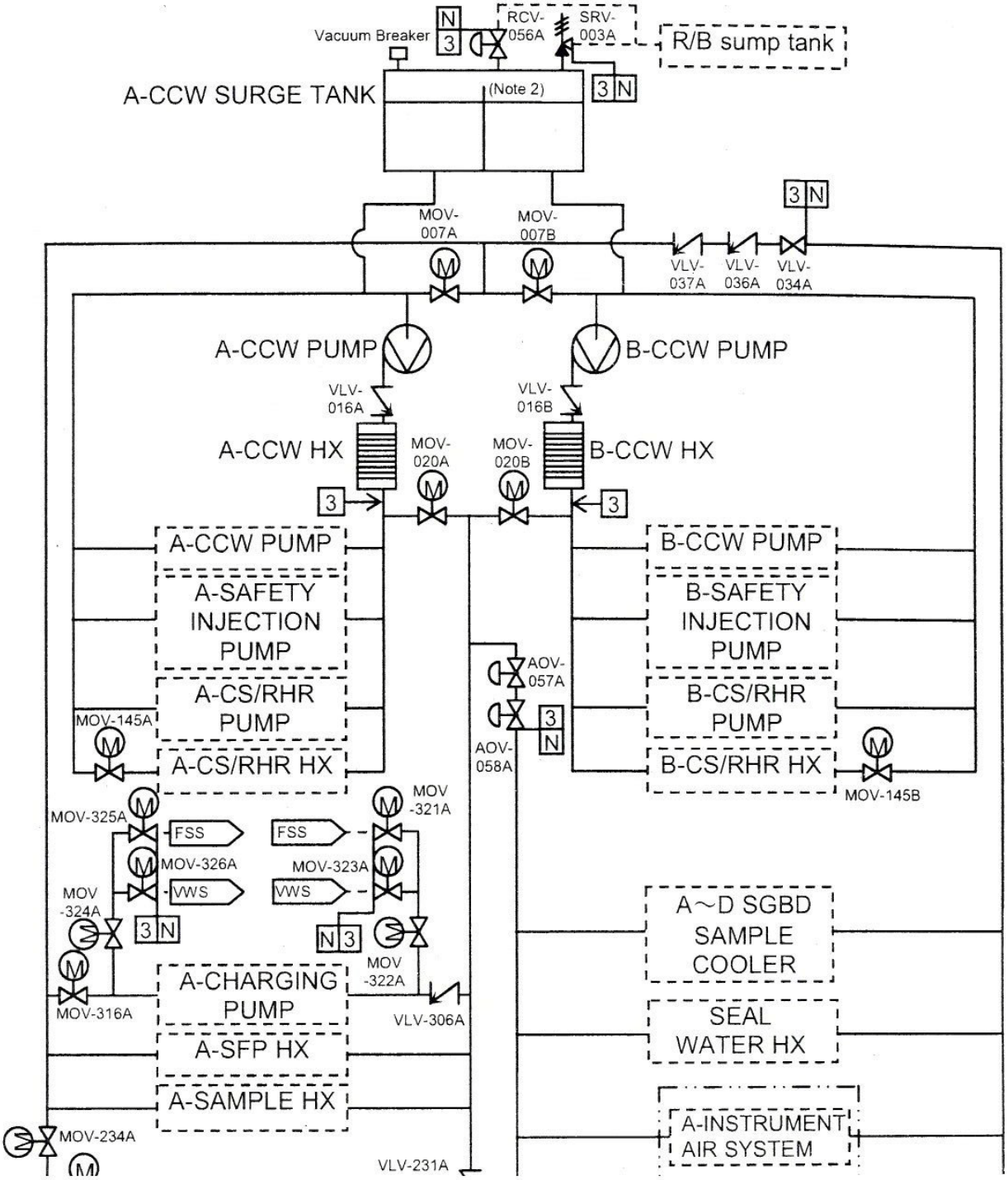
Vacuum Breaker
N
3
RCV-056A
SRV-003A
R/B sump tank
A-CCW SURGE TANK
(Note 2)
3 N
MOV-007A
MOV-007B
3 N
VLV-037A
VLV-036A
VLV-034A
A-CCW PUMP
B-CCW PUMP
VLV-016A
VLV-016B
A-CCW HX
MOV-020A
MOV-020B
B-CCW HX
3
3
A-CCW PUMP
A-SAFETY INJECTION PUMP
A-CS/RHR PUMP
A-CS/RHR HX
B-CCW PUMP
B-SAFETY INJECTION PUMP
B-CS/RHR PUMP
B-CS/RHR HX
AOV-057A
AOV-058A
3
N
MOV-145A
MOV-145B
MOV-325A
FSS
FSS
MOV-321A
MOV-326A
MOV-323A
VWS
VWS
MOV-324A
3 N
N 3
MOV-322A
MOV-316A
A-CHARGING PUMP
VLV-306A
A-SFP HX
A-SAMPLE HX
A~D SGBD SAMPLE COOLER
SEAL WATER HX
A-INSTRUMENT AIR SYSTEM
MOV-234A
VLV-231A

SECY-77-439

D. Passive Failure in a Fluid System
A passive failure in a fluid system means a breach in the fluid pressure boundary or a mechanical failure which adversely affects a flow path.

Examples include the failure of a simple check valve to move to its correct position when required, the leakage of fluid from failed components, such as pipes and valves--particularly through a failed seal at a valve or pump--or line blockage. Motor-operated valves which have the source of power locked out are allowed to be treated as passive components**.**

**In the study of passive failures it is current practice to assume fluid leakage owing to gross failure of a pump or valve seal during the long term cooling mode following a LOCA (24 hours or greater after the event) but not pipe breaks.**