MITSUBISHI HEAVY INDUSTRIES, LTD.
16-5, KONAN 2-CHOME, MINATO-KU
TOKYO, JAPAN

May 30, 2012

Document Control Desk
U.S. Nuclear Regulatory Commission
Washington, DC 20555-0001

Attention: Mr. Jeffrey A. Ciocco

Docket No. 52-021
MHI Ref: UAP-HF-12128

Subject: **MHI's Response to US-APWR DCD RAI No. 921-6415 Revision 0 (SRP 06.02.02)**

Reference:
[1] "Request for Additional Information No. 921-6415 Revision 0, SRP Section: 06.02.02 – Containment Heat Removal System –Application Section: 6.2." dated April 16 2012 (ML12114A293).
[2] MHI Letter UAP-HF-12131, "MHI's 2nd Amended Response to US-APWR DCD RAI No. 815-5986 Revision 3 (SRP 06.03)" dated May 2012.
[3] MHI Letter UAP-HF-12126 "MHI's 3rd Amended Response to US-APWR DCD RAI No. 740-5719 Revision 2 (SRP 06.02.02)" dated May 2012.
[4] MHI Letter UAP-HF-12127, "MHI's Amended Response to US-APWR DCD RAI No. 839-6103 Revision 3 (SRP 06.02.02)" dated May 2012.

With this letter, Mitsubishi Heavy Industries, Ltd. ("MHI") transmits to the U.S. Nuclear Regulatory Commission ("NRC") a document entitled "Response to Request for Additional Information No. 921-6415 Revision 0 ".

Enclosed is the response to Questions 06.02.02-89 through 06.02.02-93 contained within Reference 1, which are follow-up questions to Question 06.02.02-64 of Reference 3 and Questions 06.02.02-71 and 06.02.02-73 of Reference 4.

The enclosed RAI response is related to the hold-up water volume calculation related to GSI-191. MHI changed the design of the recirculation water flow path under post-LOCA conditions, as described in response to RAI 815-5986 in Reference 3. The response contained in this letter reflects the design change. With regard to the hold-up volume calculation, two other RAI responses are being transmitted with the same timing as this letter in order to appropriately reflect the design change of the recirculation flow path (References 3 and 4).

Please contact Mr. Joseph Tapia, General Manager of Licensing Department, Mitsubishi Nuclear Energy Systems, Inc. if the NRC has questions concerning any aspect of this submittal. His contact information is provided below.

D081
NRO

Sincerely,

Y. Ogata

Yoshiki Ogata,
Director - APWR Promoting Department
Mitsubishi Heavy Industries, LTD.

Enclosures:

1. Response to Request for Additional Information No. 921-6415 Revision 0

CC: J. A. Ciocco
J. Tapia

Contact Information
Joseph Tapia, General Manager of Licensing Department
Mitsubishi Nuclear Energy Systems, Inc.
1001 19th Street North, Suite 710
Arlington, VA 22209
E-mail: joseph_tapia@mnes-us.com
Telephone: (703) 908 – 8055

Enclosure 1

UAP-HF-12128
Docket No. 52-021

Response to Request for Additional Information No. 921-6415
Revision 0

May 2012

RESPONSE TO REQUEST FOR ADDITIONAL INFORMATION

5/29/2012

US-APWR Design Certification

Mitsubishi Heavy Industries, Ltd.

Docket No. 52-021

RAI NO.:	**NO. 921-6415 REVISION 0**
SRP SECTION:	**06.02.02 – Containment Heat Removal System**
APPLICATION SECTION:	**6.2**
DATE OF RAI ISSUE:	**4/16 /2012**

QUESTION NO. : 06.02.02-89

Follow-up to Question 06.02.02-64:

In response to question 06.02.02-64, the selection of the flow coefficient C was based, in part, on Reference 8, "Discharge characteristics of weirs of finite crest width." Reference 8 shows that the flow coefficient C is a function of H/B at least for values of H/P up to unity. Given that the US-APWR H/P exceeds unity, what is the justification for why Reference 8 is still applicable for selection of flow coefficient C?

ANSWER:

As the NRC indicated, the H/P value exceeds unity (i.e., unity is 0 < P/H < 1, but P/H = 2 for the US-APWR). However, the state of the weir moves close to an abrupt drop. Therefore, the state of the US-APWR is in the transition range between overflow of the weir and abrupt drop.

Water depth of an abrupt drop can be calculated using following equation.

$$h = \sqrt[3]{Q^2 / gB^2}$$

Where,
h: water depth
Q: flow rate
g: gravitational acceleration
B: width of the flow path

Using same conditions for Q and B, water depth "h" becomes

$$h = \sqrt[3]{1.01^2 / (9.81 \times 21.12^2)}$$
$$= 0.062(m)$$
$$= 2.4(in)$$

Calculated overflow height in response to Question No. 06.02.02-64 (see Reference 1) was 4 in. Therefore, it is considered that the actual overflow height will be in the range between 4 in. and 2.4 in.

Although MHI decided to continue to use the formula defined in "Discharge characteristics of weirs of finite crest width" (see Reference 2), the uncertainty of using the formula is discussed in the response to Question No. 06.02.02-73 (Reference 3).

References

1) MHI Letter No. UAP-HF-12126, "MHI's 3rd Amended Response to US-APWR DCD RAI No. 740-5719 Revision 2 (SRP 06.02.02)", dated May 2012.
2) Rao N.S. Govinda, Muralidhar D. "Discharge characteristics of weirs of finite crest width". J La Houille Blanche 1963;18(5):537–45.
3) MHI Letter No. UAP-HF-12127, "MHI's Amended Response to US-APWR DCD RAI No. 839-6103 Revision 3 (SRP 06.02.02)", dated May 2012.

Impact on DCD

There is no impact on the DCD.

Impact on R-COLA

There is no impact on the R-COLA.

Impact on S-COLA

There is no impact on the S-COLA.

Impact on PRA

There is no impact on the PRA.

Impact on Technical/Topical Report

There is no impact on the Technical/Topical Report.

RESPONSE TO REQUEST FOR ADDITIONAL INFORMATION

5/29/2012

US-APWR Design Certification

Mitsubishi Heavy Industries, Ltd.

Docket No. 52-021

RAI NO.:	**NO. 921-6415 REVISION 0**
SRP SECTION:	**06.02.02 – Containment Heat Removal System**
APPLICATION SECTION:	**6.2**
DATE OF RAI ISSUE:	**4/16 /2012**

QUESTION NO. : 06.02.02-90

Follow-up to Question 06.02.02-71:

What is the horizontal surface area for the reactor cavity and header compartment as a function of elevation from the top (crest) of the overflow pipe until the rooms are considered full? The staff wants to understand the relationship between the calculated water heights above the overflow pipe entrance to the room's holdup volume. For example, if the overflow water height ranged from 0 to 10 or more inches above the pipe entrance what is the associated holdup volume for the reactor cavity and header compartments, individually.

ANSWER:

The horizontal area in the reactor cavity and the header compartment is approximately 2,230 ft^2 and 110 ft^2, respectively. This corresponds to approximately 186 ft^3 and 10 ft^3 increase or decrease per 1 inch (in.) overflow height difference in these rooms.

In the header compartment there is an 8 in. space from the design basis overflow height EL. 21'-3". Therefore, the hold-up water volume increases approximately 1,500 ft^3 in the case that the water level goes up to the ceiling level.

However, the accumulator volume, which is approximately 8,500 ft^3 at minimum, are conservatively neglected in the hold-up volume calculation. In addition, there is 1,370 ft^3 margin for the US-APWR hold-up water volume. Therefore, MHI believes the uncertainties for overflow height are bounded by the conservatisms described above.

Impact on DCD

There is no impact on the DCD.

Impact on R-COLA

There is no impact on the R-COLA.

Impact on S-COLA

There is no impact on the S-COLA.

Impact on PRA

There is no impact on the PRA.

Impact on Technical/Topical Report

There is no impact on the Technical/Topical Report.

RESPONSE TO REQUEST FOR ADDITIONAL INFORMATION

5/29/2012

US-APWR Design Certification

Mitsubishi Heavy Industries, Ltd.

Docket No. 52-021

RAI NO.:	**NO. 921-6415 REVISION 0**
SRP SECTION:	**06.02.02 – Containment Heat Removal System**
APPLICATION SECTION:	**6.2**
DATE OF RAI ISSUE:	**4/16 /2012**

QUESTION NO. : 06.02.02-91

Follow-up to Question 06.02.02-71:

In Part 2 of the response to Question 06.02.02-71, MHI refers to figure 9-57 (Reference 3) for determining the circular crest coefficient. Request MHI provided justification that use of figure 9-57 is appropriate for MHI's overflow pipe design/analysis. For example, is the crest profile and transition shape applicable to the US-APWR design and is aeration provided so that sub-atmospheric pressures do not exist along the lower nappe surface contact?

ANSWER:

See response to Question No. 06.02.02-71 (Reference 1) for the applicability of the figure that is used to determine the flow coefficient. The response also discusses the uncertainty and sensitivity of the overflow height calculation.

References

1) MHI Letter No. UAP-HF-12127, "MHI's Amended Response to US-APWR DCD RAI No. 839-6103 Revision 3 (SRP 06.02.02)", dated May 2012.

Impact on DCD

There is no impact on the DCD.

Impact on R-COLA

There is no impact on the R-COLA.

Impact on S-COLA

There is no impact on the S-COLA.

Impact on PRA

There is no impact on the PRA.

Impact on Technical/Topical Report

There is no impact on the Technical/Topical Report.

RESPONSE TO REQUEST FOR ADDITIONAL INFORMATION

5/29/2012

US-APWR Design Certification

Mitsubishi Heavy Industries, Ltd.

Docket No. 52-021

RAI NO.:	**NO. 921-6415 REVISION 0**
SRP SECTION:	**06.02.02 – Containment Heat Removal System**
APPLICATION SECTION:	**6.2**
DATE OF RAI ISSUE:	**4/16 /2012**

QUESTION NO. : 06.02.02-92

Follow-up to Question 06.02.02-71:

The water level (hold-up) analysis for each set (three total) of four overflow pipes did not address the arrangement of the overflow pipes and their proximity to each other (within a set) and structures. Therefore, it appears each pipe is treated as an individual pipe that is not influenced by neighboring pipes/structures. Provide an assessment of each set of four overflow pipes that justifies their treatment as individual pipes/circular weirs, taking into account their arrangement with each other and structures, or explain how this uncertainty is accounted for in the water hold-up analysis.

ANSWER:

Basically, MHI believes the effect of adjacent piping and walls is very small because the flow-field difference is small as described in the response to Question No. 06.02.02-72 of Reference 1. The difference is that the flow comes from two dimensions in the response in Reference 1, but in this case flow comes from three dimensions and the flow velocity becomes very low compared to the two dimensional flow.

As described in the response in Reference 1, the overflow height will be 4.1 in., but in order to consider uncertainties for the overflow piping such as the proximity effect, etc., a 20% blockage of the overflow piping was assumed resulting in a calculated overflow height of 4.92 in. Since 5 in. was used for the hold-up water volume calculation, the proximity effect is included in the conservativeness of the overflow height actually used in the hold-up volume calculation.

To evaluate the proximity effect, the red-dashed area in Figure 1 (the narrowest point) is conservatively modeled as shown in Figure 2. The following simplified assumptions were also applied:

1. Assume the overflow piping as a square as shown in Figure 2.

2. Consider the pressure loss of the flow area reduction and curve loss as shown in Figure 2.
3. Assume the loss coefficient of flow area reduction, ζ_1= 0.13, and the curve loss, ζ_2 = 1.13.
4. Flow rate coming to one side is
   0.021 m^3/sec (= 1.01 m^3/sec / 12 pipes / 4 sides).

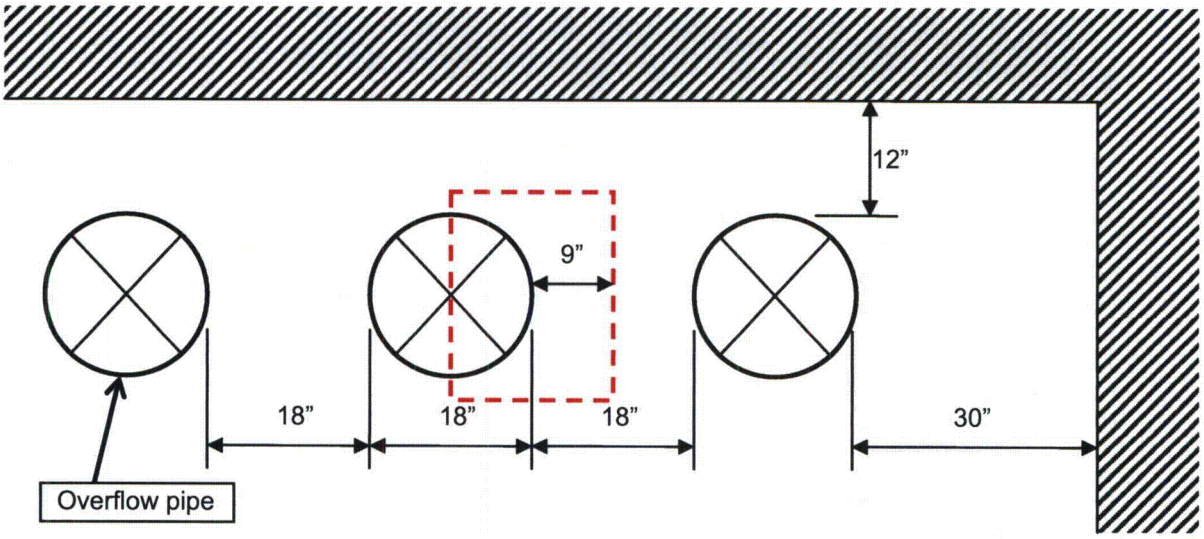

Figure 1: Plan View in Reactor Cavity around Overflow Pipes

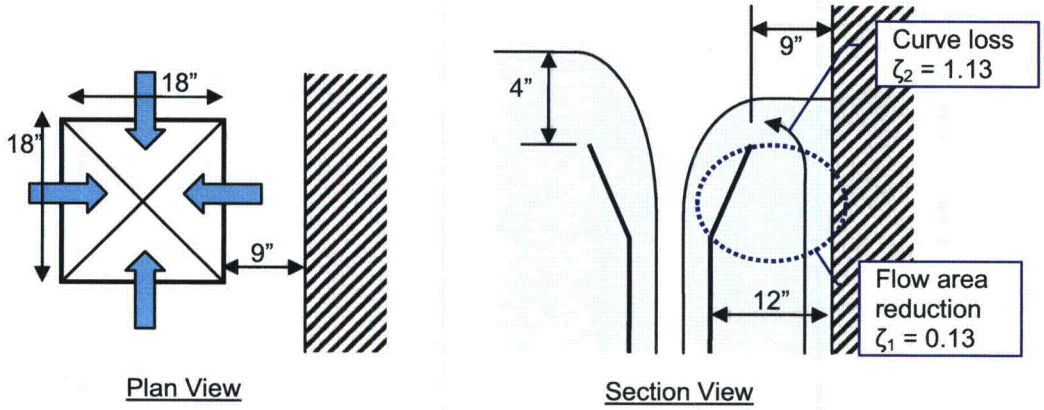

Figure 2: Calculation Model of Proximity Effect

Pressure loss at each point will be as follows:

<u>Flow area reduction</u>

$dh_1 = \zeta_1 V_1^{3/2} / (2g)$

$= 0.13 \times 0.151^{3/2} / (2 \times 9.81)$

$= 0.0004$ m

Where,

dh_1: pressure loss around flow reduction area

V_1 : flow velocity around flow reduction area
$= 0.021\ m^3/sec\ /\ (18" \times 12")$
$= 0.151\ m/sec$
g: gravitational acceleration
$= 9.81\ m/sec^2$

<u>Curve loss</u>
$Dh_2 = \zeta_2 V_2^{3/2} / (2g)$
$= 1.13 \times 0.201^{3/2} / (2 \times 9.81)$
$= 0.0052\ m$
Where,
Dh_2: pressure loss around curve
V_2 : flow velocity around curve
$= 0.021\ m^3/sec\ /\ (18" \times 9")$
$= 0.201\ m/sec$

Thus the total pressure loss becomes 0.0056 m (0.22 in.).

Summarizing the discussion, there is 0.9 in. margin for the overflow height calculation and the proximity effect is only 0.22 in. Therefore, the proximity effect is sufficiently bounded by the existing conservativeness.

References

1) MHI Letter No. UAP-HF-12127, "MHI's Amended Response to US-APWR DCD RAI No. 839-6103 Revision 3 (SRP 06.02.02)", dated May 2012.

Impact on DCD

There is no impact on the DCD.

Impact on R-COLA

There is no impact on the R-COLA.

Impact on S-COLA

There is no impact on the S-COLA.

Impact on PRA

There is no impact on the PRA.

Impact on Technical/Topical Report

There is no impact on the Technical/Topical Report.

RESPONSE TO REQUEST FOR ADDITIONAL INFORMATION

5/29/2012

US-APWR Design Certification

Mitsubishi Heavy Industries, Ltd.

Docket No. 52-021

RAI NO.:	**NO. 921-6415 REVISION 0**
SRP SECTION:	**06.02.02 – Containment Heat Removal System**
APPLICATION SECTION:	**6.2**
DATE OF RAI ISSUE:	**4/16 /2012**

QUESTION NO. : 06.02.02-93

Follow-up to Question 06.02.02-73:

How does MHI account for expansion losses at the flowpath exit (to the "inside")?

ANSWER:

See response to Question No. 06.02.02-73 of Reference 1 for a description of the consideration of expansion losses.

References

1) MHI Letter No. UAP-HF-12127, "MHI's Amended Response to US-APWR DCD RAI No. 839-6103 Revision 3 (SRP 06.02.02)", dated May 2012.

Impact on DCD

There is no impact on the DCD.

Impact on R-COLA

There is no impact on the R-COLA.

Impact on S-COLA

There is no impact on the S-COLA.

Impact on PRA

There is no impact on the PRA.

Impact on Technical/Topical Report

There is no impact on the Technical/Topical Report.