MITSUBISHI HEAVY INDUSTRIES, LTD.
16-5, KONAN 2-CHOME, MINATO-KU
TOKYO, JAPAN

January 27, 2012

Document Control Desk
U.S. Nuclear Regulatory Commission
Washington, DC 20555-0001

Attention: Mr. Jeffrey A. Ciocco

Docket No. 52-021
MHI Ref: UAP-HF-12016

Subject: MHI's Response to US-APWR DCD RAI No.831-6030 Revision 0 (SRP 09.04.03)

References: 1) "Request for Additional Information No. 831-6030 Revision 0, SRP Section: 09.04.03 – Auxiliary and Radwaste Area Ventilation System Application Section: Section 9.4.3" dated September 26, 2011.

With this letter, Mitsubishi Heavy Industries, Ltd. ("MHI") transmits to the U.S. Nuclear Regulatory Commission ("NRC") a document entitled "Response to Request for Additional Information No.831-6030 Revision 0".

Enclosed is the response to 5 RAIs contained within Reference 1.

Please contact Mr. Joseph Tapia, General Manager of Licensing Department, Mitsubishi Nuclear Energy Systems, Inc. if the NRC has questions concerning any aspect of this submittal. His contact information is provided below.

Sincerely,

Y. Ogata

Yoshiki Ogata,
Director- APWR Promoting Department
Mitsubishi Heavy Industries, LTD.

Enclosure:

1. Response to Request for Additional Information No. 831-6030, Revision 0

D081
NRO

CC: J. A. Ciocco
J. Tapia

Contact Information
Joseph Tapia, General Manager of Licensing Department
Mitsubishi Nuclear Energy Systems, Inc.
1001 19th Street North, Suite 710
Arlington, VA 22209
E-mail: joseph_tapia@mnes-us.com
Telephone: (703) 908 – 8055

Enclosure 1

UAP-HF-12016
Docket Number 52-021

Response to Request for Additional Information No. 831-6030,
Revision 0

January, 2012

RESPONSE TO REQUEST FOR ADDITIONAL INFORMATION

1/27/2012

US-APWR Design Certification

Mitsubishi Heavy Industries

Docket No. 52-021

RAI NO.:	**831-6030 REVISION 0**
SRP SECTION:	**09.04.03 -Auxiliary and Radwaste Area Ventilation System**
APPLICATION SECTION:	**DCD SECTIONS 9.4.3**
DATE OF RAI ISSUE:	**9/26/2011**

Question No. : 09.04.03-17

Follow-up RAI

This is a follow-up RAI to the RAI sequence RAI No. 68-841, Question No: 09.04.03-1, RAI 9.4.3-9 and RAI #355-2492 Question No. 09.04.03-4.

In Question No. RAI 09.04.03-4, the staff noted that the auxiliary building ventilation system has the function of providing dilution flow for the effluent of the GWMS so that releases (i.e. from the plant) of radioactive gases are below the concentration limits of 10 CFR 20. The staff requested that the applicant add this design basis function to the "Key Design Features" attributes of DCD Tier 1 subsection 2.7.5.4.1.1. The applicant responded (ML092030376) with a commitment to revise Tier 1 Subsection 2.7.5.4.1.1 to acknowledge this function. The applicant committed to also add the dilution function to the system description. The staff found the applicant's response as acceptable. The staff confirmed that the changes described in the applicant's responses have been adequately incorporated in Revision 2 of the DCD. The staff notes that based on its review of Revision 3 of the DCD, the applicant removed from Tier 1 the very information added to Revision 2 of the DCD that allowed the staff to close these RAI issues in its Phase II SER (ML103120341). Based on this the staff reopens the issues closed issue associated with this RAI sequence, as an Open Item.

The staff requests that the applicant reinstate the information, in some form or fashion, back into Tier 1 to ensure the requirements of 10CFR20 are met.

ANSWER:

Inclusion of inappropriate Tier 1 content, especially inappropriate ITAAC, became a matter of concern to the NRC, as expressed in RIS 2008-05. In response to RIS 2008-05, MHI agreed to undertake a major project to review US-APWR DCD Revision 2 Tier 1 and revise it to closely conform to SRP 14.3 guidance and address RIS 2008-05 concerns.

The Auxiliary Building Ventilation System (ABVS) is not a safety-related system. However, SRP 14.3 guidance says to select for inclusion in Tier 1 the "top-level information" and provide ITAAC to verify "the principal performance characteristics and safety functions" of SSCs "based on a graded approach commensurate with the safety significance" of the SSC. In recognition of ABVS functions related to radiological control, DCD Tier 1 provides the ABVS design description and Tier 1 Table 2.7.5.4-3 provides four sheets of ITAAC to accomplish this purpose. Table 2.7.5.4-3 ITAAC#1 verifies ABVS functional arrangement, which refers to Figures 2.7.5.2-1 and 2.7.5.2-3 to describe functional features of the ABVS,

including its ability to align with the plant vent to provide dilution flow during gaseous release. Actual alignment of the ABVS for compliance with 10 CFR 20 limits is a plant operating consideration and is accomplished in accordance with plant operating procedures, not by ABVS design. Thus, ITAAC do not address this application.

DCD Revision 3 Tier 2 Section 9.4.3 discusses ABVS design and function in greater detail, including its features, capacities, alignments, actuations, and purposes. DCD Tier 2 Section 14.2, "Initial Plant Test Program", provides verification of adequate performance of HVAC functions during pre-operational tests for each of the areas served by HVAC systems, including those served by the ABVS.

MHI believes that the existing Tier 1 descriptions and ITAAC verifications of ABVS are suitable and adequate for verifying ABVS design feature existence in accordance with SRP 14.3 guidance and RIS 2008-05 guidance. MHI also believes that construction and pre-operational testing will verify the ability to achieve specific system alignments and perform design functions described in the DCD, and that plant operating procedures ensure compliance with 10 CFR 20 limits. Thus, MHI believes that it is not appropriate to restore the subject material to Tier 1.

Impact on DCD

There is no impact on the DCD.

Impact on R-COLA

There is no impact on the R-COLA.

Impact on S-COLA

There is no impact on the S-COLA.

Impact on PRA

There is no impact on the PRA.

Impact on Technical / Topical Reports

There is no impact on the Technical / Topical Reports.

RESPONSE TO REQUEST FOR ADDITIONAL INFORMATION

1/27/2012

US-APWR Design Certification

Mitsubishi Heavy Industries

Docket No. 52-021

RAI NO.:	**831-6030 REVISION 0**
SRP SECTION:	**09.04.03 -Auxiliary and Radwaste Area Ventilation System**
APPLICATION SECTION:	**DCD SECTIONS 9.4.3**
DATE OF RAI ISSUE:	**9/26/2011**

Question No. : 09.04.03-18

Follow-up RAI

This is a follow-up RAI to the in-sequence RAI 4845, Question 09.04.03-13 (ML102920331) and RAI 779-5865, Question No. 09.04.03-16 (ML11227A045)

In part 1 of Question 09.04.03-13, the staff asked about the automatic system controls that maintain system exhaust flow rates in excess of 10% greater that system supply flow rates thereby maintaining a slight vacuum. In addition the staff inquired about the design pressure of the Turbine Building with respect to the slight vacuum maintained in adjacent areas served by the ABVS. The staff's emphasis was upon ensuring that an unmonitored release was not plausible in the design of the US-APWR. The applicant provided an incomplete response which necessitated follow-up Question No. 09.04.03-16. In this Question the staff recommended enhanced ITAAC language for ITAAC Table 2.7.5.4-3 line item 10.

The applicant responded that during normal operation, the auxiliary building HVAC system exhaust contains insignificant amounts of radioactive material and is discharged to the atmosphere without filtration, via the plant vent. During normal operating conditions, exfiltration of minimal amounts of this air is expected and represents no significant increase in occupational exposure or offsite dose. The ABVS is also designed to maintain a "slight negative pressure" in the areas it services. This negative pressure "minimizes," but does not prevent, exfiltration from radiological controlled areas during normal plant operation. Minimization of exfiltration is accomplished by maintaining auxiliary building HVAC system exhaust flow at a consistently higher flow rate than supply flow. The applicant did commit to amend the Acceptance Criteria to ITAAC Table 2.7.5.4-3 line item 10 with the words:

"A report exists and concludes that the as-built auxiliary building HVAC system maintains exhaust airflow ≥ 216,000 cfm and exhaust airflow greater than or equal to supply air flow, with any two of operating "as-built" auxiliary building exhaust fans, that maintains a negative pressure in the radiological controlled areas under normal operating conditions"

The staff notes that the applicant's response implies that an unmonitored release (i.e. exfiltration) from the areas served by the ABVS is acceptable based on the fact that the plant emits insignificant amounts of radioactive material through the plant stack during normal operations. The staff notes that there is a key difference between exfiltration and discharge from the plant stack, in that the plant stack release is a monitored release while the exfiltration is not. In addition, the staff notes deficiencies with the proposed ITAAC acceptance criteria wording. Based on the proposed wording the system exhaust flow and the system supply flow could be equal with no motive force to maintain the areas served by the ABVS under

a slight vacuum relative to adjacent areas. Based on these observations, the staff concludes that Part 1 of Question 09.04.03-13 remains an Open Item.

As noted above, the staff considers the proposed words for ITAAC Table 2.7.5.4-3 line item 10 as insufficient in that it does not guarantee that all areas served by the ABVS are maintained at a negative pressure relative to all adjacent areas. The staff again suggests words very similar to

"A report exists and concludes that any combination of two-of-three as-built auxiliary building exhaust fans maintain a negative pressure (i.e. relative to their adjacent non-radiological areas) throughout all radiological controlled areas served, by exhausting ≥ 10% greater flow than the system supply flow rate of 196,000 cfm."

Based on the above the staff requests that the applicant redress their response to Part I of the in-sequence RAI 4845, Question 09.04.03-13 (ML102920331) and RAI 779-5865, Question No. 09.04.03-16

ANSWER:

As described in DCD Subsection 9.4.3.2.1, during normal plant operation, two air handling units and two exhaust fans are operating in the auxiliary building HVAC system. The total supply flowrate from the operating air handling units is 196,000 cfm. The total exhaust flowrate from the operating exhaust fans is 216,000 cfm, as corrected by the response to RAI 779-5865, Question No. 09.04.03-16 (ML11227A045).

As described in response to Question No. 09.04.03-16, the minimization of exfiltration from the areas served by the auxiliary building HVAC system is accomplished by maintaining exhaust flow at a consistently higher flow rate than supply flow. This flow differential provides control of the release of potentially radioactive airborne materials from the radiologically controlled areas under normal operating conditions, thus directing air flow from areas of low radioactivity to areas of progressively higher radioactivity. By the design of the auxiliary building HVAC system, exhaust flowrate is greater than supply flowrate under normal operating conditions, which maintains the slightly negative pressure within the auxiliary building. It is not necessary to maintain 10% greater exhaust flowrate than supply flowrate at all times in order to accomplish this design objective. Therefore, maintaining a 10% flowrate differential is not a key design parameter.

DCD Revision 3 Table 2.7.5.4-3 ITAAC #10 was proposed to be revised in the response to Question No. 09.04.03-16, and will be further revised to clarify that the design commitment is for the auxiliary building HVAC system to maintain exhaust airflow greater than supply airflow to control the release of potentially radioactive materials from radiologically controlled areas, and the acceptance criteria is that two of three exhaust fans will be operating and that exhaust flowrate will be greater than supply flowrate.

Additionally, DCD Tier 1 Subsection 2.7.5.4.1.4 and DCD Tier 2 Subsections 1.2.1.5.4.5, 9.1.2.2.2, 9.4.3.1.2.1, 9.4.3.2.1, 12.3.3.3, and Table 12.3-8 Sheets 28 through 31 will be revised to clarify that the design basis of the auxiliary building HVAC system is to maintain exhaust airflow greater than supply airflow to control the release of potentially radioactive materials from radiologically controlled areas.

Impact on DCD

DCD Revision 3 Tier 1 Subsection 2.7.5.4.1.4 will be revised as follows (See Attachment-1):

> "10. The auxiliary building HVAC system **maintains exhaust airflow greater than supply airflow to** ~~provides a flow rate that maintains a negative pressure~~**provide control of the release of potentially radioactive airborne materials from** ~~in~~ the radiological controlled areas **during normal operation**."

DCD Revision 3 Tier 1 Table 2.7.5.4-3 will be revised as follows (See Attachment-1):

Design Commitment	Inspections, Tests, Analyses	Acceptance Criteria
10. The auxiliary building HVAC system **maintains exhaust airflow greater than supply airflow to provide control of the release of potentially radioactive airborne materials from the** ~~provides a flow rate that maintains a negative pressure in the~~ radiological controlled areas **during normal operation**.	10. Tests and analyses of the as-built auxiliary building HVAC system will be performed.	10. A report exists and concludes that the as-built auxiliary building ~~exhaust fans provide a flow rate~~ **HVAC system provides exhaust airflow** ~~> 108,000 cfm to~~ **≥216,000 cfm and that exhaust airflow is greater than supply airflow, with any two of three operating as-built auxiliary building exhaust fans** ~~maintain a negative pressure in the radiological controlled areas~~.

DCD Revision 3 Tier 2 Subsection 1.2.1.5.4.5 thirteenth paragraph, fourth bullet, will be revised as follows (See Attachment-1):

> "~~Minimize exfiltration from the areas with potential airborne radioactive contaminants by maintaining a slight negative pressure relative to the outside atmosphere~~**Provide control of the release of potentially radioactive airborne materials from the controlled areas by maintaining exhaust airflow greater than supply airflow** during normal operation."

DCD Revision 3 Tier 2 Subsection 9.1.2.2.2 eleventh paragraph will be revised as follows (See Attachment-1):

> "Normal auxiliary building (A/B) HVAC system provides ventilation for the fuel handling area to ~~maintain the atmospheric pressure in this area slightly negative with respect to outside the building~~**provide control of the release of potentially radioactive airborne materials by maintaining exhaust airflow greater than supply airflow in this area**."

DCD Revision 3 Tier 2 Subsection 9.4.3.1.2.1 first paragraph, third bullet, will be revised as follows (See Attachment-1):

> "Control exhaust fan airflow continuously and automatically at a predetermined value to ~~maintain a slightly negative pressure~~**provide control of the release of potentially radioactive airborne materials from** ~~in~~ the controlled areas within A/B, R/B and AC/B relative to the outside atmosphere~~. This minimizes exfiltration from the radiological~~

~~controlled areas~~ **by maintaining exhaust airflow greater than supply airflow** during normal plant operation."

DCD Revision 3 Tier 2 Subsection 9.4.3.2.1 fifth paragraph will be revised as follows (See Attachment-1):

"...Upon energizing the two exhaust fans, their airflow is continuously and automatically controlled at a predetermined value to ~~maintain a slightly negative pressure~~**provide control of the release of potentially radioactive airborne materials from** ~~in~~ the controlled areas within A/B, R/B, including the fuel handling area, and AC/B ~~to minimize exfiltration from the radiological controlled areas~~. **The design exhaust flowrate is maintained with or without the low volume or high volume containment purge exhaust in operation.** The fuel handling area is supplied airflow of 21,800 ft3/min from auxiliary building HVAC system air handling units and exhausts an airflow of 24,000 ft3/min from this area. The airflow to radiological controlled area is adjusted by the balancing damper located in supply and exhaust duct branch throughout the system."

DCD Revision 3 Tier 2 Subsection 12.3.3.3 first paragraph, second bullet, will be revised as follows (See Attachment-1):

"In building compartments with a potential for contamination, the exhaust is designed for greater volumetric flow than is supplied to that area. This ~~minimizes the amount of uncontrolled exfiltration from~~**provides control of the release of potentially radioactive airborne materials from** the area."

DCD Revision 3 Tier 2 Table 12.3-8 Sheet 28 of 61 third bullet will be revised as follows (See Attachment-1):

"The auxiliary building HVAC system controls exhaust fan airflow continuously and automatically at a predetermined value higher than the supply fan airflow to ~~maintain a slightly negative pressure~~**provide control of the release of potentially radioactive airborne materials from** ~~in~~ the controlled areas ~~relative to the outside atmosphere. This minimizes exfiltration from the radiological controlled areas~~ during normal plant operation. The exhaust airflow through the plant's vent stack is a radiologically monitored path."

DCD Revision 3 Tier 2 Table 12.3-8 Sheet 29 of 61 first paragraph will be revised as follows (See Attachment-1):

"The auxiliary building HVAC system controls exhaust fan airflow continuously and automatically at a predetermined value higher than the supply fan airflow to ~~maintain a slightly negative pressure~~**provide control of the release of potentially radioactive airborne materials from** ~~in~~ the controlled areas ~~relative to the outside atmosphere. This minimizes exfiltration from the radiological controlled areas~~ during normal plant operation. The exhaust airflow through the plant's vent stack is a radiologically monitored path."

DCD Revision 3 Tier 2 Table 12.3-8 Sheet 31 of 61 second paragraph will be revised as follows (See Attachment-1):

"The auxiliary building HVAC system controls exhaust fan airflow continuously and automatically at a predetermined value higher than the supply fan airflow to ~~maintain a slightly negative pressure~~**provide control of the release of potentially radioactive airborne materials from** ~~in~~ the controlled areas ~~relative to the outside atmosphere. This minimizes exfiltration from the radiological controlled areas~~ during normal plant operation. The exhaust airflow through the plant's vent stack is a radiologically monitored path."

Impact on R-COLA

There is no impact on the R-COLA.

Impact on S-COLA

There is no impact on the S-COLA.

Impact on PRA

There is no impact on the PRA.

Impact on Technical / Topical Reports

There is no impact on the Technical / Topical Reports.

RESPONSE TO REQUEST FOR ADDITIONAL INFORMATION

1/27/2012

US-APWR Design Certification

Mitsubishi Heavy Industries

Docket No. 52-021

RAI NO.:	**831-6030 REVISION 0**
SRP SECTION:	**09.04.03 -Auxiliary and Radwaste Area Ventilation System**
APPLICATION SECTION:	**DCD SECTIONS 9.4.3**
DATE OF RAI ISSUE:	**9/26/2011**

Question No. : 09.04.03-19

Follow-up RAI

This is a follow-up RAI to the in-sequence RAI 4845, Question 09.04.03-13 (ML102920331) and RAI 779-5865, Question No. 09.04.03-16 (ML11227A045)

(1)The applicant responded to Part 2 of Question 09.04.03-13 with a commitment to revise preoperational test 14.2.12.1.99 and subsection 9.4.3.4.1 with concise words that address the staff's principle concern identified in Question 09.04.03-13. The applicant stated that determination of the required frequency of periodic confirmation of flow balance is the responsibility of the COL applicant. The staff requests that the applicant amend DCD subsection 9.4.3.4.1 to clearly assign to the COL applicant the responsibility of establishing the periodicity of ABVS flow balancing such that all unmonitored releases are prevented.

(2) The applicant responded to Question No. 09.04.03-16 with a commitment to add flow damper VAS-AOD-513-N between the interface connection and the three Auxiliary Building Exhaust Fans. In addition the applicant provided the following fundamental system design information with their response. This flow damper will be installed to adjust the ABVS exhaust airflow rate to design flow rate described in DCD subsection 9.4.3.2.1 regardless of the operation of HVCP and LVCP. HVCP does not operate under 2 psig containment pressure plus the pressure developed across the fan since HVCP operates during refueling operations. During the operation of LVCP under these conditions, the ABVS provides the design exhaust air by the adjustment of the flow damper VAS-AOD-513-N. Therefore, there is no airflow from HVCP and LVCP to ABVS under these conditions.

The applicant continued in their response that the connection from the containment ventilation system (VCS) low volume and high volume purge exhaust to the auxiliary building ventilation system (ABVS) exhaust duct provides a flow path to the vent stack as shown on DCD Figure 9.4.3-1. The ductwork for this connection and the ABVS exhaust duct, and the duct from individual areas in the auxiliary building to the VCS low volume purge exhaust filtration unit inlet, is rated for pressure conditions resulting from containment purge operation, including an initial containment pressure of 2 psig plus the pressure developed across the fans of HVCP and LVCP, since these ducts could be pressurized during purge operation. Airflow is from the VCS to the vent stack during purge operations, and the duct is sized for maximum system flow rate. There is no backflow to the auxiliary building from the VCS because ABVS exhaust fan discharge isolation dampers are closed for non-operating fans. The high volume containment purge and low volume containment purge exhaust fans are interlocked with flow dampers VAS-AOD-511-S and VAS-AOD-512-S such that the fans will not start if the dampers are closed. Therefore, there is no potential for backflow to the ABVS from containment purge exhaust due to the closure of these flow dampers.

The staff requests that the applicant include in the DCD most, the above information in the appropriate subsections of DCD section 9.4.3. The staff finds that this information is required in the DCD because the FSAR is required to include a system description and the safety analyses. The information is also necessary for the staff to make a satisfactory regulatory finding.

(3) The staff is concerned that the design of the control loop of the recently identified flow damper VAS-AOD-513-N is potentially flawed as displayed in the amended Figure 9.4.3-1 of the applicant's response to RAI 779-5865, Question No. 09.04.03-16 (ML11227A045 pg. 17 of 17). For the flow controller of this flow damper to maintain a negative pressure throughout all areas served by the ABVS, it must guarantee that the system exhaust flow is at least 10% higher than the system supply flow. Figure 9.4.3-1 of the RAI response only has the flow controller sensing the exhaust flow rate of the system.

The staff requests that the applicant revise the design of the flow controller for VAS-AOD-513-N to guarantee that the system exhaust flow is at least 10% higher than the system supply flow by comparing the system exhaust flow rate to the system supply flow rate.

ANSWER:

(1) A COL applicant item will be added to DCD Subsection 9.4.3.4.1 clearly identifying that the frequency of performance of periodic flow balancing of the auxiliary building HVAC system is to be determined by the COL applicant.

(2) The system design details described in the response to RAI 779-5865, Question No. 09.04.03-16 (ML11227A045) that are not currently included in DCD Revision 3 will be added. The locations of system details included in the DCD are provided below for NRC reference.

The flow control damper (VAS-AOD-513-N) installation and function is described in DCD Subsections 9.4.3.1.2.1 and 9.4.3.2.1 and Figure 9.4.3-1 (as revised by the response to RAI 779-5865, Question No. 09.04.03-16).

The operation of the high volume containment purge (HVCP) subsystem only after plant shutdown and during refueling operations is described in DCD Subsection 9.4.6.3.4.

The connection of the HVCP and LVCP to the auxiliary building HVAC system exhaust duct and the flowpath to the plant vent is described in DCD Subsections 9.4.6.2.4.1 and 9.4.6.2.4.2 and Figure 9.4.3-1.

The additional system description details provided in the response to RAI 779-5865, Question No. 09.04.03-16 will be included in the DCD as follows:

The automatic adjustment of auxiliary building HVAC system exhaust flowrate during the operation of the HVCP or low volume containment purge (LVCP) subsystem will be added to DCD Subsection 9.4.3.2.1.

The description of the design rating of the ductwork for pressure and flow conditions resulting from operation of the HVCP, or LVCP with 2 psig containment pressure, will be added to DCD Subsections 9.4.6.2.4.1 and 9.4.6.2.4.2.

The interlock of the auxiliary building exhaust fan discharge isolation damper with fan operation that prevents backflow into the ABVS will be described in DCD Subsection 9.4.3.2.1.

The interlock of the auxiliary building HVAC system exhaust line (plant vent) isolation dampers with the HVCP and LVCP exhaust fans to prevent fan start if a damper is closed will be described in DCD Subsections 9.4.6.2.4.1 and 9.4.6.2.4.2.

(3) The design of the flowrate control loop for VAS-AOD-513-N, as shown in the DCD Figure 9.4.3-1 markup provided in response to RAI 779-5865, Question No. 09.04.03-16, senses auxiliary building HVAC system exhaust flowrate and automatically adjusts the damper to maintain design exhaust flowrate. The auxiliary building HVAC system supply airflow is provided by two auxiliary building air handling units, each is sized for 50% of the total system airflow, as described in DCD Subsection 9.4.3.2.1. During normal plant operation, two air handling units and two exhaust fans are in operation.

As described in the response to RAI 779-5865, Question No. 09.04.03-16, the total supply flowrate is 196,000 cfm and the exhaust flowrate is 216,000 cfm, which is approximately 10% greater than supply flowrate. The auxiliary building HVAC system exhaust airflow is affected by the operation of other ventilation system exhausts due to sharing one vent stack. The control loop of the flow damper VAS-AOD-513 is designed to ensure that the design auxiliary building HVAC system exhaust air flowrate is maintained. As described in the response to Question No. 09.04.03-18 of this RAI, maintaining a 10% flowrate differential is not a key design parameter to accomplish the design objective to control the release of potentially radioactive airborne materials from the radiologically controlled areas within the auxiliary building. Therefore, it is not necessary for the flow control instrumentation to compare auxiliary building HVAC system supply air flowrate to exhaust flowrate in order to ensure that the system design objective is met.

Impact on DCD

DCD Revision 3 Tier 2 Subsection 9.4.3.4.1 will be revised as follows (See Attachment-1):

> "In addition to the general requirements in Subsection 9.4.3.4, the auxiliary building HVAC system safety-related isolation dampers are inspected periodically and the damper seats are replaced as required and tested in accordance with technical specification surveillance requirement for the annulus emergency exhaust system. The auxiliary building HVAC system ventilation flow balancing also is inspected periodically such that an unmonitored release will not occur under credible worst-case ventilation balance conditions. **The COL applicant is to determine the frequency of performance of periodic auxiliary building HVAC system ventilation flow balancing.**"

DCD Revision 3 Tier 2 Subsection 9.4.7 will be revised to add COL applicant item 9.4(7) as follows (See Attachment-1):

> ***"COL 9.4(7) The COL Applicant is to determine the frequency of performance of periodic auxiliary building HVAC system ventilation flow balancing."***

DCD Revision 3 Tier 2 Table 1.8-2 will be revised to add COL applicant item 9.4(7) as follows (See Attachment-1):

COL 9.4(7)	***The COL Applicant is to determine the frequency of performance of periodic auxiliary building HVAC system ventilation flow balancing.***

DCD Revision 3 Tier 2 Subsection 9.4.3.2.1, second paragraph, will be revised as follows (See Attachment-1):

> "The exhaust airflows from the served areas are drawn through air ductwork, by three auxiliary building exhaust fans, each sized for 50% of the total system airflow. Each exhaust fan is equipped with an isolation damper and discharge ductwork leading to the vent stack. **The exhaust fan and associated isolation damper are interlocked to close the damper when the exhaust fan is not in operation, preventing backflow into the auxiliary building HVAC system.**"

DCD Revision 3 Tier 2 Subsection 9.4.3.2.1, fifth paragraph, will be revised as follows (See Attachment-1):

> ".....Upon energizing the two exhaust fans, their airflow is continuously and automatically controlled at a predetermined value to ~~maintain a slightly negative pressure~~**provide control of the release of potentially radioactive airborne materials from** ~~in~~ the controlled areas within

A/B, R/B, including the fuel handling area, and AC/B ~~to minimize exfiltration from the radiological controlled areas~~. **The design exhaust flowrate is maintained with or without the low volume or high volume containment purge exhaust in operation.**"

DCD Revision 3 Tier 2 Subsection 9.4.6.2.4.1, seventh paragraph, will be revised as follows (See Attachment-1):

"Each containment low volume purge exhaust filtration unit consists of, in the direction of airflow, a high efficiency filter, an electric heating coil, a HEPA filter, a charcoal adsorber, a high efficiency filter, and an exhaust fan. Each unit is sized for 100% capacity. The containment air is drawn through the containment low volume purge system penetration by the exhaust filtration unit and discharged to the atmosphere through the plant vent stack. **The ductwork in the containment low volume purge exhaust filtration unit discharge flowpath is rated for pressure and flow conditions resulting from exhaust fan operation in combination with high containment pressure of 2 psig. The filtration unit is interlocked with the auxiliary building HVAC exhaust line (plant vent) isolation dampers to prevent fan operation when one of the two series dampers (i.e. VAS-AOD-511 or VAS-AOD-512) is closed.**"

DCD Revision 3 Tier 2 Subsection 9.4.6.2.4.2, sixth paragraph, will be revised as follows (See Attachment-1):

"The exhaust filtration unit consists of, in the direction of airflow, a high efficiency filter, a HEPA filter, and an exhaust fan. The containment air is drawn through the containment high volume purge system penetration by the exhaust filtration unit and discharged to the atmosphere through the plant vent stack. **The ductwork in the containment high volume purge exhaust filtration unit discharge flowpath is rated for pressure and flow conditions resulting from exhaust fan operation. The filtration unit is interlocked with the auxiliary building HVAC exhaust line (plant vent) isolation dampers to prevent fan operation when one of the two series dampers (i.e. VAS-AOD-511 or VAS-AOD-512) is closed.** The containment high volume purge system meets GDC 60 and 61 requirements based on compliance with RG 1.140 and control of radioactive material release to environment."

Impact on R-COLA

COL Applicant item 9.4(7) must be addressed in the R-COLA.

Impact on S-COLA

COL Applicant item 9.4(7) must be addressed in the S-COLA.

Impact on PRA

There is no impact on the PRA.

Impact on Technical / Topical Reports

There is no impact on the Technical / Topical Reports.

RESPONSE TO REQUEST FOR ADDITIONAL INFORMATION

1/27/2012

US-APWR Design Certification

Mitsubishi Heavy Industries

Docket No. 52-021

RAI NO.:	**831-6030 REVISION 0**
SRP SECTION:	**09.04.03 -Auxiliary and Radwaste Area Ventilation System**
APPLICATION SECTION:	**DCD SECTIONS 9.4.3**
DATE OF RAI ISSUE:	**9/26/2011**

Question No. : 09.04.03-20

Follow-up RAI

This is a follow-up RAI to the in-sequence RAI 4845, Question 09.04.03-13 (ML102920331) and RAI 779-5865, Question No. 09.04.03-16 (ML11227A045)

The applicant responded to Part 5 of Question 09.04.03-13 and then subsequent Question 09.04.03-16. The applicant responded to Question 09.04.03-16 that there are check valves in the sump lines that would prevent backflow from the Auxiliary Building to the Turbine Building through this sump pump discharge pathway. Therefore, there would not be airflow from the Auxiliary Building to the Turbine Building through the interconnection via the non-radiological sump drain system. This level of detail is not shown in the simplified flow diagram in DCD Figure 9.3.3-1. No specific administrative controls are provided for the normally closed valve in the sump pump discharge line that isolates the Turbine Building sump from the Auxiliary Building sump.

The staff could find no mention of check valves in Revision 3 DCD section 9.3.3 "Equipment and Floor Drainage Systems" and their role in preventing an unmonitored release. The staff believes that such a description is warranted in section 9.3.3 to ensure that check valves are installed where appropriate to prevent unmonitored releases. In addition, Figure 9.3.3-1 labels valve from the Turbine Building sump discharge to the Auxiliary Building Waste Holdup Tank as failed closed (i.e. "FC"). Also, the staff believes that if "FC" or "LC" valves are displayed in this simplified flow diagram then the check valves needed to prevent an unmonitored release should also be displayed. These check valves are significant from a system performance perspective.

The staff requests that the applicant revise DCD section 9.3.3 and Figure 9.3.3-1 with the changes identified in the above paragraph.

ANSWER:

MHI will revise DCD Section 9.3.3 to provide a description of the check valve and add the check valve in the flow diagram in Figure 9.3.3-1. In addition, a typographical error in Figure 9.3.3-1 will be corrected.

Impact on DCD

DCD Revision 3 Tier 2 Subsection 9.3.3.1.2, fifth bullet, will be revised as follows (See Attachment-1):

" • The T/B drain system collects the non-radioactive floor and equipment drains in the non-radioactive drain sump. The liquid waste is sent to the [[WWS]]. In the unlikely event, that the fluid becomes radioactive, a radiation monitor determines the level of radioactive contamination. A measured concentration exceeding the predetermined setpoint activates an alarm in the MCR for operator actions and also activates the closure of the transfer valves. Following operator initiation, the contaminated waste is then sent to the A/B floor drain sump to be transferred to the LWMS. **There is a check valve in the sump line that will prevent backflow from the Auxiliary Building to the Turbine Building.**"

DCD Revision 3 Tier 2 Figure 9.3.3-1 (Sheet 1 of 2) will be revised as shown on the attached figure. (See Attachment-1)

Impact on R-COLA

There is no impact on the R-COLA.

Impact on S-COLA

There is no impact on the S-COLA.

Impact on PRA

There is no impact on the PRA.

Impact on Technical / Topical Reports

There is no impact on the Technical / Topical Reports.

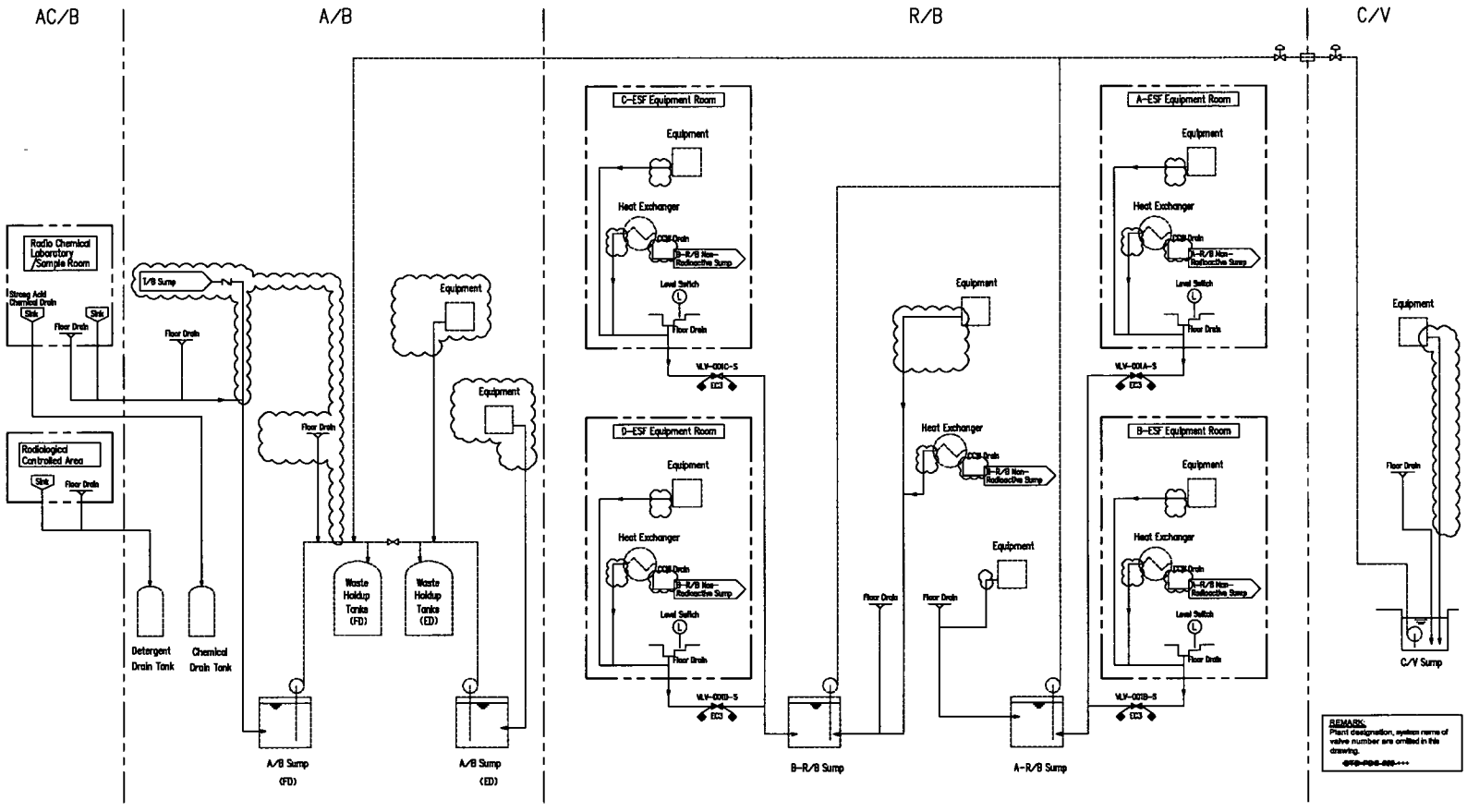

Figure 9.3.3-1 Equipment and Floor Drain System Flow Schematic Radiological Controlled Area (Sheet 1 of 2)

RESPONSE TO REQUEST FOR ADDITIONAL INFORMATION

1/27/2012

US-APWR Design Certification

Mitsubishi Heavy Industries

Docket No. 52-021

RAI NO.:	**831-6030 REVISION 0**
SRP SECTION:	**09.04.03 -Auxiliary and Radwaste Area Ventilation System**
APPLICATION SECTION:	**DCD SECTIONS 9.4.3**
DATE OF RAI ISSUE:	**9/26/2011**

Question No. : 09.04.03-21

Follow-up RAI (NRC RAI ID 6030, Q#22452)

This is a follow-up RAI to RAI 779-5865 Question No. 09.04.03-15. The staff reviewed the applicant's response and found it acceptable in that it adequately explained "the how" of maintaining ventilation flows from areas of low radioactivity to areas of potentially high radioactivity.

The applicant response to Question No. 09.04.03-15 read in part "...backdraft dampers are provided in the ventilation duct exhausting uncontrolled areas to prevent backflow from the auxiliary building HVAC system. The backdraft dampers are also provided in the supply duct to uncontrolled areas to prevent backflow when the auxiliary building HVAC system is stopped. DCD Subsection 9.4.3.2.1 will be revised to indicate that backdraft dampers are installed in supply lines to uncontrolled areas and exhaust lines from uncontrolled areas."

The applicant did make a commitment to revising DCD subsection 9.4.3.2.1 with words about the presence of system backdraft dampers. This is an NRC Confirmatory Item. The staff notes that Figure 1.7.4 "Legend for Piping and Instrumentation Diagrams of HVAC System" contains a symbol for backdraft dampers. The staff believes that the backdraft dampers should be displayed on Figure 9.4.3-1 "Auxiliary Building HVAC System Flow Diagram" since these dampers perform a necessary contamination control function and are significant from a system performance perspective.

The staff requests that the applicant also amend DCD Figure 9.4.3-1 to reflect the existence of these backdraft dampers.

ANSWER:

DCD Figure 9.4.3-1 is a simplified flow diagram and not all details of the system are intended to be shown. As a simplified flow diagram, not all of the branch ducts are shown and therefore all backdraft dampers that will be installed would not be indicated.

The statement regarding the location of backdraft dampers to be added to DCD Subsection 9.4.3.2.1, provided in response to RAI 779-5865, Question No. 09.04.03-15 (ML11227A045), is broadly applicable and inclusive of auxiliary building HVAC system branch ducts supplying or exhausting uncontrolled areas, whether these branches are shown on DCD Figure 9.4.3-1 or not.

Therefore, it is not practical or necessary to show the backdraft dampers on DCD Figure 9.4.3-1 to ensure that the dampers will be installed at the required locations.

Impact on DCD

There is no impact on the DCD.

Impact on R-COLA

There is no impact on the R-COLA.

Impact on S-COLA

There is no impact on the S-COLA.

Impact on PRA

There is no impact on the PRA.

Impact on Technical / Topical Reports

There is no impact on the Technical / Topical Reports.

7. Displays and controls identified in Table 2.7.5.4-2 are provided in the RSC.

8. The TSC HVAC system provides a habitable workspace environment for the TSC under normal operations, abnormal and accident conditions of the plant.

9. The auxiliary building HVAC system provides conditioned air to maintain area temperature within design limits in areas housing mechanical and electrical equipment (including areas housing ESF equipment) in the reactor building, power source building, auxiliary building and access building during normal plant operation.

10. The auxiliary building HVAC system ~~provides a flow rate that maintains a negative pressure in~~maintains exhaust airflow greater than supply airflow to provide control of the release of potentially radioactive airborne materials from the radiological controlled areas during normal operation. DCD_09.04.03-18

11. ~~Non-safety-related ABVS equipment and ductwork, including supports, whose failure could adversely interact with safety-related SSCs meet seismic Category II requirements~~Deleted. MIC-03-T1-00001

2.7.5.4.2 Inspections, Tests, Analyses, and Acceptance Criteria

Table 2.7.5.4-3 describes the inspections, tests analyses, and associated acceptance criteria for the ABVS.

Table 2.7.5.4-3 Auxiliary Building Ventilation System Inspections, Tests, Analyses, and Acceptance Criteria (Sheet 4 of 4)

Design Commitment	Inspections, Tests, Analyses	Acceptance Criteria	
10. The auxiliary building HVAC system ~~provides a flow rate that maintains a negative pressure in the~~maintains exhaust airflow greater than supply airflow to provide control of the release of potentially radioactive airborne materials from the radiological controlled areas during normal operation.	10. Tests and analyses of the as-built auxiliary building HVAC system will be performed.	10. A report exists and concludes that the as-built auxiliary building ~~exhaust fans provide a flow rate~~ HVAC system provides exhaust airflow ≥ ~~108,000 cfm to maintain~~ 216,000 cfm and that exhaust airflow is greater than supply airflow, with any two of three operating as-built auxiliary building exhaust fans. ~~a negative pressure in the radiological controlled areas.~~	DCD_09.04.03-16 DCD_09.04.03-18
11. ~~Non safety-related ABVS equipment and ductwork, including supports, whose failure could adversely interact with safety-related SSCs meet seismic Category II requirements~~Deleted.	11.i ~~Analysis will be performed to demonstrate that as-built non safety-related CVVS equipment and ductwork, including supports, does not adversely interact with safety-related SSCs during and after an SSE~~Deleted.	11.i ~~Reports exist and conclude that the as-built non safety-related ABVS equipment and ductwork, including supports, whose failure could adversely impact safety-related SSCs does not adversely interact with safety-related systems during and after an SSE~~Deleted.	MIC-03-T1-00001
	11.ii ~~Inspection will be performed to verify that the as-built non safety-related ABVS equipment and ductwork, including supports, are installed in accordance with the configurations specified by the analyses~~Deleted.	11.ii ~~The as-built non safety-related ABVS equipment and ductwork, including supports whose failure could adversely interact with safety-related SSCs are installed in accordance with the configurations specified by the analyses~~Deleted.	MIC-03-T1-00001

Two centrifugal charging pumps are provided to take suction from the VCT and return the cooled, purified reactor coolant to the RCS. The charging flow is pumped to the RCS through the regenerative HX, and injected into a cold leg of the reactor coolant system. A portion of the flow is directed to the RCPs through a seal water injection filter. An auxiliary pressurizer spray provides a means of cooling and depressurizing the pressurizer near the end of plant cooldown, when the RCPs, which normally provide the driving head for the pressurizer spray, are not operating. An excess letdown path is provided in the event that the normal letdown path is inoperable. The excess letdown flow path is also used to provide additional letdown capability during the final stages of plant heatup.

Changes in the RCS inventory due to load changes are accommodated primarily in the pressurizer. The VCT provides surge capacity for reactor coolant expansion not accommodated by the pressurizer. If the water level in the VCT exceeds the normal operating range, a three-way valve downstream of the reactor coolant filter diverts a portion of the letdown fluid to the BRS. The BRS recycles reactor coolant for the reuse of boric acid and primary makeup water. The system decontaminates the coolant by means of demineralization and gas stripping, and uses evaporation to separate and recover the boric acid and primary makeup water.

HVAC Systems - The MCR HVAC systems and the annulus emergency exhaust system have been previously described. The other HVAC systems are designed to provide the following functions:

- Provide proper environmental conditions within plant areas during normal operation and in accident conditions.
- Maintain airflow from areas of low radioactivity to areas of potentially higher radioactivity during normal operation.
- Limit concentration of airborne radioactivity to levels below the allowable values set by 10 CFR 20 by supplying and exhausting sufficient airflow during normal operation.
- ~~Minimize exfiltration from the areas with potential airborne radioactive contaminants by maintaining a slight negative pressure relative to the outside atmosphere~~Provide control of the release of potentially radioactive airborne materials from the controlled areas by maintaining exhaust airflow greater than supply airflow during normal operation. DCD_09.04.03-18

The safety related HVAC systems satisfy the following design requirements:

- The safety related HVAC systems can maintain proper environmental conditions within the safety related equipment areas during accident condition.
- The safety related HVAC systems perform the specified functions assuming a single active component failure.

Table 1.8-2 Compilation of All Combined License Applicant Items for Chapters 1-19 (Sheet 21 of 36)

COL ITEM NO.	COL ITEM
COL 9.2(30)	*The COL Applicant shall conduct periodic inspection, monitoring, maintenance, performance and functional testing of the ESWS and UHS piping and components, including the heat transfer capability of the CCW heat exchangers and essential chiller units, consistent with GL 89-13 and GL.89-13 Supplement 1. The COL Applicant is to develop operating procedures to periodically alternate the operation of the trains to ensure performance of all trains is regularly monitored.*
COL 9.2(31)	*The COL Applicant is to verify the system layout of the ESWS and UHS and is to develop operating procedures to assure that the ESWS and UHS are above saturation conditions for all operating modes.*
COL 9.2(32)	*The COL Applicant is to provide a void detection system with alarms to detect system voiding.*
COL 9.2(33)	*The COL Applicant is to provide the design details of the strainer blowdown line, vent line, and their discharge locations.*
COL 9.3(1)	*The COL Applicant is to provide the high pressure nitrogen gas, low pressure nitrogen gas, the hydrogen gas, carbon dioxide, and oxygen supply systems.*
COL 9.3(2)	*Deleted*
COL 9.3(3)	*Deleted*
COL 9.3(4)	*Deleted*
COL 9.3(5)	*Deleted*
COL 9.3(6)	*Deleted*
COL 9.3(7)	*Deleted*
COL 9.4(1)	*Deleted*
COL 9.4(2)	*Deleted*
COL 9.4(3)	*Deleted*
COL 9.4(4)	*The COL Applicant is to determine the capacity of cooling and heating coils provided in the air handling units that are affected by site specific conditions.*
COL 9.4(5)	*Deleted*
COL 9.4(6)	*The COL Applicant is to provide a system information and flow diagram of ESW pump area ventilation system if the ESW pump area requires the heating, ventilating and air conditioning.*
COL 9.4(7)	*The COL Applicant is to determine the frequency of performance of periodic auxiliary building HVAC system ventilation flow balancing.*
COL 9.5(1)	*The COL Applicant establishes a fire protection program, including organization, training and qualification of personnel, administrative controls of combustibles and ignition sources, firefighting procedures, and quality assurance.*

DCD_09.04.03-19

are sized to allow cleaning of blockages as specified in RG 4.21, "Minimization of Contamination and Radioactive Waste Generation: Life-Cycle Planning" (Ref. 9.1.7-28). A discussion of the design objectives and operational programs to address these radiological aspects of the system is contained in DCD Section 12.3.1. System and component design features addressing RG 4.21 (Ref. 9.1.7-28) are summarized in Table 12.3-8.

The refueling canal is connected on one side to the SFP. On its opposite side, the refueling canal connects to the spent fuel cask loading pit and to the fuel inspection pit. A weir and gate provide physical isolation of the refueling canal from each of the three pits. All the gates are located above the top elevation of the fuel seated in the spent fuel racks: they are normally closed and only opened as required.

The SFP is not connected to the equipment drain system (Subsection 9.3.3) to preclude unanticipated drainage.

SFP water level and temperature gauges, and an area radiation monitor in the fuel handling area are provided with alarms to the main control room (MCR) and locally.

Normal auxiliary building (A/B) HVAC system provides ventilation for the fuel handling area to ~~maintain the atmospheric pressure in this area slightly negative with respect to outside the building.~~provide control of the release of potentially radioactive airborne materials by maintaining exhaust airflow greater than supply airflow in this area. DCD_09.04.03-18

The spent fuel racks are composed of individual vertical cells, and several tiers of grid structures which interconnect each cell to rigidly maintain the cell array configuration. Each rack module is vertically supported by a base plate with 5 legs on the pit floor without anchoring. Additionally, each rack cell is vertically supported by a base plate on the pit floor without anchoring. The grid structures are designed such that a fuel assembly cannot be inserted between the cells.

Moderate density racks containing a neutron absorber material are provided in the SFP. Center-to-center spacing of the rack array is 11.1 inches to maintain the required degree of subcriticality as shown in Figure 9.1.2-2.

Materials used in rack construction are compatible with the SFP environment, and surfaces that come into contact with the fuel assemblies are made of annealed austenitic stainless steel, and are smooth (125AA) in accordance with the requirement of ANSI/ANS-57.2. Structural materials are corrosion resistant and will not contaminate the fuel assemblies or pit environment. Metamic is selected the neutron absorber material. Following program for monitoring the effectiveness of neutron poison by incorporating basic tests assures that the subcriticality requirements of the stored fuel array are maintained.

Purpose of Surveillance Program

The purpose of the surveillance program is to characterize certain properties of the Metamic with the objective of providing data necessary to assess the capability of the Metamic panels in the racks to continue to perform their intended function. The

- The floor drains in ESF area are capable to remove expected fire fighting water flow.
- ESF room drain isolation valves are also provided on the ESF room drain piping in order to protect against flooding due to backflow. These isolation valves are safety-related and serve safety-related function.
- The equipment and floor drainage systems are designed to be protected against flood (Refer to Chapter 3, Section 3.4) internally and externally generated missiles (Refer to Chapter 3, Section 3.5) and pipe ruptures (Refer to Chapter 3, Section 3.6).

9.3.3.1.2 Power Generation Design Bases

- The Radioactive drainage system and non-radioactive drainage system are separated, however, in case that radioactive water flows into non-radioactive system (e.g. CCW component failure), potentially radioactive contaminants are diverted from the non-radioactive drainage system to the LWMS. This is in conformance to the requirement of GDC 60.
- The LWMS collects potentially radioactive liquid wastes, at atmospheric pressure, from equipment and floor drainage in the containment vessel, R/B, A/B and access building. All such drainage is conveyed by gravity to sumps or tanks within the respective buildings and pumped to the waste holdup tanks.
- Chemical and other wastes collected from laboratory, decontamination solutions, and laboratory sinks drain to the chemical drain tank of the LWMS.
- The waste from hand and eyewash stations and the personnel decontamination shower facilities is collected in the detergent drain tank of the LWMS.
- The T/B drain system collects the non-radioactive floor and equipment drains in the non-radioactive drain sump. The liquid waste is sent to the [[WWS]]. In the unlikely event, that the fluid becomes radioactive, a radiation monitor determines the level of radioactive contamination. A measured concentration exceeding the predetermined setpoint activates an alarm in the MCR for operator actions and also activates the closure of the transfer valves. Following operator initiation, the contaminated waste is then sent to the A/B floor drain sump to be transferred to the LWMS. There is a check valve in the sump line that will prevent backflow from the Auxiliary Building to the Turbine Building. DCD_09.04.03-20
- Oily waste is collected by separate equipment and rooted to a separate floor drain sump tank. The separated oil is collected for offsite disposal.
- Sump pumps are designed to discharge at a flow rate adequate to preventing sump overflow for drain rate anticipated during normal plant operation and other anticipated drainage periods. Generally these sumps and sump tanks are provided with sufficient storage capacity consistent with sump pump operation.
- The equipment and floor drain systems and components are designed as equipment class 4, 5 and 6 as listed in Table 3.2-2, except for ESF rooms floor

DCD_09.04.
03-20

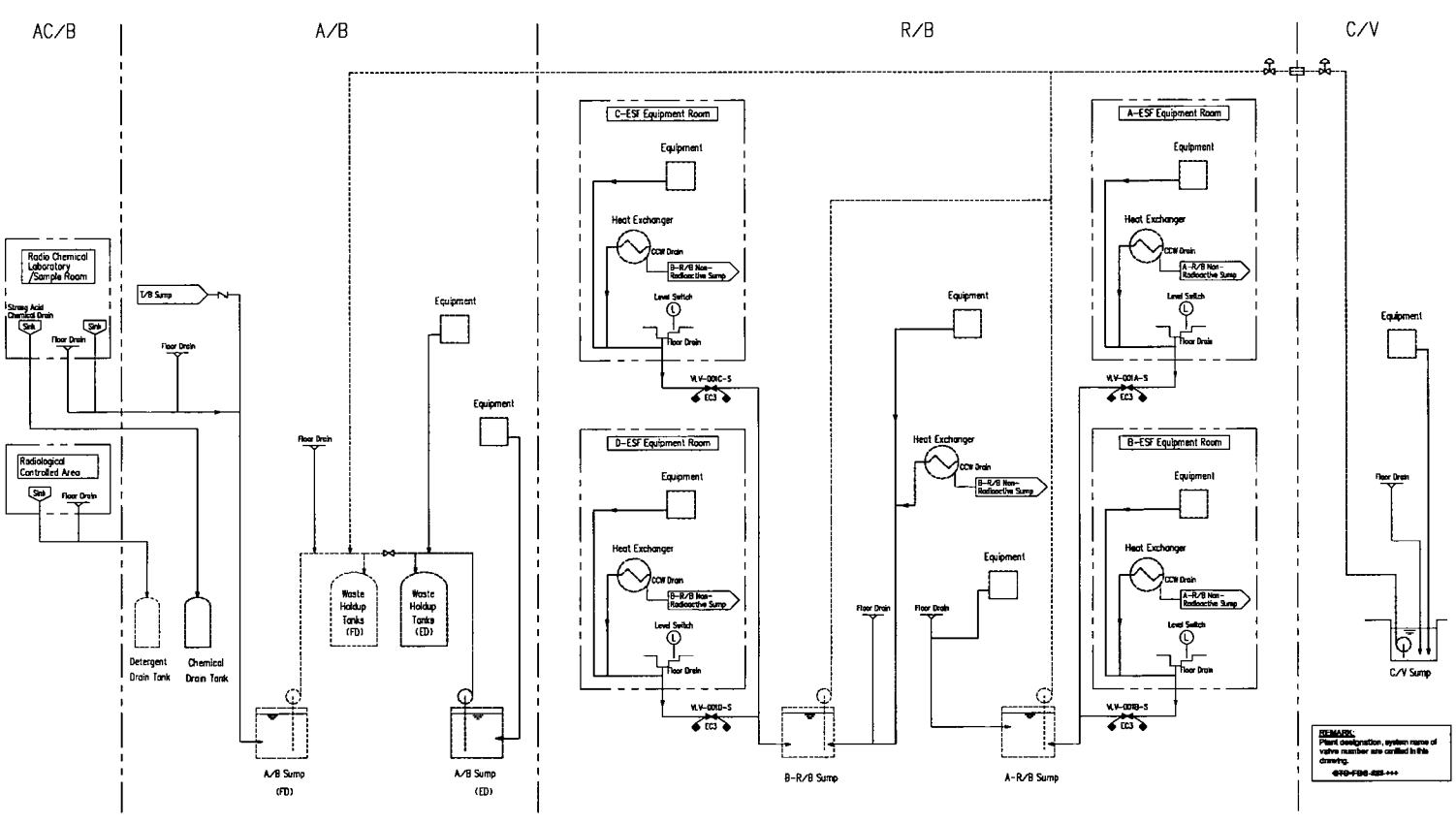

Figure 9.3.3-1 Equipment and Floor Drain System Flow Schematic Radiological Controlled Area (Sheet 1 of 2)

- During a design basis accident, the penetration and the safeguard component areas are isolated in order that operation of the annulus emergency exhaust system maintains a negative pressure and mitigates the release of airborne fission product to the atmosphere (Section 9.4.5).
- During a design basis accident, the auxiliary building HVAC system discharge duct is isolated in order to prevent backflow of discharge air from the annulus emergency exhaust system into the auxiliary building HVAC system.
- The isolation damper assemblies are designed to withstand the effect of adverse environmental conditions.
- The ductwork in the reactor building and power source building will be supported to prevent adverse interaction with other safety-related systems during a seismic event. Non-safety related equipment and ductwork within areas containing safety-related equipment are seismic Category II.

9.4.3.1.1.2 Non-Class 1E Electrical Room HVAC System

There are no safety design bases for the non-Class 1E electrical room HVAC system.

9.4.3.1.1.3 Main Steam/Feedwater Piping Area HVAC System

There are no safety design bases for the main steam/feedwater piping area HVAC system. However, Non-safety related equipment and ductwork within areas containing safety-related equipment are supported as seismic Category II.

9.4.3.1.1.4 Technical Support Center (TSC) HVAC System

There are no safety design bases for the TSC HVAC system.

9.4.3.1.2 Power Generation Design Bases

9.4.3.1.2.1 Auxiliary Building HVAC system

The auxiliary building HVAC system is designed to satisfy the following design bases:

- Provide and maintain proper operating environment within the required temperature range (Table 9.4-1) for areas housing mechanical and electrical equipment within the A/B, R/B, PS/B and AC/B during normal plant operation.
- Keep dose levels due to the airborne radioactivity in normally occupied areas below the allowable values set by 10 CFR 20 by supplying and exhausting sufficient airflow.
- Control exhaust fan airflow continuously and automatically at a predetermined value to ~~maintain a slightly negative pressure in~~provide control of the release of potentially radioactive airborne materials from the controlled areas within A/B, R/B and AC/B relative to the outside atmosphere~~. This minimizes exfiltration from the~~ DCD_09.04.03-18

~~radiological controlled areas~~ by maintaining exhaust airflow greater than supply airflow during normal plant operation. DCD_09.04.03-18

- Maintain airflow from areas of low radioactivity to areas of potentially higher radioactivity.
- Provide accessibility to system components for adjustment, maintenance and periodic inspection and testing of the system's equipment and components to assure proper equipment function and reliability and system availability.
- The auxiliary building HVAC system and containment low volume purge system are cross connected to allow the exhaust from the radiological controlled areas to be filtered by the containment low volume purge exhaust filtration units.
- Airborne radioactivity is monitored inside the exhaust air duct from the controlled areas (Subsection 12.3.4.2.8).

9.4.3.1.2.2 Non-Class 1E Electrical Room HVAC System

The non-Class 1E electrical room HVAC system is designed to satisfy the following design bases:

- Provide and maintain the room ambient conditions within the required temperature range (Table 9.4-1) to support the continuous operation of the electrical equipment and components.
- Maintain the hydrogen concentration below 1% by volume of battery room.
- Provide accessibility to system components for adjustment, maintenance and periodic inspection and testing of the system equipment and components to assure proper equipment function, reliability and system availability.

9.4.3.1.2.3 Main Steam/Feedwater Piping Area HVAC System

The main steam/feedwater piping area HVAC system is designed to satisfy the following design bases:

- Provide and maintain proper environmental conditions within the required temperature range (Table 9.4-1) suitable to support the operation and assure the reliability of the electrical and mechanical components.
- Provide accessibility to system components for adjustment, maintenance and periodic inspection and testing of the system equipment and components to assure proper equipment function and reliability and system availability.

9.4.3.1.2.4 Technical Support Center (TSC) HVAC System

The TSC HVAC system is designed to satisfy the following design bases:

- Exclude entry of airborne radioactivity into the TSC envelope and remove radioactive material from the TSC envelope environment such that radiation doses to personnel are within the requirements of GDC 19 (10 CFR 50, Appendix A).
- Provide and maintain proper environmental conditions within the required temperature range (Table 9.4-1) to assure personnel comfort and to support the operation of the control and instrumentation equipment and components.
- Support and maintain TSC habitability and permit personnel occupancy following plant emergency conditions.
- Provide accessibility to system components for adjustment, maintenance and periodic inspection and testing of the system components to assure proper equipment function and reliability and system availability.
- The TSC emergency filtration unit is designed and constructed in accordance with ASME standard N509 (Ref. 9.4.8-1), AG-1 (Ref. 9.4.8-2) and with the recommendations of RG 1.140 (Ref. 9.4.8-15).

9.4.3.2 System Description

9.4.3.2.1 Auxiliary Building HVAC System

The auxiliary building HVAC system is shown in Figure 9.4.3-1 and equipment and design data for the system are presented in Table 9.4.3-1. The COL Applicant is to determine the capacity of cooling and heating coils that are affected by site specific conditions. The auxiliary building HVAC system does not serve any safety function, with the exception of the safety-related isolation dampers such as penetration area supply and exhaust line isolation dampers, safeguard component area supply and exhaust isolation dampers and auxiliary building exhaust line isolation dampers. Therefore, the auxiliary building HVAC system is not safety-related. Non-safety related equipment and ductwork within areas containing safety-related equipment are supported as seismic Category II and the safety-related isolation dampers and associated ductwork are seismic Category I. The system is of a once through type, and consists of supply and exhaust air systems. The supply air system includes two auxiliary building air handling units, each is sized for 50% of the total system airflow and consists of, in the direction of airflow, a low efficiency pre-filter, a medium efficiency filter, a steam heating coil, a chilled water cooling coil, a supply fan and associated controls. The cooling coil of each air handling unit is supplied with chilled water from the non-essential chilled water system (Section 9.2.7). Both air handling units are connected to a common air distribution ductwork through discharge air isolation dampers.

The exhaust airflows from the served areas are drawn through air ductwork, by three auxiliary building exhaust fans, each sized for 50% of the total system airflow. Each exhaust fan is equipped with an isolation damper and discharge ductwork leading to the vent stack. The exhaust fan and associated isolation damper are interlocked to close the damper when the exhaust fan is not in operation, preventing backflow into the auxiliary building HVAC system. DCD_09.04.03-19

The penetration of the penetration and safeguard component area and the discharge duct of the auxiliary building HVAC system are provided with safety-related isolation dampers that automatically close upon receipt of the ECCS actuation signal. The penetration and safeguard component area supply and exhaust line isolation damper assemblies, and the auxiliary building HVAC system exhaust line isolation damper assemblies are equipment class 2, seismic category I.

There is no separate spent fuel pool ventilation system. The fuel handling area in the reactor building is serviced by the auxiliary building HVAC system. There are supply and exhaust ductwork branches from the auxiliary building HVAC system that enter into the fuel handing area. The exhaust air duct from the fuel handling area is monitored for airborne radioactivity (Subsection 12.3.4.2.8).

During normal plant operation, the two air handling units and two exhaust fans are placed into operation. The total supply airflow of two air handling units is 196,000 ft^3/min and the total exhaust airflow of two exhaust fans is ~~208,000~~216,000 ft^3/min. Upon energizing the air handling unit, its isolation dampers automatically open. Upon energizing the two exhaust fans, their airflow is continuously and automatically controlled at a predetermined value to ~~maintain a slightly negative pressure in~~provide control of the release of potentially radioactive airborne materials from the controlled areas within A/B, R/B, including the fuel handling area, and AC/B ~~to minimize exfiltration from the radiological controlled areas~~. The design exhaust flowrate is maintained with or without the low volume or high volume containment purge exhaust in operation. The fuel handling area is supplied airflow of 21,800 ft^3/min from auxiliary building HVAC system air handling units and exhausts an airflow of 24,000 ft^3/min from this area. The airflow to radiological controlled area is adjusted by the balancing damper located in supply and exhaust duct branch throughout the system. Backdraft dampers are provided in the ventilation duct supplying and exhausting uncontrolled areas to prevent backflow from the auxiliary building HVAC system.

DCD_09.04.03-16

DCD_09.04.03-18

DCD_09.04.03-15

In summer, the outside supply airflow is cooled by the air handling unit's chilled water cooling coil. Upon supply air temperature rise, as sensed by thermostats located in the supply air duct, the air handling unit's chilled water control valves allow for an increase in the chilled water flow through the cooling coils.

In winter, the supply air is heated by the air handling unit steam heating coil to maintain the supply air temperature at the design set point. Supplemental heating with local unit heaters or in-duct heaters, that are non-safety related equipment and locally installed, is provided in areas with higher heat loss, due to their proximity to exterior walls.

Airborne radioactivity is monitored inside the exhaust air duct from the fuel handling area, penetration and safeguard component area, R/B controlled area, A/B controlled area, and sampling/laboratory area (AC/B controlled area) (Subsection 12.3.4.2.8). An alarm will be actuated in the MCR when the radiation levels exceed a predetermined value. If this event occurs, the normal supply and exhaust from the affected area is manually isolated, remotely from the MCR, and the exhaust flow is manually diverted, remotely from the MCR, to the containment low volume purge filtration exhaust system (Section 9.4.6) for the following areas: the penetration and safeguard component area, fuel handling area, R/B controlled area, A/B controlled area, and sampling/laboratory area. The airflow from

in accordance with the Air Conditioning and Refrigeration Institute Standards (Ref.9.4.8-21, Ref.9.4.8-22, Ref.9.4.8-23).

Air distribution ductwork is leak-tested in accordance with the Sheet Metal Air Conditioning Contractors' National Association (Ref.9.4.8-24, Ref.9.4.8-25) and ASME N510 (Ref.9.4.8-8), and ASME AG-1 Section SA and TA (Ref.9.4.8-2).

System instruments are periodically calibrated and automatic controls are tested for activation at the design setpoints, in conformance with the design sequence of operation at all system operating modes.

9.4.3.4.1 Auxiliary Building HVAC System

In addition to the general requirements in Subsection 9.4.3.4, the auxiliary building HVAC system safety-related isolation dampers are inspected periodically and the damper seats are replaced as required and tested in accordance with technical specification surveillance requirement for the annulus emergency exhaust system. The auxiliary building HVAC system ventilation flow balancing also is inspected periodically such that an unmonitored release will not occur under credible worst-case ventilation balance conditions. The COL applicant is to determine the frequency of performance of periodic auxiliary building HVAC system ventilation flow balancing. DCD_09.04.03-19

9.4.3.4.2 Non-Class 1E Electrical Room HVAC System

In addition to the general requirements in Subsection 9.4.3.4, battery fan operation is tested to insure automatic operation of the standby fan upon the airflow failure of the activated fan.

9.4.3.4.3 Main Steam/Feedwater Piping Area HVAC System

The general requirements of Subsection 9.4.3.4 apply.

9.4.3.4.4 Technical Support Center (TSC) HVAC System

In addition to the general requirements in Subsection 9.4.3.4, the emergency flirtation unit is factory-tested for housing leakage, filter bypass leakage, and airflow performance. Periodically and subsequent to each HEPA filter or charcoal adsorber material replacement, the unit is inspected and tested in-place in accordance with the requirements of RG 1.140 (Ref. 9.4.8-15), ASME N510 (Ref. 9.4.8-8) and ASME AG-1 (Ref. 9.4.8-2). The HEPA filter is checked periodically and charcoal adsorber samples are tested for efficiency in an independent laboratory in accordance with RG 1.140 and ASTM D 3803 (Ref. 9.4.8-9).

9.4.3.5 Instrumentation Requirements

9.4.3.5.1 Auxiliary Building HVAC System

The instrumentation serving the auxiliary building HVAC system includes:

- Indication of outlet airflow of air handling units and exhaust fan, and airflow failure alarms.

9.4.6.2.4 Containment Purge System

The containment purge system consists of the following systems:

- Containment low volume purge system
- Containment high volume purge system

9.4.6.2.4.1 Containment Low Volume Purge System

The containment low volume purge system is shown in Figure 9.4.6-1 and the equipment design data is presented in Table 9.4.6-1. The COL Applicant is to determine the capacity of cooling and heating coils that are affected by site specific conditions. With the exception of the containment isolation valves that are safety-related and seismic category I, the containment low volume purge system does not serve any safety function. Therefore, it is not safety-related. Non-safety related equipment and ductwork, including supports, in areas containing safety-related are seismic Category II to prevent adverse interaction with safety-related systems during a seismic event.

The containment low volume purge system consists of two containment low volume purge air handling units and two exhaust filtration units, isolation valves, dampers, ductwork and associated instrumentation and controls.

The containment penetration and the containment isolation valves are constructed of fire rated material and as a fire barrier and are equivalent to any fire rated damper. This configuration will prevent the spread of fire from on fire area to another fire area.

This ventilation system contains ductwork in the auxiliary building and reactor building and there will be some penetration through fire barriers. Therefore, fire dampers are installed where ductwork penetrates a fire rated barrier.

Each air handling unit consists of, in the direction of airflow, a low efficiency filter, a high efficiency filter, an electric heating coil, a chilled water cooling coil, and a supply fan. Each unit is sized for 100% capacity. Outside air is drawn and conditioned by the air handing unit and discharged into the containment through the containment low volume purge system penetration.

The supply air to the containment is dehumidified and tempered to minimize the condensation on the cooling coils for the containment fan cooler units and the CRDM cooling unit, and on the supply air duct inside the containment. The capacity of the heating and cooling coils is determined by the ambient design outside dry and wet bulb temperature condition.

Each containment low volume purge exhaust filtration unit consists of, in the direction of airflow, a high efficiency filter, an electric heating coil, a HEPA filter, a charcoal adsorber, a high efficiency filter, and an exhaust fan. Each unit is sized for 100% capacity. The containment air is drawn through the containment low volume purge system penetration by the exhaust filtration unit and discharged to the atmosphere through the plant vent stack. The ductwork in the containment low volume purge exhaust filtration unit discharge flowpath is rated for pressure and flow conditions resulting from exhaust fan operation in DCD_09.04.03-19

combination with high containment pressure of 2 psig. The filtration unit is interlocked with the auxiliary building HVAC exhaust line (plant vent) isolation dampers to prevent fan operation when one of the two series dampers (i.e. VAS-AOD-511 or VAS-AOD-512) is closed. DCD_09.04.03-19

These containment low volume purge exhaust filtration units are cross connected to the auxiliary building ventilation system (Subsection 9.4.3.2.1) with the following areas, fuel handling area, penetration and safeguard component area, and controlled area of the reactor building, auxiliary building, and access building. Radiation monitors in the normal exhaust ducts (Subsection 12.3.4.2.8) from these areas will alarm in the MCR upon detecting high radiation. In this event, operators will manually isolate normal ventilation to the impacted area, and redirect exhaust airflow to these containment low volume purge exhaust filtration units. This minimizes the potential spread of radioactive contamination for the areas serviced by the auxiliary building HVAC system. ~~When~~Before exhaust from the auxiliary building HVAC system is ~~filtered by~~ aligned to the containment low volume purge exhaust filtration unit, the containment low volume purge system containment isolation valve is manually closed and the containment low volume purge supply fan is manually stopped. DCD_09.04.03-14

The containment low volume purge system meets the GDC 60 and 61 requirements based on compliance with RG 1.140 and control of radioactive material releases to environment. However, based on the results of the fuel handling accident analysis presented in DCD Section 15.7.4 with no credit given for any filtration of released radionuclides, the calculated offsite doses remain well within the guideline dose limit values of 10 CFR 50.34.

The capacity of the containment low volume purge system is sized to maintain acceptably low levels of radioactivity, including noble gases, during normal plant operation.

The containment area includes four radiation monitors that are part of the Area Radiation Monitoring System (ARMS) described in Section 12.3.4.1. The monitors provide detection of radioactivity due to airborne particulate within the circulating air of the containment. Following the detection of high levels of radioactivity by any of the four radiation monitors, alarms are indicated in the main control room and the containment isolation valves on the containment low volume purge system is automatically closed.

The containment radiation monitors RMS-RE-040 and 041 described in Subsection 11.5.2.2.1 provide a means for detection of unidentified leakage into the containment atmosphere from the reactor coolant pressure boundary (RCPB). When the unidentified leakage rates increases, alarms are initiated in the MCR and a containment purge isolation signal is generated. Upon receipt of the isolation signal, the containment low volume purge system containment isolation valves are automatically close. The radiation monitors are required in normal operation as described in DCD Subsection 5.2.5.4.

9.4.6.2.4.2 Containment High volume Purge System

The containment high volume purge system is shown in Figure 9.4.6-1 and the equipment design data is presented in Table 9.4.6-1. The COL Applicant is to determine the capacity of cooling and heating coils that are affected by site specific conditions. With the exception of the containment isolation valves, that are safety related and seismic

category I, the containment high volume purge system does not serve any safety function. Therefore, it is not safety-related. Non-safety related equipment and ductwork, including supports, in areas containing safety-related equipment are seismic Category II to prevent adverse interaction with safety-related systems during a seismic event.

The containment high volume purge system consists of a containment high volume purge air handling unit and an exhaust filtration unit, isolation valves dampers, ductwork and associated instrumentation and controls.

The containment penetration and the containment isolation valves are constructed of fire rated material and as a fire barrier and are equivalent to any fire rated damper. This configuration will prevent the spread of fire from on fire area to another fire area.

This ventilation system contains ductwork in the auxiliary building and reactor building and there will be some penetration through fire barriers. Therefore, fire dampers are installed where ductwork penetrates a fire rated barrier.

The air handling unit consists of, in the direction of airflow, a low efficiency filter, a high efficiency filter, an electric heating coil, a chilled water cooling coil, and a supply fan. Outside air is drawn and conditioned by the air handing unit and discharged into the containment through the containment high volume purge system penetration.

The exhaust filtration unit consists of, in the direction of airflow, a high efficiency filter, a HEPA filter, and an exhaust fan. The containment air is drawn through the containment high volume purge system penetration by the exhaust filtration unit and discharged to the atmosphere through the plant vent stack. The ductwork in the containment high volume purge exhaust filtration unit discharge flowpath is rated for pressure and flow conditions resulting from exhaust fan operation. The filtration unit is interlocked with the auxiliary building HVAC exhaust line (plant vent) isolation dampers to prevent fan operation when one of the two series dampers (i.e. VAS-AOD-511 or VAS-AOD-512) is closed. The containment high volume purge system meets GDC 60 and 61 requirements based on compliance with RG 1.140 and control of radioactive material release to environment. DCD_09.04.03-19

The capacity of the containment high volume purge system is sized to maintain acceptably low levels of radioactivity, including noble gases, during refueling operations.

The containment area includes four radiation monitors that are part of the Area Radiation Monitoring System (ARMS) described in Section 12.3.4.1. The monitors provide detection of radioactivity due to airborne particulate within the circulating air of the containment. Following the detection of high levels of radioactivity by any of the four radiation monitors, alarms are indicated in the main control room and the containment isolation valves on the containment high volume purge system is automatically closed.

The containment radiation monitors RMS-RE-040 and 041 described in Subsection 11.5.2.2.1 provide a means for detection of unidentified leakage into the containment atmosphere from the reactor coolant pressure boundary (RCPB). When the unidentified leakage rates increases, alarms are initiated in the MCR and a containment purge isolation signal is generated. Upon receipt of the isolation signal, the containment high volume purge system containment isolation valves are automatically close. The radiation monitors are required in normal operation as described in DCD Subsection 5.2.5.4.

9.4.7 Combined License Information

COL 9.4(1) *Deleted*

COL 9.4(2) *Deleted*

COL 9.4(3) *Deleted*

COL 9.4(4) *The COL Applicant is to determine the capacity of heating coils provided in the safety-related HVAC system and the capacity of cooling and heating coils provided in the non-safety related HVAC system air handling units that are affected by site specific conditions.* DCD_09.02.02-72

COL 9.4(5) *Deleted*

COL 9.4(6) *The COL Applicant is to provide a system information and flow diagram of ESW pump area ventilation system if the ESW pump area requires the heating, ventilating and air conditioning.*

COL 9.4(7) *The COL Applicant is to determine the frequency of performance of periodic auxiliary building HVAC system ventilation flow balancing.* DCD_09.04.03-19

9.4.8 References

9.4.8-1 "Nuclear Power Plant Air-Cleaning Units and Components," ASME N509-1989.

9.4.8-2 "Code on Nuclear Air and Gas Treatment," ASME AG-1-2003.

9.4.8-3 "Design, Inspection, and Testing Criteria for Air Filtration and Adsorption Units of Post-Accident Engineered-Safety-Feature Atmosphere Cleanup Systems in Light-Water-Cooled Nuclear Power Plans," Regulatory Guide (RG) 1.52, Revision 3.

9.4.8-4 "Methods and Assumptions for Evaluating Radiological Consequences of Design Basis Accidents at Light-Water Nuclear Power Reactors," Regulatory Guide (RG) 1.195.

9.4.8-5 "Alternative Radiological Source Terms for Evaluating Design Basis Accidents at Nuclear Power Reactors," Regulatory Guide (RG) 1.183.

9.4.8-6 "Demonstrating Control Room Envelope Integrity at Nuclear Power Reactors," Regulatory Guide (RG) 1.197.

9.4.8-7 Deleted

9.4.8-8 "Testing of Nuclear Air-Cleaning Units and Components," ASME N510-1989.

9.4.8-9 "Standard Test Method for Nuclear-Grade Activated Carbon," ASTM D 3803-91 (2004).

- The dose to control room personnel shall not exceed the limits specified in GDC 19 of Appendix A to 10 CFR 50 (Reference 12.3-8) following the DBAs described in Chapter 15, Subsection 15.6.5.5.

12.3.3.3 Design Features

To accomplish the design objectives and to conform to the design criteria, the following design guidelines are employed wherever practicable.

- Guidelines to minimize airborne radioactivity:

  Access control and traffic patterns are considered in the basic plant layout to minimize the spread of contamination.

  Equipment vents and drains are piped directly to a collection device connected to the collection system. This is to prevent any contaminated fluid from flowing across the floor to a floor drain.

  Welded piping systems are employed on systems containing highly radioactive fluids to the maximum extent practicable.

  Suitable coatings are applied to the concrete floors and walls of potentially contaminated areas to facilitate decontamination.

  Diaphragm or bellows seal valves are used on those systems where essentially no leakage can be tolerated.

  The design of the equipment incorporates features that minimize the spread of radioactivity during maintenance operations.

  Ventilation openings, in areas where flooding might occur, are located so that water entry in not possible.

  HEPA filters are specified not to fail for at least 20 inches wg differential pressure across them. Ventilation systems containing HEPA filters have fans with static pressure capacities well below 20 inches wg.

- Guidelines to control airborne radioactivity:

  The airflow is directed from areas with lesser potential for contamination to areas with greater potential for contamination.

  In building compartments with a potential for contamination, the exhaust is designed for greater volumetric flow than is supplied to that area. This ~~minimizes the amount of uncontrolled exfiltration from~~provides control of the release of potentially radioactive airborne materials from the area. DCD_09.04.03-18

  Consideration is given to the possible disruption of normal airflow patterns by maintenance operations, and provisions are made in the design to prevent adverse airflow direction.

Table 12.3-8 Regulatory Guide 4.21 Design Objectives and Applicable DCD Subsection Information for Minimizing Contamination and Generation of Radioactive Waste (Sheet 29 of 62)

Objective		System Features	DCD Reference
		- The auxiliary building HVAC system discharge duct is isolated in order to prevent backflow of discharge air from the annulus emergency exhaust system into the auxiliary building HVAC system.	9.4.3.1.1.1
		- The ventilation systems in potentially contaminated areas maintain airflow from areas of low radioactivity to areas of potentially higher radioactivity.	9.4.3.1.2.1 12.3.3.3
		- The auxiliary building HVAC system controls exhaust fan airflow continuously and automatically at a predetermined value higher than the supply fan airflow to ~~maintain a slightly negative pressure in~~provide control of the release of potentially radioactive airborne materials from the controlled areas ~~relative to the outside atmosphere. This minimizes exfiltration from the radiological controlled areas~~ during normal plant operation. The exhaust airflow through the plant's vent stack is a radiologically monitored path.	9.4.3.1.2.1 12.3.3.3
		- Upon receipt of the ECCS actuation signal, the auxiliary building HVAC system discharge duct is automatically isolated by the equipment class 2, seismic category I isolation dampers in order to prevent backflow of discharge air from the annulus emergency exhaust system into the auxiliary building HVAC system.	9.4.3.3.1
		- Ventilation ducts are designed to minimize the buildup of radioactive contamination within the ducts.	12.3.3.3
		- Air cleaning systems are utilized.	12.3.3.3
		- The HVAC system design facilitates the replacement of the filter elements.	12.3.1.1.1.2.K
		- The tanks vent line is either open to the cubicle or connected directly to the ventilation system.	12.3.1.1.1.2.E

DCD_09.04.03-18

Table 12.3-8 Regulatory Guide 4.21 Design Objectives and Applicable DCD Subsection Information for Minimizing Contamination and Generation of Radioactive Waste (Sheet 30 of 62)

Objective		System Features	DCD Reference
2	Provide for adequate leak detection capability to provide prompt detection of leakage for any structure, system, or component which has the potential for leakage.	The auxiliary building HVAC system controls exhaust fan airflow continuously and automatically at a predetermined value higher than the supply fan airflow to ~~maintain a slightly negative pressure in~~provide control of the release of potentially radioactive airborne materials from the controlled areas ~~relative to the outside atmosphere. This minimizes exfiltration from the radiological controlled areas~~ during normal plant operation. The exhaust airflow through the plant's vent stack is a radiologically monitored path.	9.4.3.1.2.1 12.3.3.3
		Airborne radiation monitors in the exhaust ductwork from areas like the fuel handling area, reactor building controlled areas, auxiliary building controlled areas and access control building areas will alarm in the control room. The control room operators will remotely from the control room manually isolate the supply and exhaust ductwork from the areas as needed and redirect airflow to the containment low volume purge exhaust system, filters, which are then vented through the plant vent stack, during normal plant operation. The exhaust airflow through the plant's vent stack is a radiologically monitored path.	9.4.3.2.1 12.3.4.2

DCD_09.04.03-18

Table 12.3-8 Regulatory Guide 4.21 Design Objectives and Applicable DCD Subsection Information for Minimizing Contamination and Generation of Radioactive Waste (Sheet 32 of 62)

Objective		System Features	DCD Reference
4	Reduce the need to decontaminate equipment and structures by decreasing the probability of any release, reducing any amounts released, and decreasing the spread of the contaminant from the source.	Upon receipt of the ECCS actuation signal, the penetration and the safeguard component areas are automatically isolated by the equipment class 2, seismic category I isolation dampers in order that operation of the annulus emergency exhaust system maintains a negative pressure and mitigates the release of airborne fission products to the atmosphere. This low probability of release decreases need to decontaminate equipment and structures, and ensures contaminants do not spread from the source.	9.4.3.3.1 9.4.5.1.1.1 9.4.5.2.1 12.3.3.3
		The auxiliary building HVAC system controls exhaust fan airflow continuously and automatically at a predetermined value higher than the supply fan airflow to ~~maintain a slightly negative pressure in~~provide control of the release of potentially radioactive airborne materials from the controlled areas relative to the outside atmosphere~~. This minimizes exfiltration from the radiological controlled areas~~ during normal plant operation. The exhaust airflow through the plant's vent stack is a radiologically monitored path.	9.4.3.1.2.1 9.4.3.2.1 12.3.3.3
		The containment low volume purge system during normal plant operation maintains the pressure inside containment. This air is treated through a HEPA and charcoal absorber filter and vented through the plant stack, which is a radiologically monitored path.	

DCD_09.04.03-18