UNITED STATES
NUCLEAR REGULATORY COMMISSION
ADVISORY COMMITTEE ON REACTOR SAFEGUARDS
WASHINGTON, DC 20555 - 0001

August 29, 2011

MEMORANDUM TO: ACRS Members

FROM: Girija Shukla, Senior Staff Engineer ***/RA/***
Technical Support Branch
Advisory Committee on Reactor Safeguards

SUBJECT: CERTIFICATION OF THE MINUTES OF THE MEETING OF THE SUBCOMMITTEE ON PLANT OPERATIONS AND FIRE PROTECTION ON JULY 12, 2011

The minutes for the subject meeting were certified on August 17, 2011, as the official record of the proceedings of that meeting. A copy of the certified minutes is attached.

Attachment: As stated

cc: w/o Attachment:
E. Hackett
C. Santos
Y. Diaz-Sanabria

cc: w/ Attachment: ACRS Members

UNITED STATES
NUCLEAR REGULATORY COMMISSION
ADVISORY COMMITTEE ON REACTOR SAFEGUARDS
WASHINGTON, DC 20555 - 0001

August 17, 2011

MEMORANDUM TO: Harold B. Ray, Chairman
Operations and Fire Protection Subcommittee
Advisory Committee on Reactor Safeguards

FROM: Girija Shukla, Senior Staff Engineer **/RA/**
Technical Support Branch
Advisory Committee on Reactor Safeguards

SUBJECT: MINUTES OF THE MEETING OF THE SUBCOMMITTEE ON PLANT OPERATIONS AND FIRE PROTECTION ON JULY 12, 2011

A copy of the minutes for the subject meeting is attached for your review. Please review them and provide your comment at your earliest convenience. Please send me your comments and changes for incorporation. If you are satisfied with these minutes, please sign, date, and return the attached certification letter.

Attachments:
1. Certification Letter
2. Meeting Minutes

cc: Subcommittee Members
Y. Diaz-Sanabria
C. Santos

UNITED STATES
NUCLEAR REGULATORY COMMISSION
ADVISORY COMMITTEE ON REACTOR SAFEGUARDS
WASHINGTON, DC 20555 - 0001

August 17, 2011

MEMORANDUM TO: Girija Shukla, Senior Staff Engineer
Technical Support Branch
Advisory Committee on Reactor Safeguards

FROM: Harold Ray, Chairman
Operations and Fire Protection Subcommittee **/RA/**
Advisory Committee on Reactor Safeguards

SUBJECT: CERTIFICATION OF THE MINUTES OF THE MEETING OF THE SUBCOMMITTEE ON PLANT OPERATIONS AND FIRE PROTECTION ON JULY 12, 2011

I hereby certify, to the best of my knowledge and belief, that the minutes of the subject meeting held on July 12, 2011, are an accurate record of the proceedings for that meeting.

_____/RA/_____8/17/2011_____
Harold Ray, Chairman Date Plant Operations and Fire Protection Subcommittee

Certified: August 17, 2011 **Issued: August 17, 2011**
By: Mr. Harold Ray

ADVISORY COMMITTEE ON REACTOR SAFEGUARDS
MINUTES OF THE PLANT OPERATIONS AND FIRE PROTECTION
SUBCOMMITTEE MEETING, JULY 12, 2011

On July 12, 2011, the ACRS Subcommittee on Plant Operations and Fire Protection held a meeting in Room T-2B1, 11545 Rockville Pike, Rockville, Maryland. The meeting was convened at 8:30 AM and adjourned around 12:00 PM the same day. The meeting was open to the public. No written comments or requests for time to make oral statements were received from members of the public related to this meeting.

ATTENDEES:

ACRS Members
Harold Ray (Chairman)
John Stetkar
Charles Brown
Jack Sieber
Sam Armijo
Dennis Bley
Mike Ryan
Said Abdel-Khalik

ACRS Staff
Girija Shukla (DFO)

TVA
David Stinson
Ed Freeman
Frank Koontz
Steve Hilms
Bill Crouch
Gordon Arent
Erin West
Kirk Peterman
Pete Olson
Mark Clark

Westinghouse
Kris Cummings
Warren Gillett

NRC Staff
Justin Pool, NRR
Norbert Carte, NRR
Anthony Attard, NRR
Pat Milano, NRR
Allen Howe, NRR
L. Raghavan, NRR
Steve Campbell, NRR
Gush Singh, NRR
Fred Lyon, NRR
Samir Darbal, NRR
Tim Mossonvi, NRR
John Lamb, NRR
David Rahn, NRR
Joshua Kaizon, NRR
Arthur Heller, NRR
Anthony Mendiola, NRR
Bruce Bavol, NRR
Tommy Lazario, Region II

SUMMARY OF MEETING

The purpose of the meeting was to review and discuss the status of construction, inspection, and licensing activities related to Watts Bar Nuclear Plant Unit 2 (WBN 2). The meeting transcripts are attached and contain an accurate description of each matter discussed during the meeting. The presentation slides used during the meeting are attached to these transcripts. Following are the significant issues and topics discussed in the meeting.

Significant Issues/Topics Discussed	Link of Pages in Transcript
TVA Discussion of I&C for Watts Bar Unit 2 (Chapter 7)	Page 9, Line 17
TVA I & C Modifications	Page 9, Line 24
In the I&C design development, a philosophy was established to try to maintain close similarity between Unit 1 and 2 in the safety actuation area. For the safety actuation systems, the digital and analog platforms were maintained the same for both units, whereever possible. There is one small change, which involved an analog to analog conversion. Modifications to hardware were only made due to obsolescence of components, generally involving the board level type changes, such as IC chips.	Page 9, Line 24
Safety Related I&C Systems	Page 11, Line 3
There is a need for more diagrams to illustrate the design details.	Page 15, Line 5
Are the Unit 1 circuit boards coated? The original boards on Unit 1 have conformal coating, but they are being replaced, the circuit boards will no longer have conformal coating.	Page 17, Line 19
What has been the Westinghouse operating experience, in particular over extended periods of time, on Eagle 21 system circuit boards that do not have conformal coatings?	Page 22, line 1
What's your experience been on Unit 1 with the Woodward EGM. There is a TVA initiative to go to a digital governor control.	Page 27, Line 11
For safety-related monitoring, there are really two major changes where we have converted to digital. One is containment high rad monitors.	Page 28, Line 13
The other big change on safety-related monitoring was the post-accident monitoring system.	Page 29, Line 16

The FSAR and the SER do not include much detail concerning the I&C system.	Page 31, Line 5
Discussion of Non Safety Related Systems	Page 33, Line 17
Discussion of Process Control	Page 39, Line 18
Discussion of Segmentation of the Digital Control System	Page 43, Line 9
Incorporation of RAI responses into the FSAR	Page 58, Line 6 Page 77, Line 7 Page 80, Line 15
Integrated Computer System (ICS) Change Review	Page 59, Line 11
Discussion of Process Computer	Page 60, Line 9
Are the operators ever trained on the process computer? Are they run through drills where they have no information from the process computer? In other words, when you go through simulator training, do you black it out, and just force them to use what is available from the safety-related displays? Yes	Page 69, Line 22
Discussion of Factory Acceptance Testing on the Unit 2 Eagle 21	Page 71, Line 18
NRC Staff Review of Watts Bar 2 I&C (Chapter 7) Scope, Methodology, & Focus Areas	Page 81, Line 23
When you do 50.59 modifications to any system in the plant, is there a step in your procedures for 50.59 to look at the FSAR to make sure that it is always up to date in accordance with the annual updates?	Page 88, Line 9
NRC Staff Conclusions, & Open Items	Page 126, Line 20
Region II Presentation: status of Inspection Program, Current Inspection Activities, and Upcoming Inspections	Page 135, Line 18
TVA Watts Bar 2 Construction Completion Status	Page 144, Line 8
NRC Staff Watts Bar 2 Project Status	Page 155, Line 3

ACTION ITEMS	
Action Item	**Link of Pages in Transcript**
What has been the Westinghouse operating experience, in particular over extended periods of time, on Eagle 21 system circuit boards that do not have conformal coatings?	Page 22, line 1
P-12. There's a block on low low Tav. Apparently the fact that it's blocked is not alarmed, and the block is not automatically reinstated when the temperature goes back up. If that's not true, I'd like to know that. If it's true, I'd like to know why. Both why is it not alarmed to the operators, and almost more importantly, why isn't it automatically reinstated when temperature goes back up above the low low Tav?	Page 32, Line 8
Provide a copy of RIS 2006-17 and TSTF-493 concerning Limiting Safety System Setpoint Criteria to Member Brown (Done)	Page 107, Line 11

DOCUMENTS PROVIDED TO THE SUBCOMMITTEE:

- NUREG-0847, Supplement 23, Safety Evaluation Report Related to the Operation of Watts Bar Nuclear Plant, Unit 2, dated July, 2011
- Watts Bar Unit 2 Final Safety Analysis Report (FSAR) Amendment No. 103

Official Transcript of Proceedings

NUCLEAR REGULATORY COMMISSION

Title: ACRS Plant Operations and Fire Protection Subcommittee

Docket Number: n/a

Location: Rockville, Maryland

Date: July 12, 2011

Work Order No.: NRC-1000 Pages 1-159

NEAL R. GROSS AND CO., INC.
Court Reporters and Transcribers
1323 Rhode Island Avenue, N.W.
Washington, D.C. 20005
(202) 234-4433

1
2
3
4 DISCLAIMER
5
6
7 UNITED STATES NUCLEAR REGULATORY COMMISSION'S
8 ADVISORY COMMITTEE ON REACTOR SAFEGUARDS
9
10
11 The contents of this transcript of the
12 proceeding of the United States Nuclear Regulatory
13 Commission Advisory Committee on Reactor Safeguards,
14 as reported herein, is a record of the discussions
15 recorded at the meeting.
16
17 This transcript has not been reviewed,
18 corrected, and edited, and it may contain
19 inaccuracies.
20
21
22
23

1 UNITED STATES OF AMERICA

2 NUCLEAR REGULATORY COMMISSION

3 + + + + +

4 ADVISORY COMMITTEE ON REACTOR SAFEGUARDS

5 (ACRS)

6 + + + + +

7 PLANT OPERATIONS AND FIRE PROTECTION SUBCOMMITTEE

8 MEETING

9 + + + + +

10 TUESDAY

11 JULY 12, 2011

12 + + + + +

13 ROCKVILLE, MARYLAND

14 + + + + +

15 The Subcommittee met at the Nuclear

16 Regulatory Commission, Two White Flint North, Room

17 T2B1, 11545 Rockville Pike, at 8:30 a.m., Harold B.

18 Ray, Chairman, presiding.

19

20 COMMITTEE MEMBERS:

21 HAROLD B. RAY, Chairman

22 JOHN W. STETKAR, Member-at-Large

23 SAID ABDEL-KHALIK, Member

24 J. SAM ARMIJO, Member

25 DENNIS C. BLEY, Member

1 CHARLES H. BROWN, Member
2 MICHAEL T. RYAN, Member
3 JOHN D. SIEBER, Member
4
5 NRC STAFF PRESENT:
6 GIRIJA SHUKLA, Designated Federal Official
7 NORBERT CARTE, NRR/DE/EICB
8 PATRICK MILANO, NRR/DORL/LWBSP
9 TOMY NAZARIO, R-II/DCP/CPB3/WB
10 JUSTIN POOLE, NRR/DORL
11 LAKSHMINARASIMH RAGHAVAN, NRR/DORL/LWBSP
12 DAVID RAHN, NRR/DE/EICB
13
14 ALSO PRESENT:
15 GORDON ARENT, TVA
16 STEVE CLARK, TVA
17 WILLIAM CROUCH, TVA
18 STEVEN HILMES, TVA
19 FRANK KOONTZ, TVA
20 WARREN ODESS-GILLETT, Westinghouse
21 PETER OLSON, TVA
22 DAVID STINSON, TVA
23
24
25

P R O C E E D I N G S

CHAIRMAN RAY: Meeting will now come to order. This is a meeting of the Advisory Committee on Reactor Safeguards, Subcommittee on Plant Operations and Fire Protection.

I am Harold Ray, Chairman of the Subcommittee. Subcommittee Members in attendance are Said Abdel-Khalik, Sam Armijo, John Stetkar, Charles Brown, Jack Sieber, Dennis Bley, and I believe Michael Ryan will join us, but he is not present with us at the moment.

Mr. Girija Shukla of the ACRS Staff is the Designated Federal Official for this meeting. The Subcommittee will hear presentations from NRC Staff and the Applicant, Tennessee Valley Authority, regarding the status of construction, inspection, and licensing activities related to Watts Bar Nuclear Plant Unit 2.

We have received no written comments or requests for time to make oral statements from members of the public regarding today's meeting. The meeting will be open to public attendance.

Girija, do we have a line open, a phone line? No, no phone line.

The Subcommittee will gather information,

1 analyze relevant issues and facts, and formulate
2 proposed positions and actions as appropriate for
3 deliberation by the full committee. And I will
4 comment on that in a minute.
5 The rules for participation in today's
6 meeting have been announced as part of the notice of
7 the meeting published in the Federal Register on June
8 29th, 2011. A transcript of the meeting is being
9 kept, and will be made available as stated in the
10 Federal Register notice.
11 We request that participants in this
12 meeting use the microphones that are located
13 throughout the meeting room when addressing the
14 Subcommittee. The participants should first identify
15 themselves, and speak with sufficient clarity and
16 volume so that they may be readily heard. Please
17 silence your cell phones.
18 We will now proceed with the meeting.
19 Before I turn to the staff to make a couple of
20 comments, let me make a couple of introductory
21 comments of my own.
22 I am advised that expected future
23 Subcommittee actions, and full committee, as it
24 currently is foreseen, are now as follows: we
25 anticipate a subcommittee meeting on October 5th,

1 another one on December 14th, and then not a
2 presentation to the full committee until May 10th,
3 some 10 months from now.
4 Whether there might be more subcommittee
5 meetings to be held, or further changes in that
6 outlook, of course, only time will tell. But the
7 agenda for today's meeting, Pat, has been the subject
8 of some comment, in that it's -- where's Pat?
9 MR. MILANO: I'm right here.
10 CHAIRMAN RAY: Oh, there you are. I was
11 looking over there for you. I always turn this way to
12 the staff, and instead of being over there, you're
13 over there.
14 Anyway, it needs more detail. It's too
15 terse and hard to really tell what the content is.
16 And as a consequence of that, perhaps we will stumble
17 around a little bit here. But the one piece of
18 guidance I want to give you in advance, just based on
19 the discussions among members thus far, is we're going
20 to want to devote as much time as is of value to
21 discourse in the I&C area and the systems that are
22 planned for this plant.
23 There -- and we're not able, at least at
24 this point, to feel like we've gotten enough
25 information from the pre-reading that we've done. So

I would ask that both staff and the applicant take that into account here at the last minute as we're proceeding with the meeting, recognizing that we may be in a mode of asking questions that reflect the fact that we are craving more information than is currently available to us.

And with those two opening comments, then I will turn it over to you, Pat.

MR. MILANO: Thanks. Good morning, Mr. Ray, and the other members of the subcommittee. Again, my name is Patrick Milano. I'm a Senior Project Manager with the Watts Bar Special Projects Branch in the Office of Nuclear Reactor Regulation. With me today is Mr. Justin Poole, who is also with our branch.

With regard to the other presenters, primary staff presenters today, we have Mr. Tomy Nazario, the Senior Resident Inspector from Watts Bar Unit 2, that will be doing the inspection portion of the presentation. And from our Instrumentation and Controls Branch, you'll be hearing from David Rahn and Norbert Carte later this morning.

We are before the subcommittee today to continue with our presentations on the Staff's review of the operating license application for Watts Bar

1 Unit 2.

2 Although we will be giving you a brief

3 overview of the overall status of licensing

4 inspection, we will be focusing on what has transpired

5 since our last presentation that we made to this

6 subcommittee in February of this year.

7 Shortly, you will be hearing from TVA,

8 which will be providing you with its current status of

9 facility construction, followed by a discussion of the

10 primary areas of the FSAR that were addressed in the

11 Staff's latest supplement, supplement number three to

12 the Safety Evaluation Report.

13 In that regard, the two primary areas are

14 as noted. We'll be talking about chapter four, the

15 reactor -- basically the reactor fuels area. And

16 chapter seven, the instrumentation and controls.

17 Depending on the number of questions and

18 the -- we'll be -- if there's time, I've got in my

19 presentation -- we had what I would call our closure

20 of some open issues and stuff that came out of

21 supplement 22, and that the staff has reviewed and now

22 considers them closed.

23 If we have time, we'll go through some

24 briefly, what they were and what the staff did to make

25 its assessment that those areas were okay. If not,

1 we'll cover it in the next subcommittee meeting.
2 CHAIRMAN RAY: Is -- I don't want to be
3 disruptive to either you or the applicant, but would
4 we be prepared to invert these two topics, and do I&C
5 first and then the reactor?
6 MR. MILANO: Yes, we can.
7 CHAIRMAN RAY: Can we do that?
8 MR. MILANO: Yes.
9 CHAIRMAN RAY: I think that will give us
10 a better sense of how much time we want to spend in
11 the area that I indicated that there's interest in
12 pursuing further, and then we can know how much time
13 we can spend on the reactor, which I think all of us
14 pretty well recognize is less -- involves less change
15 from Unit 1 --
16 MR. MILANO: That's correct.
17 CHAIRMAN RAY: -- than the I&C area, where
18 we want to make sure we understand what's going on.
19 So if we could do that, that would be appreciated.
20 MR. MILANO: Okay. After TVA's
21 presentation, the staff will provide a short status of
22 the licensing and construction inspection programs as
23 time permits. And then we will discuss the staff's
24 conclusions, and we'll look -- and we will provide you
25 a look ahead of what's remaining to be completed under

1 the review of the FSAR.

2 Now I would like to turn over the floor to

3 TVA, and in particular Mr. David Stinson, TVA's Vice

4 President for Watts Bar Unit 2, and Mr. William

5 Crouch, the licensing manager for Unit 2. Thank you.

6 MR. STINSON: Good morning. I'm David

7 Stinson, the Unit 2 Vice President. It sounds like we

8 want to change our format a little bit and maybe start

9 out to the completion status, you want us to start out

10 with the I&C.

11 CHAIRMAN RAY: We do, just because I think

12 that will give us a better sense of how much time

13 that's going to take, and then the other things I can

14 more easily accommodate that.

15 MR. STINSON: No problem. I don't mind

16 closing at all.

17 MR. HILMES: Okay. My name is Steven

18 Hilmes. I am the electrical and I&C manager for the

19 Watts Bar Unit 2 project. If you go to page 21 in

20 your presentation, it's going to walk through a little

21 bit on the changes that we've implemented on Unit 2

22 for the I&C project, reasons for modifications such as

23 effective design and the status of testing.

24 Going to page 22, early on in the I&C

25 design development, a philosophy was established to

1 try to maintain as close similarity between Unit 1 and
2 2 in the safety actuation area. For the safety
3 actuation systems, the digital and analog platforms
4 were maintained the same for both units, if at all
5 possible. There is one small change, but it was an
6 analog to analog conversion.
7 Modifications to hardware were only made
8 for obsolescence of components, generally on the board
9 level type changes, IC chips, things along those
10 lines.
11 Another change that was done, however, was
12 Watts Bar was originally a 10 to 50 milliamp plant.
13 As we're all aware of, 10 to 50 milliamp platforms are
14 hard to come by anymore, so we took this opportunity,
15 since we had to replace transmitters, to convert to 4
16 to 20.
17 In the --
18 MEMBER BROWN: This is largely -- excuse
19 me. This is largely for your sensor conversions?
20 MR. HILMES: Yes. Any inputs or outputs
21 have been changed to a 4 to 20.
22 MEMBER BROWN: That's formats for analog
23 transmission.
24 MR. HILMES: That's correct. In general,
25 it was just a matter of an input resistor or an output

resistor.

MEMBER BROWN: I understand that.

MR. HILMES: For the digital portions of the safety-related actuation systems, the firmware is identical between Unit 1 and Unit 2.

MEMBER BROWN: When you say firmware, what do you mean by firmware? I know what I mean by firmware, but --

MR. HILMES: Yes. Our Eagle 21 is firmware-based, meaning the software is programmed on a chip and inserted on e-PROMs. So for Eagle 21, it's the identical software for both units.

MEMBER BROWN: Okay. Let me walk through that again. You made a comment somewhere -- I don't remember exactly where it was, that this is a discrete logic component system.

MR. HILMES: Eagle 21 is microprocessor-based.

MEMBER BROWN: Okay. I wanted to confirm that, because I'm not familiar with that.

MR. HILMES: The SSPS, which is the actual 2 out of 4 logic, is discrete logic.

MEMBER BROWN: Okay. But Eagle 21 feeds the SSPS for the --

MR. HILMES: That's correct.

1 MEMBER BROWN: -- final trip and actuation
2 functions.
3 MR. HILMES: It's equivalent to the
4 bistables that you normally have in a plant.
5 MEMBER BROWN: Okay. Now, I'm not quite
6 finished yet. On the firmware aspect of it -- and if
7 I get my question wrong, please fix me. It is
8 microprocessor-based.
9 MR. HILMES: That's correct.
10 MEMBER BROWN: And so what you refer to as
11 firmware is fundamentally your programming, your
12 application code, is loaded into your e-squared PROMs
13 or e-PROMs, whatever. I presume it's e-squared PROMs,
14 is that correct?
15 MR. HILMES: E-PROMs, actually.
16 MEMBER BROWN: Okay. They're not
17 electrically erasable, they're UV PROMs or some other
18 --
19 MR. HILMES: They're UV PROMs.
20 MEMBER BROWN: UV PROMs, okay. Those are
21 -- they're not changeable. So what you mean by
22 firmware for your code is, that chip becomes your
23 firmware. Is that what you're saying?
24 MR. HILMES: That's correct.
25 MEMBER BROWN: Okay. So if you want to

1 change the program, you burn a new PROM -- I mean, you
2 write the program, the application. You make the
3 changes. You burn it in, UV-wise, and then you take
4 that chip and you take out the old and put in the new
5 one, and you maintain, I guess, configuration control
6 by the nature of the control of that chip, and the
7 version of it, or what have you.
8 MR. HILMES: Yes. Essentially, the chip
9 is an individual part number --
10 MEMBER BROWN: With a part number, right?
11 MR. HILMES: Yes.
12 MEMBER BROWN: Okay. All right.
13 MR. HILMES: For the safety-related
14 monitoring systems, primarily the PAMS systems, we
15 replaced a system if it was obsolete or if Unit 1 was
16 going to replace the system near-term. Again, that's
17 primarily talking about PAMS here.
18 For the non safety-related process
19 control, we did replace the system if it was obsolete.
20 We've gone to digital process control. And the
21 primary reason for making that decision was based on
22 the increased reliability and ability for redundant
23 sensor processing and so forth that the digital
24 systems give you.
25 So what I want to do is go to page 23.

1 I'm going to walk through the --

2 MEMBER BROWN: Let me jump just a minute

3 so I can just calibrate myself before you get there.

4 When you talk about the non safety-related process

5 controls, there were references to a process computer

6 system in at least the SERs and in the FSAR. Is that

7 the part you're talking about?

8 MR. HILMES: No, I'm talking about the DCS

9 itself, the what would originally be steam generator

10 level control.

11 MEMBER BROWN: But digital control system?

12 What's DCS?

13 MR. HILMES: It's I/A, it's a distributed

14 control system.

15 MEMBER BROWN: Distributed control system.

16 MR. HILMES: So whereas you used have

17 steam generator level control, pressurizer control,

18 were controlled by old analog modules, it is now a

19 digital control system. Non safety-related only.

20 MEMBER BROWN: So one system can -- okay.

21 MR. HILMES: Not -- let me -- if I can

22 continue a little bit --

23 MEMBER BROWN: All right. I'll wait for

24 a few minutes before I --

25 MR. HILMES: -- it'll become more obvious

for you.

MEMBER BROWN: Let me tell you, my difficulty was, in trying to go back to the FSAR, getting at like 103, the latest one that at least I had, there was really -- there were no diagrams, no figures, no nothing that described -- gave you a picture.

It was just words that talked about a distributed control system, without any ability for an old brain like mine to have a graphical input, something I could store, as opposed to trying to save 4,622 words in terms of -- so I had a difficult time picturing the layout, and what you meant by your distributed control system.

MR. HILMES: Okay.

MEMBER BROWN: Because you used to have one by one for everything, and now it's all lumped into one big piece for these, or multiple pieces -- is it multiple pieces?

MR. HILMES: Multiple pieces.

MEMBER BROWN: Well it's not -- how do we get a grasp on that? And that is a change.

MR. HILMES: Yes, it is.

MEMBER BROWN: And I think we would like to have a feel for what that looks like --

1 MR. HILMES: Okay.

2 MEMBER BROWN: -- from a figure and block

3 diagram standpoint, as opposed to just words.

4 MR. HILMES: I have a figure in here that

5 I think will help you with that.

6 MEMBER BROWN: Okay. I think I know which

7 figure you're talking about, and it didn't help a

8 whole lot.

9 MR. HILMES: Okay.

10 MEMBER BROWN: I hate to -- just giving

11 you a heads-up before we get there.

12 MR. HILMES: Okay. All right. So working

13 down through the hierarchy of systems, emergency

14 safety actuation system, as previously stated, we use

15 Eagle 21 for the bistables. It's the same system on

16 both units, same platform. It is microprocessor-

17 based.

18 Primary changes are on the board level for

19 components that are obsolete, and the conversion of 4

20 to 20 that we did. Firmware is identical on both

21 units. For the actuation logic, again, both units use

22 Westinghouse SSPS system. It's a discrete logic

23 system.

24 We actually went to the point -- on this

25 system, Westinghouse went in and had the high

threshold logic gates manufactured in order to maintain consistency between the units.

MEMBER BROWN: When you say -- I'm sorry.

MR. HILMES: Yes?

MEMBER BROWN: I was going to ask one. Just, high threshold, you mean --

MR. HILMES: Motorola high threshold, I think it was 15 volt operating voltage.

MEMBER BROWN: Fifteen volt? Okay. As opposed to three and four volts that you --

MR. HILMES: Yes.

MEMBER BROWN: I'm sorry, John.

MEMBER STETKAR: Before you get to the next page, I'm going to ask you a generic question. Because the staff raised it in the SER, and I was curious. It said that the Unit 2 circuit boards are not coated.

MR. MILANO: Yes.

MEMBER STETKAR: Are the Unit 1 circuit boards coated?

MR. MILANO: The original boards on Unit 1 have conformal coating, but as they are being replaced for -- we periodically replace the LPCs, the circuit boards. They will no longer have conformal coating either.

1 MEMBER STETKAR: What experience does
2 Westinghouse -- I understand that Westinghouse
3 justifies this because they have some kind of
4 proprietary solder mass process for their solder
5 connections.
6 MR. MILANO: Yes, and they've done some
7 testing to show that the humidity does not have an
8 impact to --
9 MEMBER STETKAR: I did a little research,
10 and humidity doesn't have any effect at all on the
11 formation of tin whiskers, which is one of the real
12 benefits of having a conformal coating on your boards.
13 Humidity is not -- at least the research I looked at,
14 humidity is not a parameter that seems to affect the
15 growth of tin whiskers.
16 MR. MILANO: You're right.
17 MEMBER STETKAR: So my question -- I
18 understand protecting the boards from a humidity
19 perspective, but what experience does Westinghouse
20 have with their soldering process in an uncoated board
21 environment for the growth of tin whiskers? And this
22 requires some amount of time.
23 MR. MILANO: Yes.
24 MEMBER STETKAR: This is not something you
25 can do in a ten minute test.

1 MR. MILANO: Westinghouse has had some
2 problems with SSPS boards with growth of tin whiskers
3 on certain vintages of boards. As of right now, as
4 far as I'm aware of, there has been no issues with any
5 of the Eagle processor boards as far as tin whisker
6 generation.
7 And you know, that's --
8 MEMBER STETKAR: Because everything I've
9 read says conformal coatings really help you --
10 MR. MILANO: It doesn't --
11 MEMBER STETKAR: -- both from tin whiskers
12 growing out, and if they do protrude, from coming back
13 in, you know, and contacting --
14 MR. MILANO: It doesn't necessarily keep
15 you from getting tin whiskers, but yes, it is helpful.
16 MEMBER STETKAR: If you have them and they
17 don't do anything to you, you don't care.
18 MR. MILANO: Again, keep in mind, though,
19 that Eagle 21 boards, they have a periodic replacement
20 requirement. So essentially, they are --
21 MEMBER BROWN: Say that again.
22 MR. MILANO: They have a periodic
23 replacement requirement.
24 MEMBER BROWN: Of the board, the circuit
25 boards?

1 MR. MILANO: Yes. Specifically, the LCP
2 boards, there's --
3 MEMBER BROWN: LCP meaning?
4 MR. MILANO: The loop processor, control
5 processor. So they have to be replaced periodically.
6 During that, they are either refurbished or you
7 install a new board, so there is visual observation of
8 the boards.
9 MEMBER STETKAR: Do you have any
10 information from --
11 MEMBER SIEBER: What's the period of
12 replacement?
13 MR. MILANO: I believe it's ten years, is
14 what I recall
15 MEMBER SIEBER: Same as years and years
16 ago.
17 MR. MILANO: Yes. There was some early
18 issues with clock chips on the LCP boards, and that's
19 where --
20 MEMBER SIEBER: And the failures seemed to
21 occur after two years. Okay.
22 MR. MILANO: Steve, do you have a comment
23 on that?
24 MR. CLARK: Yes. This item was actually
25 closed --

1 CHAIRMAN RAY: Identify yourself, please.
2 MR. CLARK: I'm sorry. Steve Clark,
3 representing TVA. This actually was closed based on
4 a previous NRC position, and the conclusion was that
5 the low number of reported events associated with this
6 issue, the lack of any increasing trend, the lack of
7 any apparent decrease in reliability of systems or
8 components due to tin whiskers, the existence of
9 applicable regulatory requirements and programs, i.e.
10 10 CFR Part 21, the maintenance rule requirements, the
11 Reactor Oversight Program, the issuance of information
12 notice 2005 -- that one's not right. I think it's
13 2005.2 -- to alert licensees indicated that tin
14 whiskers do not meet the requirements of NRC
15 management directive 6.4, Generic Issues Program, for
16 further pursuit.
17 Based on the considerations discussed
18 above, RES recommended that the issue be returned to
19 the originator to be evaluated for other possible
20 options. As a result, the issue was dropped from
21 further pursuit. And that's from the NRC's own
22 records.
23 MEMBER STETKAR: Unfortunately, I'm an
24 engineer and not an attorney, so I don't understand a
25 lot of that stuff.

1 My concern is, what has been the
2 Westinghouse operating experience, in particular over
3 extended periods of time, on Eagle 21 system circuit
4 boards that do not have conformal coatings? That is
5 a very specific question. It isn't generic Eagle 21
6 boards, because perhaps some of them are coated. I
7 don't know.
8 And I don't know how long they've been in
9 operation on particular applications. So you know, if
10 you're only taking a snapshot of your operating
11 experience over two or three years, or something like
12 that, in the industry, that's not a long enough time
13 to actually see any functional effects from this
14 phenomenon.
15 Or, if for some reason, a reasonable
16 fraction of the boards indeed do have conformal
17 coatings, that's a difference that we're going to at
18 Watts Bar.
19 MR. CLARK: Let us take that as an issue,
20 and we'll get back to you.
21 MEMBER STETKAR: So it's basically what
22 has -- does Westinghouse have reasonably well
23 documented operating experience with uncoated boards.
24 CHAIRMAN RAY: Okay, Girija, we want to
25 take note of this as something they owe us back.

1 MEMBER BROWN: Can I make one observation
2 on that? Conformal coating -- I'm glad you picked up
3 on that. I mean, I've never installed anything
4 anywhere, of any of these boards, in any kind active
5 humidity environment or potential humidity environment
6 that didn't have conformal coating, just because our
7 experience in testing -- I'm from the Naval Nuclear
8 Program, excuse me -- just because our testing
9 experience demonstrated that if you didn't conformal
10 coat it, and you got some high humidity circumstances,
11 then you ended up getting some -- not so much tin
12 whiskers, or whatever you want to call them, but the
13 fact is you get some varying signals coming out, your
14 resistances from trace to trace when -- I presume
15 these are the new, modern boards that have traces that
16 are four micros -- I'm kidding slightly here, but
17 they're close together.
18 I don't know whether they're multi-layer
19 boards or not, but you've got through-holes with parts
20 going through them, all kinds of stuff. And I mean,
21 if you're in an accident situation, casualty
22 situation, where you now end up with higher humidity
23 levels and higher temperatures inside of the -- in the
24 rooms where these systems are located, you're still
25 depending on this stuff for information in terms of

1 you plant corrective actions and other monitoring that
2 you do.
3 So that's a little bit surprising to me,
4 to hear that you are not conformal coating boards.
5 MR. HILMES: The environment that --
6 excuse me. The environment that these boards are in
7 are HVAC-controlled areas. We do have one HVAC,
8 essentially, the humidity in the room, and
9 temperatures, are staying --
10 MEMBER BROWN: Well, what if you lose
11 that, though? I mean, you can't predict whether
12 you're going to keep all this stuff. If you have
13 station blackout circumstances, and now you're on some
14 other backup power for a while, and you're not running
15 HVAC, it's -- I understand they're all humidity
16 controlled and temperature controlled. We learned
17 that the hard way also. If you want to maintain the
18 stuff for a while, you try to keep it cool and dry.
19 But that still doesn't -- I'm just throwing that out,
20 that it's a little surprising to me. I'm just
21 amplifying John's comment.
22 MR. HILMES: Okay. I'll follow up on that
23 question, on operating experience for tin whiskers for
24 Eagle 21 boards.
25 MEMBER BROWN: This isn't exclusive to tin

1 whiskers. This is general moisture on the cards.
2 MEMBER SIEBER: Well, even beside that
3 periodic replacement, it's actually a pretty good idea
4 to --
5 MEMBER BROWN: Well, I'm not objecting to
6 periodically replacing them. I think that we came to
7 that conclusion also. If you don't replace this stuff
8 once or twice in the life of the ship, then you're
9 going to start having reliability problems, no matter
10 how good it is.
11 MEMBER SIEBER: In commercial plants'
12 experience, 10 years ended up being about the right
13 number. And one of the factors was, those cards that
14 used capacitors, capacitors deteriorate over time.
15 And it doesn't make any difference whether the card is
16 coated or not.
17 And our experience was that temperature
18 and humidity didn't seem to make a big difference
19 either, because the components of the boards
20 themselves generate the heat. And so they create
21 their own environment.
22 But anything with capacitors turns out to
23 be a longevity issue, and the industry ended up with
24 about a 10 year replacement rate to deal with that
25 particular issue.

1 But I think we have to make sure that we
2 understand exactly what it is they're doing to make
3 sure that it's in conformance with previous operating
4 experience.
5 MEMBER BROWN: I'm done.
6 MR. HILMES: Okay. We discussed SSPS.
7 Moving to slide number 24, the source range and
8 intermediate range monitors are gammametric on both
9 units. The Unit 2 system is an upgraded version of
10 the Unit 1. They are analog rate-meters. However,
11 there is an embedded processor in the monitor for the
12 shutdown monitor.
13 That digital portion of those monitors is
14 identical between Unit 1 and Unit 2. Same firmware,
15 same processor.
16 MEMBER BROWN: So the Unit 1 had embedded
17 processors?
18 MR. HILMES: Yes.
19 MEMBER BROWN: When did Unit 1 go online?
20 MR. HILMES: '96.
21 MEMBER BROWN: '96? Okay.
22 MR. HILMES: It's a rather simple timer-
23 type setup on the board. It's not a complex
24 processor.
25 MEMBER BROWN: Okay.

1 MR. HILMES: Aux feedwater control and
2 emergency gas treatment, we use Foxboro Spec. 200s on
3 both units. They are analog systems. Again, the only
4 major change here is the board-level component
5 replacements due to obsolescence and the conversion of
6 4 to 20.
7 Turbine-driven aux feedwater speed
8 control, we are still using an EGM box on both units.
9 They are analog. Essentially, the controls are
10 identical. The only delta, again, is the 4 to 20.
11 MEMBER STETKAR: Steve, what's your
12 experience been on Unit 1 with it, the Woodwards EGM?
13 You said you're still using it.
14 MR. HILMES: Yes. There is a TVA
15 incentive to go to a digital control, governor
16 control. Right now that's still in the corporate
17 level, looking at it. We really don't have that much
18 reliability on the EGM boxes themselves.
19 The problem is, they are obsolete. They
20 are hard to come by. And some of the -- we've had to
21 have some remanufacturing done in the controls, and
22 refurbishments, in order to get a good one, a good
23 setup for Unit 2. But yes, long-term-wise, we're
24 looking at replacement, also.
25 MEMBER STETKAR: Okay. Thanks.

1 MR. HILMES: There is also some
2 miscellaneous safety-related controls out there.
3 These are discrete controllers that handle things
4 along the lines of emergency raw water screen wash,
5 things like that.
6 Unit 1 kind of had a mix of G-Mac and
7 Robert Shaw for this equipment. Unit 2, since we were
8 using Spec. 200, we decided to stay with that, use
9 that format. It's an analogue to analogue to
10 conversion. Again, it's strictly discrete
11 controllers.
12 Moving on to Slide 26, safety-related
13 monitoring. For safety-related monitoring, there's
14 really two major changes that we have converted to
15 digital. One is containment high rad monitors. We've
16 gone to a General Atomics RM-1000 monitor. It is a
17 software-based -- or actually, it's a firmware-based,
18 but it is burnable, electrically burnable.
19 It's a discrete component. It's "pull
20 this rate meter out, and this is the replacement rate
21 meter for it." In the design, we have no digital
22 communications with these rate meters. They are
23 strictly analogue outputs to the process computers
24 that are isolated, R2 recorders if applicable.
25 MEMBER BROWN: So just the processing? In

1 other words, they take an analogue -- they take their
2 analogue signal in, they convert it, they munch on it,
3 but any data transmission is analogue --
4 MR. HILMES: That's correct.
5 MEMBER BROWN: -- communications. And any
6 communications in, at all, are analogue.
7 MR. HILMES: There is no external
8 communications.
9 MEMBER BROWN: At all?
10 MR. HILMES: At all.
11 MEMBER BROWN: It's strictly outputs?
12 MR. HILMES: It's just outputs. We have
13 used these at our Sequoyah plant in non-safety
14 applications, and we've had pretty good success using
15 these monitors.
16 The big change on safety-related
17 monitoring was the post-accident monitoring system.
18 This is a -- Unit 1 originally had an ICCM-86 system.
19 This was an old, multi-bus system, that was actually
20 older than the Eagle 21.
21 It was not readily available for
22 reengineering, so what we have determined -- what we
23 decided to put in was a Common Q platform. It's based
24 on ABB-AC160 equipment.
25 It is functionally equivalent to what Unit

1 has. The system includes two independent trains of RVLIS, core exit thermal couples, and saturation monitoring.

It does have digital communications to the process computer, or as we call it, the ICS. The communications is unidirectional. It actually has two levels of barriers there. One is the maintenance test panel is the qualified isolator. Secondly, there is a data diode that has been installed between the Common Q system and the process computer, in addition.

MEMBER SIEBER: Okay. This has no control functions?

MR. HILMES: This has no control functions.

MEMBER SIEBER: Just data monitoring.

MR. HILMES: Yes. It is -- some of our Cat A variable, type A variables for PAMS, but it has no automatic control function.

MEMBER SIEBER: Is it like an SPDS, part of that?

MR. HILMES: Yes. You know, it's a qualified PAM indication.

MEMBER SIEBER: Okay.

MR. HILMES: Okay?

MEMBER STETKAR: Steve, let me -- you have

1 several slides coming up here on non-safety-related
2 systems. Let me ask you just sort of a logistics
3 question here.
4 I had a few questions as I was reading
5 through the FSAR and the SER regarding not so much
6 details of the I&C system itself, but its interaction
7 with the plant functions, things that it was doing.
8 When is it better to address those
9 questions? Because I don't necessarily want to
10 interrupt the discussion of what's coming up here as
11 far as what's inside the box, if you will, as far as
12 the I&C system, with those kinds of questions.
13 MR. HILMES: From a safety-related
14 standpoint, or a non-safety-related standpoint?
15 MEMBER STETKAR: Safety-related. That's
16 why I interrupted you before we get to the next slide,
17 here.
18 MR. HILMES: Now would be fine.
19 MEMBER STETKAR: But I don't know when --
20 I mean, we could also ask the same questions when we
21 get to the other chapters where those functions exist,
22 if you will.
23 MR. HILMES: Yes. Frank, what's the best
24 way to --
25 MEMBER STETKAR: I don't know the best

1 place to bring it up.

2 MR. HILMES: In the systems themselves?

3 MR. KOONTZ: Probably by the systems, yes.

4 MR. HILMES: Okay. That may be better

5 done later.

6 MEMBER STETKAR: But let me ask you one

7 that's probably -- it's kind of not so much system --

8 it's sort of system -- P-12. There's a block on low-

9 low T av --

10 MR. HILMES: Yes.

11 MEMBER STETKAR: -- that prevents opening

12 the steam dumps below -- when you get below low-low T

13 av, it's at the T-12 overlock, so you don't overcool.

14 Apparently, on Unit 2, as best as I can tell, that

15 interlock -- it's manually instated, so that you can

16 cool down.

17 And I guess you've changed your cooldown

18 procedures to allow you to cool down a little faster

19 or whatever. I don't care about that. What I care

20 about is, apparently the fact that it's blocked is not

21 alarmed, and that it's not automatically reinstated

22 when temperature goes back up.

23 At least, that's what I could tell from

24 what I read. If that's not true, I'd like to know

25 that. If it's true, I'd like to know why. Both why

is it not alarmed to the operators, and almost more importantly, why isn't it automatically reinstated when temperature goes back up above that -- the low-low T av?

That's sort of the nature of the interfaces, and I brought this one up because it kind of is the system, but it's also part of the function. So if you just want to make a note of that one, and as far as the other interactions with pumps and pipes and valves, and those types of things, I'll wait till we get to those systems.

MR. CROUCH: Let us take that as a question. We'll bring it back.

MEMBER STETKAR: Yes. Thank you. Thanks for indulging me. Now you can go on with all of your non-safety stuff.

MR. HILMES: Non-safety-related systems. For the rod position indication, we use CERPI in both Unit 1 and Unit 2.

MEMBER SIEBER: Is that a digital system?

MR. HILMES: It is a digital system.

MEMBER SIEBER: Okay. So it's not particularly sensitive to the reactor coolant system temperature, right?

MR. HILMES: No, it is not.

1 MEMBER SIEBER: Analogue systems --
2 MR. HILMES: That is correct.
3 MEMBER SIEBER: -- because of the variable
4 reluctances --
5 MR. HILMES: You have the non-linearity
6 issues. This was an attempt to help to resolve some
7 of those issues.
8 MEMBER SIEBER: It's not perfect, but it's
9 better than the old ones.
10 MR. HILMES: Yes.
11 MEMBER SIEBER: Okay. Thanks.
12 MR. HILMES: CERPI wasn't originally
13 installed in Unit 1. It was changed out under 50.59
14 several years ago.
15 MEMBER SIEBER: Right.
16 MR. HILMES: The deltas between the two
17 systems are basically upgrades and hardware, primarily
18 the displays on the panel have changed.
19 MEMBER SIEBER: Last time I checked, 38
20 Westinghouse units made that change.
21 MR. HILMES: I can't tell you right
22 offhand.
23 MEMBER SIEBER: It's a reasonable upgrade.
24 MR. HILMES: Yes. Loose parts monitoring.
25 We used to have an old tech system. It was somewhat

1 of an analogue loose parts monitoring system. We have
2 converted to a Westinghouse DMMS-DX system.
3 This system is actually being replaced on
4 both units. This is a pretty common Westinghouse
5 replacement system for loose parts.
6 MEMBER SIEBER: It's neither required by
7 regulation or your FSAR?
8 MR. HILMES: There is regulation -- it's
9 not required by tech specs. Is it in the TRM at all?
10 I don't believe --
11 MEMBER SIEBER: I don't think so.
12 MR. HILMES: I don't believe so.
13 MEMBER SIEBER: And there is no regulation
14 for it. However, it's a recent standard feature.
15 MR. HILMES: No, there is regulatory
16 guidance on loose parts. It's -- it has to be able to
17 function in the environment where it's located.
18 Essentially, qualification requirements.
19 MEMBER SIEBER: Do you know the number, by
20 any chance, or does your staff?
21 MR. HILMES: Steve, do you have that off
22 the --
23 MR. CLARK: I'm trying to find it.
24 MEMBER SIEBER: Staff may know it.
25 MR. CLARK: I want to say it's like NUREG

--

MR. RAHN: I could answer that, if you want.

CHAIRMAN RAY: Go ahead.

MR. RAHN: My name's David Rahn. I'm with the I&C branch in the office of NRR. And it's Regulatory Guide 1.133, is the item that we're interested in.

And it is true that there are some requirements in there for ensuring that it must at least survive an operating basis earthquake, as well as some other environmental qualifications, to make sure it doesn't fail in service under its long-term vibration that it experiences when it's inside a drywell.

MEMBER SIEBER: It has no control functions.

MR. HILMES: It has no control function.

MEMBER SIEBER: Great. I'll read about it later on.

MR. HILMES: Moving on to turbine valve control, Unit 1 and Unit 2 both use Westinghouse AEH system. It's essentially -- we did carb replacements, refurbishments. However, within the control block itself, it's identical.

1 There is one delta here, in that the new
2 turbine we have has no impulse chamber. And in order
3 to deal with that, what we did is, we put a
4 transmitter on each of the four steam lines going
5 directly to the steam chest.
6 MEMBER SIEBER: Okay.
7 MR. HILMES: Using -- that signal goes
8 into the distributor control system, which does some
9 medium -- actually, a high-medium select to give us
10 our process signal for control.
11 MEMBER SIEBER: And who's the turbine
12 manufacturer?
13 MR. HILMES: It's Siemens.
14 MEMBER SIEBER: Siemens? Okay.
15 MR. HILMES: Eagle interlocks and the
16 AMSAC interlocks still stay on just two of the
17 channels. We didn't see -- looking at the
18 perturbations we would see during valve testing, it
19 was not significant effect on them.
20 The annunciator system, page -- slide 28
21 -- is a Ronan system. It's essentially an upgraded
22 version of what we have on Unit 1. The Unit 1 system
23 was DOS-based. Unit 2 is Windows-based. A lot of the
24 hardware, actually, we reused the Windows boxes. We
25 refurbished, and we reused them.

1 MEMBER STETKAR: Those differences are
2 transparent to the operators?
3 MR. HILMES: They are transparent to the
4 operator.
5 Reactor coolant pump and turbine generator
6 vibration are Bentley-Nevada systems. We essentially
7 used the latest upgrade of Bentley-Nevada equipment
8 for both of them.
9 There is one delta here, on the -- the
10 feed pump thrust trips come out of this system. On
11 Unit 1, it is a single-coincidence trip. On Unit 2,
12 we made it a 2 out of 3 coincidence.
13 Okay?
14 MEMBER SIEBER: Okay.
15 MR. HILMES: Containment hydrogen monitor,
16 per current regulations, we downgraded to a non-
17 safety-related system. It is a digital monitor. It's
18 a single monitor now, instead of dual monitors. And,
19 well, that's pretty much it.
20 We have done all the validation that it
21 will operate in the environment it's required for.
22 MEMBER BROWN: What's the basis for
23 downgrading it to a non-safety-related-system?
24 MR. HILMES: Which NUREG is that this
25 time?

CHAIRMAN RAY: All plants have done that, because the containment can withstand detonation.

MR. HILMES: 1.7, I think.

MEMBER BROWN: Okay. We know that for sure, huh? Based on recent experience?

(Laughter.)

CHAIRMAN RAY: It's hard to answer the question.

MEMBER BROWN: Just, based on recent experience, I'm wondering why that makes sense. That's all.

CHAIRMAN RAY: We're talking PWRs here, so --

MEMBER SIEBER: Containment design.

MEMBER BROWN: That's a nuance that I won't pick up on, since the BWR side is more amorphous.

MR. HILMES: Okay. Moving on to process control, let's go to slide 29. What we have done here -- well, Unit 1 and Unit 2 originally had analogue process controls. They were Foxboro H-Line Bailey/G-Macs and Robert Shaws.

We have gone to a DCS system. The DCS is a fault-tolerant distributed control system. We have redundant processor pairs, which continuously check

1 each other. If one fails, the other one takes over.
2 We have set this up into 15 control
3 processor pairs. This is along the lines of your
4 questions. What we try to do -- actually, this is a
5 good time to go to the next slide, here.
6 What we did is, we -- you need to, when
7 you design one of these, you have to ensure that a
8 control processor pair failure doesn't cause you to be
9 outside your transient analysis for control system
10 failures.
11 So what we've done is we've broken the
12 control system into 15 pairs. Two of them are going
13 to the aux control room, but they are not networked.
14 They are -- when you are operating, they do not
15 communicate at all to the rest of the network, okay?
16 So they're not shown here.
17 But for example, like steam generator
18 PORVs, you have each steam generator's PORV in a
19 separate control processor pair. So if I lose this
20 guy, I still have the other three, that I'm minimizing
21 my impact on my plant.
22 In the Westinghouse design, however, there
23 are certain control systems that actually get signals
24 from other systems, like your --
25 CHAIRMAN RAY: Steve? For the purposes of

1 the transcript, if you just look at this monitor here,
2 we can hear you better. You can point there, but look
3 here.
4 (Laughter.)
5 MEMBER STETKAR: Actually, you can use the
6 mouse. Here you go.
7 CHAIRMAN RAY: Whichever way you want to
8 do it.
9 MEMBER STETKAR: You can give that to
10 Steve.
11 MEMBER SIEBER: And you have a mouse.
12 (Simultaneous speakers.)
13 MR. HILMES: Okay. So on the systems
14 where we, for example, out of rod control, you have
15 some signals going to your steam generator level
16 control.
17 That's standard Westinghouse design. We
18 wanted to design this system so that you could lose
19 the network entirely and not take down the -- you
20 know, create a perturbation to the operator. So what
21 we did is, on those signals that were -- where we are
22 sending the signal over the network, we have put in a
23 redundant analogue signal also, so it communicates
24 through both digital and analogue.
25 If I lose the network connection, it

1 continues to function, so the operator just keeps on
2 going. He gets an alarm that it -- we've lost the
3 network -- but they keep going.
4 So what we have done is, we have segmented
5 this thing into these processor pairs, so that we do
6 not create an event where we lose multiple control
7 systems outside what was already analyzed in chapter
8 15.
9 MEMBER SIEBER: And so you don't run all
10 the control system through one set of processors.
11 MR. HILMES: Oh, no.
12 MEMBER SIEBER: Each one is independent.
13 MR. HILMES: Yes. We've had this concept
14 of islands of control for some time, that we've been
15 using. And you know, if you start looking at what can
16 take down these systems, essentially the real concern
17 is losing this network. And so we ensure that we can
18 lose that network without any issues.
19 MEMBER STETKAR: Steve, I'm pretty well
20 out of my league, so Charlie's going to have to jump
21 in here pretty quickly. But when you talk about -- I
22 understand losing the network. People always talk
23 about losing things in a nice clean way, like you flip
24 the switch and it goes away and everything is clean
25 and black.

1 What provisions are there to prevent
2 crosstalk among the different processing functions
3 here, while they're connected to the network? In
4 other words, a fault in one processing function
5 propagating up, being read -- that's not a network
6 failure in the sense of turn off the switch,
7 everything is black. It's a propagation of fault
8 conditions.
9 MR. HILMES: Well, again, the system is
10 segmented, okay? From a transient event type
11 analysis. So that if I lose one processor pair, I
12 don't deviate from that.
13 MEMBER STETKAR: Losing it cleanly,
14 though.
15 MEMBER BROWN: But where's a pair in
16 there?
17 MR. HILMES: Actually, each of these is a
18 processor pair. There is actually two microprocessors
19 on each.
20 MEMBER BROWN: Okay, so that's the
21 redundancy. That's the one that's acting -- that you
22 mentioned a minute ago, and the other one's monitoring
23 it in some way.
24 MR. HILMES: Yes.
25 MEMBER BROWN: So you've got some scheme

1 to tell you that its primary one is operational, and
2 the other one just sits there asleep until it needs to
3 -- not literally asleep, but --
4 MR. HILMES: They both look at each
5 other's outputs digitally and verify they're the same.
6 If they see a delta, they go through an algorithm to
7 determine which one's in error. If they can't
8 determine that, the one that was originally in
9 control, stays in control.
10 MEMBER BROWN: So there is a one
11 designated as a primary one.
12 MR. HILMES: Yes, but --
13 MEMBER BROWN: A normal, if you will -- in
14 other words --
15 MR. HILMES: It will automatically --
16 MEMBER BROWN: The fault one, even though
17 you may see there's a difference between the two.
18 MR. HILMES: Yes.
19 MEMBER BROWN: If it's indeterminate, then
20 you stay with the primary one.
21 MR. HILMES: Yes.
22 MEMBER SIEBER: The place where you use
23 data diodes, does that sort of enforce the separation
24 concept?
25 MR. HILMES: We do not use data diodes in

1 the internal network. We have done testing,
2 essentially, where we -- what we do is a broadcast
3 storm or a data storm, which -- essentially, what we
4 do is, we overload this network bus to the point where
5 it can no longer function, okay?
6 And that could happen in real life.
7 Actually, this is addressing your question. How that
8 happens in a closed network like this is if one of
9 these CP pairs loses its mind and just starts blurting
10 out data.
11 You do not want to take down your diverse
12 systems in the plant by that occurring. Therefore, we
13 designed around it, where the network just can be
14 totally lost.
15 MEMBER BROWN: You show six boxes that say
16 "network."
17 MR. HILMES: Yes.
18 MEMBER BROWN: Is that one network?
19 MR. HILMES: These -- what this is showing
20 here is -- all of these are actually on the network.
21 What this is showing is if there are process signals
22 that are going over that network.
23 MEMBER BROWN: Okay, but there's not six
24 networks.
25 MR. HILMES: No.

1 MEMBER BROWN: There is one network, and
2 all the processors feed into that one network.
3 MR. HILMES: That's correct.
4 MEMBER BROWN: And it's distributed to all
5 these other points based on addressing, et cetera, and
6 all that other kind of stuff.
7 MR. HILMES: Yes.
8 MEMBER SIEBER: And these are just
9 examples, the networks?
10 MR. HILMES: Yes. I was going to mention
11 that.
12 MEMBER BROWN: Well, there was a comment
13 somewhere, and I'm trying to remember that you went
14 away from a ring bus to some other type of --
15 MR. HILMES: That's on the process
16 computer.
17 MEMBER BROWN: Oh, okay. Not on this
18 thing.
19 MR. HILMES: Right. In reality, there are
20 two --
21 MEMBER BROWN: It's shown in the FSAR.
22 MR. HILMES: There is a paragraph
23 discussing it, but there is no details to that level.
24 MEMBER BROWN: No figures, no discussions
25 of how this operates, or why it's supposed to be good

1 or not good.

2 MR. HILMES: Not at this point.

3 MEMBER BROWN: Is there ever going to be,

4 to document this?

5 MR. HILMES: Steve, did we put any

6 discussion on the fault tolerance in there? State

7 your name.

8 MR. CLARK: I don't remember --

9 MR. HILMES: State your name.

10 MR. CLARK: Steve Clark again. The

11 segmentation analysis was actually done as a separate

12 calculation to demonstrate the reliability of the

13 network, and actually the reliability of the entire

14 system.

15 And that's a separate document. I believe

16 it's referenced in the FSAR, and then we did add a

17 description of the system to the FSAR, but I don't

18 know -- I don't believe we've added any figures or

19 anything like that yet.

20 MEMBER BROWN: You say yet.

21 MEMBER SIEBER: Because if you, later on,

22 were to modify the instrument system for this plant,

23 how would you do a 50.59 without a description of

24 what's there now, and the performance characteristics

25 there. Specify it, so you could make the --

1 CHAIRMAN RAY: Jack, you may need to speak
2 a little more loudly for the microphone.
3 MEMBER SIEBER: -- so that you could
4 actually make that comparison.
5 MR. HILMES: Well, how that is actually
6 controlled is, our segmentation analysis actually has
7 the description of the requirements that have to be
8 maintained. If we make some change in that, that
9 would affect that, we would have to revise that
10 segmentation analysis --
11 MEMBER SIEBER: Yes, you would.
12 MR. HILMES: -- at a basic --
13 MEMBER SIEBER: But it's not part of your
14 official plant description, so it doesn't really mesh
15 with the regulations, as I --
16 MR. CLARK: Well, one thing to remember is
17 that everywhere that this changes -- in other words,
18 if you go to like steam generator level control, where
19 it's discussed, the description has been revised to
20 include the fact that the DCS is used, and how the DCS
21 actually functions, whether it's looking at an
22 auctioneer high signal, or how it's working in there.
23 So we went through the entire FSAR, and
24 there's a fair number of changes associated with this.
25 In chapter 7, the primary change is we added the

1 description of the system to chapter 7.

2 MEMBER SIEBER: I think that's something

3 for the staff to look at, as to whether there's enough

4 detail in the FSAR.

5 MEMBER BROWN: Well, the SSE --

6 MEMBER SIEBER: So that later on, a 50.59

7 can be performed, if necessary, to support some

8 change.

9 MR. KOONTZ: This is Frank Koontz. I can

10 address a little bit of that. In our 50.59 process in

11 Watts Bar, and TVA in general, we train people to look

12 at both what's explicit in the FSAR and what's also

13 implicit. So if it has a design function that we talk

14 about in the FSAR, like a distributed control system,

15 then we also teach them to go to the basis documents,

16 and base their 50.59 analysis on that, also.

17 MEMBER SIEBER: That's good engineering

18 thinking, but perhaps not good legal thinking.

19 CHAIRMAN RAY: Well, we can take it up

20 with the staff in terms of how they assess the FSAR.

21 MEMBER SIEBER: Great.

22 CHAIRMAN RAY: Detail. But anyway, let's

23 continue to pursue the understanding.

24 MR. HILMES: Just a couple other bullets

25 here.

MEMBER SIEBER: Which page are you on, Steve?

MR. HILMES: Actually, I'm flipping back to 29 here, so I catch everything. Okay. Fifteen redundant processors. Each of the CP pairs has redundant power supplies going to it, so essentially from this day forward the plant, if you lose one power source, you will no longer put the plant in a transient from a process control system failure standpoint.

The data buses. There are actually two data buses, they're redundant of each other. Again, we assume we lose them both. We just assume the network goes away.

MEMBER SIEBER: But most of your controllers are single loop controllers, right? So the communications aspect of it -- you aren't really coordinating one controller with another one.

MR. HILMES: The only place where that gets difficult is, like I said, sometimes signals go into rod controls, and then they daisy chain over to the other systems. That's the Westinghouse Group concept of controls.

MEMBER SIEBER: It's not a top-down, one-train system.

1 MR. HILMES: No.

2 MEMBER SIEBER: Like supercritical coal

3 fired boilers that reduce the size of everything by

4 making sure every valve moves with every other valve,

5 you don't have that here?

6 MR. HILMES: Basically, just from the

7 shared controls, shared processors, the system pretty

8 much meets single failure criteria -- we call it fault

9 tolerance -- just off the fact of the way it's

10 designed. But we segmented the system to ensure the

11 interaction between systems.

12 MEMBER SIEBER: Okay.

13 MR. HILMES: Again, on here we have

14 multiple sensors coming in, whereas the old design,

15 you had to literally flip your feed flow transmitters

16 with a hand switch in the control room.

17 That is done now in logic, and so those

18 types of failures, other than giving you an alarm

19 telling you you've lost a sensor, the operator doesn't

20 see any change in the control of the plant.

21 MEMBER BROWN: Could you say that again?

22 MR. HILMES: In the areas where we have

23 redundant transmitters, for example steam flow, we

24 have two transmitters coming in --

25 MEMBER BROWN: From each loop? From each

generator?

MR. HILMES: From each -- yes, for each one.

MEMBER BROWN: So you have eight total steam flow detectors.

MR. HILMES: That's correct. We use a steam pressure, I believe, as a confirmatory for that system. And if you lose one of those two feed flows, it automatically flops over to the other feed flow.

MEMBER BROWN: Well, what are we talking about? Steam flow or feed flow?

MR. HILMES: Feed flow or steam flow, either one.

MEMBER SIEBER: Okay.

MR. HILMES: And essentially, from the operator's standpoint, he does not see any transient in the plant. He gets an alarm that tells him that --

MEMBER SIEBER: It flipped.

MR. HILMES: -- that he's lost a transmitter. Where we had three sensors, we've used a median signal in the majority of the cases. For example, steam generator level is -- you have three transmitters, so it's a median select.

MEMBER STETKAR: Steve, has that change been made over on Unit 1?

1 MR. HILMES: Unit 1 is actually working on
2 the design for this.
3 MEMBER STETKAR: So you still have the
4 manual --
5 MR. HILMES: It's still manual.
6 MEMBER STETKAR: Okay.
7 MR. HILMES: And one other point is,
8 everything still uses independent stations in the
9 control room. So from an operators standpoint, we
10 tried to make the controllers as similar to the
11 Foxboros as was possible.
12 We did make some tweaks in the design so
13 it was single failure-proof. They do not rely on soft
14 control under normal situations. They can use soft
15 control for maintenance purposes, but not for normal
16 operations, purely off of the station.
17 Okay, any other questions on process
18 control?
19 MEMBER STETKAR: Last bullet on this one.
20 I read -- there isn't much in the FSAR, there wasn't
21 much in the SER, and there's one bullet on here. Can
22 you explain to me, because I didn't have enough time
23 to read everything, what does that last bullet mean?
24 MR. HILMES: What that means is we have a
25 number of non-safety-related controls in the backup

control room.

MEMBER STETKAR: Okay.

MR. HILMES: We also replaced them with I/A. Those are independent of the rest of the network. There is no network connection at all. You have two pairs of CPs up there, and each of those are independent, and they have no ethernet connection. The only time you would hook it up is during an outage, if you need to upload new software.

MEMBER BROWN: You'd hook it up to the network, you mean?

MR. HILMES: Yes.

MEMBER STETKAR: Okay. That's why I was confused. There's no need, for example -- if I need to abandon the control room, for whatever reason, there's no need for me to now connect those CPs to the network, so that I have the indications and controls or whatever for the non-safety over in --

MR. HILMES: They are sitting there, running the software.

MEMBER STETKAR: Thank you.

MR. HILMES: They are self-contained.

MEMBER STETKAR: Thank you.

MR. HILMES: We did not want to leave any possibility of screwing up the backup controls.

1 MEMBER STETKAR: I am glad to hear that.
2 Thank you. It wasn't all that clear in the words that
3 I read.
4 MEMBER BROWN: Do they still get the
5 monitoring signals? I mean, if you're going to
6 control something, you've got to have some idea of
7 what's going on in the plant.
8 MR. HILMES: All of that -- actually, you
9 have much more, because you not only have the
10 hardwired normal monitoring signals, you also have
11 your -- over your data link, you can also get any
12 other state within that control system.
13 MEMBER BROWN: Okay. Let me make sure I
14 understand that. In the normal controls, I guess
15 you'd just think of the reactor plant controlling the
16 monitoring. And you've got the Eagle 21 that measures
17 everything, that sends out data somewhere. I presume
18 that goes to the control room.
19 MR. HILMES: Yes.
20 MEMBER BROWN: Both of the redundant
21 display processing systems, or what have you. Is that
22 -- and they use a certain set of sensors. I take it
23 you -- that same information is provided to the
24 auxiliary control room? Or is there a separate set of
25 instrumentation that goes with that?

1 MR. HILMES: No, it's a -- generally, it's
2 a separate set of controls.
3 MEMBER BROWN: Not controls,
4 instrumentation -- the monitoring -- the plant
5 information, does it come from separate sensors and
6 separate --
7 MR. HILMES: Generally separate, but there
8 are cases where there are isolators and the same
9 signal goes to both.
10 MEMBER SIEBER: Switches that you turn.
11 MEMBER BROWN: I'm not objecting. I'm
12 just trying to understand what it is, okay?
13 MR. HILMES: Yes.
14 MEMBER BROWN: I mean, look. You've got
15 -- the one figure that you had of any relevance at all
16 was 7.1-1, which showed process sensors going to four
17 different channels, which -- I presume those are all
18 independent sensors.
19 MR. HILMES: They are.
20 MEMBER BROWN: So each channel had its own
21 set, but there was no information on this thing as to
22 where the data went after it went and tripped
23 something. There was no main control rooms and
24 others, or the auxiliary control room. So that was my
25 question, is where -- is it the same set of stuff that

1 sends it to both the main control room and the
2 auxiliary control room? It's a fairly -- I'm not sure
3 that's a yes or no question, but that's what I'm
4 asking.
5 MR. HILMES: In some cases, they will be
6 repeated to the aux control room, but in those cases
7 they will be isolated.
8 MEMBER BROWN: Okay. I mean, you just
9 mean they can't backtalk.
10 MR. HILMES: That's correct.
11 MEMBER BROWN: That's fine. But there's
12 not a separate set of sensors that are associated with
13 the auxiliary control monitoring function, and a
14 separate set of instrumentation?
15 MR. HILMES: Not in all cases. There
16 isn't a yes/no to that. It's a mix of them. It's --
17 MEMBER BROWN: Is that described
18 somewhere? I mean, it's not discussed, that I could
19 find.
20 MR. HILMES: I don't think there's any
21 details --
22 MEMBER BROWN: There's nothing in the FSAR
23 on that, either?
24 MR. HILMES: -- available on the aux
25 control room. I'm not aware of anything.

MEMBER BROWN: I make the point, because we're being asked to make a determination that this is all okay, and yet where is it written down, other than in the answer to John's question?

MR. HILMES: Generally, through this process, there were many RAI questions, and --

MEMBER BROWN: I understand that, but we have thousands of RAIs, and what I tend to look at when I go to try to figure out what you're doing with this stuff is to go to the FSAR, and then look at the SER afterwards, to see.

I'd like to understand what your systems look like, and --

MEMBER STETKAR: A bit of our problem is, we don't necessarily read all of the RAIs and responses. And quite honestly, on this particular issue, reading the SER I was really confused. I hope the staff isn't confused, but reading the staff's words in the SER, they talk about "these are only needed when the control room is abandoned. The only time you have to abandon the control room is during a fire, and therefore you don't have to assume a fire with any other design-basis accident."

And that's what got me really confused about how these things are normally connected to the

aux control room. Because from what you tell me, all of that fire stuff has nothing to do with how the system works.

MR. HILMES: Bill will have to talk about that.

MR. CROUCH: Okay. Understood. We'll get that as a follow-up.

MR. HILMES: Moving to the last thing, which we sort of touched upon, the ICS, which is the process computer for the plant -- ICS stands for integrated computer system.

It's a system that at Unit 1, we've installed. It replaces the various tech support center computers and stuff, and integrates them into one computer system.

One thing about ICS. It is the only system that communicates with other systems. You know, as far as Ronan, Eagle, LEFM, everything -- if there's external communications, it goes to ICS. It doesn't go between the systems.

The major difference is Unit 1 had an old ring ethernet type configuration. Those really are obsolete. We've converted to a mesh-type network, treeing-type network. Unit 1 is actually doing the same change-out, due to obsolescence of their

1 equipment.

2 We've got upgraded servers, CPUs. And of

3 course, we've had to address detection issues, as far

4 as security issues. The software for Unit 2 is based

5 on the Unit 1 software. Obviously, there are

6 differences on control inputs and so forth. When

7 those control inputs are different, we had to make

8 adjustments.

9 I'd like to go to page 32, this figure

10 here, just to point out -- as I said, since this is

11 really the only connection to the outside world, it is

12 configured such that before you actually get to the

13 ICS there is a data diode which will only allow one-

14 way communications out of the ICS.

15 There are -- at each level of the network,

16 there is intrusion detection systems out there. And

17 additionally, for all the control systems, there are

18 firewalls installed. For safety-related systems,

19 there is strictly one-way communications via data

20 diode, or there just is no --

21 MEMBER BROWN: So those orange boxes are

22 firewalls?

23 MR. HILMES: What's that?

24 MEMBER BROWN: Those orange boxes are

25 firewalls?

1 MR. HILMES: They are firewalls. As you
2 see, they are only on the non-safety-related
3 components.
4 MEMBER BROWN: Well, you've got one up in
5 the -- well, I guess the TSC is a non-safety-related
6 function.
7 MR. HILMES: Yes.
8 MEMBER BROWN: But I mean, the Foxboro
9 stuff isn't -- I'm confused here. On some of the
10 Foxboro items, aren't those part of the plant
11 monitoring systems? I'm going back to find out where
12 you --
13 MR. HILMES: Foxboro has analogue
14 indications that come out of Foxboro, and it also can
15 send digital data to the process computer as far as
16 information. It is set up not to receive data.
17 MEMBER BROWN: What kind of --
18 MR. HILMES: It is not safety-related.
19 Foxboro I/A is not safety-related.
20 MEMBER BROWN: If they're using the aux
21 feed system, which you refer to as a safety-related
22 system --
23 MR. HILMES: Those are Spec. 200. Spec.
24 200 is an analogue control.
25 MEMBER BROWN: So there's a difference

1 between those --

2 MR. HILMES: Yes. This is talking about

3 Foxboro I/A.

4 MEMBER BROWN: What does I/A mean?

5 MR. HILMES: Intelligent Automation. It

6 is the distributed control system.

7 MEMBER BROWN: Another minor nuance, not

8 able to be found.

9 MR. HILMES: Understood.

10 MEMBER BROWN: Or major nuance, depending

11 on how you want to --

12 MEMBER SIEBER: They're used more in the

13 chemical industry than in power plants.

14 MR. HILMES: We have actually used it

15 quite a bit in TVA. It's the -- we prefer their

16 architecture over the others we've looked at.

17 MEMBER BROWN: Each of those blue lines,

18 is that a -- is each of those a process computer?

19 MR. HILMES: No. This is strictly the

20 network levels within the system. In other words, as

21 you go up, you have different levels of networks.

22 These would be essentially your process computers

23 right here.

24 MEMBER BROWN: The things called ICS A, B,

25 et cetera?

1 MR. HILMES: Yes. We have -- our ICS is
2 redundant. It has two processors. If you lose one,
3 you still have the system functioning. Unit 1 and
4 Unit 2 are separate, however they do communicate with
5 one another, since there are some parameters that are
6 common between the two.
7 MEMBER BROWN: So if you lose one of them,
8 you lose PAMS. Is that correct?
9 MR. HILMES: No, you do not.
10 MEMBER BROWN: Well, you've only got one
11 PAMS shown on here, I guess. That's why I ask the
12 question. It's a Common Q, I figured that was a PAMS.
13 MR. HILMES: Common Q is only feeding the
14 ICS information. If you lose the whole system, it has
15 no impact on any of the controls or any of the safety-
16 related systems.
17 MEMBER BROWN: Well, how's the PAMS
18 system, then -- how's that information get to the main
19 control room?
20 MR. HILMES: It has individual displays
21 themselves that are up in the control room,
22 specifically for PAMS. Not --
23 MEMBER STETKAR: Let's be careful on
24 throwing around tons of acronyms here. PAMS --
25 MEMBER BROWN: Post-accident monitoring

1 system. I'm sorry.

2 MEMBER STETKAR: But PAMS --

3 MR. HILMES: Common Q PAMS.

4 MEMBER STETKAR: But PAMS is strictly the

5 three parameters through the Common Q, in your

6 vernacular?

7 MR. HILMES: That is correct.

8 MEMBER STETKAR: Safety Parameter Display

9 System, SPDS, all of the other parameters, come -- not

10 all, the vast majority of them come through this.

11 MR. HILMES: You're correct. That is

12 correct.

13 MEMBER STETKAR: So be careful when we're

14 talking about PAMS, because it's --

15 MEMBER BROWN: I understand. Thank you.

16 MEMBER STETKAR: -- not this.

17 MR. HILMES: SPDS, you are correct, is --

18 MEMBER STETKAR: SPDS is mostly this.

19 MR. HILMES: -- resident in this system.

20 MEMBER STETKAR: Okay. Thank you.

21 MR. HILMES: Now, as he said, there are

22 other hardwired indications that are in the control

23 room. Since this is not a qualified system, you can't

24 rely on that for your category -- type A variables, or

25 type A and type B, I believe.

1 MEMBER STETKAR: A1s, anyway. This --
2 there was some discussion -- again, pictures help.
3 There was some discussion about the ability of this
4 system to store and trend parameter values over time.
5 MR. HILMES: It does.
6 MEMBER STETKAR: Which apparently Common
7 Q has a fairly limited storage and trending function,
8 at least from what I've read. Again, it's --
9 MR. HILMES: Warren, what's the historical
10 on Common Q?
11 MR. ODESS-GILLETT: This is Warren Odess-
12 Gillett, from Westinghouse. The time limit of the
13 trending on the operator's module for the Common Q
14 Post-Accident Monitoring System is one hour.
15 MEMBER STETKAR: One hour. Okay. And
16 this system has a longer trending interval available
17 to the operators?
18 MR. HILMES: You essentially can -- we
19 have a -- it can -- we essentially have timeless
20 storage.
21 MEMBER STETKAR: Okay. Timeless storage
22 is limited, for example, by how long I have
23 electricity for these things. What's the rated
24 lifetime on the non-1E 250 volt batteries at Watts
25 Bar?

1 MR. HILMES: Our station blackout coping
2 is a four-hour coping period.
3 MEMBER STETKAR: And that's safety-related
4 stuff. What's the non-1E 250 volt DC batteries?
5 MR. HILMES: It's also based on a four-
6 hour --
7 MEMBER STETKAR: Four hours?
8 MR. HILMES: Yes.
9 MEMBER STETKAR: Okay.
10 MR. HILMES: That's the way it was set up.
11 Now --
12 MEMBER STETKAR: So after four hours, you
13 can't trend anything.
14 MR. HILMES: That's -- if you lose all AC
15 power, and --
16 MEMBER STETKAR: If you lose all AC power
17 in a station blackout.
18 MR. HILMES: That is how long we have
19 addressed it in the coping period.
20 MEMBER STETKAR: Okay. Thank you.
21 MEMBER BROWN: This big, big, big data
22 diode that you show up there, a very impressive data
23 diode.
24 (Laughter.)
25 MEMBER BROWN: Graphically intuitive.

1 What is the nature -- I didn't -- there was -- I could
2 not find any description of the nature of this data
3 diode. Is it a -- and my question goes into the form
4 of, that there's two questions.
5 How isolated is it from this, whatever
6 this PEDS corporate Watts Bar network is? Is it
7 microprocessor-based, software-controlled?
8 MR. HILMES: It is.
9 MEMBER BROWN: So it can be -- so it's
10 told to be one way based on software commands within
11 it, as opposed to a hardwired cyber-protected one-way
12 data transmission path?
13 MR. HILMES: It's a cyber-protected one-
14 way transmission path.
15 MEMBER BROWN: Well, that's --
16 MR. HILMES: But it actually is two
17 computers, okay? And between the computers, there is
18 only a transmit line to the other computer. So it
19 strictly streams data from one computer to the other.
20 MEMBER BROWN: The diode is two computers?
21 MR. HILMES: Yes.
22 MEMBER BROWN: And you're -- I'm not
23 worried about changing between them. I'm talking
24 about going outward to the network, the corporate
25 network, back and forth. That's where your

1 interchange is most critical.

2 MR. HILMES: Yes.

3 MEMBER BROWN: From outside, external.

4 MR. HILMES: That's right. Outside cannot

5 communicate to the --

6 MEMBER BROWN: Okay. My question is --

7 MR. ARENT: Excuse me, this is Gordon

8 Arent. I'm the general manager of licensing for TVA.

9 We need to be careful, when we get into a discussion

10 on data diode, from a safeguards standpoint.

11 So we can talk about it at a high level,

12 but when we get into the cybersecurity aspects, we

13 just have to be very careful as to where we draw the

14 line on the level we're speaking --

15 MEMBER BROWN: Okay.

16 MR. ARENT: We can go into a closed

17 session, if you'd like.

18 MEMBER BROWN: When are we going to talk

19 about cybersecurity aspects? At some other meeting?

20 That's fine. I mean, that's okay with me.

21 MR. MILANO: Cybersecurity we talk about

22 in the next ACRS subcommittee meeting.

23 MEMBER BROWN: Okay. Well, how about

24 putting that on the list of things to give us in

25 immaculate detail, as to how this --

MEMBER BLEY: But when he's talking detail, is there an actual physical --

MEMBER BROWN: Non-changeable.

MEMBER BLEY: -- physical system that prevents that communication, or is it software-controlled?

MEMBER BROWN: Right.

MEMBER BLEY: And if it's software-controlled, how is it? And how do we ensure that it's --

MEMBER BROWN: The concern there is, somebody from the outside being able to interfere and tell it to turn itself around, that's all. So we'll put that off.

CHAIRMAN RAY: All right. We'll do that in the October meeting.

MEMBER BROWN: I just wanted to make it clear what we were looking for.

CHAIRMAN RAY: All right.

MR. HILMES: And that's it on the process computer.

MEMBER STETKAR: One last question on the process computer. Are -- and this, again, is a bit outside of the I&C stuff. But on Unit 1, I recognize the computers are different, and all that kind of

stuff.

Are the operators ever trained -- do they run through drills where they have no information from the process computer? In other words, when you go through simulator training, do you black it out, and just force them to use what is available from the safety-related displays and stuff?

MR. HILMES: Rep drills. There are scenarios where they --

MEMBER STETKAR: I'm talking more than a single failure, now. I'm talking, take this thing out.

MR. HILMES: And I have personally been in rep drills at TVA --

MEMBER STETKAR: Oh, okay.

MR. HILMES: -- where we have lost the process computer.

MEMBER STETKAR: Okay, good. Thank you. Good.

MR. HILMES: One other thing I want to mention is per the -- actually, this isn't specifically written down. We've talked about everything through 34. Oh, I'm sorry. Slide 34. Go to slide 34. Sorry, I'm getting out of phase. I was going to just status you on where we are on testing

1 from a hardware standpoint.

2 All the hardware for the I&C systems has

3 been built. It has all undergone FAT testing, and any

4 issues that came up with the FAT testing are resolved,

5 or there is one open item still in Eagle which we have

6 to implement in the plant.

7 Site acceptance testing is ongoing. A

8 number of the systems, for example Eagle 21, the site

9 acceptance testing has been completed. Foxboro I/A is

10 up and running, so we're at that point where most of

11 these are operating.

12 And pre-operational testing is in

13 progress, or the testing is being developed at this

14 point in time.

15 MEMBER STETKAR: Steve, I wasn't going to

16 ask this, but you had to bring up this slide. I read

17 that there was an issue when you were doing the

18 Factory Acceptance Testing on the Unit 2 Eagle 21,

19 where you discovered that the configuration that you

20 had for Unit 2 had some problems.

21 And you traced that back to the fact --

22 you discovered that a math coprocessor chip had been

23 replaced in the Unit 1 system, and had resolved that

24 problem.

25 But apparently that chip hadn't been

1 replaced in the system that was being used for the
2 factory acceptance tests on Unit 2. You know, you
3 replaced the chip, and that function worked.
4 That leads me to the question of, how do
5 you ensure that indeed all of the hardware
6 replacements that have been made on Unit 1, are indeed
7 now installed in your Unit 2 system?
8 Because that change got all the way to
9 factory acceptance testing without somebody finding
10 it.
11 MR. HILMES: Yes. That was a -- what
12 actually happened there was that, prior to building
13 the Watts Bar Eagle 21, Westinghouse had qualified
14 this other math coprocessor, and they were using it
15 interchangeably between the two.
16 It just so happens that what Watts Bar had
17 were the faster math coprocessor, okay? It was that
18 way from day one on Unit 1.
19 MEMBER STETKAR: Oh, okay.
20 MR. HILMES: Did the original factory
21 acceptance test, it was with the faster coprocessor.
22 Yes, we discovered this when we were trying to upload
23 data to -- upload parameters to the Eagle 21 ranges
24 and so forth.
25 There's a cycle that it goes through when

1 it's uploading. Because Eagle 21 is deterministic,
2 with the slower processor it did not have sufficient
3 time to do that full upload.
4 When we identified that, we went and -- we
5 actually ended up going to the Unit 1. It just so
6 happens we were talking about board replacements, and
7 we were going through a cycle of board replacements.
8 We looked at Unit 1, and we noticed the delta in the
9 coprocessor.
10 So that's how it was identified. Again,
11 that was detected during factory acceptance testing,
12 though. They did identify that it did not work
13 properly.
14 MEMBER STETKAR: That's good. That's why
15 you do that testing. We caught that one on that
16 particular test.
17 MR. HILMES: From a design change
18 standpoint, what we did as part of doing Unit 2 is, we
19 went through every design change that was ever
20 implemented on Unit 1, and we ensured ourselves that
21 either the design change was -- we had a package out
22 there to implement it on Unit 2, or it was not needed,
23 because since then we've replaced the system entirely,
24 or something like that.
25 But we went methodically through every DCM

1 that was out there.

2 MEMBER STETKAR: That's good. And from

3 what you said, in this particular instance, it wasn't

4 really a design change. It just happened to be the

5 original installed boards on Unit 1 had the faster

6 chip on them.

7 MR. HILMES: That's correct.

8 MEMBER STETKAR: So it was -- huh.

9 CHAIRMAN RAY: Okay. Now, I --

10 MEMBER BROWN: One other question, just to

11 be -- back on slide 32, the TSC is shown as coming

12 through a firewall from the two networks, two process

13 computer networks.

14 MR. HILMES: Yes.

15 MEMBER BROWN: Single firewall, that's

16 what it looks like, on the box. And I guess -- and

17 this is based on just experience, no other basis for

18 this question, in that firewalls I have found in many

19 circuits start blocking information, because they get

20 confused.

21 And so this is a point of single data --

22 is it one firewall, are there multiple display systems

23 or computer systems in the TSC that get independently

24 from each of these two channels, or trains, or

25 whatever you want to call them? Or is it all

1 processed through one firewall that --

2 MR. HILMES: I know there are independent

3 firewalls on Unit 1 and Unit 2, and also to the

4 simulator at that point, I understand.

5 MEMBER BROWN: Is that what this means in

6 here, is -- these are -- the right hand side is Unit

7 2, and the left hand side is Unit 1?

8 MR. HILMES: Generally, that is correct.

9 This is Unit 2, this is Unit 1. We have a common TSC,

10 okay, for both units. And these TSC computers do go

11 to two separate firewalls here, for Unit 1 and Unit 2.

12 I'll have to go back and check to make

13 sure. We have multiple computers up there. I'm not

14 sure offhand if they're in multiple firewalls,

15 independent ones for each one.

16 MEMBER BROWN: I'm just curious as to how

17 the data from Unit 2 gets segregated from Unit 1, if

18 it's all into one network. However it gets processed,

19 it's just -- it's not clear how --

20 MR. HILMES: Yes, this is really three-way

21 communications here. You're going to TSC, but you've

22 also got communications going back and forth between

23 here.

24 Because things like the met tower only go

25 into the Unit 1 computer, so you have to somehow get

1 that information over to the unit 2 tower.
2 MEMBER BROWN: Met tower?
3 MR. HILMES: Meteorological.
4 MEMBER BROWN: Okay. Weather.
5 MR. HILMES: Weather. So it's a little
6 more complicated than this pictorially is showing
7 here.
8 CHAIRMAN RAY: Okay.
9 MR. HILMES: I have a very detailed
10 drawing I can provide you with.
11 MEMBER BROWN: Well, it would be nice if
12 that was included in the technical data that is
13 generally based on this. That would have made stuff
14 clearer.
15 MR. HILMES: Okay.
16 CHAIRMAN RAY: Let me try and summarize
17 where we are right now, from a time management
18 standpoint. We're going to have to forego discussion
19 of construction status and schedule, because that's a
20 lower priority as far as this meeting is concerned,
21 and I think as far as the applicant is concerned in
22 communicating with the subcommittee.
23 We've been spending time on trying to get
24 information that wasn't understood or perhaps not
25 available, so it's been a productive use of the time.

1 There is, at this point, I think an overarching
2 question about configuration -- the licensing basis
3 configuration disclosure, and how that can be used for
4 configuration management going forward. 50.59 was
5 referred to, for example.
6 To what extent is the information that
7 we're relying on only in RAI responses, for example,
8 as opposed to being in the FSAR? We're going to want
9 to ask the staff about that, and what their take on
10 that is.
11 And I think, rather than -- we're going to
12 have to take a break, and we are absolutely going to
13 stop at noon, because we've got other things scheduled
14 behind us. So rather than go to the applicant's
15 presentation on the reactor at this point, we're going
16 to take a break.
17 We're going to then ask the staff to do
18 their portion of what you've been talking about, so
19 that we can get their assessment and insights in terms
20 of the disclosure of the information that we're asking
21 about, and how that's going to be managed going
22 forward.
23 In other words, are we going to add
24 information, or does it already exist in places that
25 we haven't been able to get access to? And to finish

1 up the topic of I&C, because that's the most important
2 thing, and I think that's what you will get the most
3 benefit from, as well of the rest of us, is to get
4 that discussion taking place.
5 We've got two more subcommittees, at
6 least, as I mentioned, and the full committee isn't
7 for 10 months. So the most important thing for us to
8 do is to get information that is of the kind that
9 we've been discussing.
10 We will need to make sure we give Region
11 II their opportunity to make any presentations to us
12 that have to do with the activities that they're
13 responsible for. And then we'll see where we are when
14 that's done, and how much time -- we may defer chapter
15 4 to the next meeting. I don't know.
16 But we're going to have to stop at noon,
17 and I think that we're best served by focusing on this
18 area which is somewhat problematic from the standpoint
19 of our review. I mean, you can answer a lot of
20 questions, but then the lingering, unanswered question
21 is 10 years from now, how do we know that that is
22 accessible in the licensing basis, so you can
23 understand when you change it, as inevitably will
24 happen, is that still within the licensing basis, is
25 an amendment required, or whatever.

1 And that's where we're going to go for
2 now. So we're going to stop now. I'm going to ask
3 everybody, because of the time constraints that we
4 have here, to be back and ready to go at 10 after
5 10:00.
6 (Whereupon, the above-entitled meeting
7 went off the record at 9:58 a.m. and resumed at 10:09
8 a.m.)
9 CHAIRMAN RAY: All right. We will resume
10 now. Thank you. Pat, I see we are ready to delve
11 into some detail here, it looks like, which is fine.
12 But I would appreciate if we could begin with some
13 response, I guess, or reaction or comment by staff on
14 how we discriminate between things that we learn about
15 the current set of I&C equipment and that which is in
16 the licensing basis and, therefore, serves as a
17 requirement for the inevitable changes that will take
18 place, unless an amendment to the licensing basis is
19 sought.
20 That's a very murky thing for us, at this
21 point in time. We don't know whether we are just
22 being told well, this is the way it is today, but, you
23 know, when the next generation is installed under
24 50.59, if that were to occur, we could -- it could be
25 different.

1 As compared with -- now, this is the basis
2 on which the plant is being licensed and if it
3 changes, then we would expect to see an amendment.
4 That's something that, at least, I am trying to
5 understand better. And normally, that would be just
6 looking at the Design Certification process, for
7 example, issues which are addressed in an RAI
8 generally then wind up with some conforming amendment
9 to the Design Certification that incorporates that
10 information.
11 This is different because we are talking
12 about an existing plant and not a certified design.
13 But nevertheless, the same principle is at work,
14 inevitably, and so if you could comment about that a
15 little bit? When you get a response back from an RAI,
16 how do you decide, when do you decide that well, we
17 would like to see that in the FSAR?
18 MR. MILANO: When we get our responses
19 back from the RAIs, you know, we -- from the -- it's
20 really up -- part of it is up to staff discretion. We
21 do have some level of dialogue and you will see and
22 you have probably seen some of this where we talk
23 about the -- in the SER the dialogue that has
24 transpired. And we talk to our evaluation or
25 assessment of the RAI responses.

1 You are correct in the fact that there is,
2 at some point, a determination of whether that
3 information needs to be documented into the FSAR. And
4 if it doesn't -- if it isn't currently there, you will
5 see we will have a confirmatory item that TVA needs to
6 put that into the FSAR.
7 We are not going to discuss it today, but
8 in some of the -- in our Section 9 discussion with
9 regard to the servicewater systems, we, indeed, had
10 that situation. And while the staff has come to the
11 conclusion it was acceptable, we have three open items
12 for each one of those sections to have the FSAR
13 updated.
14 So the bottom line is it is somewhat
15 discretionary and up to the staff.
16 CHAIRMAN RAY: No, that's fine. I mean,
17 I think it is appropriate that it would be a
18 discretionary matter, but like I said, we would like
19 to know which way it is whenever -- at least it's
20 important to what we do.
21 And so with that having been said and you
22 have listened to the discussion up until now, let me
23 ask you to proceed with staff presentation on I&C
24 then.
25 MR. MILANO: Yes. We are going to start

on No. 9, which is up there right now. And again, I'll just reintroduce the two staff members that are going to be doing most of the talking this morning. You have got Mr. David Rahn and Mr. Norbert Carte. Mr. Carte will be doing most of the -- he did most of the review for the Common Q Platform, the PAM system and stuff. And Mr. Rahn will do predominantly the remaining portions of the I&C.

CHAIRMAN RAY: Okay.

MR. MILANO: And with that, I'll turn it over to you.

CHAIRMAN RAY: Okay. That's fine. And I should have voted. I think we all understood that there may be information, at some point, that we should defer to a closed meeting, because of the safeguards implications. Okay.

MR. RAHN: Okay. Thank you very much, Mr. Chairman and Members of the ACRS Committee. I appreciate your concern regarding the slides that we have available today. You know, our instructions were to prepare for a half hour presentation and just summarize about two years of evaluation that was performed by our staff.

There are nine members of our staff that participated in this particular evaluation. Several

1 -- there were 45 subsections of the FSAR that were
2 prepared individually with safety analyses.
3 And so a lot of the work that we did is in
4 the details of what was submitted as well as what we
5 asked for. And I'll get into some of what the types
6 of information that we asked for that was actually
7 then requested to be put onto the docket for us.
8 In general, we did spend roughly 7,000
9 plus man-hours performing this evaluation. A lot of
10 this evaluation, the trick and the challenge for us,
11 was to find out what has remained the same within a
12 Unit 2 design compared to the design that was
13 evaluated for Unit 1?
14 And then which things have been upgraded
15 on Unit 1 which are going to be upgraded on Unit 2 and
16 verify whether or not we are meeting the licensing
17 basis for that. And finally, anything that is
18 considered brand new for Unit 2, we evaluated that to
19 our current evaluation criteria.
20 The scope covered the -- several key focus
21 areas in the I&C design process, which I'm going to go
22 through quickly. And we will talk to you briefly
23 about some of the areas that we covered, but we will
24 be happy to answer questions to the best of our
25 ability and any other questions on any other areas

1 that you would like us to talk about.

2 I'm also going to talk a little bit about

3 the current status of where we are, which is very,

4 very nearly complete and identify what are the

5 remaining issues to be worked on.

6 So could I have the next slide, please?

7 So essentially, to start this process, we looked at

8 starting with, approximately, Amendment 92 of the FSAR

9 and although we considered all the way up through

10 Amendment 104, the bulk of our I&C work was documented

11 in Amendments 93 through 102, essentially.

12 And 103 and 104 contain information that

13 we requested to be put into the FSAR through our

14 evaluation process. So the later amendments start to

15 document more information than was originally supplied

16 to us for -- on the docket.

17 MEMBER BROWN: Dave?

18 MR. RAHN: Yes?

19 MEMBER BROWN: Relative to that, when I

20 was looking -- this is I need an information

21 response --

22 MR. RAHN: Yes.

23 MEMBER BROWN: -- on this. I looked at

24 98. I looked at 100, 101, 102 and 103.

25 MR. RAHN: Yes.

1 MEMBER BROWN: And I noticed that they
2 weren't all complete. In other words, 102 only has
3 four sections --
4 MR. RAHN: Sections. Yes, described data.
5 MEMBER BROWN: -- something else only has,
6 I don't know, one of your other ones had three
7 sections or something like that. And one of them, I
8 think, 100 was relatively complete, I think.
9 MR. RAHN: Yes. It --
10 MEMBER BROWN: But I was off doing
11 comparisons and trying to track. And 103, I think,
12 was complete also. My memory is failing me right now.
13 MR. RAHN: Right. I believe you are
14 correct. There were -- some were piecemeal.
15 MEMBER BROWN: But that was a difficulty.
16 MR. RAHN: Yes.
17 MEMBER BROWN: That was a difficulty
18 trying to find pieces of stuff and going back to FSARs
19 that were only partial.
20 MR. RAHN: Right.
21 MEMBER BROWN: Particularly on the post-
22 accident monitoring system, which was left out of a
23 number of them.
24 MR. RAHN: Yes.
25 MEMBER BROWN: And figures were deleted.

1 I mean, there was a whole section that said there are
2 no figures. And the references was left out of
3 Chapter 7. I was never able to find a list of
4 references, even though there were a lot of references
5 called out in the text.
6 MR. RAHN: Yes. This has been a challenge
7 for us as well, Member Brown.
8 MEMBER BROWN: So I'm correct in my
9 perception? I wasn't missing something?
10 MR. RAHN: Yes, you were.
11 MEMBER BROWN: Okay.
12 MR. RAHN: No, no. And to be honest, to
13 do the evaluation of what was already evaluated in
14 Unit 1 to make a determination whether it is the same
15 or not was also a challenge, because the -- from 1996
16 onward, several supplemental SERs were issued. And
17 the work that was done in those supplemental SERs was
18 also done in a piecemeal fashion. Some of it
19 identifying ways in which previous items are
20 identified could be closed and other issues where it
21 was new information.
22 And so it has been a fairly significant
23 challenge for us to identify what was the original
24 safety evaluation basis, not just the design basis for
25 that design. So in doing so, we had to look at lots

1 of old paper.

2 And so to give you an idea of what kind of

3 paper, we looked at all kinds of 50.59 documentation

4 that affected I&C design. We divvied them up amongst

5 the staff according to topical areas. And we also

6 looked at License Amendment Requests that happened on

7 Unit 1 since that time.

8 And that gave us kind of -- and from that,

9 we also evaluated what was described in the

10 supplemental safety evaluation reports. And so the

11 combination of those three stacks of paper, if you

12 will, gave us our basis for making conclusions as to

13 whether the design is the same or not the same.

14 And quite frankly, that was a challenge

15 for us.

16 MEMBER SIEBER: Did you review the updates

17 to the Unit 1 FSAR to see if they adequately reflected

18 changes made under 50.59?

19 MR. RAHN: No, we did not. We did not.

20 MEMBER SIEBER: Do you think somebody

21 ought to do that.

22 MR. RAHN: We -- I don't know. What do

23 you think, Norbert? I don't think that our basis --

24 because what we did was we followed a procedure in-

25 house, which is -- we call it -- hold on.

1 Essentially, it's the process was to compare old
2 designs versus new design not to confirm that Unit 1
3 was correctly reflected.
4 MEMBER SIEBER: Yes, well, that's part of
5 it. That should be an internal process that the
6 licensee does.
7 MR. KOONTZ: We do have --
8 MEMBER SIEBER: And maybe I can ask the
9 licensee. When you do 50.59 modifications to any
10 system in the plant, is there a step in your
11 procedures for 50.59 to look at the FSAR to make sure
12 that it is always up to date in accordance with the
13 annual updates?
14 MR. RAHN: Well, but --
15 MR. KOONTZ: This is Frank Koontz. I
16 think I can address that. We do look at the FSAR when
17 we do 50.59 processes.
18 MEMBER SIEBER: Right.
19 MR. KOONTZ: And we would look to see if
20 the FSAR descriptions are accurately describing the
21 system, if that's what you are asking me?
22 MEMBER SIEBER: That's what I'm asking.
23 Now, the question is is there enough detail there to
24 be able to reflect what exists, so that you can
25 reference that for future evaluations?

1 MR. MILANO: Within Office of NRR, we have
2 an office instruction and we do a triennial or --
3 excuse me, once every three year inspection of the
4 FSAR against the 50.59 changes to make sure that they
5 were adequately reflected into the FSAR or USAR for
6 Unit 1.
7 We don't do every single one of them. It
8 is a sample and we increase, you know, depending on
9 what we find, we may increase the sample size.
10 Mr. Raghavan?
11 MR. RAGHAVAN: My name is Raghavan. I'm
12 a Sandia Project Manager at the Watts Bar Branch.
13 Under the regulations, all 50.59s have to be reviewed
14 under Part 50.71(e).
15 MEMBER SIEBER: Right.
16 MR. RAGHAVAN: To be looked at that they
17 are incorporated into the FSAR. And under the -- also
18 the regulations, we periodically review all the
19 actions that have been taking place and incorporated
20 in the updated FSAR.
21 So to answer your question, the FSAR
22 should reflect all the changes that have taken place
23 by way of any amendments, any 50.59s or any responses
24 that they have provided, TVA has provided, to the NRC.
25 They all have to be incorporated as part of 50.71(e).

1 MEMBER SIEBER: Okay. I guess I could
2 draw a conclusion from this in that the staff had to
3 do a lot of work in order to piece together what the
4 design basis was.
5 MR. RAGHAVAN: Yes.
6 MEMBER SIEBER: Because it really wasn't
7 reflected in any single place, that's why you ended up
8 with a three-step process. The FSAR, in my
9 impression, is pretty general.
10 MR. RAGHAVAN: Yes.
11 MEMBER SIEBER: In describing what is
12 going on. And I had extreme difficulty trying to
13 review where we stand today with the ultimate design
14 of the system to see if it meets the requirements,
15 because from a public information standpoint, all the
16 details aren't there.
17 MR. RAHN: Right.
18 MEMBER SIEBER: And I don't know whether
19 regulations require how much detail that requires, but
20 I do know what licensees go through in the 50.59
21 process and where they looked. And it should be
22 explicitly stated what the basis is for each one as
23 opposed to making a lot of implicit assumptions that
24 it's okay.
25 And that's why we are struggling with the

1 I&C area.

2 MR. RAHN: Yes. Yes, I appreciate that

3 concern, because it is difficult. If you -- as you

4 read Supplemental Safety Evaluation 23, you will

5 notice that nearly every page is littered with ADAMS

6 accession numbers and reference documents that we had

7 to go extract from --

8 MEMBER SIEBER: Right.

9 MR. RAHN: -- the design evaluation and

10 make sure that we had a reference to it to identify

11 what was our basis for performing the evaluation.

12 MEMBER SIEBER: Well, I have sympathy for

13 the reviewer and also for our own Members trying to

14 figure out what was going on.

15 MR. RAHN: I believe though the challenge

16 in the future in making sure that either 50.59 or a

17 License Amendment Request adequately identifies what

18 the design change is and on what basis the previous

19 evaluation was made. It's going to have to take into

20 account all those references that we made into our

21 safety evaluation supplement.

22 MEMBER SIEBER: I think for the future,

23 for this licensee and every other licensee, we ought

24 to sort of sharpen up the practice so we really

25 understand what the design basis is and that expedites

1 50.59 changes or references from one unit to another.
2 And I think that would be helpful.
3 MR. RAHN: Yes.
4 CHAIRMAN RAY: Well, we will --
5 MEMBER SIEBER: I'm not clear that it is
6 required.
7 CHAIRMAN RAY: We will, I think, have to
8 get back to this subject later. I'll note that just
9 Chapter 7 in the SER is 175 pages.
10 MEMBER SIEBER: Yes.
11 CHAIRMAN RAY: And it is very difficult to
12 find out -- figure out what -- leaving aside that we
13 can perhaps easily find out what TVA's current design
14 intent is, what we actually have to rely on is, as you
15 have said here, one reference that down the road
16 people will have to go back and try and figure out
17 what on earth was the basis for the --
18 MEMBER SIEBER: Right.
19 CHAIRMAN RAY: -- licensing approval.
20 Anyway, given that we have got an hour and a half to
21 go now, and not any more than that, let's proceed on
22 through with your presentation.
23 MR. RAHN: Okay.
24 CHAIRMAN RAY: Taking note of this.
25 MR. RAHN: Before leaving this slide, I

1 want to make one mention that not in all cases do we
2 have sufficient documentation to help us to make our
3 decision, so we burned a couple of audits of some of
4 the design and testing processes that were happening
5 at the Westinghouse facility.
6 So, for example, on the Eagle 21 factory
7 acceptance test and also some of the Common Q software
8 development qualification processes.
9 Could I have the next slide, please? So
10 as I mentioned before, we had to break this into three
11 categories in order to complete this identification of
12 what has changed and what is the same. But per LIC-
13 110, the process that we followed was to identify
14 those particular changes that were made that are
15 really deltas between Unit 1 and Unit 2. So that also
16 forced us to make sure we understand what was in Unit
17 1.
18 Next slide, please. So in general, all of
19 our I&C focus areas pretty well-covered the same
20 topics from one application to the next. The
21 challenges are how do these topics apply given the
22 delta in technologies that are being applied?
23 But the most important are evaluations of
24 independence between the controls and the protection
25 systems, between reactor controls and protection

1 systems, in particular, but as well as BLP controls.
2 We also will make sure that we have
3 addressed the criteria for maintaining independence
4 and isolation between safety and non-safety systems.
5 We look at the effects of a single random failure on
6 the accomplishment of safety functions and that's not
7 just safety-related components, but non-safety-related
8 components.
9 We also look to make sure that anything
10 that was done for the current standards for Watts Bar
11 Unit 1 was qualified at least to those standards and
12 any piece of new equipment that was purchased and
13 dedicated for a safety-related function, we made sure
14 met the new staff criteria for environmental
15 qualification, seismic, EMI and RFI testing.
16 MEMBER BROWN: That was one of the
17 questions I had when you all had initially addressed
18 that. The fundamental basis and the lead-in was 279.
19 MR. RAHN: Yes.
20 MEMBER BROWN: And I got a little fuzzed
21 up when I was trying to figure out when they built all
22 the new stuff, this -- you are telling me here that it
23 is going to meet 603. It will meet the --
24 MR. RAHN: Yes.
25 MEMBER BROWN: -- current requirements as

1 opposed to the 20-year-old 1971 279 requirements?
2 MR. RAHN: That's correct. And if we have
3 some time, Norbert is prepared to talk a little bit
4 more to you -- tell about how we tackled that issue.
5 MEMBER BROWN: Okay. All right. That's--
6 I just wanted to make sure I confirmed my
7 understanding.
8 MR. RAHN: Yes. In addition, we applied
9 the particular regulatory guide or industry code and
10 standard or regulatory issue summary or whatever kind
11 of topical area that would be applicable to the system
12 that we were reviewing.
13 Okay. So I happened to pick RPS and ESF
14 on here, but we, you know, can talk about some of the
15 other systems if you have some particular questions.
16 We tried to, in order to prepare for this particular
17 presentation, get highlights of what we thought you
18 might be interested in, but we can also address other
19 areas.
20 In particular, in the area of the Eagle 21
21 Plant Protection System, which feeds both RPS and the
22 ESFAS systems, we did learn that the configuration of
23 Watts Bar Unit 2 is identical to that of Unit 1. And
24 that took a little bit of doing. And Norbert might
25 even be able to talk a little bit about that as well,

1 if you are interested, because he performed an
2 evaluation of a lot of the configuration control
3 documentation at the Westinghouse plant.
4 In addition, we evaluated a lot of the
5 board changes that Steve Hilmas was mentioning
6 earlier, as well as, I don't think he mentioned, but,
7 we identified that there are also better power
8 supplies in general.
9 First of all, there are four separate
10 instrument buses, not just two, and they use
11 combinations of those four to address partitioning as
12 well as controls in a much better fashion than Unit 1
13 had. Although, Unit 1 is certainly adequate.
14 MEMBER BROWN: You know, it's interesting
15 you bring that up.
16 MR. RAHN: Yes.
17 MEMBER BROWN: Because I was -- you
18 certainly can't dig that out of either the SER -- I
19 mean, you have got the words and the FSAR. I mean,
20 you just -- that is a good point to be made is that
21 you actually think that is an improvement over what
22 they had before. You can't discern that from our
23 viewpoint.
24 MR. RAHN: I believe --
25 MEMBER BROWN: And there is no picture

1 showing that.

2 MR. RAHN: -- it was alluded to in a

3 previous ACRS presentation by the Electrical

4 Department. I think they had a brief discussion on

5 that, although they didn't talk about how it was

6 partitioned.

7 Our staff evaluated the combination of

8 failures of individual power supplies as well as the

9 master/slave pairs of the distributed controls and so

10 forth. So we looked at that area in particular. I

11 think the electrical guys identified the fact that

12 they had this new system for power supply

13 distribution.

14 We also recognized that the analog input

15 signal levels were changed 4 to 20 essentially,

16 replaced 10 to 50, so that standard is different.

17 Next slide, please. In the RPS area, we

18 are -- we have a confirmatory item to ensure that the

19 hardware enforced one-way communication is actually

20 working. We don't see a reason why it wouldn't work,

21 but we would like it demonstrated as part of a pre-op

22 test.

23 And so that's an area where they have a

24 serial to Ethernet connection and in the serial

25 portion, it's a four-wire system, they have a transmit

1 and receive and they have actually lifted the ability
2 -- the wires completely from the receive end. So the
3 Eagle 21 really will only transit out. There is no
4 way it's getting a signal back from the process
5 computer system.
6 In addition, there were some little things
7 identified during the tests regarding some of the
8 input signals being slightly different during the
9 factory-acceptance test and they are attributing that
10 to some of the actual configuration of the landing of
11 the leads on the cards, which made a potentially minor
12 input error, which will be -- that actually has been
13 corrected and tested, but we are going -- we would
14 like to see it validated by tests as well, because it
15 affects the demonstration of the T av.
16 Next slide, please. As far as what we
17 were concerned, after having evaluated all the deltas
18 between Unit 1 and Unit 2, we are satisfied that the
19 RPS system meets the current -- the applicable
20 criteria for that system. So we don't have any real
21 open issues, except for the confirmatory items on RPS.
22 CHAIRMAN RAY: And you believe that all of
23 the things that you rely upon in making that finding
24 are accessible in the record for future reference if
25 a change should be found?

1 MR. RAHN: If we felt it was not
2 adequately documented, we documented it ourselves by
3 placing a reference to it in our Safety Evaluation
4 Report.
5 CHAIRMAN RAY: Yes. Okay. So then the
6 question becomes the FSAR plus the SER, which includes
7 what you just said --
8 MR. RAHN: Yes.
9 CHAIRMAN RAY: -- constitutes the basis on
10 which one would look at future changes?
11 MR. RAHN: That's correct.
12 MEMBER BROWN: I would -- I understand
13 that. It's just that the ability to dig that out 10
14 years from now --
15 MR. RAHN: Yes.
16 MEMBER BROWN: -- is -- to me, would be
17 difficult when you would have people coming -- you
18 know, myself and a number of others were not on the
19 Committee.
20 MR. RAHN: Yes.
21 MEMBER BROWN: Maybe they weren't on the
22 Committee 16 years ago or 15 years ago and then for,
23 you know, other little evolutions when this came up
24 and I'm not even sure I would have remembered. I know
25 I wouldn't have remembered all that detail for 10

1 years. And I'm not saying everything has to be
2 reflected in the FSAR, but there are certain things
3 such as the isolation of data communications.
4 MR. RAHN: Yes.
5 MEMBER BROWN: The idea of lifting the
6 wire in the thing, so that you literally can't have
7 it.
8 MR. RAHN: Yes.
9 MEMBER BROWN: You have -- you try to dig
10 that out somewhere.
11 MR. RAHN: Yes.
12 MEMBER BROWN: That's very difficult to do
13 when you look for it.
14 MR. RAHN: That particular one, we
15 actually reviewed a piece of their modification
16 package, so -- for putting it into Unit 1, so they
17 actually have a design package. We made a reference.
18 We had that documented and made a reference to it and
19 put it in our SER.
20 MEMBER BROWN: And that's good, except you
21 have got to follow the string and touch a number of
22 different places to find out what does that really
23 mean.
24 MR. RAHN: Yes.
25 MEMBER BROWN: You know, what is wrapped

1 up in that. So anyway, I was just trying to emphasize
2 the point.
3 MR. RAHN: Yes. I think there are places
4 in the -- in our SER where we identified functionally
5 what they did. I think it actually describes the
6 hardware change that I was mentioning.
7 CHAIRMAN RAY: Well, there is a generic
8 issue here we will pick up later.
9 MR. RAHN: Yes, yes.
10 CHAIRMAN RAY: We need to -- I think we
11 can adequately --
12 MR. RAHN: In the area of ESF Actuation
13 System, there were several changes that were
14 identified to us. One of the most critical things for
15 us was the upgrade to the Foxboro Spec 200 intellect
16 system for several of the analog controls.
17 In addition, there were some power supply
18 upgrades put into the solid-state protection cabinets,
19 as well as some facilities for improving surveillance
20 testing. And there were a number of minor changes
21 that were made throughout the design that were -- we
22 have determined to be functionally the same as what
23 Unit 1 has.
24 So but of the areas that we looked at, we
25 determined that the changes that were made were able

1 to be evaluated in terms of the current licensing
2 basis for Watts Bar Unit 1.
3 MEMBER BROWN: The question I did not ask,
4 because I didn't -- I forgot about it. I didn't
5 forget about it, but it didn't occur to me. On the
6 solid-state protection system, that is different from
7 the old one in terms of the details?
8 MR. RAHN: Cards, yes.
9 MEMBER BROWN: The cards. And I'm
10 presuming that the old one was an early version
11 integrated circuit and/or discrete transistor logic
12 inputs, whereas a lot of the more current logic gates
13 are part of the large scale integrated circuits.
14 And I guess my question is there is four
15 channels feeding four channels to go to both.
16 MR. RAHN: Right.
17 MEMBER BROWN: And it looks like there is
18 contact closures on the inputs, at least based on the
19 one diagram in there, which keeps isolation from that
20 standpoint. But those larger integrated circuits,
21 larger scale integrated circuits --
22 MR. RAHN: Yes.
23 MEMBER BROWN: -- you can combine multiple
24 channels on one larger scale integrated circuit, which
25 gives you some vulnerabilities in terms of the

1 compromise, you know, the ability to have a failure
2 compromise the whole chip.
3 Now, did they use separate chips for each
4 one?
5 MR. RAHN: Okay.
6 MEMBER BROWN: Accordingly for total
7 independence or not?
8 MR. RAHN: The particular individual that
9 did have review, isn't here.
10 MEMBER BROWN: Oh.
11 MR. RAHN: But --
12 MR. MILANO: We can get TVA to --
13 MR. RAHN: Yes.
14 MR. MILANO: -- provide that.
15 MEMBER BROWN: That's fine.
16 MR. HILMES: Steve Hilmes, TVA. Actually,
17 in the case of SSPS, it is the same. We -- they
18 actually went back and remanufactured the old chips.
19 Yes.
20 MEMBER BROWN: Well, that's painful.
21 MR. HILMES: Yes, it was. Yes, we --
22 MEMBER BROWN: I hope you bought a
23 thousand of them. Okay. You answered my question.
24 If you just redid it with the old stuff, then that--
25 MR. HILMES: Yes.

1 MEMBER BROWN: -- answers my question
2 satisfactorily. Thank you.
3 MR. HILMES: Yes.
4 MR. RAHN: Okay. The next slide, please.
5 We did see that there were some -- the upgrade to the
6 aux feedwater controls, which we think actually is an
7 enhancement that would improve the reliability of the
8 aux feedwater controls, so that was actually a plus,
9 in our minds.
10 The design for implementing the equipment
11 does meet our regulatory requirements. There was an
12 evaluation performed on their failure modes and
13 effects analysis for this upgrade, and it remains,
14 basically, function-for-function identical to the Unit
15 1 FMEA.
16 And in addition, we evaluated things like
17 IE Bulletins that have had impact on I&C design. And,
18 of course, one of them that is really critical was
19 what happens if you have an automatic initiation and
20 that signal clears? We want to make sure that the
21 system goes into a completion or protective-action
22 type mode and then doesn't automatically reset. It
23 has to be manually reset. And those features were
24 also incorporated into the design of the upgrade that
25 was done on Unit 2.

1 So overall, we found that the conclusions
2 we made regarding the safety of Watts Bar Unit 1, the
3 ESF Actuation System apply to the Unit 2 design.
4 Next slide, please. Another area we
5 looked at was to ensure that as so far as to limiting
6 safety system sightings that were selected for
7 operation of Watts Bar Unit 2, were done in accordance
8 with our current criteria.
9 Back in 2006 and actually the years
10 leading up to 2006, there was a lot of discussion
11 regarding maintaining a setpoint to a very small
12 amount of deviation. And so we issued a Regulatory
13 Issue Summary 2006-17, which clarified what our
14 concerns were regarding what happens when a technician
15 goes and finds an instrument out of tolerance during
16 a surveillance.
17 And so we have -- our staff has improved
18 its criteria, risk guidance, for developing as-found
19 and as-left instrument values and we found that the
20 TVA's setpoint methodology matches our concerns. And
21 so we found that to be acceptable.
22 MEMBER BROWN: Doesn't that mean that if
23 it's out of spec, to recalibrate it?
24 MR. RAHN: Yes. What it, essentially,
25 does is there is actually a variety of ways this goes

1 about. In Eagle 21 space, it's a little different
2 from the analog space. But what happens is
3 Westinghouse has identified an as-found tolerance
4 value that is equal to their calibration accuracy
5 value. And if it ever exceeds that value, it has to
6 be reset to within that tolerance.
7 But beyond that, the staff has identified
8 criteria for what constitutes acceptable draft or
9 acceptable performance, such that if it exceeds that
10 value, it goes into an action limit, which triggers an
11 engineering evaluation or some kind of a corrective
12 action to take a look at.
13 This is prior to reaching the allowable
14 value for the channel. And we found that there are
15 steps for what happens when it is beyond that value
16 matches what the staff's criteria is for triggering a
17 corrective action program to take place.
18 That corrective action program might
19 entail determining whether there is something wrong
20 with the channel or determining whether the tolerance
21 limit was adequately determined. So it may require
22 another engineering evaluation to be performed.
23 MEMBER BROWN: HealthTech is that
24 document?
25 MR. RAHN: Well, there are several.

1 MEMBER BROWN: Several pages --

2 MR. RAHN: No, no, no, no, no. It's not

3 that thick.

4 MEMBER BROWN: It shouldn't be more than--

5 MR. RAHN: Yes.

6 MEMBER BROWN: 5 or 10, 15 pages.

7 MR. RAHN: Well, it's about 40 of 45

8 pages.

9 MEMBER BROWN: 40 pages?

10 MR. RAHN: Yes.

11 MEMBER BROWN: Okay. Could you get a copy

12 of that?

13 MR. SHUKLA: Sure.

14 MR. RAHN: Next slide, please. One of the

15 biggest areas we saw for upgrades were in the area of

16 display instrumentation and some of that display

17 instrumentation was safety-related display

18 instrumentation. And so we did have several key-in

19 areas when we performed the evaluations.

20 Most notably, we first wanted to make sure

21 that TVA's previous commitments with respect to

22 adhering to Reg Guide 1.97 post-accident monitoring on

23 Unit 1 were being followed on Unit 2.

24 In addition, a newer key area was the use

25 of a digital platform for performing computations

1 associated with post-accident monitoring. Norbert
2 will get into that in more detail in a few minutes.
3 In addition, the use of the containment hi-range
4 radiation monitors, as Steve talked about earlier, was
5 a newer design and so we focused on the qualification
6 aspects of that set of instrumentation.
7 Another area that we found fairly
8 significant change was using a distributed process
9 computer system, rather than a central computer
10 system, because that particular system is used to
11 drive, see those abbreviations there, the bypass to
12 inoperable status indication panel, the safety
13 parameter display system, information that is in the
14 technical support center, as we talked about earlier,
15 and nuclear data links, which are used to feed data
16 here to the NRC Headquarters Operations Center, as
17 well as other places within TVA.
18 In addition, we evaluated compliance with
19 what would happen if we lost power supply on some of
20 the non-safety-related systems that are used as
21 controls to make sure that it didn't trigger an event
22 that would be outside the accident analyses. And I
23 think Steve talked a little bit about this
24 segmentation analysis.
25 Could I have the next slide, please? I

1 think we are talking about -- in particular, what
2 triggered our minds, and what triggered your mind
3 also, Member Brown, is what happens when we have
4 digital-to-digital communications?
5 And so our biggest concern was to zero in
6 on how did they go about accomplishing that? And what
7 do we have to give us our assurance that we are going
8 to be enforcing one-way communication?
9 So we narrowed down what digital
10 communications takes place all the way down to the
11 post-accident monitoring panel talking to the process
12 computer and the Eagle 21 system talking to the
13 process computer.
14 We looked at all the other digital systems
15 that were there and we tried to discern whether there
16 is any information that is being communicated of a
17 safety-to-nonsafety criteria that would entail a more
18 detailed evaluation or a nonsafety-to-safety.
19 And we did learn that the Eagle 21 to
20 Foxboro system require -- is essentially a combination
21 of the analog and contact closure signals and
22 containment hi-range radiation monitoring system also
23 provides analog signals only. So we are -- there were
24 no surprises to be more scrutinized in those two
25 areas.

1 Okay. You can go on the next slide.

2 MR. CARTE: Okay. Regarding the Common Q

3 Post-Accident Monitoring System, it's based on the

4 Westinghouse Common Q Topical Report with some

5 changes. One of the conditions of that safety

6 evaluation, of that topical report was that they

7 follow their software program manual, so we evaluated

8 changes from the original topical report, which

9 included some hardware and software changes.

10 We explicitly asked for an identification

11 and explanation or justification for all changes and

12 we looked at -- to assure that they were following the

13 software program manual, there were changes there and

14 we asked for a description and justification for all

15 those changes.

16 We spent a lot of time and a significant

17 portion of that SE is on three post-accident

18 monitoring variables which are reactor vessel level

19 indication, core exit temperature and subcooling

20 margin monitor. The reason is that two of those

21 variables are Type A Category 1 variables.

22 And what that means is, in essence, if you

23 could go to the next slide, that these, those two

24 variables, provide the primary information to the

25 operators for them to take pre-planned manual actions

1 to accomplish Chapter 15 design basis events.

2 In other words, the operator in this case

3 is the actuation system. And the display is that

4 vital information. And that's why this system

5 required a significant amount of effort in itself. We

6 used the criteria of Reg Guide 1.97 Revision II, which

7 is their commitment, and also IEEE 603.

8 And the reason 603 applies to post-

9 accident monitoring variables is part of the

10 difference between 603 and 279. 279 is basically

11 written -- attributably, 279 is basically written

12 against automatic actuation systems.

13 The way 603 is written, it starts off with

14 what are your plant modes? What are your design basis

15 events? What indications do you have that those

16 design basis events are occurring? And then it has a

17 design basis evaluation. Do you have time to take

18 manual action? And if you do, you can design displays

19 and controls to adjust those safety functions.

20 So it is that criteria specifically that

21 is applicable to Type A variables. If there were no

22 Type A variables, we would not have looked at 603. We

23 would not have used 603 to evaluate the Common Q Post-

24 Accident Monitoring System, which is, in fact, the

25 criteria which we got into a little bit with the

1 radiation monitors.

2 The radiation monitors do not prompt

3 operator action to address design basis events. So we

4 did not use 603 for the radiation monitors.

5 Basically, we found the system acceptable with a few

6 open items.

7 And let me go on to the next open item.

8 And part of that open item list are things like

9 demonstrate conform -- well, these are a little

10 summarized.

11 Demonstrate conformance with all clauses

12 of 603. So what they haven't explained yet is what

13 specific design basis events are these type area --

14 these Type A variable used for and what manual

15 controls do they use to initiate those events?

16 So from that information, we can look at

17 do they actually have time to do that? Can they

18 operate the controls from where they have the

19 displays? Those are the specific requirements in 603

20 that I cannot say that they conform with, unless I

21 know what the events are. So they still have to

22 provide us an analysis of those events.

23 Demonstrate conformance with Reg Guide

24 1.152, specifically the aspect in there that has not

25 been addressed is the secured development and

1 operational environment. So we have transitioned in
2 this project from Rev. 2, which was originally issued
3 to Rev. 3, which is now on -- available on the
4 website. And they have not responded and I'm not
5 quite sure whether they are going to address Rev. 2
6 and try and address cyber security or whether they are
7 going to just address Rev. 3 and secure development
8 and operational environment.
9 MEMBER BROWN: That's an important
10 distinction between -- from a number of the
11 discussions we have had, both on, I guess, ISG-6 and
12 then 5.71, then ISG-6, whichever one came first.
13 MR. CARTE: Right, right.
14 MEMBER BROWN: Okay. And then the most
15 recent review of 1.152. I mean, there is a big
16 difference there.
17 MR. CARTE: Yes.
18 MEMBER BROWN: So are we going to be able
19 to address that in this next meeting as to what is
20 going on whenever we start talking about the cyber
21 aspects of this thing?
22 MR. CARTE: Well --
23 MEMBER BROWN: I'm not asking you to go
24 into detail. I recognize the security --
25 MR. CARTE: Right.

1 MEMBER BROWN: -- nature of it.

2 MR. CARTE: Basically, my understanding of
3 the approach is that TVA will try and address Reg
4 Guide 1.152 Rev. 3 with the I&C staff. And so we will
5 look at just the secured development and operational
6 environment and any malicious intent will be addressed
7 under cyber security.

8 MEMBER BROWN: Okay. I'm not saying I
9 agree or disagree with that. I hope you understand my
10 comment.

11 MR. CARTE: Yes. And the other clauses
12 that come into effect, if I could lump them together,
13 is a concept which some topical report applicants get
14 a little confused or a little misunderstanding. There
15 is no backfit protection on a topical report. So a
16 topical report is evaluated for conformance to
17 applicable guidance -- at regulations and guidance.

18 However, as time evolves, regulations and
19 guidance change. An application that comes in must
20 meet current applicable regulations and guidance. So
21 there is some times a delta between what the topical
22 report was evaluated against and what the licensee
23 must address.

24 And so part of this misunderstanding are
25 the delay in the response has been the concept that

1 well, this was approved and, therefore, we don't need
2 to evaluate again the current guidance and we are
3 forcing them to docket information with an evaluation
4 against the current guidance.
5 MEMBER BROWN: Okay. So you are saying a
6 delay from Watts Bar to you all? That's the delay you
7 are talking about?
8 MR. CARTE: Yes.
9 MEMBER BROWN: So that's where you are
10 right now.
11 MR. CARTE: Because we look at current
12 applications with respect to current regulations and
13 guidance. And that's a problem with respect to
14 systems that have changed.
15 MEMBER BROWN: There was another reg guide
16 that was revised relative to manual actions that
17 talked about time available and time required to take
18 actions, which was a little bit more detailed. I
19 mean, it was a revision to the -- I forget. It was
20 either 1.6 --
21 MR. CARTE: 1.62 probably.
22 MEMBER BROWN: Yes, you're right, it was
23 1.62. And I didn't see that listed here relative to
24 manual actions. Is there a reason for -- because that
25 -- I mean, that is literally a reg guide that refers

1 to the ability to take manual actions. And it is not
2 included here. And that had more descriptive -- it
3 wasn't prescriptive, but I mean it had more
4 descriptive saying, you know, if the time got less,
5 then you had to have a better analysis and a few
6 things like that.
7 MR. CARTE: Right. Well, one of the
8 design basis clauses of 603 is Clause 4.5, which
9 includes documentation of the information or the time
10 available for the operator to take actions. So they
11 have not given me that information yet.
12 MEMBER BROWN: Well, 1.62 addressed the
13 old 30 minute rule and said -- you know, the Committee
14 had made a comment that, gee, that was kind of -- 30
15 minutes regardless of what the nature was and you all
16 proposed something and it now became more variable.
17 You didn't have to meet 30 minutes necessarily, if you
18 had --
19 CHAIRMAN RAY: Charlie, we --
20 MEMBER BROWN: My point -- let me -- I'll
21 -- 1.62 is not in here. That's my question. And I'll
22 just leave it at that.
23 MR. CARTE: Okay.
24 MEMBER BROWN: Why it's not -- you know,
25 why it's not part of this.

1 MR. RAHN: Well, I think part of the
2 answer to that, Charlie, is that when we evaluated
3 that portion of the design, we were using the criteria
4 for Watts Bar Unit 1, because we did not find a large
5 delta in the design, with the exception of this post-
6 accident issue, so perhaps that's something that we
7 could look at one more time, just to make sure we have
8 got it covered.
9 MR. CARTE: Yes. And I need to look --
10 MEMBER BROWN: Based on this comment about
11 using more current reg guides at the time of the
12 whatever.
13 MR. CARTE: Right. I have to go back and
14 look at 1.62, but if I recall the evolution of that,
15 when we had Reg Guide 1 -- sorry. IEEE-279 is a
16 regulatory requirement, that was a requirement for
17 automatic protective systems. There was also a
18 requirement for a manual initiation of those same
19 systems. And whether we talk at the division level or
20 the system level, that's the difference between 279
21 and 603.
22 But 1.62 was originally written against
23 that manual initiation. What we are talking about a
24 little differently here is that these Type A variables
25 have no automatic actuation system associated. So

1 it's not the manual initiation clause that was
2 originally intended in 1.62, but rather the manual
3 actions that were coming in under 603 that were not
4 originally part of 279.
5 So I have to go back and think about look
6 at how 1.62 was written and if it still only addresses
7 those system level actuations for which there are
8 automatic actuations or if it includes also --
9 MEMBER BROWN: I thought it included the
10 non -- there were no automatic, but I'll let you go
11 confirm that and it can be addressed later.
12 MR. CARTE: Well, I'll look into that. As
13 well as Reg Guide 1.209 was issued after the Common Q
14 Topical Report was issued, so they have to address the
15 criteria in there.
16 I believe when this was -- when the SE was
17 written, so we are talking at the SE, they had not
18 justified or mitigated all deviations from the
19 material in the SPM. They have subsequently docketed
20 additional information, which I have not completed my
21 review of.
22 One thing which they didn't describe was
23 how to perform periodic testing of RVLIS system, so
24 I'm waiting for that information, as well as,
25 obviously, we haven't seen any of the technical

1 specifications. So we have to make sure that those
2 are met.
3 Another criteria which is not on here, but
4 which is interesting is the synergistic effects of
5 high temperature and high humidity.
6 MEMBER BROWN: Yes.
7 MR. CARTE: So if you look at criteria in
8 terms of -- we have sometimes separately stated
9 temperature requirements and separately stated
10 humidity requirements. And so in some senses,
11 depending on how you conform to requirements, you can
12 say you meet the temperature requirement and you meet
13 the humidity requirement, because it's a relative
14 humidity requirement.
15 However, the actual humidity or actual
16 volume of water in the air is different at a high
17 temperature than it is a low temperature with the same
18 relative humidity. So there may be synergistic
19 effects of temperature and humidity which they have to
20 address. They have to demonstrate that there are no
21 synergistic effects because they had not done the high
22 temperature/high humidity test case.
23 MEMBER SIEBER: Pardon me? Go ahead.
24 MR. CARTE: That's it, I think, for
25 commentary.

1 MEMBER SIEBER: Are there topical reports
2 approved by the staff for either of the Common Q or
3 Eagle 21 systems?
4 MR. CARTE: Yes.
5 MEMBER SIEBER: Yes. Are they
6 referenced --
7 MR. CARTE: Yes.
8 MEMBER SIEBER: -- in the application?
9 Okay. So that becomes the basis or does it?
10 MR. CARTE: That's an interesting
11 question. The question is --
12 MEMBER SIEBER: What relevance does it
13 have to the licensing process that you are going
14 through for Watts Bar 2?
15 MR. RAHN: Certainly from its functional
16 standpoint, I think we could conclude it is the basis,
17 but with the hardware upgrades that have been made, it
18 doesn't address those.
19 MEMBER SIEBER: Okay. So is it referenced
20 in your SER?
21 MR. RAHN: Yes. We talked about how we
22 evaluated the changes in the hardware in our SER.
23 MEMBER SIEBER: Okay. So --
24 MR. RAHN: And some of that --
25 MEMBER SIEBER: -- it is a reference?

1 MR. RAHN: Yes, right.

2 MEMBER SIEBER: Okay.

3 MR. CARTE: Which includes a description

4 of every hardware and software change and an

5 evaluation of that and we looked at that.

6 MEMBER SIEBER: Okay. Thanks. Thank you.

7 MR. RAHN: In the area of control systems

8 that are not required for safety, another area of

9 interest for us was in the use of the distributed

10 control systems for non-safety controls. And that's

11 an area where we have a concern on is failures of that

12 control system and what impact it has on the operation

13 of the safety systems as well as the safe

14 accomplishment of safety functions.

15 And what we did find was that the license

16 applicant had actually performed a very detailed

17 segmentation analysis, I call it partitioning

18 analysis, but, essentially, it analyzes the effects of

19 failures of function, which they broke into, as Steve

20 talked about earlier, 15 logical functional areas, as

21 well as what would happen if there is a processor

22 failure within that function or what would happen if

23 there is a power supply failure within that function.

24 And so we -- their segmentation analysis

25 written in almost in the form of a calculation type

1 method, and so we evaluated that as an input for our
2 decision to -- either to determine that it was
3 adequate or not. And we found that their evaluation
4 was effectively detailed enough for us to make a
5 decision that we could conclude that single failures
6 that occur on those systems will not degrade the
7 functional performance of any safety functions within
8 the Chapter 15 analyses.
9 So overall, we have concluded that the key
10 criteria of quality and instrumentation and control
11 and sense and command interactions won't introduce any
12 new unanalyzed failures that have not been currently
13 analyzed, as well as increase or decrease the
14 likelihood of such occurrences.
15 It will decrease. I'm sorry, we did find
16 that the use of fault-tolerant technology actually
17 improved or enhanced the performance.
18 Next slide, please. So, essentially, we
19 are currently looking into detail about the in-core
20 instrumentation system, that's the one major area that
21 we have not completed our review on. However, at this
22 point, we have received sufficient data from the
23 applicant to be able to complete our review. That's
24 an area where our focus is really on the separation
25 and isolation criteria from the in-core

1 instrumentation, which have mineral-insulated cables
2 that go up into the core and they have a safety-
3 related function, which fees the post-accident
4 monitoring for the core exit temperature.
5 And then the non-safety-related function
6 which feeds the in-core detectors which helps do the
7 flux mapping. And so the area of interest for us in
8 this area is the how did they verify that any
9 electrical faults propagated at the -- that performs
10 the separation between the 1E and the non-1E part?
11 How do we ensure that any faults don't propagate into
12 the 1E portion?
13 And so we are nearing our completion of
14 that review and we have asked them to docket a piece
15 of their analysis for that.
16 In addition, we have identified a few
17 field tests, I alluded to a couple of them earlier,
18 that would have to be performed prior to fuel load.
19 And so those issues are going to be identified as
20 things which go on to our regional inspectors table,
21 which we anticipate participating in some of that
22 inspection.
23 The next slide, please. So, essentially,
24 to complete our evaluation, at this point, we are
25 going to work down the remaining open items issues.

1 In terms of numbers, I think we are into the 30 or 40
2 range. I can't remember the numbers any more. I used
3 to follow that a whole lot closer. We are also going
4 to finish our evaluation of the in-core
5 instrumentation system to make sure we are complying
6 with applicable I&C Codes and standards.
7 And then once the tech spec package comes
8 in, we will be looking at that closely in conjunction
9 with the functions that have been identified in the
10 hardware that have been identified to serve those
11 functions to make sure that things like calibration
12 frequency, allowed outage times and some of those
13 criteria have been adequately specified.
14 I just thought of something now. It
15 skipped. Let's go on the next slide. Yes, okay. So
16 overall, what we are anticipating is that we are going
17 to be finishing our evaluation of the in-core
18 instrumentation system by the end of August. And I
19 think we will be ready to submit it to our DORL team,
20 at that point.
21 And then just continue to whittle down all
22 the open items until we finally have either a piece of
23 information that we can put on the docket or something
24 that allows us to make a firm conclusion as to how we
25 determine that it adequately meets the acceptance

1 criteria under our Standard Review Plan.

2 CHAIRMAN RAY: Well, and obviously, we

3 have a question in our mind of how do we become aware

4 of your resolution of this remaining work? And we

5 will have to follow-up.

6 MR. RAHN: There is a -- I could tell you

7 one thing about that. There is pros and cons, you

8 know, regarding this, so one thing is if you have too

9 much detail in the FSAR, then you always run the risk

10 of being determined as a commitment when it is not a

11 commitment, it's a description. And the other thing

12 is that not enough detail, of course, has all these

13 questions that we have all been struggling with.

14 What is the big picture? What are the

15 components? So somehow for highly technical designs

16 like this is, we have to come up with some either

17 rules of thumb or something that will tell us how much

18 design it needs to be adequately described. And we

19 may have to do it on a functional basis.

20 CHAIRMAN RAY: Yes. I alluded earlier to

21 Design Certification, which is a very -- struggles

22 with the same problem of how much detail, how much

23 constraint, particularly in this area, for example,

24 needs to be part of the certified design in order to

25 reach a finding as compared with things that can be

1 deferred later and demonstrated to functionally meet
2 some design objective.
3 But in any event, we are not going to
4 solve that here. I think we have spent enough time to
5 have gotten all that we can from this meeting in all
6 likelihood. We will be following up with you, at
7 least in the area that requires a closed meeting, but
8 I think also with regard to the issues that you have
9 now described that you haven't yet been able to
10 finish.
11 MR. RAHN: Right.
12 CHAIRMAN RAY: In terms of planning future
13 meetings, that is going to be something we will also
14 address off-line. I want to now give an opportunity
15 to the region to present to us whatever information
16 they would like to, rather than go into another
17 technical area.
18 MR. MILANO: But before we do that, to
19 answer your question with regard to your --
20 specifically with the open items that exist within,
21 you know, the instrumentation organization portion of
22 the review, currently we have 110 open or confirmatory
23 items that must be resolved before --
24 CHAIRMAN RAY: Yes, I've got them listed
25 right here.

1 MR. MILANO: Right. You see them in
2 Appendix HH to the SER.
3 CHAIRMAN RAY: Right.
4 MR. MILANO: Each one of the items that is
5 considered to be open, which means that the staff
6 needs that piece of information it needs to make its
7 determination on it, so that we can consider that
8 portion of the SER that we made our reasonable
9 assurance finding on it, those will be addressed in a
10 future supplement.
11 And, you know, it would be like maybe
12 7.54, you will see just that discussion and how we
13 close it. The confirmatory items will be addressed
14 within the appendices itself and will give you a
15 reference to either a TVA submitted a calculation,
16 which confirmed it, or it was reviewed by an inspector
17 before and we will issue the inspection report number
18 and it will be documented in that table, so that we
19 have confirmation that each one of those items,
20 indeed, was addressed.
21 And all of them will be done before we go
22 to licensing.
23 CHAIRMAN RAY: We still need to make a
24 judgment as to whether or not we need more interaction
25 with you, the applicant, on any of the items that you

1 are talking about, since there are so many now. We
2 will just have to see what our future review scope
3 involves.
4 Dennis, you wanted to --
5 MEMBER BLEY: Yes. I have a follow-up for
6 Norbert. I dug up -- I got 1.62 and took a look. I
7 can see various ways to interpret it. It's manual
8 actions, but otherwise automatically initiated or
9 manual actions as a method diverse from automatic.
10 But if neither one of those apply, what guidance does
11 apply?
12 MR. CARTE: Okay. Yes, I wanted to chime
13 in. There are -- when you think of manual actions,
14 there are sort of three fuzzy sets of requirements
15 that come up for manual actions. One is if you start
16 with 279, you have to have system level actuations and
17 then you had a clause that required manual actuations
18 at the system level for that -- for those system level
19 -- for those automatic actuations.
20 279 came up and said those things need to
21 be independent, not using the same equipment. When
22 603 was issued, it incorporated that requirement for
23 minimum common equipment into the 603. So that's one
24 set of actions. Now, there is -- you have your SECY-
25 93087 Item 2Q or something that came up with the

1 diversity and defense in depth policy and position.
2 So if you had a common-cause failure, then
3 you needed the diverse actuation system. And
4 sometimes you can credit manual actions for those
5 diverse actions.
6 So you have a set of manual actions that
7 are diverse to your automatic actions, so that's
8 another set of requirements.
9 And the third set, which is what I implied
10 by Clause 4.5 of 603, is those safety actions which
11 are credited in Chapter 15, which the operator
12 performs manually, for which there is no automatic
13 system.
14 So when you read that clause, I interpret
15 it to address the first two that I mentioned. The --
16 MEMBER BLEY: So we have no reg guide for
17 that third one, which is just straight manual actions
18 and you refer back to IEEE then, right?
19 MR. CARTE: Well, there is the -- IEEE has
20 the requirement that the design basis include the
21 documentation that they have a sufficient time, but
22 that's more of a human factor or not I&C Branch
23 evaluation, whether they actually have time to do
24 these things.
25 MEMBER BLEY: Right.

1 MR. CARTE: We can say that you can
2 operate the controls from where you can see the
3 displays, but we can't really say do you have enough
4 time? And that's --
5 MEMBER SIEBER: With all the other things
6 you have to do.
7 MR. CARTE: Right. It's more of an
8 operator -- I don't know the branch that does that,
9 but we wouldn't really --
10 MR. RAHN: It's actually the Human Factors
11 Branch.
12 MR. CARTE: Human Factors that is, it's
13 not us. But they haven't given us that information
14 yet.
15 MEMBER BROWN: Well, their --
16 MEMBER BLEY: Well, I guess, what I'm
17 hanging on is in this review for Watts Bar, are the
18 involved? Are they doing a separate review?
19 MEMBER SIEBER: I would think so.
20 MEMBER BLEY: If not, how come, you know?
21 MR. MILANO: No, they are. They are. And
22 as a matter of fact, it is not a -- again, it's not an
23 across the Board review. It is only for those things
24 that were not previously reviewed when Units 1 and 2
25 were being licensed.

1 MEMBER BLEY: That decision would have
2 been previously reviewed, I assume.
3 MR. MILANO: So if it was previously
4 reviewed, no, they are not. But there are some
5 instances and you will hear it next time when we talk
6 about accident transient analysis where in one of the
7 transients, there is -- there was a time period of --
8 that was close to the 10 minute limit and, indeed, our
9 Human Factors organization looked and supported the
10 Reactor Systems Branch to say that yes, indeed, that
11 it appears likely that the action can take place at
12 that 10 minute and 30 second time period.
13 So, yes.
14 MEMBER BLEY: And that will be next time
15 though.
16 MR. MILANO: It will be next time.
17 MEMBER BLEY: Yes.
18 MR. MILANO: That's correct.
19 MEMBER BROWN: I would make one
20 amplification on page 4. This was Rev. 1. So display
21 instrumentation provided for manually controlled
22 actions for which no automatic control is provided and
23 that are required for safety systems to accomplish
24 their safety functions, which sounds to me like it
25 talks about your area of which they don't -- and it

1 just says you -- it goes on and says they have got to
2 be done in accordance with 603 and they can't be
3 ambiguous.
4 In other words, you have got to have
5 monitoring -- you have got to display information for
6 those functions where there are no automatic actions,
7 but for which manual actions are used for safety
8 systems.
9 MEMBER BLEY: Yes, accomplishment of
10 safety.
11 MEMBER BROWN: So safety --
12 MEMBER BLEY: That's interesting because
13 the introduction has the other statement that it only
14 applies to these other things.
15 MEMBER BROWN: Yes, well, this is -- I
16 knew there was something --
17 MEMBER BLEY: So there is guidance.
18 MEMBER BROWN: I remembered something
19 else, that's why I went and dug it up.
20 MEMBER BLEY: We will look at it.
21 MEMBER BROWN: It's on page 4 of Rev. 1
22 and it's the next to the last paragraph.
23 MEMBER BLEY: I see it. I'm looking at it
24 now.
25 MEMBER BROWN: Yes. So that's what I was

1 trying to recall when I was talking to you earlier.
2 CHAIRMAN RAY: What is the bottom line of
3 that?
4 MEMBER BROWN: The bottom line was that
5 hit -- the comment about they didn't have anything for
6 just where manual actions were being used to
7 accomplish a safety function where no automatic -- not
8 just having here I have got an automatic and I've got
9 to be able to manually do it.
10 CHAIRMAN RAY: You say they don't have
11 anything. You meant they didn't have any guidance.
12 But you are referring to something that does apply.
13 MEMBER BROWN: It says that there is
14 guidance for that. And it's in 1.62.
15 CHAIRMAN RAY: All right. Fine. That's
16 all.
17 MEMBER BROWN: Thank you. I'm not very
18 clear most of the time.
19 CHAIRMAN RAY: All right. To be
20 continued, I guess, would be the simplest way to say
21 this. Anything more though with that before we hear
22 from the region?
23 MR. MILANO: No, sir. That's it. That's
24 it for the Chapter 7.
25 CHAIRMAN RAY: I understand.

1 MR. MILANO: We will forego, I believe,
2 the Chapter 4 material until next time.
3 CHAIRMAN RAY: Yes. I think that that's
4 the most sensible thing to do. Like I say, I want to
5 give the region a chance to report to us and have any
6 discussion that is necessary then. And then depending
7 on whether there is any time remaining, we may ask to
8 hear from the applicant again on project status, but
9 we will see --
10 MR. MILANO: Okay.
11 CHAIRMAN RAY: -- what time allows then.
12 MR. MILANO: Okay.
13 CHAIRMAN RAY: Okay.
14 MR. MILANO: In that case, we will -- Mr.
15 Norbert or Mr. Carte and Mr. Rahn will leave and Tomy
16 Nazario, the Senior Resident Inspector will do the
17 construction inspection.
18 CHAIRMAN RAY: I appreciate people being
19 prepared to talk about the other material, but this
20 was just compelling that we were not going to --
21 MEMBER SIEBER: I think the staff --
22 CHAIRMAN RAY: -- make good progress here
23 if we didn't spend enough time on I&C to really have
24 a dialogue. Charlie, one other?
25 MEMBER BROWN: Yes. One. I made the

1 comment about too much detail and not enough detail in
2 the FSAR. And they made the comment about we have to
3 think about it in terms of functional blocked items
4 and that's exactly similar to what we exercised in
5 some of the new applicant DCDs and that's what -- all
6 I was referring to that we ought to have for defining
7 some of these systems in the FSAR.
8 CHAIRMAN RAY: Yes.
9 MEMBER BROWN: Nothing more detailed. Not
10 detailed wiring diagrams, but functional block
11 diagrams.
12 CHAIRMAN RAY: I don't know how we are
13 going to address ourselves to that, other than just
14 the comments that you made, but it seems to me like it
15 is something we need to talk about later.
16 MEMBER BROWN: Yes.
17 CHAIRMAN RAY: With that having been said,
18 let's move on to the regional.
19 MR. MILANO: Okay. We're going to be
20 starting on page 33 of our -- excuse me, page 32 of
21 our slides.
22 CHAIRMAN RAY: All right.
23 MR. NAZARIO: All right. Good morning.
24 My name is Tomy Nazario. I'm the Senior Resident over
25 at Watts Bar Unit 2. I've met some of you before.

1 CHAIRMAN RAY: Yes.

2 MR. NAZARIO: James Baptist was actually
3 supposed to give this presentation. However, there
4 has been last minute changes.

5 CHAIRMAN RAY: That happens.

6 MR. NAZARIO: We just want to give you an
7 overall status in terms of the inspection program and
8 where we are at. Earlier this year, we had completed
9 our 2010 End of Cycle review during which we presented
10 to the public the fact that 14 violations were issued.
11 Actually, it was 13 non-cited and one Notice of
12 Violation and that issue is the one relating to the
13 Heinemann breaker.

14 We also identified a potential substantive
15 cross-cutting issue due to four findings within the
16 same cross-cutting area and this was in the area of --
17 if you look at the guidance, it's Hotel 4 Bravo and,
18 basically, what it speaks to is failure to communicate
19 expectations regarding procedural compliance.

20 So it is something that we are going to
21 continue to look at and monitor as the year progresses
22 and then we will reevaluate during the mid-cycle
23 assessment, which is coming up here shortly.

24 CHAIRMAN RAY: Does this involve
25 contractor personnel or just the applicant?

1 MR. NAZARIO: The applicant. Well,
2 primarily contractor personnel, yes.
3 CHAIRMAN RAY: Yes. Okay.
4 MR. NAZARIO: And then as far as this year
5 goes, to date, we have issued six violations. In
6 terms of regional inspection effort, we have expended,
7 approximately, 14,700 staff hours on the project and
8 this was in 2010. This was actually an increase from
9 8,800 in 2009. And this has been due in large part to
10 the increase in construction activities.
11 Early on in the project, you know, the
12 applicant and the contractors performed walkdowns
13 trying to get a grasp of the project. They went into
14 -- or phased into engineering work and then now they
15 are primarily in the construction phase.
16 We are also utilizing two temporary
17 resident inspectors. We have a total of four
18 residents at the site currently. And during -- last
19 year, we actually had 34 regional inspectors come
20 through the site, so there has been a lot of regional
21 support in terms of inspection effort.
22 We also filled recently a position for a
23 pre-operational testing team leader. And this is just
24 trying to get prepared for a lot of the upcoming pre-
25 operational testing and startup testing. And then we

1 added another senior project inspector down at the
2 region in Atlanta.
3 We had a public meeting on June 20th with
4 TVA and this was to discuss their updated schedule,
5 during which they presented a revised fuel load date
6 and that's -- and they will touch on that during their
7 presentation.
8 Right now, they are looking at some time
9 between July and September 2012 for a fuel load date.
10 They also touched on just overall status and that is
11 covered in their slides.
12 The next slide.
13 MR. MILANO: Before -- I would like to
14 just make mention, the numbers of people that Tomy has
15 been talking about, those are only on the Unit 2 side.
16 That there are two separate resident inspectors --
17 MR. NAZARIO: Yes.
18 MR. MILANO: -- for Unit 1.
19 CHAIRMAN RAY: Understood.
20 MR. MILANO: Yes.
21 MR. NAZARIO: Appreciate the clarification
22 there, Pat. Again, regarding inspection activities,
23 which actually we were issuing quarterly inspection
24 reports. We have now moved to six week, six to seven
25 week inspection reports or inspection periods. And

1 again, this is just a reflection of the increase in
2 construction activities at the site. Reports were,
3 again, fairly large, so we want to maintain and be
4 more efficient in the issuance of these reports.
5 Also, one of the things we looked at and
6 you had a, the last time you were at the site, first
7 hand look is the interface between Units 1 and 2. As
8 Pat mentioned, there is a Unit 1 resident office and
9 we have a biweekly, what we call, Unit 1/Unit 2
10 interface meeting. So, you know, the primary concern
11 there is insuring that Unit 1, which is the operating
12 side of the house, is not impacted by construction
13 activities.
14 We also performed a problem identification
15 resolution inspection earlier this year. We conducted
16 one last year. So it's just ongoing and then we have
17 a resident effort which looks at the Corrective Action
18 Program continuously.
19 We closed eight CAPs and SPs. These are
20 Corrective Action Programs and Special Programs. And
21 the sub-issues mentioned there are the ones associated
22 with the electrical sub-issues.
23 We also closed 94 of, approximately, 500
24 open items. Early on in the project, we developed
25 what we call inspection planning and scheduling

1 database and in there we have exactly 512 items that
2 we are tracking. And these are items that have to be
3 inspected and closed out prior to fuel load.
4 So in terms of progress, we are, you know,
5 right now, as I mentioned earlier, at 94. That is
6 right now our primary challenge is closing out the
7 remainder of these items and in large part, it's due
8 to or correlates to the construction activities that
9 take place at the site and also the completeness and
10 quality of closure packages that are provided to us
11 for our review and inspection.
12 Next slide, please. We have, actually
13 this week, a commercial grade dedication inspection
14 ongoing at the site, so we will be taking a look at
15 the overall program. We have looked at portions of
16 commercial grade dedication in the past, as discussed
17 in some of our previous inspection reports.
18 Then as I mentioned before, as part of our
19 overall inspection program, we will be looking at the
20 pre-operational testing and we will be performing
21 numerous inspections in those areas. We conducted
22 earlier in June training for the NRC staff, primarily
23 the regional staff, on pre-op testing and we had about
24 40 attendees there. So these are inspectors that are
25 going to be assisting us with a lot of these system

1 turnovers as they come up.

2 And then one thing we are also doing at

3 the region, at the regional level, is we are assessing

4 the scope and the schedule for inspections supporting

5 programs, primarily radiation protection, emergency

6 planning, security and these are programs that are

7 currently covered by the Unit 1 organization. So we

8 will be looking at how those transition into the ROP

9 once that comes up.

10 And then again, you know, just to touch on

11 the resolution of the Heinemann circuit breaker and

12 the seismic qualification violation, we actually had

13 an inspection on-site two weeks ago as a follow-up to

14 the Notice of Violation and the results of which were

15 covered during --

16 CHAIRMAN RAY: Your speaker or your

17 microphone is being impacted there.

18 MR. NAZARIO: Oh, okay. I appreciate

19 that.

20 CHAIRMAN RAY: You're all right. All

21 right.

22 MR. NAZARIO: During our upcoming

23 inspection report, so --

24 MEMBER SIEBER: What was the issue with

25 Heinemann, other than seismic? Those are very small

1 circuit breakers in bakelite cases.

2 MR. NAZARIO: That's correct.

3 MR. STINSON: No shattering?

4 CHAIRMAN RAY: No, go ahead.

5 MR. MILANO: The reason why I'm mentioning

6 this is NRR has been supporting the region with regard

7 to -- the casing for this 120 volt circuit breaker is

8 smaller and fits into the MCC differently than --

9 MEMBER SIEBER: So it vibrates?

10 MR. MILANO: That's correct. And so what

11 we are doing is the issue right now is -- the bottom

12 line issue is TVA believes that they could analyze the

13 seismic response of the breaker and the staff right

14 now is of the opinion that the only way you could do

15 it in the configuration is through testing.

16 MEMBER SIEBER: Okay.

17 MR. NAZARIO: All right?

18 MEMBER SIEBER: Yes, these Heinemann

19 breakers are used every place by everybody, but the

20 mounting is important.

21 MR. NAZARIO: Yes.

22 CHAIRMAN RAY: Correct.

23 MEMBER SIEBER: Okay.

24 MR. NAZARIO: Thanks. Next slide. Again,

25 the inspections are ongoing. The issues that have

1 been identified to date have been of minor
2 significance or lower significance as covered in our
3 inspection reports. The majority have been severity
4 level 4 violations and -- or non-cited violations and
5 then the one Notice of Violation that we just talked
6 about here.
7 So far we have determined that we do have
8 adequate inspection resources. Again, and that's just
9 going to continue to increase as time goes by. And
10 just to highlight the point again, which is the fact
11 that there is going to be a continued increase in
12 terms of ongoing inspection efforts as construction
13 activities increase, pre-operational testing and
14 system turnover increases.
15 So any questions?
16 CHAIRMAN RAY: All right. Yes, thanks.
17 MR. NAZARIO: Okay. Appreciate the
18 opportunity.
19 CHAIRMAN RAY: Well, thank you very much
20 for the report. We certainly are very much interested
21 in how this is executed, but it sounds like it is
22 going well. Thank you.
23 MR. NAZARIO: Thank you.
24 CHAIRMAN RAY: All right. Pat, I think we
25 will invite the applicant to cover the schedule or

1 status material that they were prepared to address.
2 I want to leave time for any public comment that we
3 need to receive and also be done before 12:00.
4 So may I invite the applicant to return?
5 Sorry for asking you to do this out of order, but I
6 think we made the best use of our time. And now, we
7 would be happy to ask you to go ahead and give us the
8 presentation on the construction completion status and
9 outliers.
10 MR. STINSON: Okay. Thank you. I'll try
11 to go through this briefly. I'm Dave Stinson, TVA.
12 I will go just through a quick update. I'll kind of
13 tell you how we got here.
14 As you know, I'm -- this is my fifth month
15 with the project, so I'm a new project manager in
16 place. To give you a feel for our progress with
17 reassessing the schedule, what our turnover schedule
18 actually looks like, how we are validating that, and
19 as I think Tomy said, that we have kind of a window
20 for completion for fuel load at the July, end of
21 September time frame for 2012.
22 Go to the next slide. So in the
23 engineering, we are 85 percent complete. All
24 engineering resources with just a few exceptions are
25 on-site. We are focusing on field support to

1 construction, working on our Corrective Action Program
2 and also our Special Programs completions, CAPs and
3 Special Programs. And then last is the support.
4 Construction. We just finished a Unit 1
5 outage where we did a large amount of work during that
6 time. We have been focusing. We have actually slowed
7 down our overtime rate fairly substantially from about
8 50 percent down to about 10 percent, looking at
9 improving our overall work performance productivity
10 and then that challenging quality caught as much as
11 the overtime rate did.
12 We have improved our direct work
13 productivity from 19 percent up to 25 percent. Today,
14 we are about 64.5 percent complete with construction.
15 We are focused on staffing critical positions,
16 primarily in developing work plans and a work plan
17 closure area. So field engineers and planners are
18 critical.
19 And then getting a workable backlog. Some
20 of our work plans have been challenging to complete in
21 the past because of their size. And so we developed
22 a new process to make those smaller, more workable, so
23 they get through the process much quicker. It aids
24 the field work and the focus and also aids in closure.
25 Next slide. Our Active Refurbishment

1 Program. We are on the end of that program. Over 77
2 percent of safety-related valves have been complete.
3 With pumps 77 percent and our motors required are over
4 90 percent.
5 Startup testing, we turned over 28 systems
6 to date. Turned over three in May, four were
7 completed in June. We integrated safeguards testing,
8 something that has been a topic, I think, for a while.
9 We intend to perform that on-line with Unit 1 on-line
10 after hot functional testing.
11 And during the outage when the key for us
12 was completing work that -- so that we could do that
13 on-line, rather than an off-line. So we completed an
14 informational flow balance during the outage and got
15 all of our settings, so that when we came on-line, we
16 could do that very quickly.
17 We look to do that in the fall once the
18 river temperatures are down and puts us in position to
19 do that on-line.
20 Just a few slides, so you see kind of how
21 the completion is there. This is the control room
22 probably a couple years ago.
23 And the next slide. And then the control
24 room as it looks now. So substantially completed all
25 the work there and we are now in the process -- over

1 the next couple of months, we will actually take the
2 curtains down and open that up to the Unit 1 control
3 room. We are that far along.
4 Next slide. Areas that we have turned
5 over, this is our CCW pump room area to just give you
6 a feel for the level of completeness that we will have
7 at the point when we finish. We have a major coatings
8 program.
9 Next slide.
10 CHAIRMAN RAY: Wait a minute. When you
11 remove the barrier and have your single control room
12 with two sides on it, will there be any -- at what
13 point would the shift crews be under single
14 management? I assume that's still off in the future
15 in the two sites.
16 MR. STINSON: Yes, I might actually refer
17 that to maybe Pete on that. We are going to have an
18 SRO, the Unit 2 SRO on duty.
19 CHAIRMAN RAY: Yes.
20 MR. STINSON: At that time. And Pete
21 Olson, our startup manager.
22 MR. OLSON: Yes, Pete Olson, TVA, Startup
23 Manager. We will get staff and control room this fall
24 with an SRO for Unit 1, that's what our target is with
25 the curtain coming down.

1 Our current activities are coordinated
2 through the Unit 1 shift manager now that do impact
3 Unit 1 and are working through that process as this
4 goes through Unit 1 for work orders that impact
5 equipment on Unit 1 also currently.
6 We will continue to staff Unit 2 control
7 room with Unit 2 assigned people. Many of the
8 operators assigned to Unit 1 are part of the Unit 1
9 operating crew. Our auxiliary operators are supplied
10 to this by the Unit 1 staff. And they rotate with us
11 on the Unit 2 side.
12 CHAIRMAN RAY: But the responsibility for
13 the management of the actions associated with startup
14 testing of Unit 2 will be separate from Unit 1 or not?
15 MR. OLSON: Yes, that will be separate
16 from Unit 1 at that -- until down the road quite a
17 bit, yes. Hot functional is really what our target is
18 when you look at the big picture. You know, that's
19 the good example of Unit 1 command and control
20 operating the plan during hot function.
21 CHAIRMAN RAY: Okay.
22 MR. STINSON: Okay. So this slide really
23 just highlights the differences in the plant. Unit 1
24 has been running for the last 15 years. When you add
25 on another unit, there is always a concern that people

1 will get on the wrong unit. So the bottom left hand
2 corner slide shows the upper MCC buckets as they were
3 previously and the new ones, white, being a common
4 system for the plant and the blue being the Unit 2
5 side of the plant.
6 So when you step up to that, the MCC, it's
7 very clear, you know, which unit is associated with a
8 bucket. The same way on the right hand side. This is
9 a CCW pump room, kind of a before and then after
10 showing the -- what the finished product will look
11 like.
12 Let's go to the next slide. Turbine deck.
13 Just looking at area completeness, we had a chance to
14 add our MSR heaters and a lot of the equipment on that
15 deck itself.
16 Next slide. And just a final look at a
17 close out of that painting area, coatings area there,
18 as we kind of de-staff Siemens as they finish their
19 work on the turbine, actually a week ago Friday. So
20 we are busy getting that ready for pre-op.
21 We went through a very long, about three
22 month, schedule reassessment process to get confidence
23 in our schedule for completion. And I won't go
24 through the detail here, but we basically went through
25 every area of engineering, construction, startup,

1 validated either through looking at all of one area or
2 through sampling the work to go and at the end of May
3 came up with a schedule that we will talk about here.
4 Let's go to the next slide. And it really
5 pointed us towards -- I mean, the philosophy that we
6 used was what have we done historically? What can we
7 kind of bank on going in the future for unit rate
8 performance and construction? What about in a startup
9 area, what have we seen in terms of testing hours and
10 our ability to take these turnovers and immediately
11 start working?
12 So we looked at kind of two areas. Let's
13 validate our construction process if we can, in fact,
14 do better. So we looked at unit rate performance,
15 looked at our peak direct work earned performance, how
16 productive can we be in the field? We looked at our
17 staffing ratios for filled non-manual and then our
18 paper closure performance. All these areas kind of
19 dictate how quickly we can complete the unit.
20 And so we looked at kind of a three month
21 area that we are going to push for construction
22 productivity with the number of systems that we are
23 looking at completing and targeted man-hours that we
24 will earn in over that period.
25 Next slide. Also, with startup, that's

1 the other area we wanted to test. So we want to test
2 their procedures, how well they can develop procedures
3 and perform those, component test performance, how
4 well we do there. Just the overall organization of
5 how they perform when we start adding more and more
6 systems for them to test.
7 And finally, you can take that you are
8 doing component testing and then you do system testing
9 and then how can the organization react to doing
10 milestone testing where we bring in multiple systems
11 to test. So that was what our summer program is about
12 and ending our fall program.
13 Next slide. A few looks at taking term
14 buildings. This is areas which is nearing completion.
15 We should have all systems turned over by the end of
16 July with just a couple of systems feeding over into
17 August. And so what we wanted to do was test our
18 ability to finish systems, but also major milestones
19 like short cycle for the condenser, do our condenser
20 hydros, do our long-cycle, that allows us to test
21 multiple parts of organizations. So we will do that
22 through early October.
23 Next slide. The other key areas that we
24 have backlogs and we want to reduce for a lot of
25 reasons, primarily though, within those backlogs are

1 risk. There are items that may turn out to be work.
2 And so we want to make sure that we get that backlog
3 worked out, so we have a minimum amount of risk
4 through our schedule going forward.
5 So programs like Active Refurbishment, you
6 know, we have gone through great efforts to make sure
7 that our plant is ready to operate with valves, pumps
8 and motors and so the idea is complete all that work,
9 so that they are ready for testing with the only
10 exception being that we have our auxiliary building
11 secondary containment that we want to -- we have to
12 maintain. And so we may not have all of those valves
13 complete, but, at the most, that's about 50 safety-
14 related valves.
15 The control room design review, we will
16 have that work essentially complete, that will give us
17 the ability to bring that curtain down, so we won't be
18 adding any impact to the Unit 1 side.
19 Work order closure, that we have about a
20 900 backlog of work orders that are complete in the
21 field, but not yet closed and in our vault. And so we
22 want to bring that down to the average of about 30
23 days, that should give us a backlog of about 400 to
24 500. So we want to bring that down.
25 And also, in our Corrective Action

1 Program, we want to bring that load down until it
2 averages about 45 days. So we have about 3,000
3 Corrective Actions that have to be worked down through
4 is area. Once again, it's a way for us to reduce risk
5 on the project.
6 And the last slide really shows our major
7 milestones. And it talks about whether we make a
8 September date or July date and what those key
9 milestones, what dates they will follow on.
10 CHAIRMAN RAY: Okay. Now, early on, there
11 was a need to fit outage windows for some of the work,
12 but you appear to have eliminated that was a
13 constraint on your schedule, so that if it takes
14 longer, it just takes longer, but the lights don't go
15 out as a result, I take it.
16 MR. STINSON: Right. At this point, we
17 don't have reason to take a mid-cycle outage. You
18 know, if some -- we were to discover a reason for
19 that, we certainly would take it, but, at this point,
20 we don't see a need for it.
21 CHAIRMAN RAY: Yes. I mean, I think that
22 as long as there aren't -- there isn't something like
23 an outage requirement on Unit 1, the work that you are
24 doing will just take as long as it takes to get it
25 done.

1 MR. STINSON: That's correct.

2 CHAIRMAN RAY: We are not having to meet

3 some external window like that. That was something we

4 had questions about earlier on, but no longer is an

5 issue, apparently.

6 Any other comments or questions on project

7 status? Thank you.

8 Okay. Two things. The first one would be

9 to ask whether has anyone sought to make any public

10 comments? Girija? And I take it no one is stepping

11 forward to a microphone to do so.

12 So we will wrap-up here. I mentioned out

13 the outset subcommittee meetings currently scheduled.

14 Girija has raised a question about whether we want a

15 meeting prior to the next scheduled meeting, October

16 5th. I don't think so. I don't think so because it

17 looks to me like the Full Committee meeting is far

18 enough distance that if there is a need for us to have

19 other subcommittee meetings, it would behoove us to do

20 so later, rather than sooner, thereby having less,

21 fewer unresolved or open items available.

22 Pat, do you have any comment on that?

23 MR. MILANO: No, sir. Well, as a matter

24 of fact, that leads right into what I was going to

25 talk about.

1 CHAIRMAN RAY: Okay.

2 MR. MILANO: And just to give you a quick

3 synopsis of where we stand, in October we are going to

4 be talking -- we are going to be closing out the last

5 of the items that we have never discussed before this

6 -- the Committee. And that is accident transient

7 analysis including dose consequences, that will be the

8 predominant focus for next time, along with what we

9 consider to be Chapter 11, which is rad waste

10 processing and, basically, dose consequences from

11 normal operation, those are the big areas.

12 And then after that, we have fire

13 protection that you have -- that we have never talked

14 to you about. That's the one where we have been

15 talking with Mr. Shukla about and we will probably

16 have to have a subcommittee meeting in the first

17 quarter of calendar year 12 to discuss that one.

18 The staff is currently progressing to

19 complete about January with their safety evaluation

20 for fire protection.

21 The other items we will be doing in

22 addition to these is we will be discussing the open

23 issues as they -- as we close them out. In

24 particular, those open issues that have -- where the

25 staff has taken -- has had to do some major review

1 effort in order to complete its reasonable assurance
2 finding.
3 MEMBER RYAN: So the dose consequence,
4 that's targeted for October?
5 MR. MILANO: We are -- open items, we are
6 going to be discussing as we complete them in October,
7 December and then some time in let's say February or
8 March.
9 MEMBER RYAN: So you are not going to try
10 and get it all in one meeting? It will be over three?
11 MR. MILANO: No, it will be over three
12 meetings.
13 MEMBER RYAN: Okay.
14 MR. MILANO: I don't envision us being
15 able to close open items --
16 MEMBER RYAN: Right.
17 MR. MILANO: -- quickly. We will probably
18 have those right to the end.
19 MEMBER RYAN: I just want to understand.
20 MR. MILANO: Yes, sir.
21 MEMBER RYAN: That's fine.
22 CHAIRMAN RAY: On an issue like fire
23 protection, you know, one of the sort of unique
24 factors that we deal with here is that there is the
25 Commission's direction as to Unit 1 being a basis for

1 what we find acceptable on Unit 2.

2 And yet, areas where upgrades are needed,

3 we are supposed to take those into account on Unit 2,

4 if the opportunity presents itself even ahead of Unit

5 1 if they are going to be done on Unit 1 later, for

6 example. 191 being an example on that issue.

7 So we need to keep that in mind and it

8 adds to the challenge to always remember that we are

9 not looking at this as a stand-alone plant, but rather

10 one that is constrained by Unit 1, fundamentally.

11 MR. MILANO: In particular, when you --

12 when we do come before you to talk about fire

13 protection, you will see a major upgrade to the Unit

14 2 and common areas in their approach, especially

15 towards operator manual actions and justifications and

16 safe shutdown evaluations.

17 CHAIRMAN RAY: Well, okay, that's fine.

18 I would add that, you know, we are going to have to

19 mull over this problem of, I kept mentioning our

20 experience in Design Certification, not having, which

21 is different not the same, but, enough detail that

22 would allow us to be confident that we were basing our

23 finding on something that was permanent, not just what

24 somebody happened to think today they were going to

25 do.

1 And we are going to have to think about
2 that, I guess, as to whether there is anything that we
3 want to feedback to you beyond just what you have
4 heard here today.
5 As you say, it's obviously a matter of
6 judgment ultimately. And yet, it's an important
7 judgment that is made. And at this point, when you
8 are dealing with an SER, you know, for a single
9 chapter that is this big along on top of an FSAR, as
10 well as other references that exist, it becomes tough
11 and you have admitted that it's as tough for you as it
12 is for us, I guess.
13 MR. MILANO: You are correct. I mean, it
14 is -- we understand and we, you know, have empathy for
15 what you are going through. And that's generally why
16 we felt the need to put out that Supplement 21, which
17 basically didn't really evaluate much of anything, but
18 just kind of laid out the framework of how we started
19 the project. What was -- what did the staff consider
20 to be already addressed and what was left to be done?
21 And even with, you know, what was left --
22 what we thought was left to be done, when we did that
23 almost two years ago, you are seeing that just
24 Supplements 22 and 23 were each in the 300 to 400 page
25 range.

1 CHAIRMAN RAY: Yes.

2 MR. MILANO: And I believe the next one

3 will probably be in that same category. It has been

4 a lot of work.

5 CHAIRMAN RAY: Well, we will do our best.

6 And like I say, if we have anything more to say on

7 this issue that we are just now wrapping up with, we

8 will let you know. I don't know what it would be or

9 when it would be, but I'm not sure that right now we

10 are satisfied, notwithstanding the fact that we spent

11 the entire time here today, you know, on this one

12 area, that we don't need to do something more or

13 different, but we will think about that and let you

14 know.

15 MR. MILANO: And we will be working with

16 Mr. Shukla to --

17 CHAIRMAN RAY: Yes.

18 MR. MILANO: -- figure out what we -- you

19 know, what items in particular to what we were

20 planning to address in October that we need to do.

21 CHAIRMAN RAY: All right. With that, if

22 there is nothing more, not hearing anybody, we stand

23 adjourned.

24 (Whereupon, the meeting was concluded at

25 11:51 a.m.)

TENNESSEE VALLEY AUTHORITY
WATTS BAR NUCLEAR PLANT UNIT 2

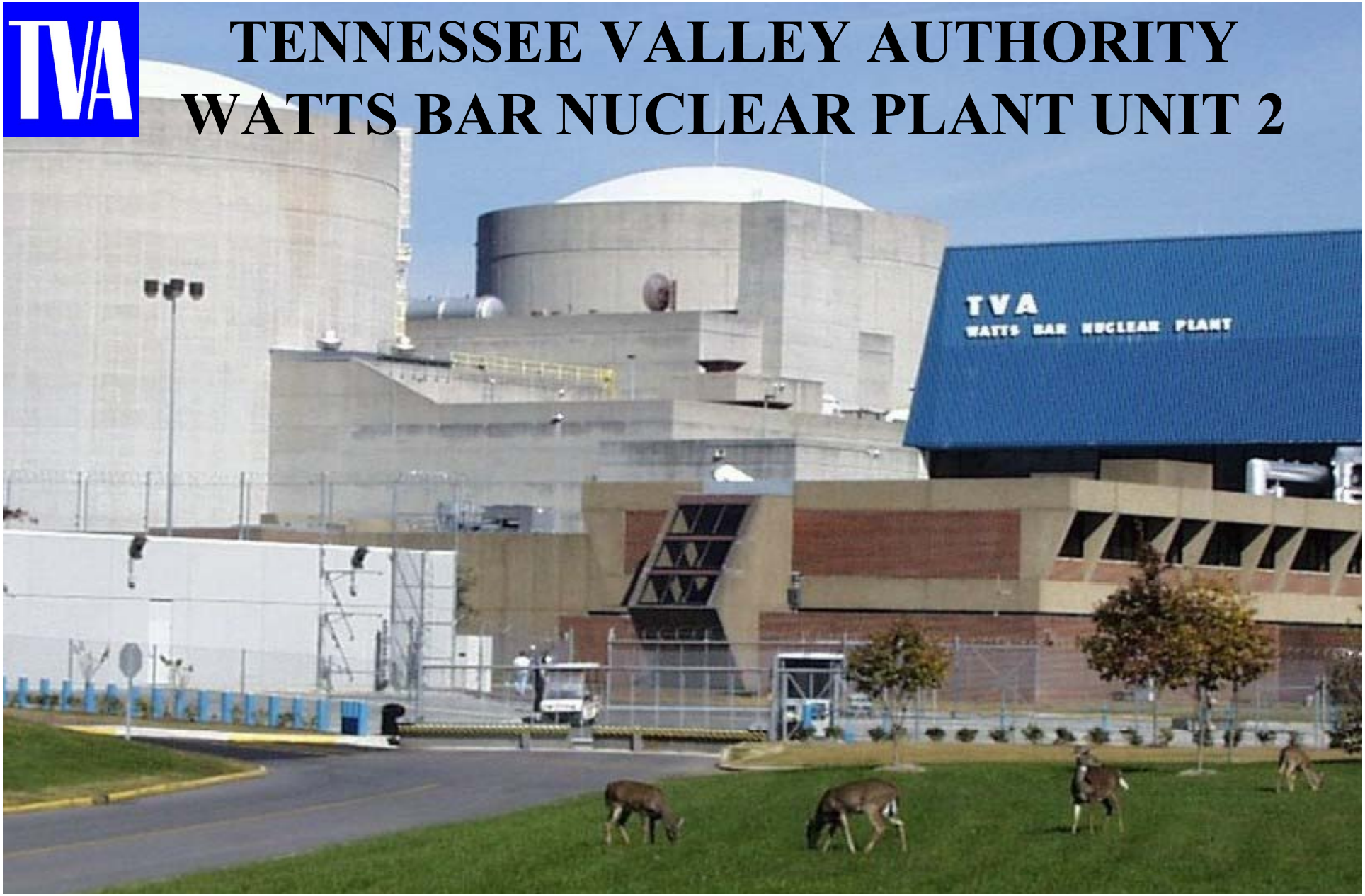

WBN Unit 2 ACRS Presentation

July 12, 2011

Agenda

- Construction Completion Status - Dave Stinson
- Instrumentation and Controls (FSAR Chapter 7) – Steve Hilmes
- Reactor (FSAR Chapter 4) – Frank Koontz
- Auxiliary Systems (FSAR Chapter 9) – Frank Koontz
- Questions

Construction Completion Status

WBN2 Completion Status

- Project Status Update
- Schedule Reassessment Process
- System Turnover Schedule
- Validation Process - - Summer Push
  - Construction Productivity
  - Startup Productivity
  - Backlog / Program Reduction
- Major Milestone Schedule
- Questions

WBN2 Completion Status

Engineering

- Overall Progress – 85% complete
- All Engineering Resources at Site
- Current Focus Areas and Challenges
  - Field Support
  - Corrective Action Programs and Special Programs Completion
  - Licensing Support (Fire Protection, Environmental, Digital I&C)

Construction

- Successfully completed scope required for the Unit 1 outage
- Improved direct work productivity (19.7% to 25%)
- Overall Progress – >62.5% complete
- Current Focus Areas and Challenges
  - Staffing critical positions
  - Field Engineers
  - Planners (work plan writers)
  - Developing workable backlog of work plans to support craft load (currently 350K)
  - Staffing craftsmen to support up to 60,000/week earned hours for direct work

WBN2 Completion Status

Active Refurbishment

- Program Status
  - Safety-Related Valves (all types) – 70%
  - Safety-Related Pumps – 77%
  - Safety/Quality-Related Motors – 90%

Startup Testing

- Twenty-eight systems turned over to Startup Test Organization with three being turned over in May and 4 completed in June
- Integrated Safeguards Test – To be performed with Unit 1 on-line after Hot Functional Tests.
- Essential Raw Cooling Water – Informational flow balance completed during Unit 1 outage Spring 2011 – Final flow balance without mid-cycle outage.

WBN2 Completion Status

Area Completion – Control Room

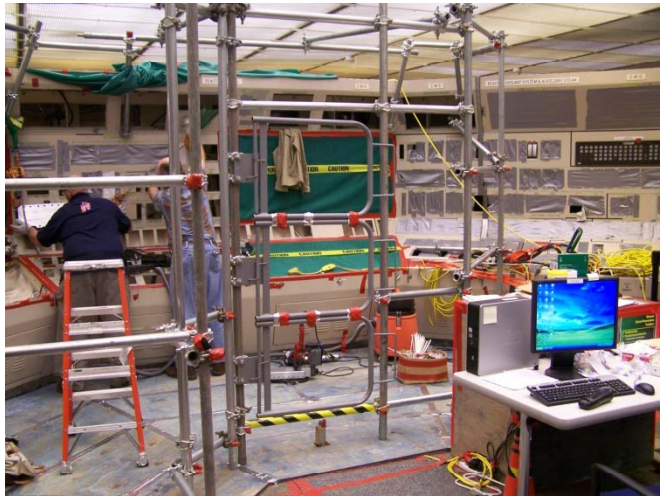

WBN2 Completion Status

Area Completion – Control Room

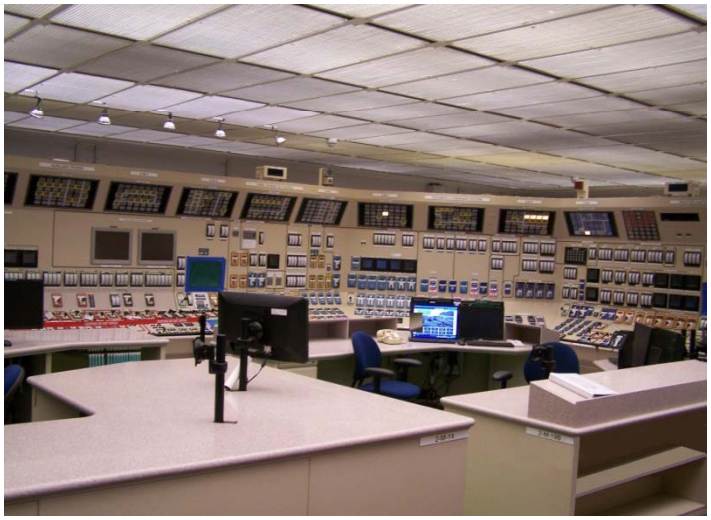

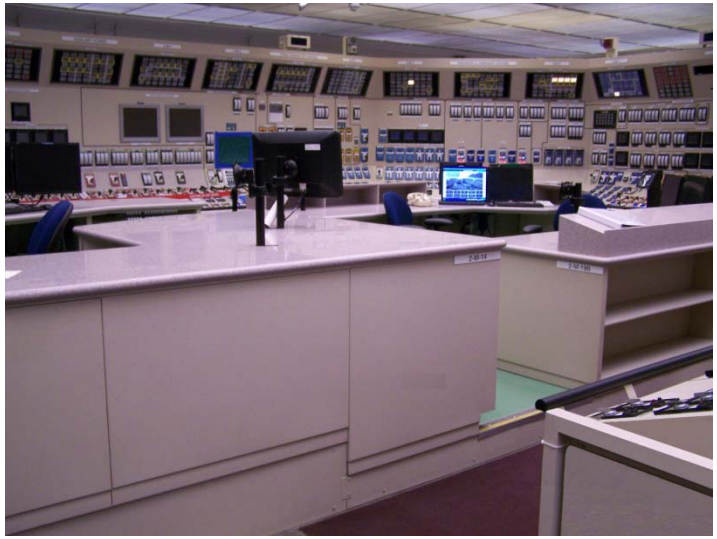

WBN2 Completion Status

Area Completion – Condenser Circulating Water (CCW) Pump Room

WBN2 Completion Status

Area Completion – CCW Pump Room

WBN2 Completion Status

Area Completion – Main Turbine Deck

WBN2 Completion Status

Area Completion – Main Turbine Deck

Schedule Reassessment Process

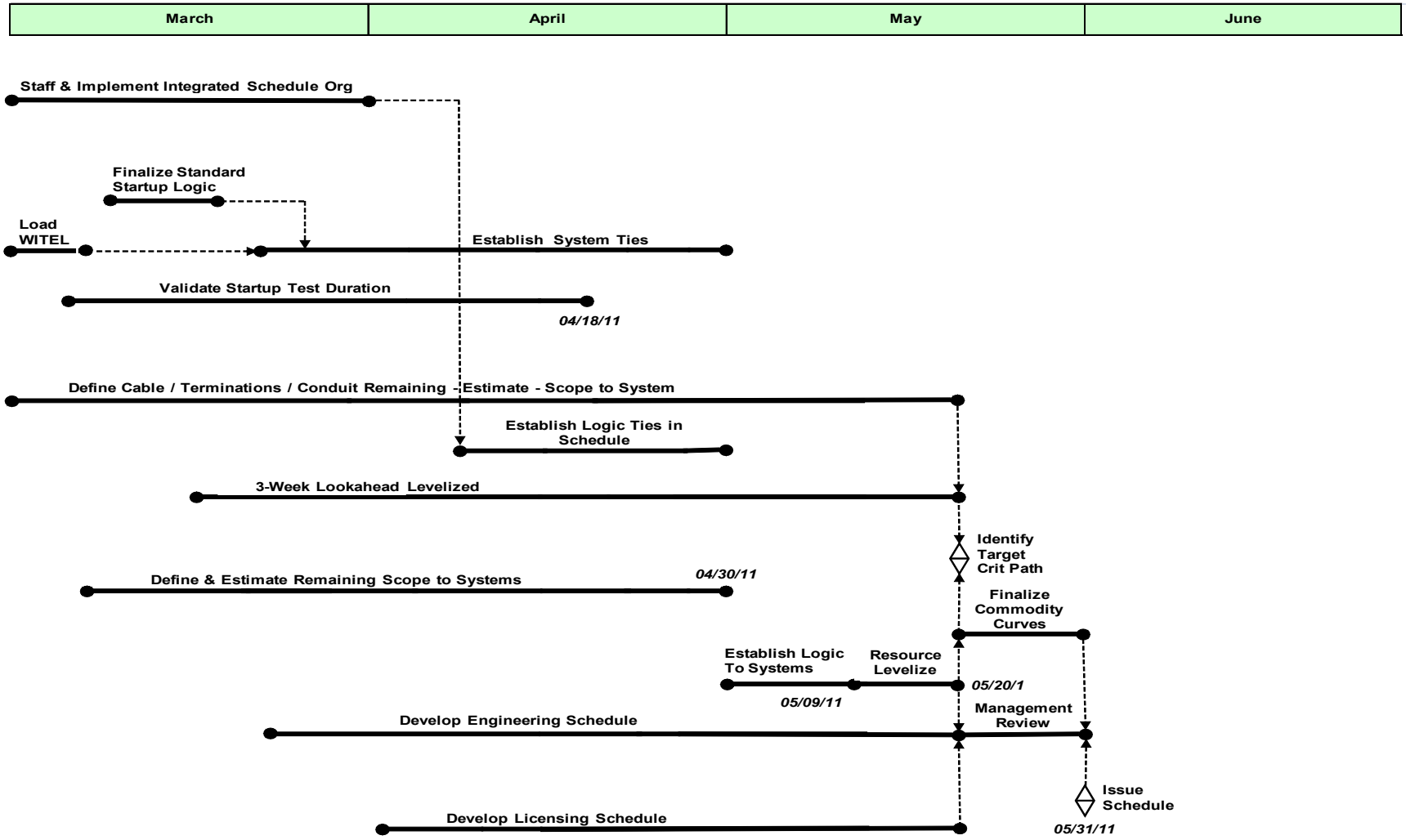

Updated: 6/15/11

Construction Validation Process

- Validate Unit Rate Performance
- Validate Peak Direct Work Earned Performance
- Validate Staffing (FNM ratio) Performance
- Validate Paper Closure Performance

Construction Productivity – Summer Push

SYSTEM TURNOVER SKYLINE - SEPTEMBER - 2012 FUEL LOAD

Mar -10	Apr-10	May -10	Jun-10	Jul-10	Aug-10	Sep-10	Oct-10	Nov-10	Dec-10	Jan-11	Feb-11	Mar-11	Apr-11	May-11	Jun-11	Jul-11	Aug-11	Sep-11	Oct-11	Nov-11	Dec-11	Jan-12	Feb-12	Mar-12	Apr-12	######
																									250	
																									030B	
																									013	
																									030H	
																									251	
															SUMMER PUSH										041	
																								030L	040	
																								030C	228	
																								026	033	
																								084	234	
																								030G	043	
																							001	031	030K	
				46.1								081.1											003B	030I	270	015
				047B							037	063.1			030F		006	030J.1		077			059	092	268	044
				047A		061.0			046A		209	067.3		030N	014	067	030E	081	304.1	072			068	079	046B	085
280				035B	032	024		261	002.2		210	054	030O	203	005	030D	030A	074	062	061		030J	201	090	064	078
027	055			098	24.1	007		035C	035A	099	067.1	067.2	047C	030M	058	036	002	070	063	244	202	003A	065	052	094	271

Startup Validation Process

- Validate Startup Test Procedure Performance
- Validate Component Test Performance
- Validate Startup Organizational Performance
- Validate Milestone Focused Performance

Startup Productivity – Fall Push

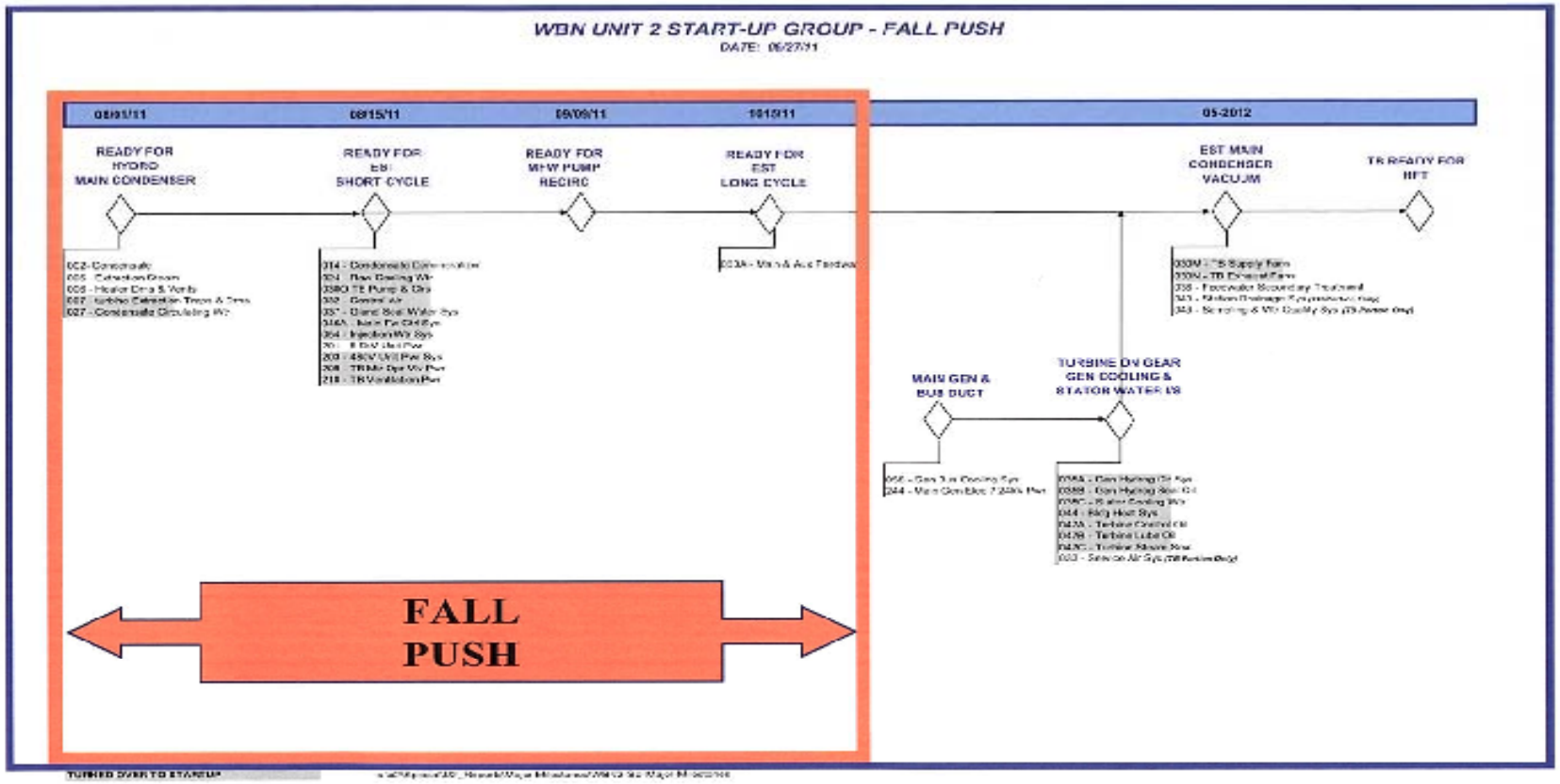

Backlog / Program Reduction - Validation Process

- **Active Refurbishment**
  - Safety-Related Valves (all types) – Complete except ABSCE constrained
  - Safety-Related Pumps – Complete
  - Safety/Quality-Related Motors – Complete

- **Control Room Design Review**
  - Essentially complete

- **Work Order Closure**
  - Goal of average age of 30 days or less

- **PERs**
  - Goal of average age of 45 days or less

Major Milestone Schedule

WBN UNIT 2 STARTUP MAJOR MILESTONES

Revision 1 - 6/8/11

	OPEN VESSEL	RCS FILL &	COLD HYDRO	ILRT	SECONDARY PLT	HFT	CORE LOAD
SEPT	12/05/11	04/19/12	04/20/12	05/07/12	05/20/12	05/20/12	09/28/12
JULY	10/07/11	02/22/12	02/27/12	03/10/12	03/23/12	03/23/12	07/31/12

OPEN VESSEL

030A- AB Room & Area Coolers
032 -Control Air Sys
055 - Annunciator
062 - Chemical & Volume Cntl Sys
063 - Safety Injection Sys
063.1 - Safety Injection Partial
067 - Essential Raw Cooling Water
070 - Component Cooling Water Sys
074 - Residual heat Removal Sys
077 - Waste Disposal
081 - Primary Makeup Water Sys
098 - Foxboro IA
099 - Reactor Protection Sys
261 - Plant Computer Sys

RCS FILL &

013 - Fire Detection
068 - Reactor Coolant
202 - 6.9kV Rx Coolant Pmp Pwr

COLD HYDRO

052 - Loose Parts Monitoring
030H - Lower Compartment Clrs

ILRT

030E - Ctmt Air Return Fans
030F - Ctmt Vent Air Cleanup Units
030J - Containment Purge
061 - Ice Condenser
064 -Primary Containment Sys
065 - Emergency Gas Treatment (EGT
072 - Containment Spray
090 - Radiation Monitoring

SECONDARY PLT

002 - Condensate
003 - Main & Aux Feedwater
005 - Extraction Steam
006 - Heater Drns & Vents
007 - Turbine Extraction Traps & Drns
014 - Condensate Demineralizer
024 - Raw Cooling Wtr
026 - High Pressure Fire Protection
027 - Condensate Circulating Wtr
030M - TB Supply Fans
030N - TB Exhaust Fans
032 - Control Air
033 - Service Air Sys
035A - Gen Hydrog Clr Sys
035B - Gen Hydrog Seal Oil
035C - Stator Cooling Wtr
036 - Feedwater Secondary Treatment
037 - Gland Seal Water Sys
040 - Station Drainage Sys
044 - Bldg Heat Sys
046A - Main Fw Ctrl Sys
047A - Turbine Control Oil
047B - Turbine Lube Oil
047C - Turbine Steam Seal
054 - Injection Wtr Sys
058 - Gen Bus Cooling sys
201 - 6.9kV Unit Pwr
203 - 480V Unit Pwr Sys
209 - TB Mtr Opr Vlv Pwr
210 - TB Ventilation Pwr
244 - Main Gen Elec 7 24kV Pwr
300 - TB Pump / Space Clrs

HFT

001 - Main Steam Sys
003A - Main Feedwater
003B - Aux Feedwater
015 - Steam Gen Blowdown
030C - N&S Vlv Vault Exhaust
030D - TDAFW Pmp Rm Exhaust Fan
030G - Upper Compartment Clrs
030I - CRDM Clrs
030L - Pres, Temp & Humidity Mon.
031 - Incore Inst Rm A/C
041 - Layup Water Treatment Sys
043 - Sampling & Wtr Quality Sys
046B - Aux FW Ctrl Sys
059 - Demin Water & Cask Decon
085 - Control Rod Drive Cbnt Refurb
250 - Auto/Manual/Public Phone
251 - Sound-Powered Phone

CORE LOAD

030B - AB Space Heaters
030K - Rx Bldg Space Heaters
078 - Spent Fuel Pit Cooling Sys
079 - Fuel Handling & Str Sys
084 - Flood Mode Boration Sys
092 - Neutron Monitoring Sys
094 - Incore Instr Sys RDA
228 - Aux Bldg Lighting Sys
234 - Heat Trace Sys
268 - Perm. Hydro Mitigation Sys
270 - TB Crane & Misc Sys
271 - Ctmt & AB Cranes & Misc

TURNED OVER TO STARTUP

C:\Nick\frags\WBN2-SU-Major-Milestones

Instrumentation and Controls
(FSAR Chapter 7)

I & C Modifications

- Reasons For Modifications
- Systems Affected
- Design
- Testing

I & C Modifications

- Systems Affected
  - Safety Related Actuation Systems
    - Digital/Analog Platform Maintained Same as Unit 1, if Possible.
    - Modifications To Hardware Only Made For Obsolescence of Components or to convert to 4-20 mA input/output.
    - Firmware is maintained the same as Unit 1.
    - Communications with other systems is transmit only
  - Safety Related Monitoring
    - Replaced if Obsolete or If Replacement In Unit 1 is Near Term
  - Non Safety Related Process Controls
    - Replaced if Obsolete
    - Replacement Planned on Unit 1 and is Significant for Plant Reliability

Safety Related Systems

- **Emergency Safety Function Actuation**

	Unit 1	Unit 2
Platform	Eagle 21	Eagle 21
Type	Microprocessor Based	Microprocessor Based
Difference between Unit 1 and 2	Board level component replacement due to obsolescence. Input/output set to 4-20 mA. vs. 10-50 mA. Barton Transmitters Changed to Rosemount with Exception of Filled Capillary Loops.	

- **Safety Actuation Logics**

	Unit 1	Unit 2
Platform	Westinghouse SSPS	Westinghouse SSPS
Type	Discrete Logic	Discrete Logic
Difference between Unit 1 and 2	Board level component replacement due to obsolescence	

Safety Related Systems

- **Source Range Monitors and Intermediate Ranger Monitors**

	Unit 1	Unit 2
Platform	Gamma Metrics	Thermo Fisher (Gamma Metrics) **300i**
Type	Analog With an Imbedded Processor For Shutdown Monitor (Digital Portion Same as Unit 1)	
Difference between Unit 1 and 2	Updated Version of the Unit 1 Display Hardware (analog vs. digital)	

- **Auxiliary Feed Water Control and Emergency Gas Treatment**

	Unit 1	Unit 2
Platform	Foxboro Spec. 200	Foxboro Spec. 200
Type	Analog	Analog
Difference between Unit 1 and 2	Board level component replacement due to obsolescence. Input/output set to 4-20 mA. vs. 10-50 mA.	

Safety Related Systems

- **Turbine Driven Auxiliary Feed Water Speed Control**

	Unit 1	Unit 2
Platform	Woodward EGM	Woodward EGM
Type	Analog	Analog
Difference between Unit 1 and 2	Input/output set to 4-20 mA. vs. 10-50 mA.	

- **Misc Safety Related Control**

	Unit 1	Unit 2
Platform	G-Mac, Robert Shaw	Foxboro Spec. 200
Type	Analog	Analog
Difference between Unit 1 and 2	Input 4-20 mA. vs. 10-50 mA.	

Safety Related Monitoring

- Containment High Range Radiation monitors
  - Changed to digital RM-1000 monitors
  - No digital communications to other systems

- Common Q – Post Accident Monitoring System (PAMS)
  - New system replaces Unit 1 ICCM-86 (Functionally equivalent to Unit 1)
  - Based on ABB-AC160 platform
  - Includes Two Independent Trains Consisting of:
    - RVLIS
    - Core Exit Thermal Couples
    - Saturation Monitor
  - Digital Communications is Uni-directional via Two Barriers
    - Maintenance Test Panel (qualified isolation device)
    - Data Diode (added for cyber security)

Non Safety Related Systems

- Rod Position Indication (CERPI)
  - Same System Installed in Unit 1
  - Newer Flat Panel Displays

- Loose Part Monitoring
  - Westinghouse Digital Metal Impact Monitoring System DMMS-DX System.
  - Unit 1 to replace next outage

- Turbine Servo Valve Control and Indication
  - Controls Match Unit 1
  - Change from turbine impulse pressure to turbine inlet pressure
    - Change from 2 to 4 channels of pressure input to process control system
    - Eagle Interlocks and AMSAC stays 2 channels, no change

Non Safety Related Systems

- Annunciator System
  - Updated hardware and operating system (DOS to Windows) vs. Unit 1

- Reactor Coolant Pump and Turbine Generator vibration monitoring
  - Updated hardware (Functionally equivalent to Unit 1)
  - Feed Pumps Thrust Trip 2 out of 3 Coincidence

- Containment Hydrogen Monitor
  - Downgraded to non safety-related
  - Single instead of dual monitors
  - New hardware is microprocessor

- AMSAC – Match Unit 1

Non Safety Related Control

- Process Control
  - Original design for Unit 1 and 2 – Analog Foxboro H-Line, Bailey (G-Mac), and Robert Shaw
  - New design is Foxboro Intelligent Automation (I/A)
    - Fault Tolerant Distributed Control System (DCS)
    - 15 Redundant Control Processor Pairs (CP)
    - Redundant Power Sources to Each CP Pair
    - Redundant data bus
    - For critical parameters, processors are hardwired to signal input and do not rely on the data bus for information
    - Interface for Operators Remains Control Stations
    - Redundant Sensor Algorithms Where Practical
    - Design is Segmented To Minimize Impact on Loss of a CP Pair or the Network
    - Auxiliary Control Room Not Connected to Network Except for Maintenance

Segmentation of Digital Control System

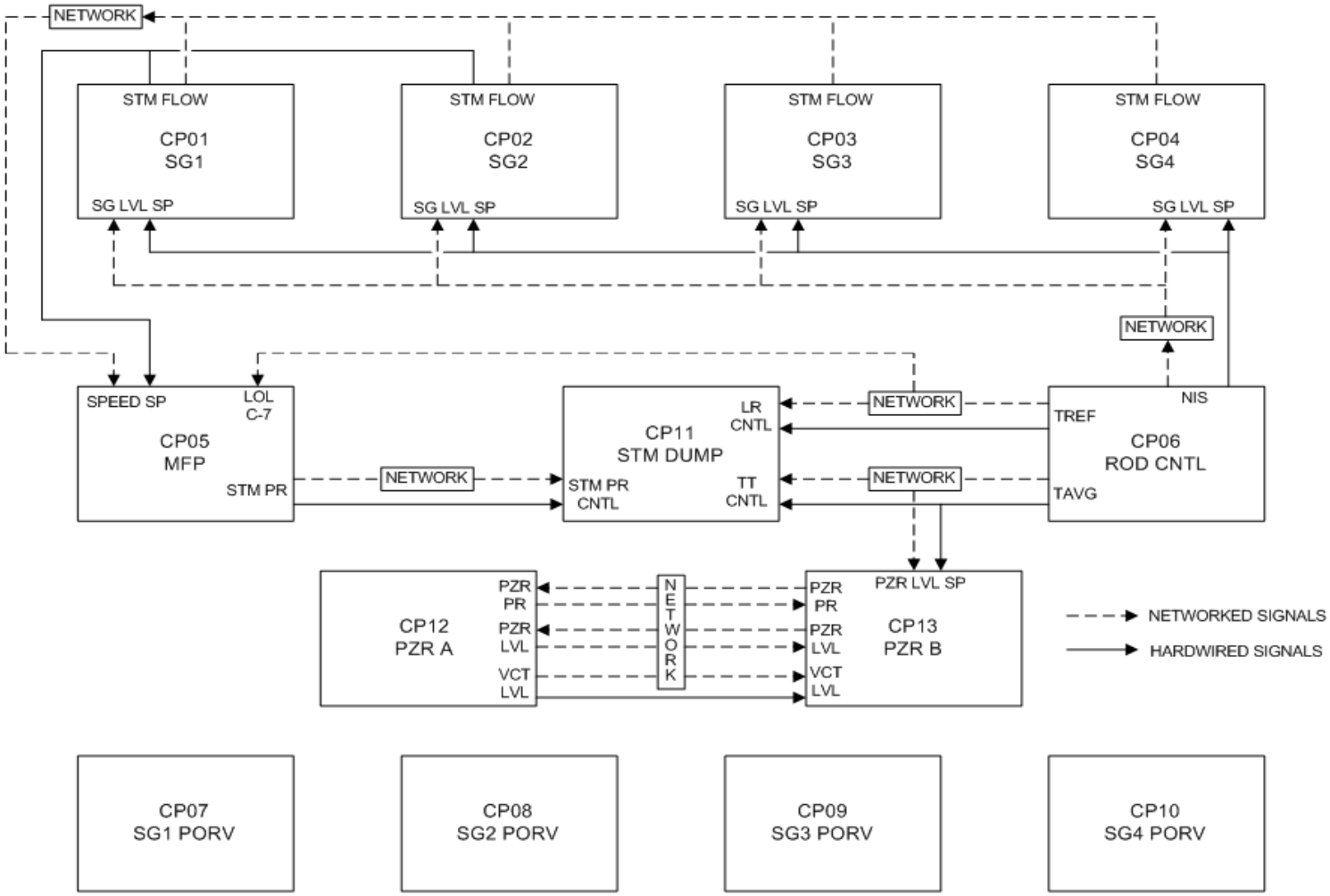

CP GROUPS AND
SHARED SIGNALS

ICS Change Review

- Hardware
  - Change from a ring type network to a mesh network
  - Updated servers, CPU's etc. due to equipment obsolescence
  - Unit 1 is in process of upgrading to match Unit 2

- Software
  - U2 software is based on U1 software. Small differences due to the CPU-type
  - Same basic applications exist on both U1 and U2 (SPDS, BISI, calorimetrics, etc.)

- Interfaces to External System
  - U2 ICS gathers data from same systems as U1
  - Systems Include
    - Ronan annunciator
    - Eagle-21
    - ICCM / Common-Q
    - LEFM
    - Bentley-Nevada vibration monitoring
    - CERPI

Process Computer

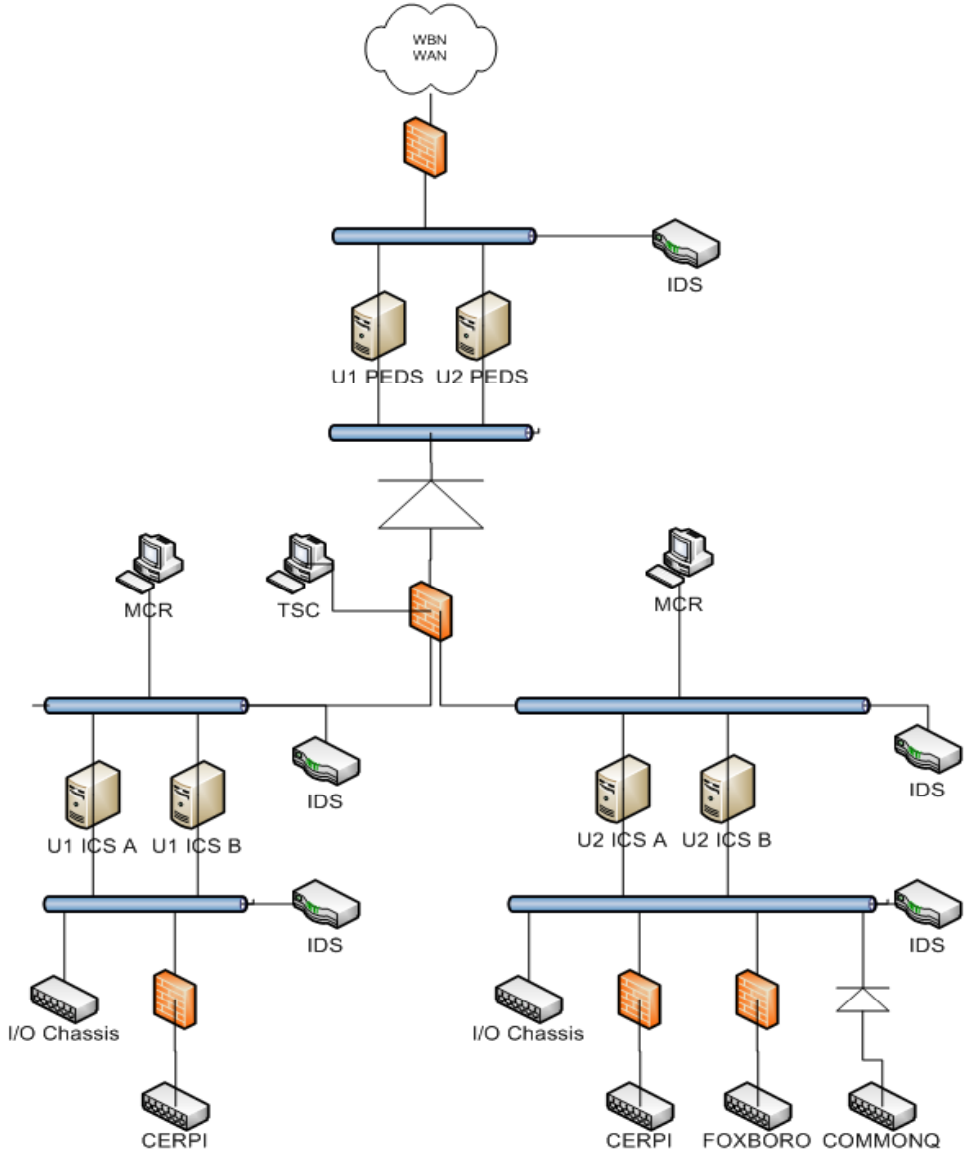

ICS Change Review

- Security
  - Intrusion detection and firewalls
    - Firewalls isolate control systems from ICS
    - Intrusion Detection System (IDS) monitors traffic at various layers of the network
  - Data Diodes isolate traffic from the external network.
  - One way communications from Safety Systems

I & C Changes

- Testing
  - All Factory Acceptance Testing Has Been Completed
  - Site Acceptance Testing in Progress
  - Pre-Operational Testing in Development.

Reactor
(FSAR Chapter 4)

Reactor

- Same Fuel Design as Unit 1
  - Fuel Type – Westinghouse RFA-2 with Zirlo clad
  - Number of Assemblies – 193
  - RWST and Accumulator Boron Concentration

- Differences
  - U2 – No Tritium Rods
  - U2 – Original Core Power of 3411 MWt – No LEFM uprate
  - U2 – Original Steam Generators
  - U2 – Common Q

- Thermal Conductivity
  - Generic Issue
  - License Condition to Follow Industry Approach

Auxiliary Systems
(FSAR Chapter 9)

Auxiliary Systems

- Shared Systems - General Design Criteria 5 Conformance
  - Perform Safety Functions
  - Accident in One Unit – Safe Cooldown of Second Unit

- Major Shared Systems
  - Essential Raw Cooling Water
  - Component Cooling Water

Auxiliary Systems

- Essential Raw Cooling Water
  - Replaced All 8 pumps
  - Meets Normal and Accident Requirements

- Component Cooling Water
  - Returned Pumps to Dual Unit Configuration

- Maintenance On-line (one unit in outage) Without Entering LCO

- Demonstrated Ability to Bring Non-Accident Unit to Cold Shutdown by 46 hours

Questions?

Common Q PAMs

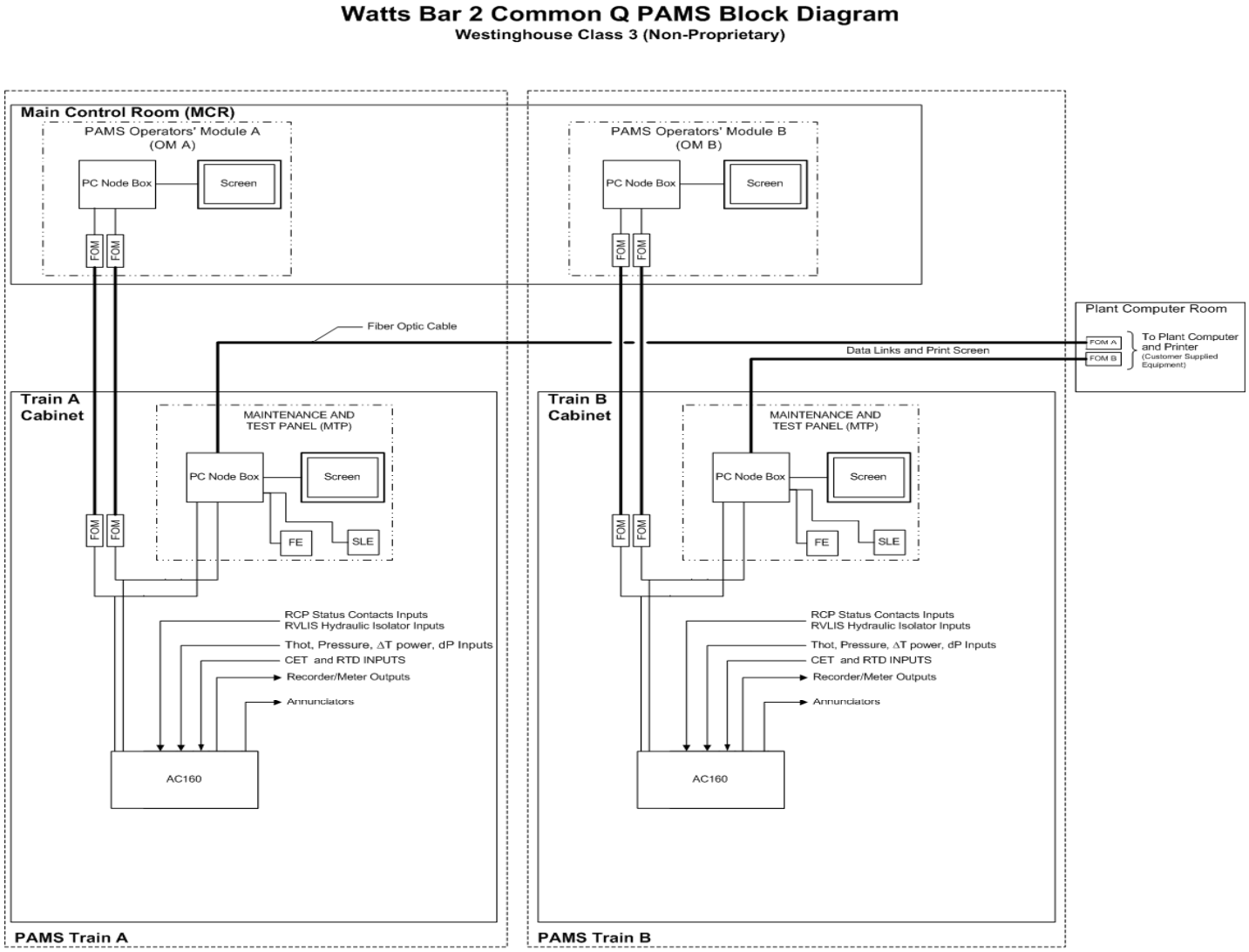

CET	Core Exit Thermocouple	IRP	Interposing Relay Panel	RTD	Resistance Temperature Detector
dP	Differential Pressure Signal	RCP	Reactor Coolant Pump	RVLIS	Reactor Vessel Level Instrumentation System
FE	Function Enable Keyswitch	RJT	Reference Junction Temperature	SLE	Software Load Enable Keyswitch
FOM	Fiber Optic Modem	Comm	Communication		

Integrated Safeguards Testing (IST)

- Regulatory Guide 1.41 – “Preoperational Testing of Redundant On-site Electric Power Systems to Verify Proper Load Group Assignments”
- Purpose - Verify Redundant Power Sources and Load Groups are Independent of Each Other
- Demonstrate Operation of a Load Group is Not Affected by the Partial or Complete Failure of Any Other Power Source or Load Group
- Regulatory Guide 1.41 Partially Satisfied for Dual Unit Operation During Unit 1 Pre-Operational Testing
- Regulatory Guide 1.41 Testing for Unit 2 to be Conducted with Unit 1 On-line

Integrated Safeguards Testing (IST)

Plant Electrical Design

- Four Power Trains – two for each unit
- Power Train – Diesel Generator, 6.9 Kv Shutdown Board and Lower Voltage Distribution System
- Two load groups (A and B)
- Unit 1 – 1A and 1B Unit 2 – 2A and 2B
- Four Diesels and Four 6.9 Kv Shutdown Boards in Service for Unit 1 Operation.
- Common Equipment on Unit 2 Shutdown Boards
- Unit 2 Lower Voltage Distribution System Not Totally in Service for Unit 1 Operation

Integrated Safeguards Testing (IST)

Unit 1 Independence Test

- Tested Group/Non-Tested Group
- Four Diesels and Four 6.9 Kv Shutdown Boards
- Included Lower Voltage Distribution Systems Required for Unit 1 Operation
- Unit 2 Lower Voltage Distribution Systems - Not Totally Included
- Ensure Tested Load Group Functions as Designed
- Ensure No Voltage on Non-Tested Load Group
- Demonstrates No Cross Connection between Load Groups

Integrated Safeguards Testing (IST)

Unit 2 Independence Test

- Tested Group/Non-Tested Group
- Each Power Train (A or B) will receive testing as follows:
  - Manual Safety Injection
  - Loss of Offsite Power
  - Safety Injection Coincident with Loss of Off-Site Power
  - Load Group Independence Test (simultaneous SI with LOOP)
- Will Not Disable Opposite Train Diesel
- Ensure Tested Load Group Functions as Designed
- Ensure No Voltage on Non-Tested Load Group
- Demonstrates No Cross Connection between Load Groups

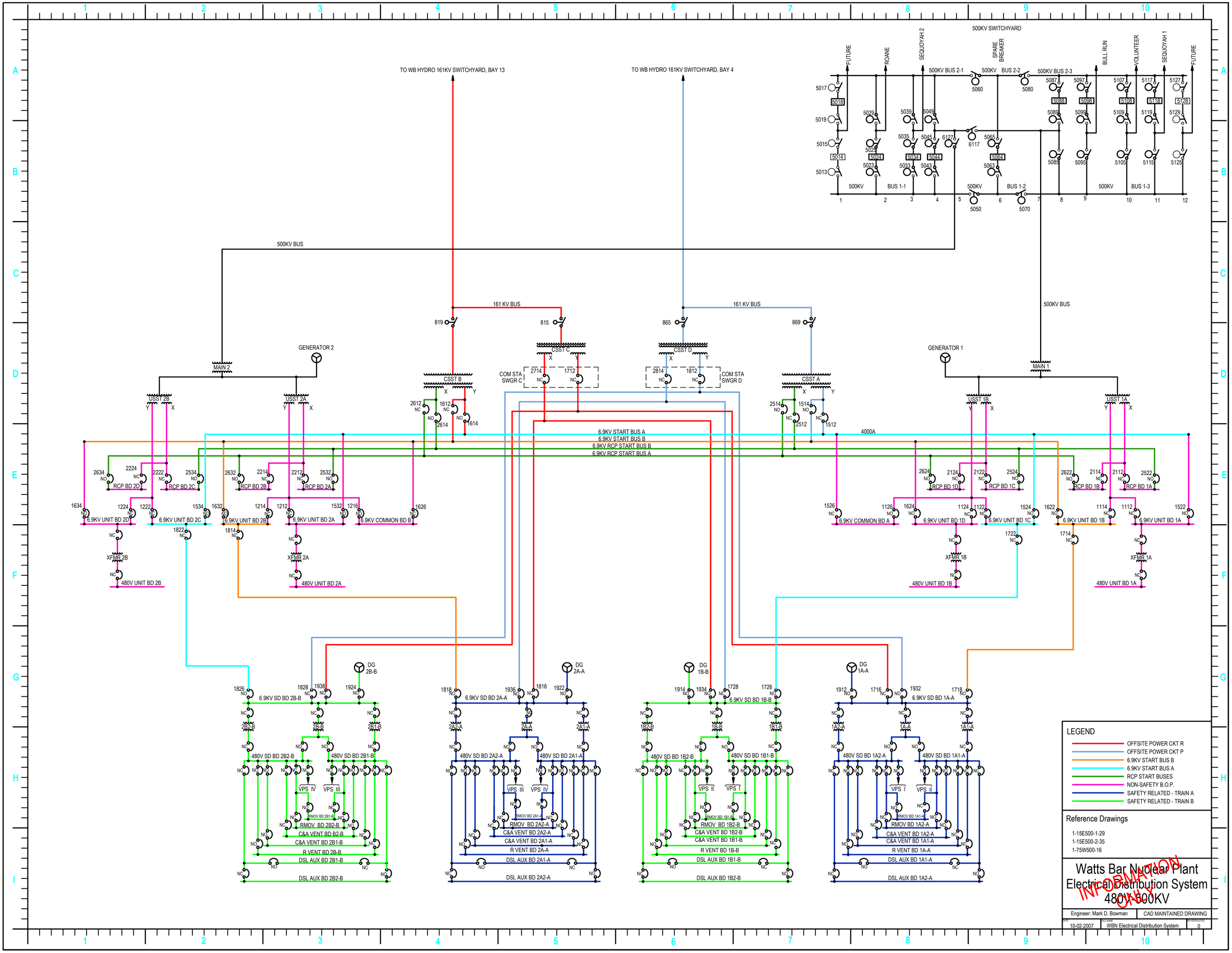
500KV SWITCHYARD
FUTURE
ROANE
SEQUOYAH 2
SPARE BREAKER
BULL RUN
VOLUNTEER
SEQUOYAH 1
FUTURE
500KV BUS 2-1
500KV BUS 2-2
500KV BUS 2-3
500KV BUS 1-1
500KV BUS 1-2
500KV BUS 1-3
TO WB HYDRO 161KV SWITCHYARD, BAY 13
TO WB HYDRO 161KV SWITCHYARD, BAY 4
500KV BUS
161 KV BUS
GENERATOR 2
GENERATOR 1
MAIN 2
MAIN 1
CSST B
CSST C
CSST D
CSST A
COM STA SWGR C
COM STA SWGR D
USST 2B
USST 2A
USST 1B
USST 1A
6.9KV START BUS A
6.9KV START BUS B
6.9KV RCP START BUS B
6.9KV RCP START BUS A
4000A
RCP BD 2D
RCP BD 2C
RCP BD 2B
RCP BD 2A
RCP BD 1D
RCP BD 1C
RCP BD 1B
RCP BD 1A
6.9KV UNIT BD 2D
6.9KV UNIT BD 2C
6.9KV UNIT BD 2B
6.9KV UNIT BD 2A
6.9KV COMMON BD B
6.9KV COMMON BD A
6.9KV UNIT BD 1D
6.9KV UNIT BD 1C
6.9KV UNIT BD 1B
6.9KV UNIT BD 1A
XFMR 2B
XFMR 2A
XFMR 1B
XFMR 1A
480V UNIT BD 2B
480V UNIT BD 2A
480V UNIT BD 1B
480V UNIT BD 1A
DG 2B-B
DG 2A-A
DG 1B-B
DG 1A-A
6.9KV SD BD 2B-B
6.9KV SD BD 2A-A
6.9KV SD BD 1B-B
6.9KV SD BD 1A-A
480V SD BD 2B2-B
480V SD BD 2B1-B
480V SD BD 2A2-A
480V SD BD 2A1-A
480V SD BD 1B2-B
480V SD BD 1B1-B
480V SD BD 1A2-A
480V SD BD 1A1-A
VPS IV
VPS III
VPS II
VPS I
RMOV BD 2B2-B
RMOV BD 2A2-A
RMOV BD 1B2-B
RMOV BD 1A2-A
C&A VENT BD B2-B
C&A VENT BD 2A2-A
C&A VENT BD 1B2-B
C&A VENT BD 1A2-A
C&A VENT BD 2B1-B
C&A VENT BD 2A1-A
C&A VENT BD 1B1-B
C&A VENT BD 1A1-A
R VENT BD 2B-B
R VENT BD 2A-A
R VENT BD 1B-B
R VENT BD 1A-A
DSL AUX BD 2B1-B
DSL AUX BD 2A1-A
DSL AUX BD 1B1-B
DSL AUX BD 1A1-A
DSL AUX BD 2B2-B
DSL AUX BD 2A2-A
DSL AUX BD 1B2-B
DSL AUX BD 1A2-A
LEGEND
OFFSITE POWER CKT R
OFFSITE POWER CKT P
6.9KV START BUS B
6.9KV START BUS A
RCP START BUSES
NON-SAFETY B.O.P.
SAFETY RELATED - TRAIN A
SAFETY RELATED - TRAIN B
Reference Drawings
1-15E500-1-29
1-15E500-2-35
1-75W500-16
Watts Bar Nuclear Plant
Electrical Distribution System
480V-500KV
INFORMATION ONLY
Engineer: Mark D. Bowman
CAD MAINTAINED DRAWING
DATE 10-02-2007
FILE NAME WBN Electrical Distribution System
REVISION LEVEL 0

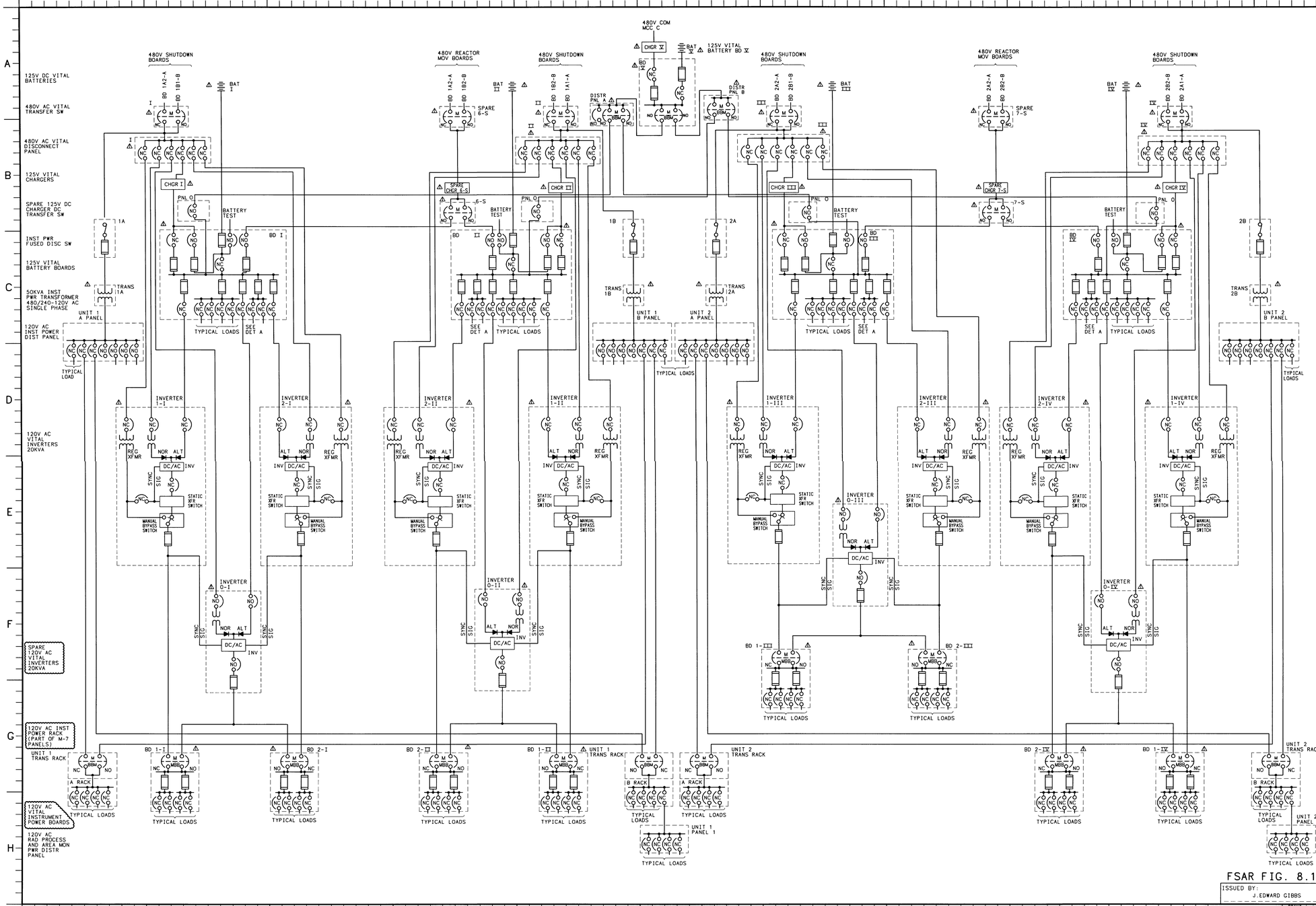

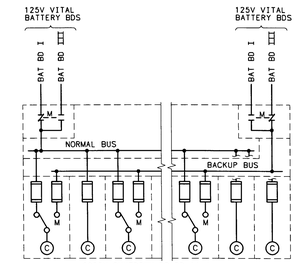

DETAIL A

SHUTDOWN BOARD	NORMAL BUS NOR	NORMAL BUS ALT	BACKUP BUS NOR	BACKUP BUS ALT
6900V 1A-A	I	III	III	I
480V 1A1-A	I	III	III	I
480V 1A2-A	I	III	III	I
6900V 2A-A	III	I	I	III
480V 2A1-A	III	I	I	III
480V 2A2-A	III	I	I	III
6900V 1B-B	II	IV	IV	II
480V 1B1-B	II	IV	IV	II
480V 1B2-B	II	IV	IV	II
6900V 2B-B	IV	II	II	IV
480V 2B1-B	IV	II	II	IV
480V 2B2-B	IV	II	II	IV

FSAR COLOR LEGEND
CHANNEL I
CHANNEL II
CHANNEL III
CHANNEL IV

SYMBOLS:

- NORMALLY CLOSED BREAKER
- NORMALLY OPEN BREAKER
- MANUALLY OPERATED TRANSFER SWITCH (INTERLOCKED BREAKERS)
- MAKE BEFORE BREAK SWITCH
- BREAK BEFORE MAKE SWITCH
- MANUALLY OPERATED TRANSFER SWITCH
- MANUALLY OPERATED TRANSFER SWITCH
- AUTOMATIC TRANSFER SWITCH

NOTES:
1. FOR PHYSICAL ARRANGEMENT OF EQUIPMENT SHOWN WITH A ⚠ ON THIS DWG REFER TO TVA DRAWING 45N218 OR 45N217-1.

REFERENCE DWGS:
1-45W703-1 THRU 4-----125V VITAL BATTERY BOARD SINGLE LINE
1-45W706-1 THRU 4-----120V AC VITAL INST POWER BOARD CONNECTION DIAGRAMS
1-45W709-1 THRU 3-----CHARGERS INVERTERS & MISC EQUIPMENT CONNNECTION DIAGRAMS
45N709-4 & 5----------CHARGERS INVERTERS & MISC EQUIPMENT CONNNECTION DIAGRAMS
45N1646-1,-3 & -4-----PANEL 1-M-7 CONNECTION DIAGRAMS
45N708-1 & -2-------INSTRUMENT POWER DISTRIBUTION PANELS CONNECTION DIAGRAMS

COMPANION DWGS:
45N700-2---KEY DIAGRAM

THIS CONFIGURATION CONTROL DRAWING SUPERSEDES UNIT 1 AS-CONSTRUCTED DRAWING 45N700-1 REVISION J.

REV	CHANGE REF	PREPARER	CHECKER	APPROVED	DATE
29	ADMIN	ESJ	GJB	JKG	12-14-09

REVISED BY ADMIN TO CORRECT NOTE LOCATIONS AS IDENTIFIED IN PER 210691 (T71 091214 800)

SCALE: NTS — EXCEPT AS NOTED

PROJECT FACILITY
POWERHOUSE
UNITS 1 & 2

TITLE
KEY DIAGRAM 120V AC & 125V DC VITAL PLANT CONTROL POWER SYSTEM

1 — WATTS BAR NUCLEAR PLANT, TENNESSEE VALLEY AUTHORITY — Q

DESIGN		INITIAL ISSUE	ENGINEERING APPROVAL
DRAFTER GJB/MEB	CHECKER S.R.HANCOCK	RO ISSUE PER WBEP 5.17 & RIMS B26 '90 0829 379	1 S.J.HUNTER
DESIGNER MLC/MEB	REVIEWER D.F.FAULKNER		2 M.A.M.KHAN
			3 C.C.LYKE FOR MCB

DATE 9-22-90 | 85 | E | 1-45W700-1 | R29

FSAR FIG. 8.1-3

ISSUED BY: J.EDWARD GIBBS

PRINTS REQ'D R ____ PRINT SIZE F — BR OR PROJ AB CE EE ME NE FE HE SE TE BL BF WB SQ — PRINT SIZE H — BR OR PROJ AB CE EE ME NE FE HE SE TE BL BF WB SQ

CAD MAINTAINED DRAWING

CONFIGURATION CONTROL DRAWING

ACRS Subcommittee Meeting Regarding

Watts Bar Nuclear Plant Unit 2

Status of Licensing and Inspection

Docket No. 50-391

July 12, 2011

U.S.NRC
United States Nuclear Regulatory Commission
Protecting People and the Environment

Agenda Topics

- **TVA**
  - Construction Completion Status
  - Instrumentation and Controls
  - Reactor
  - Auxiliary Systems - open items

- **NRC**
  - Status of Licensing and Construction Inspection
  - Supplement 23 to SER
  - Remaining Activities

NRR Presentation of Status of Licensing Activities

U.S.NRC
United States Nuclear Regulatory Commission
Protecting People and the Environment

U.S.NRC
United States Nuclear Regulatory Commission
Protecting People and the Environment

Status of Operating License Application

- Safety Evaluation Report
  - FSAR\SRP Topics
  - Generic communication items
  - Corrective action program plans
  - Programs
  - Technical Specifications
- Supplement to Final Environmental Statement
- Material Licenses (10 CFR Parts 30, 40, and 70)

U.S.NRC
United States Nuclear Regulatory Commission
Protecting People and the Environment

Safety Evaluation Report

- TVA amendments to FSAR received (A92 to A104)
- Staff review continues
- Supplements to original SER
  - SSER 21 - identifies regulatory framework
  - SSER 22 – FSAR Chapters 2, 3, 5, 6, 8, 9, 10, 13, 14, 17
  - SSER 23 – FSAR Chapters 4, 7
- Project challenges
  - Fire Protection Report (Section 9.5.1)
  - Accident and Transient Analyses (Section 15)
  - Closure of open items from SER review

U.S.NRC
United States Nuclear Regulatory Commission
Protecting People and the Environment

Safety Evaluation Report

- Generic communication items
  - Complete with 3 exceptions
  - GLs 04-02 and GL 08-01 and BL11-01
- Corrective action program plans (Complete)
- Programs
  - Security, emergency preparedness, quality assurance, and antitrust (Complete)
  - Fire protection and cyber-security (Ongoing)
- Technical Specifications
  - Staff proof and review

U.S.NRC
United States Nuclear Regulatory Commission
Protecting People and the Environment

Safety Evaluation Report Supplement 23 (SSER)

- For Publishing July 2011
- Chapters/Topics Covered
  - 4. Reactor
  - 7. Instrumentation and Controls
  - Parts of other chapters
    - 3. Design Criteria
    - 5. Reactor Coolant and Connected Systems
    - 6. Engineered Safety Features
    - 9. Auxiliary Systems
    - 10. Steam and Power Conversion
    - 14. Initial Test program
    - 21. Financial Qualifications

United States Nuclear Regulatory Commission

Protecting People and the Environment

SSER 23 – Section 4, Reactor

- Fuel Design
  - Unit 1 transition from Vantage 5H to RFA-2 fuel (Amendment 46; 2003)
  - Unit 2 core will be all new fuel of RFA-2
  - No tritium producing burnable absorber rods
- Fuel Design Bases and Functional Requirements
  - Used in the nuclear design of the fuel and reactivity control systems
  - Thermal performance and fuel thermal conductivity (open item)
  - Mechanical performance bounded by prior analyses
- Thermal-Hydraulic Design
  - Preoperational and startup test program commitments

U.S.NRC
United States Nuclear Regulatory Commission
Protecting People and the Environment

SSER 23 – Sec. 7, Instrumentation & Controls

Agenda

- Scope of I&C Evaluation
- Evaluation Methodology and Focus Areas
- Highlights of Key I&C FSAR Safety Evaluation Conclusions and Open Items
- Current Status
- Remaining Work

U.S.NRC
United States Nuclear Regulatory Commission
Protecting People and the Environment

Scope of I&C Evaluation

- Watts Bar Unit 1 10 CFR 50.59 and LAR evaluations related to Chapter 7 topical areas
- FSAR Chapter 7, Amendments 92 through 103
- Evaluation of requested supporting documents
- Audits of Eagle-21 and Common Q activities

U.S.NRC
United States Nuclear Regulatory Commission
Protecting People and the Environment

Safety Evaluation Methodology

Three types of Evaluations, per LIC-110 instruction:

- For WB2 systems proposed to be the the same as that reviewed and approved per NUREG-0847 (Safety Evaluation Report for Watts Bar Units 1 & 2), the staff confirmed that they are, in fact, identical.
  - Example: RX Pressure Interlocks for Low Temperature Overpressure Protection
- For WB2 I&C systems that are the same as WB1 systems that have been upgraded through LAR and 10 CFR 50.59 processes since the WB1 OL was granted: The staff verified that the proposed design of WB2 is in compliance with design requirements applicable to the current licensing basis for WB1.
  - Example: Eagle-21 Plant Protection System portion of RPS and ESFAS
- Design features that are unique to Watts Bar Unit 2 were reviewed in accordance with current staff regulatory positions.
  - Example: Common Q Digital Platform for 3 Post-Accident Monitoring Variables

U.S.NRC
United States Nuclear Regulatory Commission
Protecting People and the Environment

I&C Focus Areas

- Independence between control and protection systems
- Independence/Isolation between safety and non-safety
- Effects of single random failures on accomplishment of safety functions
- Equipment Qualification for new designs (EQ, seismic, EMI/RFI)
- Compliance with NUREG 0737, and Supplement 1 (Clarification of TMI-2 Action Plan Requirements)
- Compliance with design criteria from IEEE 279-1971 and IEEE 603-1991, as applicable
- Conformance with applicable Regulatory Guides and other Industry Codes and Standards

U.S.NRC
United States Nuclear Regulatory Commission
Protecting People and the Environment

RPS System Design

- NRC Staff verified through audit of the Eagle-21 configuration control documents that the system software is identical to that of WB1. Also, staff witnessed the Factory Acceptance Test.
- Hardware upgrades for WB1 were evaluated and found to still meet applicable criteria. Examples:
  - Newer, more reliable power supply module design
  - Analog input signal levels compatible with newer transmitters

U.S.NRC
United States Nuclear Regulatory Commission
Protecting People and the Environment

Example RPS Confirmatory Items

- Demonstrate via physical test of the evaluated interface that there is one-way communication connection from Eagle-21 to the non-safety plant computer
- Demonstrate via post-modification testing that the RTD input error of 0.2 degrees F identified on Rack 2 during Factory Acceptance Test has been remedied

U.S.NRC
United States Nuclear Regulatory Commission
Protecting People and the Environment

RPS Conclusions

- Contingent on the successful closure of the Confirmatory Items, the NRC staff concludes that the RPS for WB2 is the same as that for WB1 and therefore the NRC staff's conclusions regarding RPS compliance with all applicable regulatory criteria remain valid for WB2.

U.S.NRC
United States Nuclear Regulatory Commission
Protecting People and the Environment

ESF Actuation System Design

- The Eagle-21 portion of ESF for WB2 was found to be the same as that of WB1
- NRC staff evaluated the impact of design changes to ESF actuation system (newer hardware and system functional configuration) made to WB1 since WB1 OL was granted

  Examples:

  – Upgrade Auxiliary Feedwater System initiation controls to Foxboro Spec 200 Analog system
  – Newer, more reliable power supplies in SSPS cabinets
  – Test jacks added SSPS Cabinets to facilitate surveillance testing

U.S.NRC
United States Nuclear Regulatory Commission
Protecting People and the Environment

ESF Conclusions

- The Aux Feedwater Initiation and Control upgrade did not change any functional performance requirements
- The design for implementing the new equipment meets all applicable regulatory requirements
- FSAR description of ESF Actuation System Reliability and Failure Modes and Effects Analysis is functionally unchanged
- Implementation of TVA's previous commitments with regard to IE Bulletin 80-06 (ESF actions following reset of automatic initiation signals) found to be acceptable
- The Staff's previous conclusions regarding the ESF for WB1 remain valid for the WB2 design

U.S.NRC
United States Nuclear Regulatory Commission
Protecting People and the Environment

Setpoint Methodology

NRC Staff confirmed that WB FSAR Amendment 102 provides a description of the plant setpoint methodology that complies with applicable staff guidance for the establishment of Limiting Safety System Settings per 10 CFR 50.36:

- Regulatory Guide 1.105, Rev. 3, "Setpoints for Safety-Related Instrumentation"
- Regulatory Issue Summary RIS 2006-17, "NRC Staff Position on the Requirements of 10 CFR 50.36, "Technical Specifications," Regarding Limiting Safety System Settings during Periodic Testing and Calibration of Instrument Channels"

U.S.NRC
United States Nuclear Regulatory Commission
Protecting People and the Environment

Display Instrumentation

Focus areas:

- Post-Accident Monitoring
  - Compliance with Previous Commitments to Reg Guide 1.97
  - Use of Westinghouse Common Q platform for 3 Post-Accident Variables
  - Containment Hi Range Radiation Monitors
- Use of distributed plant process computer system (Integrated Computer System used to drive BISI, SPDS, TSC and Nuclear Data Links)
- Evaluation of Compliance with IE Bulletin 79-27 (Effects of Loss of non-1E I&C System Electrical Bus)

U.S.NRC
United States Nuclear Regulatory Commission
Protecting People and the Environment

Control and Display System Interfaces

- Evaluation of Safety-to-Nonsafety Data Communications
  - Key **Safety-to-Nonsafety** digital data communications links evaluated to ensure one-way communications is enforced:
    - Common Q PAMS-to-ICS
    - Eagle 21-to-ICS
  - Other **Safety-to-Nonsafety** communications are implemented through simple, hard-wired isolated analog or contact closure signals
    - Examples: Eagle 21-to-Foxboro ESF Actuation Sys
    - Containment Hi Range Radiation monitor-to-ICS

U.S.NRC
United States Nuclear Regulatory Commission
Protecting People and the Environment

Common Q Post-Accident Monitoring

- Based on an Updated Common Q Platform
- PAMS Performs Monitoring and Computations for Three Key Post-Accident Variables
  - Reactor Vessel Level Indication System
  - Core Exit Temperature
  - Subcooling Margin Monitor
- Two Type A, Category 1 Variables
  - Core Exit Temperature
  - Subcooling Margin Monitor

U.S.NRC
United States Nuclear Regulatory Commission
Protecting People and the Environment

Common Q Post-Accident Monitoring

- Reg. Guide 1.97, Rev 2 Type A Variables
  - "Those variables that provide primary information to the MCR operators to allow them to take preplanned manually controlled actions for which no automatic action is provided and that are required for safety systems to accomplish their safety functions for Chapter 15 design basis events. Primary information is information that is essential for the direct accomplishment of specified safety functions."
- Evaluation Criteria: RG 1.97 Rev. 2 and IEEE 603-1991
- Findings: Provided that satisfactory resolution of the Open Items is accomplished, NRC staff finds the proposed PAMS implementation to be acceptable.

U.S.NRC
United States Nuclear Regulatory Commission
Protecting People and the Environment

Post-Accident Monitoring

- **Key Open Items**
  - Demonstrate conformance with IEEE 603-1991.
  - Demonstrate conformance with RG 1.152.
  - Demonstrate conformance with RG 1.168 Rev. 1.
  - Demonstrate conformance with RG 1.180 for Hi Rad Monitors
  - Demonstrate conformance with RG 1.209 and IEEE 323-2003.
  - Justify/mitigate deviations from normative material in the SPM.
  - Describe how design supports periodic testing of the RVLIS function.
  - Verify acceptability of proposed Technical Specifications.

U.S.NRC
United States Nuclear Regulatory Commission
Protecting People and the Environment

Control Systems Not Required for Safety

- New distributed digital non-safety control system (where WB1 has analog controls) which was evaluated by staff per SRP Section 7.7
- Staff found there are no digital communications or interactions with safety systems
- Staff evaluated TVA's segmentation analyses and analyses of the effects of faults or power supply failures
- Conclusions: Meets regulatory requirements of 10 CFR 50.55a(a)(1) GDC-1, and GDC-13, Clause 6.3 of IEEE 603-1991 (sense and command interactions), and does not introduce new unanalyzed failures, nor increase likelihood or consequences of failures

U.S.NRC
United States Nuclear Regulatory Commission
Protecting People and the Environment

Status of WB2 I&C Design Evaluation

- NRC Staff is working with the staff of TVA to address and close-out open items. Open Items Coordination meetings still regularly held.
- Staff's evaluation of the Westinghouse WINCISE In-core Instrumentation System nearing completion. Focus is on qualification of Class 1E components and separation/isolation of 1E and non-1E components.
- Items which require completion of field tests are being identified as confirmatory items to be inspected prior to fuel load.

U.S.NRC
United States Nuclear Regulatory Commission
Protecting People and the Environment

Remaining Work

- Complete the evaluation of the new WB2 In-core Instrumentation System (WINCISE) to ensure compliance with applicable codes and standards
- Evaluate proposed WB2 instrument-related Technical Specifications, when submitted
- Continue close-out of remaining Open Items and support Region-II Office with identification of Confirmatory Items and other inspection-related items required prior to fuel load

United States Nuclear Regulatory Commission
Protecting People and the Environment

SSER 23 – Other Partial Sections

- **3.9.5 Reactor Pressure Vessel Internals**
  - Materials are consistent with those of the RVI components in WBN Unit 1 and are acceptable with respect to structural integrity and corrosion resistance
  - WBN Unit 2 used nickel-based Alloy X-750 bolts. Open item for TVA to justify not replacing clevis insert bolts
  - ASME Sections II and XI for design and inspection provide adequate assurance
- **3.10 Seismic and Dynamic Qualification of Seismic Cat. I Mechanical and Electrical Equipment**
  - No substantive changes from that approved for Unit 1

U.S.NRC
United States Nuclear Regulatory Commission
Protecting People and the Environment

SSER 23 – Other Partial Sections

- 5.4.3 Residual Heat Removal System
  - Provides required redundancy in components and design features
  - Provided an analysis in 1991, comparing the major systems related to natural circulation cooldown of WBN to those of Diablo Canyon, Unit 1, which showed that the systems adequately provide for natural circulation, boration, cooldown, and depressurization. (BTP RSB 5-1)
- 5.4.5 Reactor Coolant System Vents (II.B.1)
  - RCS vent system is acceptable, pending verification of the installation of the RCS vent system

United States Nuclear Regulatory Commission
Protecting People and the Environment

SSER 23 – Other Partial Sections

- 6.1.1 – ESF Metallic Materials
  - pH and chemistry controls adequate
  - Adequate controls on selection of materials
- 9.1.3 Spent Fuel Pool Cooling and Cleanup System

U.S.NRC
United States Nuclear Regulatory Commission
Protecting People and the Environment

SSER 23 – Other Partial Sections

- 9.2.1 Essential Raw Cooling Water System (ERCW)
- 9.2.2 Component Cooling System (CCS)
- 9.2.5 Ultimate Heat Sink
- 10.2.2 Turbine Disk Integrity

Region II Presentation of Status of Construction Inspection Activities

U.S.NRC
United States Nuclear Regulatory Commission
Protecting People and the Environment

U.S.NRC
United States Nuclear Regulatory Commission
Protecting People and the Environment

Status of Inspection Program

- Completed 2010 End-of-Cycle review
  - 14 Non-cited Violations issued in 2010
  - Potential substantive cross-cutting issue due to 4 findings with the same cross-cutting aspect
  - Currently issued 6 Violations through May 2011
- RII expended 14,700 staff hours on the project in 2010
- Utilizing temporary resident inspectors for 2 positions
- Filled position of Pre-operational testing Team Leader and added another senior project inspector
- Public meeting with TVA on updated schedule

U.S.NRC
United States Nuclear Regulatory Commission
Protecting People and the Environment

Inspection Activities

- Established 6-7 week inspection report frequency
- Maintaining routine inspections of controls to ensure construction activities do not adversely impact Unit 1
- PI&R focused inspection on item closure
- Closed eight CAP/SPs (including CAP sub-issues)
- Closed 94 of approx. 500 open inspection items
- Challenge: Inspecting a large number of open items prior to fuel load.

U.S.NRC
United States Nuclear Regulatory Commission
Protecting People and the Environment

Upcoming/Ongoing Inspections

- Commercial Grade Dedication
  - Assessing the ability of TVA to dedicate commercial grade items (CGI) in accordance with 10CFR50 and ensure that CGIs will perform their safety function
- System preoperational testing inspections (IMC 2513)
  - Review revised schedule for system turn-over dates: ensure inspection resources available for preoperational testing
  - Training NRC staff for pre-operational testing inspection
  - Assessing the scope and schedule for our inspection of supporting programs – RP, EP, security, etc.
- Resolution of Heinemann circuit breaker seismic qualification violation

U.S.NRC
United States Nuclear Regulatory Commission
Protecting People and the Environment

Conclusions

- Construction inspections are continuing; violations identified have been Severity Level IV or minor
- RII has adequate inspection resources
- Amount of inspection has increased consistent with increase in safety-related construction activities

Project Summary of Watts Bar Unit 2 Remaining Activities

U.S.NRC
United States Nuclear Regulatory Commission
Protecting People and the Environment

U.S.NRC
United States Nuclear Regulatory Commission
Protecting People and the Environment

Project Status

- Staff review continuing, with some delays
- Future Milestones
  - SER and FES-OL complete by March 2012
  - Complete ACRS review and provide decision
  - Conduct hearing and ASLB provide decision
  - Operational readiness assessment
  - Certification of as-built construction

U.S.NRC
United States Nuclear Regulatory Commission
Protecting People and the Environment

Expectations for Next Meeting

- Scheduled for October 2011
- Accident and Transient Analyses
- Radioactive waste Management
- Radiation Protection
- Cyber-Security Program