MITSUBISHI HEAVY INDUSTRIES, LTD.
16-5, KONAN 2-CHOME, MINATO-KU
TOKYO, JAPAN

August 11, 2011

Document Control Desk
U.S. Nuclear Regulatory Commission
Washington, DC 20555-0001

Attention: Mr. Jeffrey A. Ciocco

Docket No. 52-021
MHI Ref: UAP-HF-11259

Subject: MHI's Response to US-APWR DCD RAI No.779-5865 Revision 3 (SRP 09.04.03)

References: 1) "Request for Additional Information No. 779-5865 Revision 3, SRP Section: 09.04.03 – Auxiliary and Radwaste Area Ventilation System Application Section: 9.4.3" dated July 11, 2011.

With this letter, Mitsubishi Heavy Industries, Ltd. ("MHI") transmits to the U.S. Nuclear Regulatory Commission ("NRC") a document entitled "Response to Request for Additional Information No.779-5865 Revision 3".

Enclosed is the response to 3 RAIs contained within Reference 1.

Please contact Dr. C. Keith Paulson, Senior Technical Manager, Mitsubishi Nuclear Energy Systems, Inc. if the NRC has questions concerning any aspect of the submittals. His contact information is below.

Sincerely,

Y. Ogata

Yoshiki Ogata,
General Manager- APWR Promoting Department
Mitsubishi Heavy Industries, LTD.

Enclosure:

1. Response to Request for Additional Information No. 779-5865, Revision 3

CC: J. A. Ciocco
C. K. Paulson

Contact Information
C. Keith Paulson, Senior Technical Manager
Mitsubishi Nuclear Energy Systems, Inc.
300 Oxford Drive, Suite 301
Monroeville, PA 15146
E-mail: ck_paulson@mnes-us.com
Telephone: (412) 373-6466

D081
NRO

Enclosure 1

UAP-HF-11259
Docket Number 52-021

Response to Request for Additional Information
No. 779-5865, Revision 3

August, 2011

RESPONSE TO REQUEST FOR ADDITIONAL INFORMATION

08/11/2011

US-APWR Design Certification

Mitsubishi Heavy Industries

Docket No. 52-021

RAI NO.:	**779-5865 REVISION 3**
SRP SECTION:	**09.04.03 – AUXILIARY AND RADWASTE AREA VENTILATION SYSTEM**
APPLICATION SECTION:	**DCD Section 9.4.3**
DATE OF RAI ISSUE:	**7/11/2011**

QUESTION NO.: 09.04.03-14

Post DCD Revision 3 -- Staff follow-up RAI Question to RAI No. 634-4845 Rev. 2 Question No.: 09.04.03-11

To prevent the backflow of Containment air into the controlled and noncontrolled areas of the Auxiliary Building via the containment low volume purge system, the staff requests additional clarification (reference FSAR Figures 9.4.3-1 and 9.4.6-1).

The NRC requests that the applicant provide additional clarification and changes to their response to Question No. 09.04.03-11 regarding the sequence for the containment low volume purge system shutdown and isolation when exhaust from the auxiliary building HVAC system is filtered by the containment low volume purge exhaust filtration unit. The NRC requests that MHI modify further section 9.4.6.2.4.1 to add information to the DCD so that it is clear that the alarm response and the associated procedures will tell the plant operators to secure any in progress containment pressure relief/purge before aligning the auxiliary building HVAC system to the containment low volume purge exhaust filtration unit. Also, recommend the last sentence added to the eighth paragraph of section 9.4.6.2.4.1 be further revised so it is clear on the required sequence, such as, "Before the exhaust from the auxiliary building HVAC system is aligned to the containment low volume purge exhaust filtration unit, the containment low volume purge system containment isolation valve is manually closed and the containment low volume purge supply fan is manually stopped."

ANSWER:

DCD Section 9.4.6.2.4.1 states, in the eighth paragraph, that in the event of a high radiation condition alarm in the MCR for an area served by the auxiliary building HVAC system, operators will manually isolate the affected area normal ventilation and redirect exhaust ventilation airflow through the containment low volume purge exhaust filtration units. The last sentence of the eighth paragraph of section 9.4.6.2.4.1 will be revised to clarify the required sequence for aligning auxiliary building HVAC system exhaust through the containment low volume purge exhaust filtration units, as recommended in the question above, to read: "Before the exhaust from the auxiliary building HVAC system is aligned to the containment low volume purge exhaust filtration unit, the containment low volume purge system containment isolation valve is manually closed and the containment low volume purge supply fan is manually stopped."

Therefore, DCD Section 9.4.6.2.4.1 establishes the required actions in response to a high area radiation condition. As described in DCD Section 13.5, however, operating procedures, including alarm response procedures, are developed by the COL applicant.

Impact on DCD

DCD Revision 3, Section 9.4.6.2.4.1, eighth paragraph, last sentence, will be revised to clarify the required sequence for aligning auxiliary building HVAC system exhaust through the containment low volume purge exhaust filtration units, as follows:

> ~~When~~ **Before** exhaust from the auxiliary building HVAC system is ~~filtered by~~ **aligned to** the containment low volume purge exhaust filtration unit, the containment low volume purge system containment isolation valve is manually closed and the containment low volume purge supply fan is manually stopped.

See Attachment-1 for mark-up DCD Revision 3 Tier 2, page 9.4-43.

Impact on R-COLA

There is no impact on the R-COLA.

Impact on S-COLA

There is no impact on the S-COLA.

Impact on PRA

There is no impact on the PRA.

RESPONSE TO REQUEST FOR ADDITIONAL INFORMATION

08/11/2011

US-APWR Design Certification

Mitsubishi Heavy Industries

Docket No. 52-021

RAI NO.:	**779-5865 REVISION 3**
SRP SECTION:	**09.04.03 – AUXILIARY AND RADWASTE AREA VENTILATION SYSTEM**
APPLICATION SECTION:	**DCD Section 9.4.3**
DATE OF RAI ISSUE:	**7/11/2011**

QUESTION NO.: 09.04.03-15

Post DCD Revision 3 -- Staff follow-up RAI Question to RAI No. 634-4845 Rev. 2 Question No.: 09.04.03-12

Follow up RAI to MHI's response to Part 1)

MHI in Part 1) stated that DCD section 9.4.3.1.2.1 the design basis of the auxiliary building HVAC system includes the requirement to maintain a slightly negative pressure in the controlled areas of the Auxiliary Building to minimize exfiltration from the radiologically controlled areas during normal plant operation and to maintain air flow from areas of low radioactivity to areas of potentially higher radioactivity. MHI further clarified that this requirement is met by controlling exhaust flow rate higher than supply flow rate by approximately 10% and exhausting from areas of potentially higher radioactivity. The applicant is requested to provide additional clarification on how large zones like the auxiliary building that may have a number of higher radiation areas such as a charging pump room are controlled so that these small zones with higher radiation areas will operate at a lower negative pressure relative to the larger auxiliary building zone. How will each of these smaller areas/rooms within the larger auxiliary building ventilation area be properly controlled and flow balanced to ensure that air flow will be from areas of lower radioactivity to areas of higher radioactivity? In addition, how will any interconnected spaces such as those shown on DCD figure 12.3-1 sheets 10 and 13 of 34, which show a connection to the feed water piping areas and the reactor building, be controlled? Please provide additional clarification and information in the DCD on how this will be achieved and maintained to ensure that dose levels due to airborne radioactivity will be maintained consistent with the principles of ALARA and the requirements of 10CFR Part 20.

Follow up RAI to MHI's response to Part 3)

MHI in Part 3) clarified how the GWMS controls gaseous radioactive wastes generated as a result of normal plant operation and AOOs. MHI clarified how the AOOs potentially involving airborne releases can result in high levels in radiation zones V and higher. MHI clarified that these areas are inaccessible with locked doors and positive access controls. They also clarified that the HVAC system is designed to maintain the airflow from normally occupied areas to areas designated radiation zone V and higher. With the locked areas, there are no personnel present at the time of the AOO and in all other accessible areas during normal operation MHI stated that the doses are well below the 10 CFR Part 20 limits. However, MHI did not directly list out the AOOs including the most limiting AOO in their response. It is requested that MHI in the DCD provide a list of the AOOs including the most limiting AOO to ensure that all potential AOOs, like a sampling line break, have been considered including the potential effects on the areas where the AOOs could occur. Please provide additional clarification and information in the DCD on the

specific AOOs, the most limiting AOO and where the AOOs could occur to ensure that dose levels due to airborne radioactivity will be maintained consistent with the principles of ALARA and the requirements of 10CFR Part 20.

ANSWER:

Follow up RAI to MHI's response to Part 1)

The auxiliary building HVAC system is designed to control exhaust fan airflow continuously and automatically at a predetermined value to maintain a slightly negative pressure in the controlled areas within A/B, R/B and AC/B relative to the outside atmosphere as described in DCD Subsection 9.4.3.1.2.1. Within the auxiliary building, areas with higher potential airborne radioactivity levels, such as pump rooms, are provided with individual branch ducts from the main supply and exhaust ducts as shown in DCD Figure 9.4.3-1 or provided with transferred air from the areas with lower potential airborne radioactivity levels (e.g., corridor, passage) and individual branch ducts from main exhaust duct. As indicated in DCD Subsection 9.4.3.2.1, these branch ducts include a balancing damper that is used to balance ventilation flowrate to ensure adequate exhaust from the higher radioactivity areas such that airflow is from low to high radioactivity areas.

The main steam/feedwater piping area is within the R/B uncontrolled area. As described in DCD Subsection 9.4.3, the main steam/feedwater piping area HVAC system provides heating and cooling ventilation for this area. As shown in DCD Figure 9.4.3-1, the auxiliary building HVAC system provides supply and exhaust ventilation for the general R/B uncontrolled areas. The auxiliary building HVAC system maintains a slightly negative pressure in the adjacent R/B uncontrolled areas such that airflow is from the main steam/feedwater piping area, minimizing the potential for infiltration of airborne radioactive contaminants. Similarly for other uncontrolled areas, the auxiliary building HVAC system is designed to maintain airflow from areas of low radioactivity to areas of potentially higher radioactivity as stated in DCD Subsection 9.4.3.1.2.1.

In addition, backdraft dampers are provided in the ventilation duct exhausting uncontrolled areas to prevent backflow from the auxiliary building HVAC system. The backdraft dampers are also provided in the supply duct to uncontrolled areas to prevent backflow when the auxiliary building HVAC system is stopped. DCD Subsection 9.4.3.2.1 will be revised to indicate that backdraft dampers are installed in supply lines to uncontrolled areas and exhaust lines from uncontrolled areas.

Follow up RAI to MHI's response to Part 3)

Auxiliary Building (A/B) HVAC system (ABVS) is designed to maintain appropriate condition in Reactor Building (R/B) and A/B. R/B and A/B contain components and pipes of Process and Post-Accident Sampling System (PSS), Chemical and Volume Control System (CVCS), Residual Heat Removal System (RHRS), Spent Fuel Pit Cooling and Purification System (SFPCS), Gaseous Waste Management System (GWMS), Liquid Waste Management System (LWMS) and Solid Waste Management System (SWMS). These systems work in normal operation including startup and shutdown.

The list of anticipated operational occurrence (AOO) to be considered in ABVS design is shown in Table-1. Assumed AOOs result in release of radioactivity in the building from fuel and primary coolant.

Table-1 AOOs to be considered in ABVS Design

Event		Occurrence area
Postulated Accident	PSS Failure	Not Normally occupied area
AOO	GWMS Failure	Not Normally occupied area
	LWMS Failure	Not Normally occupied area *2
	SWMS Failure	Not Normally occupied area
	CVCS Failure	Not Normally occupied area
	RHRS Failure	Not Normally occupied area
	SFPCS Failure	Not Normally occupied area

*1 "Not Normally occupied area" means area which belong to Radiation Zone IV, V and Higher.

*2 Although part of component in LWMS is in Radiation Zone III, radioactive concentration in such components is low. See paragraph below.

As shown in Table-1, all AOOs to be considered in ABVS design occur in Radiation Zone IV and Higher. As shown in previous response (See reference-1.), ABVS is designed to maintain airflow from areas of lower Radiation Zone to areas of higher Radiation Zone. As a result, air in Radiation Zone IV and higher does not escape to normally occupied area (Radiation Zone III and lower). This design prevents air in high Radiation Zone from spreading into normally occupied area, even during AOO. Therefore, these AOOs are not necessary to be considered in ABVS design.

In addition, parts of Radiation Zone III have tank containing radioactive fluid. Such tanks are Waste Monitoring Tank, Detergent Drain Tank and Detergent Drain Monitor Tank. In case of such tank failure, radioactivity would be released into the building. However, fluids in these tanks are low radioactive concentration.

The released radioactivity into the building in these tank failures is compared with the released radioactivity into the building with airborne radioactive concentration in normal operation (See DCD subsection 12.2.2.). When considering iodine which have a significant impact on dose, airborne radioactive iodine-131 released into the building in normal operation is about 1.0 μCi/min, and airborne radioactive iodine-131 released into the building in Failure of Waste Monitor Tank which has higher iodine concentration than Detergent Drain Tank and Detergent Drain Monitor Tank is about 2.3 μCi/min. These concentrations are derived as below.

<u>Airborne radioactivity release rate in radiation zone III</u>

1.6 [μCi/g] *1 X 2 [lb/day] *2 = 1.0 [μCi/min]

*1 RCS Concentration (See DCD Table 11.1-2.)

*2 RCS Leak Rate (See DCD Table 12.2-60 Sheet 3 of 3.)

<u>Airborne radioactivity release rate by waste monitor tank failure in radiation zone III</u>

0.67 [μCi/g] *1 / 100000 *2 X 90 [gpm] *3 = 2.3 [μCi/min]

*1 Radioactive Concentration in Waste Holdup Tank (See DCD Table 12.2-37.). Waste Holdup Tank is located upstream of Waste Monitor Tank.

*2 Decontamination Factor (See DCD Table 11.2-9 Sheet 1 of 2.).

*3 Waste Demineralizer Design Flow (See DCD Table 11.2-6.)

Both airborne radioactive release rates are comparable level, and airborne radioactive concentration in normal operation is around 3 orders of magnitude less than acceptance criteria and has sufficient margin

to acceptance criteria (See DCD Table 12.2-61 Sheet 6 of 6). Therefore, airborne radioactive concentrations in Waste Monitor Tank Failure meet acceptance criteria.

The limiting AOO of these AOOs is the Gaseous Waste Management System Failure. Since Gaseous Waste Management System contains the largest gaseous radioactivity, Gaseous Waste Management System Failure becomes limiting AOO in terms of airborne radioactivity.

Reference

1. "MHI's Response to US-APWR DCD RAI No.634-4845 Revision 2 (Question No.: 09.04.03-12)" dated October 15, 2010

Impact on DCD

DCD Revision 3, Subsection 9.4.3.2.1, fifth paragraph, will be revised to indicate that backdraft dampers are installed in exhaust lines from uncontrolled areas, as follows:

> ... The fuel handling area is supplied airflow of 21,800 ft^3/min from auxiliary building HVAC system air handling units and exhausts an airflow of 24,000 ft^3/min from this area. The airflow to radiological controlled area is adjusted by the balancing damper located in supply and exhaust duct branch throughout the system. **Backdraft dampers are provided in the ventilation duct supplying and exhausting uncontrolled areas to prevent backflow from the auxiliary building HVAC system.**

See Attachment-1 for mark-up DCD Revision 3 Tier 2, page 9.4-14.

Impact on R-COLA

There is no impact on the R-COLA.

Impact on S-COLA

There is no impact on the S-COLA.

Impact on PRA

There is no impact on the PRA.

RESPONSE TO REQUEST FOR ADDITIONAL INFORMATION

08/11/2011

US-APWR Design Certification

Mitsubishi Heavy Industries

Docket No. 52-021

RAI NO.:	**779-5865 REVISION 3**
SRP SECTION:	**09.04.03 – AUXILIARY AND RADWASTE AREA VENTILATION SYSTEM**
APPLICATION SECTION:	**DCD Section 9.4.3**
DATE OF RAI ISSUE:	**7/11/2011**

QUESTION NO.: 09.04.03-16

Post DCD Revision 3 -- Staff follow-up RAI Question to RAI No. 634-4845 Rev. 2 Question No.: 09.04.03-13

Follow up RAI to MHI's response to Part 1) subparagraph iii.2.

The staff is resubmitting this question based on its review of the applicants response to RAI No. 634-4845 Rev 2 Question No. 09.04.03-13 and of Item 10 of DCD (Revision 3) Tier 1 Table 2.7.5.4-3. The staff noted that MHI did not address subparagraph iii.2 of part 1) of the question. Therefore, the staff resubmits the question and asks MHI to explain why the "negative" value is not specified in ITAAC Table 2.7.5.4-3 line item 10. Verifying that the auxiliary building exhaust fans flow rate for each fan is ≥ 108,000 cfm does not ensure that a negative pressure is maintained throughout all radiological controlled areas. The three exhaust fans are each required to deliver a flow rate of ≥ 108,000 cfm and are each rated at 50% of the required system flow rate. The staff requests that the applicant incorporate into the ITAAC acceptance criteria the differential flow rate value of 10% as specified in the opening sentence of the applicant's response. As an example, on possible approach could be an acceptable acceptance criterion would read similar to:

> "A report exists and concludes that any combination of two-of-three as-built auxiliary building exhaust fans maintain a negative pressure (i.e. relative to their adjacent non-radiological areas) throughout all radiological controlled areas served, by exhausting ≥ 10% greater flow than the system supply flow rate of 196,000 cfm."

These words would ensure, most importantly, that all areas served are maintained at a negative pressure relative to their adjacent non-radiological areas and that the fundamental system design parameters are satisfied.

Follow up RAI to MHI's response to Part 2)

In Part 2 of question 09.04.03-13, the NRC requested that MHI verify that an unmonitored release will not occur under credible worst-case ventilation balance conditions for adjacent building HVAC systems. The concern was for all adjacent buildings including the containment. For example, there is a cross connection point from the containment low and high volume purge system just downstream of the auxiliary building exhaust fans (figure 9.4.3-1). The applicant should address whether it would be possible for the containment low or high volume purge systems to pressurize this VCS line cross connection point during containment purge starting at 2 psig containment pressure. Are the specified fan flow rates based

on 20 inches of water column developed across the fan or a combination of 2 psig plus the 20-inch water column of the fans? What would be the maximum flow rate under those conditions? Also, is the HVCP system flow rate at 30,000 cfm significantly above the margin between one auxiliary building air supply unit and one auxiliary building exhaust fan, could a resulting flow imbalance result in backflow? Does the applicant have adequate design controls in place to ensure the operating duct pressures at this cross connection will be properly balanced? What is the vent ducting pressure rating at this cross connection point? Why are there no backflow preventer dampers at this cross connection point? Is it possible for the flow dampers VAS-AOD-511-S and VAS-AOD-512-S to fail due to flow control transients induced in the control loop by the starting/running of the LVCP or HVCP? Could such conditions described above or the failures or operating overpressure conditions lead to backflow from the containment low or high volume purge system into the Auxiliary Building HVAC system or upset the Auxiliary Building from its slightly negative operating pressure relative to adjacent buildings and the ambient conditions?

In addition, the applicant's response to Part 2 of question 09.04.03-13 included the words "backdraft dampers installed at penetrations between controlled and clean areas prevent ventilation backflow from potentially contaminated areas." The staff notes that Figure 9.4.3-1 does not display these backdraft dampers and DCD Section 9.4.3 "Auxiliary Building Ventilation System" does not discuss the existence of the dampers. The staff requests that the applicant revise both DCD Section 9.4.3 and Figure 9.4.3-1 to include a discussion and representation of these backdraft dampers.

Recommended Follow up RAI to MHI's response to Part 2 and 4

In Parts 2 and 4 of their response to question 09.04.03-13 MHI stated routine ventilation system flow balance testing will need to be performed during the operational phase to ensure that design air flow rates are maintained and to confirm ventilation flow balancing is performed. The staff finds that the changes to the DCD under "Impact on DCD" are not specific enough. The NRC requests that MHI consider revising the DCD changes for section 9.4.3.4.1 to specifically state that the auxiliary building HVAC system ventilation flow balancing will be performed before fuel load and periodically thereafter such that an unmonitored release will not occur under worst-case balance conditions relative to conditions in adjacent buildings and outside atmospheric conditions. The staff also requests that MHI define in section 9.4.3.4.1 the periodicity required for this testing.

Recommended Follow up RAI to MHI's response to Part 5)

In Part 5 of question 09.04.03-13, MHI stated that there is a normally closed valve in the sump pump discharge line that isolates the Turbine Building sump from the Auxiliary Building sump, preventing airflow from the Turbine Building. MHI also stated that the valve would only be opened during pumping, at which time pump discharge pressure would prevent airflow from the Auxiliary Building to the Turbine Building. As a follow up the applicant is requested to provide additional information on the system design and administrative controls. In particular, are there check valves in the sump lines that would also prevent backflow from the Auxiliary Building to the Turbine Building through this sump pathway? Figure 9.3.3.-1 does not show a check valve between the Turbine Building sump discharge and the radiological auxiliary building sump. Without a check valve in this line, could backflow occur from the Auxiliary Building sump to the Turbine Building sump after the pump is secured? In addition, the staff requests detail regarding the administrative controls for the normally closed valve that would only be opened during pumping. If administrative controls, such as locking closed this discharge valve, are to be implemented please describe these additional constraints in the DCD to limit the opportunity for unmonitored releases through this pathway.

ANSWER:

Follow up RAI to MHI's response to Part 1) subparagraph iii.2.

The auxiliary building HVAC system provides conditioned air at air flow rates designed to maintain airborne radioisotopes in normally occupied A/B areas at dose levels "as low as reasonably achievable" and within 10 CFR 20 requirements. During normal operation, the auxiliary building HVAC system exhaust contains insignificant amounts of radioactive material and is discharged to the atmosphere

without filtration, via the plant vent. During normal operating conditions, exfiltration of minimal amounts of this air is expected and represents no significant increase in occupational exposure or offsite dose.

As described in DCD Section 9.4.3.2.1 and prior responses to RAI 634-4845 Question No. 09.04.03-13 referenced by this question, the auxiliary building HVAC system is also designed to maintain a "slight negative pressure" in the A/B areas it services. This negative pressure "minimizes," but does not prevent, exfiltration from radiological controlled areas during normal plant operation. Minimization of exfiltration is accomplished by maintaining auxiliary building HVAC system exhaust flow at a consistently higher flow rate than supply flow. This flow differential assures a negative pressure in the A/B under normal operating conditions with respect to surrounding areas, thus directing air flow from areas of low radioactivity to areas of progressively higher radioactivity. Preoperational testing described in DCD Chapter 14 assures that the ABVS is installed correctly and that air flows are properly balanced.

Thus, MHI will revise US-APWR DCD Revision 3 Table 2.7.5.4-3 ITAAC #10 to indicate that the exhaust flow rate from two operating exhaust fans is ≥216,000 cfm and confirm an air flow balance that maintains a negative pressure by flow differential, as follows:

Design Commitment	Inspections, Tests, Analyses	Acceptance Criteria
10. The auxiliary building HVAC system provides a flow rate **and a flow balance** that maintains a negative pressure in the radiological controlled areas **during normal operation**.	10. Tests and analyses of the as-built auxiliary building HVAC system will be performed.	10. A report exists and concludes that the as-built auxiliary building ~~exhaust fans provide a flow rate~~ **HVAC system maintains exhaust airflow** ~~> 108,000 cfm to~~ **≥216,000 cfm and exhaust airflow greater than or equal to supply airflow, with any two of operating as-built auxiliary building exhaust fans, that** maintain**s** a negative pressure in the radiological controlled areas **under normal operating conditions.**

DCD Section 9.4.3.2.1 will be revised to correct the total exhaust flow from the operation of two ABVS exhaust fans from 208,000 cfm to 216,000 cfm.

Follow up RAI to MHI's response to Part 2)

As shown in attachment-1, flow damper VAS-AOD-513-N will be installed to adjust the ABVS exhaust airflow rate to design flow rate described in DCD Subsection 9.4.3.2.1 regardless of the operation of HVCP and LVCP. HVCP does not operate under 2 psig containment pressure plus the pressure developed across the fan since HVCP operates during the refueling condition. During the operation of LVCP under the condition, the ABVS provides the design exhaust air by the adjustment of the flow damper VAS-AOD-513-N. Therefore, there is no airflow from HVCP and LVCP to ABVS under the condition.

The connection from the containment ventilation system (VCS) low volume and high volume purge exhaust to the auxiliary building ventilation system (ABVS) exhaust duct provides a flowpath to the vent stack as shown on DCD Figure 9.4.3-1. The ductwork for this connection and the ABVS exhaust duct, and the duct from individual areas in the auxiliary building to the VCS low volume purge exhaust filtration unit inlet, is rated for pressure conditions resulting from containment purge operation, including an initial

containment pressure of 2 psig plus the pressure developed across the fans of HVCP and LVCP, since these ducts could be pressurized during purge operation.

Airflow is from the VCS to the vent stack during purge operations, and the duct is sized for maximum system flowrate. There is no backflow to the auxiliary building from the VCS because ABVS exhaust fan discharge isolation dampers are closed for non-operating fans.

The high volume containment purge and low volume containment purge exhaust fans are interlocked with flow dampers VAS-AOD-511-S and VAS-AOD-512-S such that the fans will not start if the dampers are closed. Therefore, there is no potential for backflow to the ABVS from containment purge exhaust due to the closure of these flow dampers.

As indicated in the response to Question No.9.4.3-15, DCD Subsection 9.4.3.2.1 will be revised to describe the backdraft dampers. This level of detail is not shown in the simplified flow diagram in DCD Figure 9.4.3-1.

Recommended Follow up RAI to MHI's response to Part 2 and 4

The DCD provides the design of the ABVS to include balancing dampers in Section 9.4.3 and the pre-operational testing requirements for initial flow balancing of the ABVS in Section 14.2.12.1.99. Pre-operational testing is required to be completed prior to fuel load as described in DCD Section 14.2.1.2.2.

Determination of the required frequency of periodic confirmation of flow balance is the responsibility of the COL applicant.

Recommended Follow up RAI to MHI's response to Part 5)

There are check valves in the sump lines that would prevent backflow from the Auxiliary Building to the Turbine Building through this sump pump discharge pathway. Therefore, there would not be airflow from the A/B to the T/B through the interconnection via the non-radiological sump drain system. This level of detail is not shown in the simplified flow diagram in DCD Figure 9.3.3-1. No specific administrative controls are provided for the normally closed valve in the sump pump discharge line that isolates the Turbine Building sump from the Auxiliary Building sump.

Impact on DCD

US-APWR DCD Revision 3 Tier 1 Table 2.7.5.4-3 will be changed as described in the answer.

US-APWR DCD Revision 3 Tier 2 Subsection 9.4.3.2.1, fifth paragraph, first sentence will be revised as follows;

> "During normal plant operation, the two air handling units and two exhaust fans are placed into operation. The total supply airflow of two air handling units is 196,000 ft^3/min and the total exhaust airflow of two exhaust fans is ~~208,000~~**216,000** ft^3/min."

DCD Figure 9.4.3-1 will be revised as shown in attachment-1.

See Attachment-1 for mark-up DCD Revision 3 Tier 1, page 2.7-218, and Tier 2, pages 9.4-14 and 9.4-79.

Impact on R-COLA

There is no impact on the R-COLA.

Impact on S-COLA

There is no impact on the S-COLA.

Impact on PRA

There is no impact on the PRA.

Table 2.7.5.4-3 Auxiliary Building Ventilation System Inspections, Tests, Analyses, and Acceptance Criteria (Sheet 4 of 4)

Design Commitment	Inspections, Tests, Analyses	Acceptance Criteria	
10. The auxiliary building HVAC system provides a flow rate and a flow balance that maintains a negative pressure in the radiological controlled areas during normal operation.	10. Tests and analyses of the as-built auxiliary building HVAC system will be performed.	10. A report exists and concludes that the as-built auxiliary building ~~exhaust fans provide a flow rate~~ HVAC system maintains exhaust airflow ≥ ~~108,000 cfm to maintain~~ 216,000 cfm and exhaust airflow greater than or equal to supply airflow, with any two of operating as-built auxiliary building exhaust fans, that maintains a negative pressure in the radiological controlled areas under normal operating conditions.	DCD_09.04.03-16 DCD_09.04.03-16
11. ~~Non safety-related ABVS equipment and ductwork, including supports, whose failure could adversely interact with safety-related SSCs meet seismic Category II requirements~~Deleted.	11.i ~~Analysis will be performed to demonstrate that as-built non-safety-related CVVS equipment and ductwork, including supports, does not adversely interact with safety-related SSCs during and after an SSE~~Deleted.	11.i ~~Reports exist and conclude that the as-built non-safety-related ABVS equipment and ductwork, including supports, whose failure could adversely impact safety-related SSCs does not adversely interact with safety-related systems during and after an SSE~~Deleted.	MIC-03-T1-00001
	11.ii ~~Inspection will be performed to verify that the as-built non-safety-related ABVS equipment and ductwork, including supports, are installed in accordance with the configurations specified by the analyses~~Deleted.	11.ii ~~The as-built non safety-related ABVS equipment and ductwork, including supports, whose failure could adversely interact with safety-related SSCs are installed in accordance with the configurations specified by the analyses~~Deleted.	MIC-03-T1-00001

There is no separate spent fuel pool ventilation system. The fuel handling area in the reactor building is serviced by the auxiliary building HVAC system. There are supply and exhaust ductwork branches from the auxiliary building HVAC system that enter into the fuel handing area. The exhaust air duct from the fuel handling area is monitored for airborne radioactivity (Subsection 12.3.4.2.8).

During normal plant operation, the two air handling units and two exhaust fans are placed into operation. The total supply airflow of two air handling units is 196,000 ft^3/min and the total exhaust airflow of two exhaust fans is ~~208,000~~216,000 ft^3/min. Upon energizing the air handling unit, its isolation dampers automatically open. Upon energizing the two exhaust fans, their airflow is continuously and automatically controlled at a predetermined value to maintain a slightly negative pressure in the controlled areas within A/B, R/B, including the fuel handling area, and AC/B to minimize exfiltration from the radiological controlled areas. The fuel handling area is supplied airflow of 21,800 ft^3/min from auxiliary building HVAC system air handling units and exhausts an airflow of 24,000 ft^3/min from this area. The airflow to radiological controlled area is adjusted by the balancing damper located in supply and exhaust duct branch throughout the system. Backdraft dampers are provided in the ventilation duct supplying and exhausting uncontrolled areas to prevent backflow from the auxiliary building HVAC system. DCD_09.04.03-16 DCD_09.04.03-15

In summer, the outside supply airflow is cooled by the air handling unit's chilled water cooling coil. Upon supply air temperature rise, as sensed by thermostats located in the supply air duct, the air handling unit's chilled water control valves allow for an increase in the chilled water flow through the cooling coils.

In winter, the supply air is heated by the air handling unit steam heating coil to maintain the supply air temperature at the design set point. Supplemental heating with local unit heaters or in-duct heaters, that are non-safety related equipment and locally installed, is provided in areas with higher heat loss, due to their proximity to exterior walls.

Airborne radioactivity is monitored inside the exhaust air duct from the fuel handling area, penetration and safeguard component area, R/B controlled area, A/B controlled area, and sampling/laboratory area (AC/B controlled area) (Subsection 12.3.4.2.8). An alarm will be actuated in the MCR when the radiation levels exceed a predetermined value. If this event occurs, the normal supply and exhaust from the affected area is manually isolated, remotely from the MCR, and the exhaust flow is manually diverted, remotely from the MCR, to the containment low volume purge filtration exhaust system (Section 9.4.6) for the following areas: the penetration and safeguard component area, fuel handling area, R/B controlled area, A/B controlled area, and sampling/laboratory area. The airflow from the containment low volume purge exhaust filtration unit exhausts through the vent stack, which also contains radiation monitors. These radiation monitors are used during all modes of operation. This design complies with GDC 64, Monitoring Radioactivity Releases, and GDC 63, Monitoring Fuel and Waste Storage, as indicated in Section 11.5.

This redirects normal exhaust from radiological controlled area to HEPA and charcoal absorber filters in the containment low volume purge system. Thereby, this system arrangement meets the requirements of GDC 61 for normal plant conditions.

The containment penetration and the containment isolation valves are constructed of fire rated material and as a fire barrier and are equivalent to any fire rated damper. This configuration will prevent the spread of fire from on fire area to another fire area.

This ventilation system contains ductwork in the auxiliary building and reactor building and there will be some penetration through fire barriers. Therefore, fire dampers are installed where ductwork penetrates a fire rated barrier.

Each air handling unit consists of, in the direction of airflow, a low efficiency filter, a high efficiency filter, an electric heating coil, a chilled water cooling coil, and a supply fan. Each unit is sized for 100% capacity. Outside air is drawn and conditioned by the air handing unit and discharged into the containment through the containment low volume purge system penetration.

The supply air to the containment is dehumidified and tempered to minimize the condensation on the cooling coils for the containment fan cooler units and the CRDM cooling unit, and on the supply air duct inside the containment. The capacity of the heating and cooling coils is determined by the ambient design outside dry and wet bulb temperature condition.

Each containment low volume purge exhaust filtration unit consists of, in the direction of airflow, a high efficiency filter, an electric heating coil, a HEPA filter, a charcoal adsorber, a high efficiency filter, and an exhaust fan. Each unit is sized for 100% capacity. The containment air is drawn through the containment low volume purge system penetration by the exhaust filtration unit and discharged to the atmosphere through the plant vent stack.

These containment low volume purge exhaust filtration units are cross connected to the auxiliary building ventilation system (Subsection 9.4.3.2.1) with the following areas, fuel handling area, penetration and safeguard component area, and controlled area of the reactor building, auxiliary building, and access building. Radiation monitors in the normal exhaust ducts (Subsection 12.3.4.2.8) from these areas will alarm in the MCR upon detecting high radiation. In this event, operators will manually isolate normal ventilation to the impacted area, and redirect exhaust airflow to these containment low volume purge exhaust filtration units. This minimizes the potential spread of radioactive contamination for the areas serviced by the auxiliary building HVAC system. ~~When~~Before exhaust from the auxiliary building HVAC system is ~~filtered by~~ aligned to the containment low volume purge exhaust filtration unit, the containment low volume purge system containment isolation valve is manually closed and the containment low volume purge supply fan is manually stopped. DCD_09.04.03-14

The containment low volume purge system meets the GDC 60 and 61 requirements based on compliance with RG 1.140 and control of radioactive material releases to environment. However, based on the results of the fuel handling accident analysis presented in DCD Section 15.7.4 with no credit given for any filtration of released radionuclides, the calculated offsite doses remain well within the guideline dose limit values of 10 CFR 50.34.

The capacity of the containment low volume purge system is sized to maintain acceptably low levels of radioactivity, including noble gases, during normal plant operation.

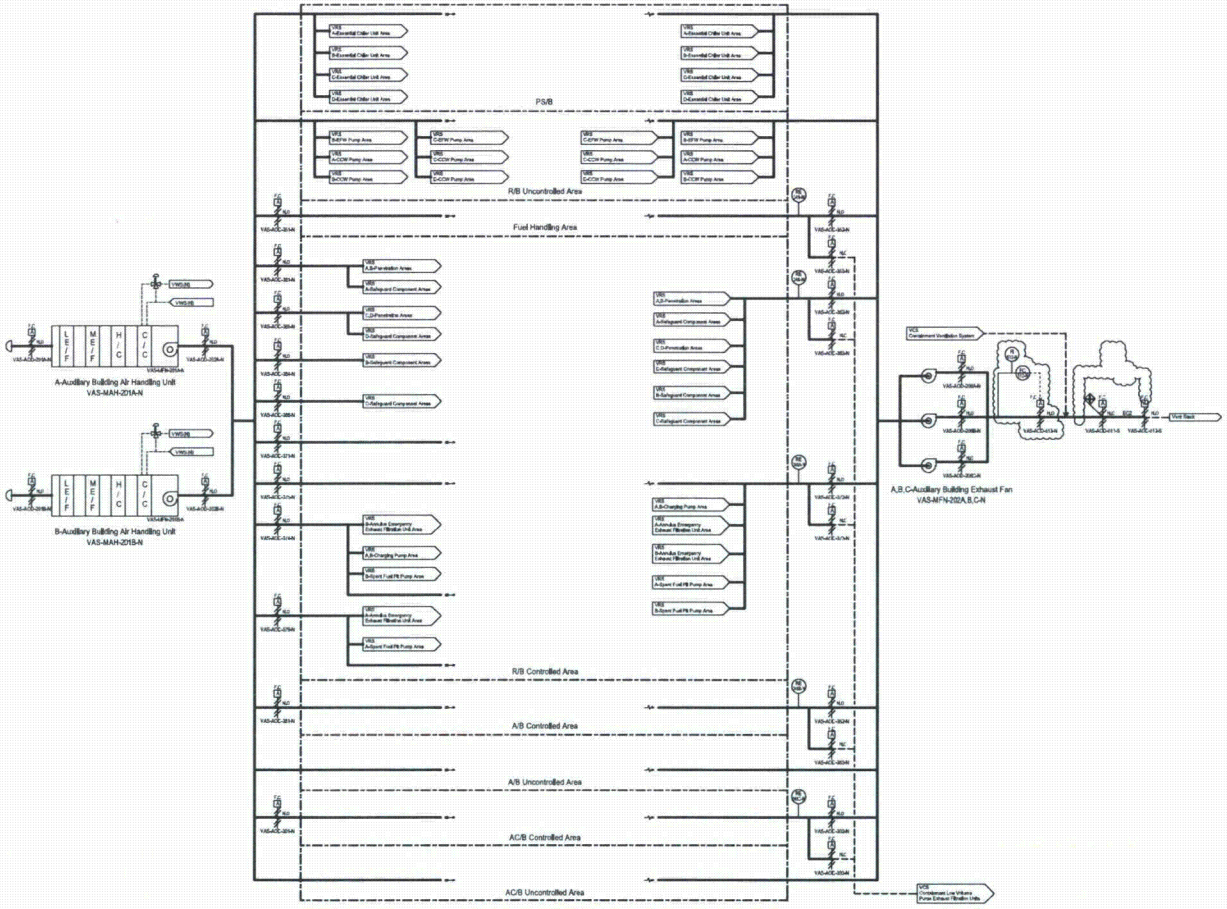

DCD_09.04.03-16

Figure 9.4.3-1 Auxiliary Building HVAC System Flow Diagram