MITSUBISHI HEAVY INDUSTRIES, LTD.
TOKYO, JAPAN

August 11, 2011

Document Control Desk
U.S. Nuclear Regulatory Commission
Washington, DC 20555-0001

Attention: Mr. Jeffery A. Ciocco

Docket No. 52-021
MHI Ref: UAP-HF-11257

Subject: Amended MHI's Response to US-APWR DCD RAI No. 107-1293 Revision 0 (SRP 03.09.04)

Reference: 1) "Request for Additional Information No. 107-1293 Revision 0, SRP Section: 03.09.04 – Control Rod Drive Systems, Application Section: 3.9.4," dated 11/24/2008
2) "MHI's Response to US-APWR DCD RAI No. 107 Revision 0," MHI's Ref: UAP-HF-08278," dated December 19, 2008
3) "MHI's Amended Response to US-APWR DCD RAI No. 107-1293 Revision 0, UAP-HF-09273," dated 5/29/2009

With this letter, Mitsubishi Heavy Industries, Ltd. ("MHI") transmits to the U.S. Nuclear Regulatory Commission ("NRC") documents entitled "Amended Response to Request for Additional Information No. 107-1293, Revision 0"

Enclosed is the response to the Question No. 1293-01, 1293-06 and 1293-07 of the RAI (Reference 1).

This response amends the previously transmitted answers submitted under MHI Reference UAP-HF-09273 on May 29, 2009 (Reference 3) in order to update on the maximum CRDM deflection due to the LOCA and seismic loads and to clarify the description in the Attachment-1.

As indicated in the enclosed materials, this submittal contains information that MHI considers proprietary, and therefore should be withheld from public disclosure pursuant to 10 C.F.R. § 2.390 (a)(4) as trade secrets and commercial or financial information which is privileged or confidential. A non-proprietary version of the document is also being submitted with the information identified as proprietary redacted and replaced by the designation "[ ]".

This letter includes a copy of the proprietary version (Enclosure 2), a copy of the non-proprietary version (Enclosure 3), and the Affidavit of Yoshiki Ogata (Enclosure 1) which identifies the reasons MHI respectfully requests that all materials designated as "Proprietary" in Enclosure 2 be withheld from public disclosure pursuant to 10 C.F.R. § 2.390 (a)(4).

Please contact Dr. C. Keith Paulson, Senior Technical Manager, Mitsubishi Nuclear Energy Systems, Inc. if the NRC has questions concerning any aspect of the submittals. His contact information is provided below.

D081
NRO

Sincerely,

Y. Ogata

Yoshiki Ogata,
General Manager- APWR Promoting Department
Mitsubishi Heavy Industries, LTD.

Enclosures:

1. Affidavit of Yoshiki Ogata

2. Amended Response to Request for Additional Information No. 107-1293, Revision 0 (Proprietary)

3. Amended Response to Request for Additional Information No. 107-1293, Revision 0 (Non-proprietary)

CC: J. A. Ciocco
C. K. Paulson

Contact Information
C. Keith Paulson, Senior Technical Manager
Mitsubishi Nuclear Energy Systems, Inc.
300 Oxford Drive, Suite 301
Monroeville, PA 15146
E-mail: ck_paulson@mnes-us.com
Telephone: (412) 373-6466

Enclosure 1

Docket No. 52-021
MHI Ref: UAP-HF-11257

MITSUBISHI HEAVY INDUSTRIES, LTD.

AFFIDAVIT

I, Yoshiki Ogata, state as follows:

1. I am General Manager, APWR Promoting Department, of Mitsubishi Heavy Industries, LTD ("MHI"), and have been delegated the function of reviewing MHI's US-APWR documentation to determine whether it contains information that should be withheld from public disclosure pursuant to 10 C.F.R. § 2.390 (a)(4) as trade secrets and commercial or financial information which is privileged or confidential.

2. In accordance with my responsibilities, I have reviewed the enclosed document entitled "Amended Response to Request for Additional Information No. 107-1293, Revision 0", dated August 2011, and have determined that portions of the document contain proprietary information that should be withheld from public disclosure. All pages contain proprietary information as identified with the label "Proprietary" on the top of the page, and the proprietary information has been bracketed with an open and closed bracket as shown here "[ ]". The first page of the document indicates that all information identified as "Proprietary" should be withheld from public disclosure pursuant to 10 C.F.R. § 2.390 (a)(4).

3. The information identified as proprietary in the enclosed documents has in the past been, and will continue to be, held in confidence by MHI and its disclosure outside the company is limited to regulatory bodies, customers and potential customers, and their agents, suppliers, and licensees, and others with a legitimate need for the information, and is always subject to suitable measures to protect it from unauthorized use or disclosure.

4. The basis for holding the referenced information confidential is that it describes the unique design parameters developed by MHI for the Control Rod Drive Mechanism.

5. The referenced information is being furnished to the Nuclear Regulatory Commission ("NRC") in confidence and solely for the purpose of information to the NRC staff.

6. The referenced information is not available in public sources and could not be gathered readily from other publicly available information. Other than through the provisions in paragraph 3 above, MHI knows of no way the information could be lawfully acquired by organizations or individuals outside of MHI.

7. Public disclosure of the referenced information would assist competitors of MHI in their design of new nuclear power plants without incurring the costs or risks associated with the design of the subject systems. Therefore, disclosure of the

information contained in the referenced document would have the following negative impacts on the competitive position of MHI in the U.S. nuclear plant market:

A. Loss of competitive advantage due to the costs associated with the development of the unique design parameters.

B. Loss of competitive advantage of the US-APWR created by the benefits of the Control Rod Drive Mechanism operation.

I declare under penalty of perjury that the foregoing affidavit and the matters stated therein are true and correct to the best of my knowledge, information and belief.

Executed on this 11th day of August, 2011.

Y. Ogata

Yoshiki Ogata,
General Manager- APWR Promoting Department
Mitsubishi Heavy Industries, LTD.

Enclosure 3

UAP-HF-11257
Docket No. 52-021

Amended Response to Request for Additional Information
No. 107-1293, Revision 0

August 2011

(Non-Proprietary)

RESPONSE TO REQUEST FOR ADDITIONAL INFORMATION

08/11/2011

US-APWR Design Certification
Mitsubishi Heavy Industries
Docket No. 52-021

RAI NO.:	**NO. 107-1293 REVISION 0**
SRP SECTION:	**03.09.04 – CONTROL ROD DRIVE SYSTEMS**
APPLICATION SECTION:	**3.9.4**
DATE OF RAI ISSUE:	**11/24/08**

US-APWR Design Certification- 03.09.04, Control Rod Drive Systems (CRDS)
[Review performed against revision 0 of the US-APWR DCD Tier 2.]

QUESTION NO. : RAI 1293-01

Include reference(s) that documents control rod drive mechanism (CRDM) qualification to operate in the reactor pressure vessel (RPV) environment. Based on the nature of this reference, provide one of the following for review:

1. For a new series of tests unique to the US-APWR CRDM, provide for review an operability assurance program for the US-APWR CRDM that covers all the items contained in the guidance in SRP Section 3.9.4, Part I, Item 4, or

2. If a specific previous testing program that has been approved by the USNRC is referenced, such as for the L-106A CRDM, provide the following additional information for review:

a. Describe differences between the US-APWR and the previous design, such as the L-106A CRDM and discuss their effects on the applicability of the previous operability tests to the US-APWR CRDM. US-APWR DCD Tier 2, Section 3.9.4.1.1 (page 3.9-56) states that the US-APWR CRDM design is improved by (1) butt welding the CRDM latch housing to the CRDM nozzle on the reactor vessel closure head and (2) applying a chrome carbide coating to the latch arms.
b. Identify any differences in the operating conditions, such as the weight of the rod control cluster assembly (RCCA) and loads imposed by hydrodynamic forces through the RCCA to the CRDM, and discuss their effects on the applicability of the previous tests to the US-APWR CRDS. US-APWR DCD Tier 2, Section 1.2.1.5.1.1 (page 1.2-11) states that the active fuel length of the US-APWR will be increased from 12 to 14 ft as compared to the current Mitsubishi-APWR design.

Therefore, the rod control cluster assembly (RCCA) of the US-APWR may be heavier than in previous designs, and the increased weight may affect functionality and wear differently than in previous tests. US-APWR DCD Tier 2, Section 1.5.2.1 (page 1.5-1) indicates that there are changes in the reactor internals which may alter flow loads from those in previous designs. US-APWR DCD Tier 2, Section 4.3.4 (Page 4.3-27) states there the number of fuel assemblies has been increased to 257 from previous designs.
c. Compare the design LOCA plus SSE loads for the US-APWR CRDS to the loads that were used in the previous design verification tests.
d. Provide the basis for the 60-year lifetime for the CRDM internals. The design lifetime for the L-106A CRDM was 40 years. US-APWR DCD Tier 2, Section 3.9.4.2.1 (Page 3.9-60) states that the design life for the US-APWR CRDM is 60 years.

General Design Criteria (GDC) 2, 26, 27, and 29, require that the CRDS be designed to withstand the effects of an earthquake, and be designed with appropriate margin to assure its functionality under conditions of normal operation, anticipated operational occurrences, and the postulated accident conditions. The guidance in USNRC Standard Review Plan (SRP), Section 3.9.4, Part I **AREAS OF REVIEW,** Item 4 (page 3.9.4-3) states that a review of plans for the conduct of an operability assurance program or that references previous test programs or standard industry procedures for similar apparatus is performed. The guidance in USNRC Standard Review Plan (SRP), Section 3.9.4, Part III **REVIEW Procedures,** Item 1 (page 3.9.4-8) states that, "The objectives of the review are to determine...that suitable life cycle testing programs have been utilized to prove operability under service conditions".

ANSWER:

Review option 2 is applicable, as the design and operating conditions of the US-APWR CRDM are compared with that of the previously tested L-106A CRDM.

The CRDM for the US-APWR design is based on the L-106A type CRDM, which has been used in many operating plants in the USA and Japan. CRDMs for the US-APWR have incorporated two design improvements. As noted by question RAI 1293-01, the US-APWR design utilizes butt welding instead of a threaded connection and canopy seal weld to assure an extremely low probability of leakage, and chrome carbide coating is applied on tip of the latch arms where it engages the control rod drive rod to improve resistance to wear.

Butt welding design is used in both USA and Japanese plants, and chrome carbide coating is used in Japanese plants. Applicability of the US-APWR improved design features is described below. The structural integrity of the pressure housing under loss of coolant accident (LOCA) coincident with safe shutdown earthquake (SSE) conditions was reported to the NRC at the end of February, 2011 by MUAP-09009-P/NP (R1) "Summary of Stress Analysis Results for the US-APWR Control Rod Drive Mechanism."

a. Describe differences between the US-APWR and the previous design, such as the L-106A CRDM, and discuss their effects on the applicability of the previous operability tests to the US-APWR CRDM.

   (1) Latch Assembly

   The design of the US-APWR CRDM latch assembly is the same as the previous L-106A type CRDM, except the chrome carbide coating on the latch arms to improve wear resistance. The latch assembly is shown in Figure 1. This design change does not affect operability, since

the thickness of the chrome carbide coating is thin enough compared with the clearance between the latch tip and the groove of the drive rod.

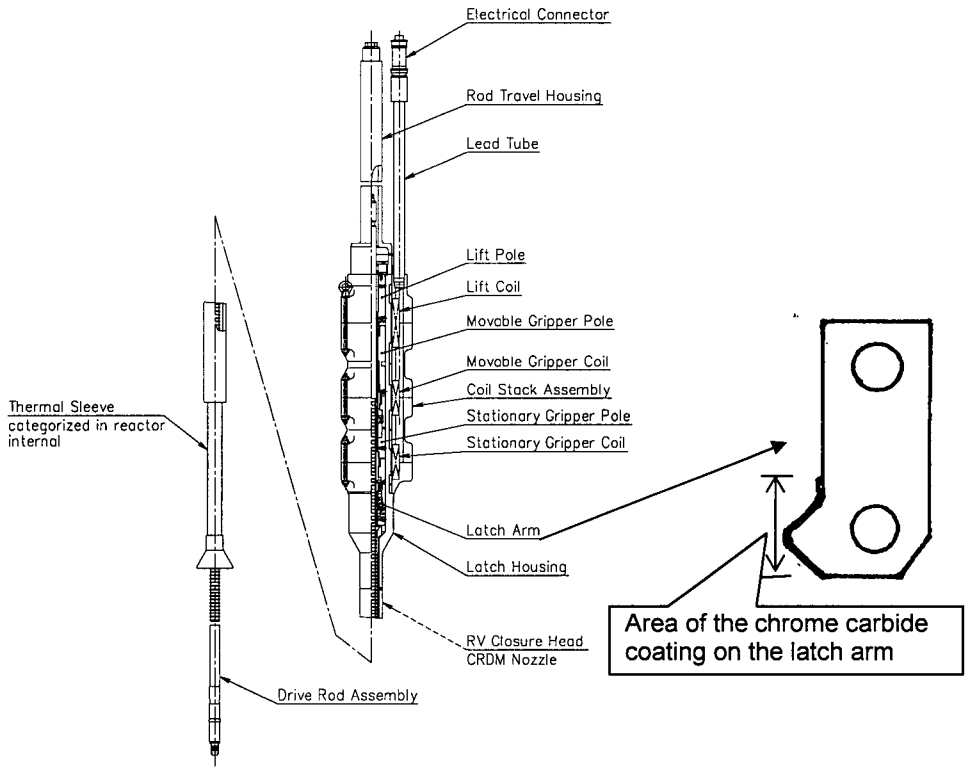

Figure 1 Applied Area of the Chrome Carbide Coating

(2) Pressure Housing

The US-APWR CRDM and previous CRDM pressure housings are shown in Figure 2 to illustrate three areas of design improvements for the cap, rod travel housing and latch housing connections. The previous CRDM design connections of the cap, rod travel housing and latch housing are threaded and canopy seal welded. For the US-APWR CRDM pressure housing, the cap and rod travel housing is machined from one piece of material, and the latch housing and CRDM adapter is also machined from one piece of material. The pressure housing consists of a rod travel housing and a latch housing, both of which are butt welded. The latch housing is butt welded to a CRDM nozzle of the reactor vessel (RV) head. This improved design results in an extremely low probability of primary coolant system leakage. This design change does not affect operability, because interface condition between the latch housing and the latch mechanism is not changed.

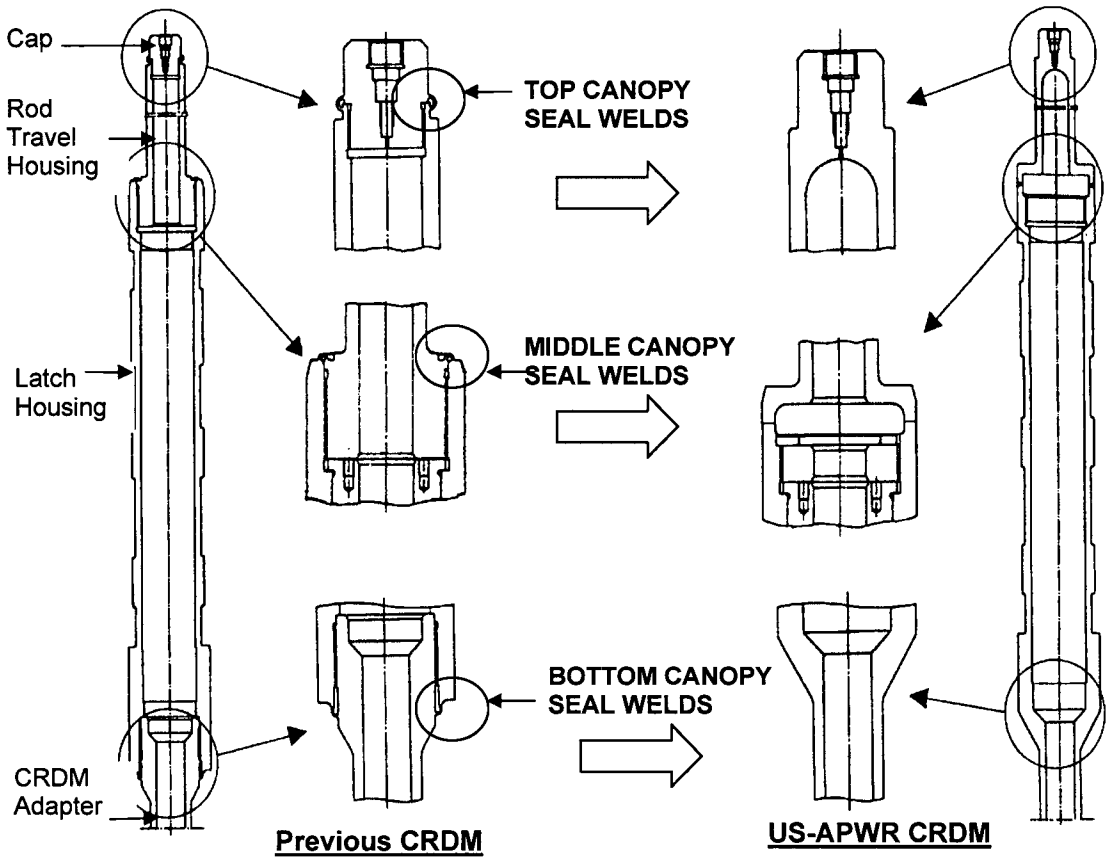

Figure 2 Comparison Sketch Between Previous CRDM and US-APWR CRDM

(3) Drive Rod Assembly

The length of the US-APWR drive rod is extended from the previous design to accommodate the 14-ft fuel and the larger size of the RV. The weight of the drive rod is increased, but operability is maintained, because the effect is small enough. Please see answer b (3) and d.

(4) Coil Stack Assembly

The US-APWR coil stack assembly design is same as previous design.

b. Differences and discussion of effects on operability

(1) Without canopy seal design of the pressure housing

The interface between the latch mechanism and the latch housing is not changed. Therefore this design change does not affect operability.

(2) Chrome carbide coating on the tip of the latch arm

Thickness of the chrome carbide coating on the latch arm is [ ] mils, which is thin enough compared with the approximately [ ] inch clearance between the latch tip and groove of the drive rod. Therefore, chrome carbide coating does not affect operability.

(3) Extension of the drive rod

Drive line weight of the US-APWR is [ ] lbs ([ ] kg), which is about a 10 % increase from current 4 loop drive line weight. This weight increase is within the tested capability of the CRDM noted in Reference 1.

(4) Plant operating conditions

Plant operating conditions are described in DCD Table 4.4-1.

Pressure of the primary coolant water of US-APWR is the same as current 4 loop plants. Temperature and core average coolant velocity of US-APWR are slightly lower than current 4 loop plants.

Hydrodynamic forces in the reactor are upward forces, such as a flow force in the core region, which act in opposite direction of the drive line weight. The verification test (Reference 1) was conducted in high pressure and high temperature water, however the core flow is not simulated in order to provide a conservative test. The effect of decreasing core average coolant velocity is covered by the verification test.

c. Effect of LOCA and SSE loads

Effect of LOCA and SSE loads is verified by comparison between the estimated deflection of the pressure housing and the allowable limit described in DCD Tier 2, Subsection 3.9.4.3. In case that it cannot be satisfied to suppress the response displacement to 1.18 in. or less without middle seismic support for all the seismic conditions of DCD, the CRDM middle seismic support is applied. Estimated deflection of the CRDM pressure housing is [ ] in at Level D condition which is in the allowable limit, 1.18 in. Stress analysis results of the pressure housing are in the allowable limit which is reported to NRC by MUAP-09009-P/NP (R1) "Summary of Stress Analysis Results for the US-APWR Control Rod Drive Mechanism."

d. The bases for assuring the 60 year design life for the US-APWR CRDM are described below.

(1) The stress and fatigue strength of the pressure boundary is evaluated by application of design transients covering 60 years of expected plant life. The results were reported to NRC by MUAP-09009-P/NP (R1) in February 2011.

(2) The integrity of CRDM latch mechanism was confirmed by the endurance test (Reference1). The test was conducted by using a 12 foot drive line CRDM with chrome carbide coating. The drive line weight used in this test was 324 lbs (147 kg), which is slightly heavier than the US-APWR drive line weight of [ ] lbs ([ ] kg), and the functionality was

confirmed to ten million steps. The required step numbers of a 40 year life time is two and one-half million steps. Therefore, a ten million step endurance test is conservatively bound to be enough for the 60 year design life time (Reference 1).

(3) The coil stack assembly and drive rod assembly are not required to have a 60 year operating time. These assemblies can be replaced during the life of the plant.

Reference 1: Improvement of CRDM Durability for PWR Plant, Mitsubishi Nuclear Technology Report No. 54, 1989.

Impact on DCD

There is no impact on DCD Rev.3 since RAI 107-1293 was already incorporated into Revision 3 of the DCD.

Impact on R-COLA

There is no impact on the R-COLA.

Impact on S-COLA

There is no impact on the S-COLA.

Impact on PRA

There is no impact on the PRA.

RESPONSE TO REQUEST FOR ADDITIONAL INFORMATION

08/11/2011

US-APWR Design Certification

Mitsubishi Heavy Industries

Docket No. 52-021

RAI NO.:	**NO. 107-1293 REVISION 0**
SRP SECTION:	**03.09.04 – CONTROL ROD DRIVE SYSTEMS**
APPLICATION SECTION:	**3.9.4**
DATE OF RAI ISSUE:	**11/24/08**

QUESTION NO. : RAI 1293-06

Provide for review the basis of the 1.18-inch allowable rod travel housing deflection during the seismic event in US-APWR DCD Tier 2, Section 3.9.4.3 (page 3.9-62), and how it has been quantified by analysis that the rod control cluster assembly (RCCA) will be inserted into the core at this deflection.

General Design Criterion (GDC) 2, as it relates to the CRDS, requires that the CRDS be designed to withstand the effects of an earthquake. The guidance in USNRC Standard Review Plan (SRP), Section 3.9.4, Part I **AREAS OF REVIEW,** Item 1 (page 3.9.4-2) states that, "The descriptive information, including design criteria...is reviewed to permit an evaluation of the adequacy of the system to perform its mechanical function properly."

ANSWER:

The design allowable rod travel housing deflection of 1.18 inches (30mm) during seismic event was qualified by the rod insertion test. In this test, RCCA insert-ability was demonstrated up to CRDM deflection of [ ] inches ([ ] mm). The design allowable deflection is set to 1.18 inches (30mm) conservatively. Summary of the rod insertion test is shown in Attachment-1.

The maximum deflection of the rod travel housing due to the LOCA and seismic loads is [ ] at Level D condition which was obtained by the dynamic finite element method analysis. And then stress analyses for CRDM pressure housing were carried out using the LOCA and seismic loads. The stress analysis results were provided to NRC by MUAP-09009-N/NP (R1) in February 2011.

Impact on DCD

There is no impact on the DCD.

Impact on R-COLA

There is no impact on the R-COLA.

Impact on S-COLA

There is no impact on the S-COLA.

Impact on PRA

There is no impact on the PRA.

RESPONSE TO REQUEST FOR ADDITIONAL INFORMATION

08/11/2011

US-APWR Design Certification

Mitsubishi Heavy Industries

Docket No. 52-021

RAI NO.:	**NO. 107-1293 REVISION 0**
SRP SECTION:	**03.09.04 – CONTROL ROD DRIVE SYSTEMS**
APPLICATION SECTION:	**3.9.4**
DATE OF RAI ISSUE:	**11/24/08**

QUESTION NO. : RAI 1293-07

Include the criteria used for CRDM operational capability, including the margin, following exposure to the combined effects of a LOCA and an SSE.

General Design Criteria (GDC) 2 and 27, as they relate to the CRDS, require that the CRDS be designed to withstand the effects of an earthquake, and be designed with appropriate margin to assure its functionality under conditions of postulated accident conditions. The guidance in USNRC Standard Review Plan (SRP), Section 3.9.4, Part **I AREAS OF REVIEW,** Item 1 (page 3.9.4-2) states that, "The descriptive information, including design criteria, testing programs,...is reviewed to permit an evaluation of the adequacy of the system to perform its mechanical function properly."

ANSWER:

The CRDM safety function of scram capability is confirmed by limiting the maximum deflection of the rod travel housing due to a LOCA and SSE to less than 1.18 inch.

Estimated deflection of the CRDM pressure housing is [ ] in at Level D condition which is in the allowable limit, 1.18 in.

Impact on DCD

There is no impact on the DCD.

Impact on R-COLA

There is no impact on the R-COLA.

Impact on S-COLA

There is no impact on the S-COLA.

Impact on PRA

There is no impact on the PRA.

Summary of the Control Rod Drop Function Test Results in Japan

1. Introduction

An important safety function of the control rod drive mechanism (hereinafter called CRDM) is to ensure that the control rods, under gravity, can be dropped into the core. Allowable displacement during seismic event in the US-APWR DCD Tier 2, Section 3.9.4.3 is 1.18 inches. This value qualified by the rod insertion test. In this test, a rod control cluster assemblies (hereinafter called RCCA) insert-ability was demonstrated up to CRDM deflection of [ ] inches ([ ] mm). Design allowable deflection is set to 1.18 inches (30mm) conservatively.

This attachment summarizes the 12-ft fuel assembly control rod drop test results under sinusoidal wave vibration conditions. The applicability of the results to US-APWR plants is based on the reasoning that the test model having a shorter drive-line length 14ft fuel assembly results in a smaller curvature against the corresponding lateral displacement, thereby generating a higher drag force than the 14-ft fuel assembly driveline during the control rod drop

2. Purpose

Purpose of this attachment is to provide RCCA insert-ability with vibration amplitude of CRDM pressure housing.

3. Test Condition

3.1. Test model

Figure-1 shows the rod drop test model of drive-line components in a single channel, the L-106A type CRDM, the rod control cluster assembly guide tube (hereinafter called GT) and the fuel assembly (hereinafter called FA) for 17 x 17 type 12-ft plants. Also shown for comparison are the 14-ft fuel assembly drive-line plant conditions. The test modeling conditions are shown in Table-1. For the test models, the same scale and material of the CRDM and GT as actual plant were used. In addition, the same scale and material of the RCCA and FA as actual plant were applied except to use the alternate materials with the equal weight for the absorber in the RCCA and the Uranium in the FA.

Table-2 shows comparisons between the test condition and the actual plant conditions, and Table-3 shows their effect. The test was conducted under the condition in water but not at full flow conditions which made the fluid drag forces smaller, but the buoyancy and dynamic viscosity of water made the drag forces larger at room temperature than those during normal operation. However, These effect is enough small comparing with the weight of the RCCA and the CRDM drive rod which is approximately [ ] lbs.

Test equipment is shown in Figure-2. The GT and FA were placed in a test vessel with support plates corresponding to an upper core support plate, an upper core plate and a lower core plate. In addition, CRDM was placed on the test vessel, and their interior (in the test vessel and the CRDM) was filled with the water.

Vibration actuators were installed at four areas: the upper portion of the CRDM, the middle portion of the CRDM which is at the top of the latch housing, the middle portion of the test vessel which is located at the upper core support plate and lower portion of the test vessel which is located at the lower core plate. When the test was conducted for the CRDM without the middle seismic support, the actuator in the middle portion of the CRDM was not connected.

Measurement items and locations are shown in Figure-2. The displacement of each component was calculated by integrating its measured acceleration. In addition, the control rod insertion time was measured by the variation of the electric current dependent on the dropping speed of the drive rod connected to the RCCA, which generates the electric current by moving the CRDM drive rod with the same device as used for the actual plant (rod position indicator).

The CRDM strain measurements are performed, but its results were omitted in this Attachment because they are reference data to confirm vibration frequencies and monitoring to prevent the failure of the test modeling.

3.2. Test procedure

At first, the entire drive-line was vibrated by the same acceleration with predominant natural frequencies of components to be evaluated. When it was obtained the target amplitude, the insertion time was measured with a rod position indicator (hereinafter called RPI) by dropping the RCCA with the drive rod of CRDM from all withdrawal positions to all insert positions. The drop of the CRDM drive rod moved iron base materials through the center of the coil installed to the RPI, which generated the electricity at the coil part of the RPI. Higher speed of the CRDM drive rod generates the greater electric current. The velocity change from the beginning of the control rod drop to slowdown after inserting it into the dashpot of the control rod guide thimble for FA could be identified by measuring the current generated at the PRI coil.

Vibration input acceleration was adjusted to up to the displacement shown in Table-4. For example, when a test was conducted to obtain the amplitude of CRDM displacement at the second actuator from the top of the CRDM without a middle seismic support of 1.18 inch (30 mm), the entire drive-line was vibrated by acceleration with CRDM natural frequencies to obtain the target displacement.

The displacement of each component was calculated according to the following equation based on the acceleration and vibration frequencies.

$$X=Acc/(2\pi f)^2$$

Where

X: Displacement

Acc: Acceleration

f: Dominant Frequency

3.3. Acceptance Criteria

a. Control rods shall be inserted to the bottom of stroke.

4. Test Results

From the results of the testing, maximum displacements of CRDM is shown in Figure-3. Each figure shows the time-history response acceleration, the time-history vibration acceleration, and excited volts of the rod position indicator, beginning at the top.

The CRDM middle seismic support was installed to constrain the CRDM displacement under extremely large seismic events based on Japanese seismic requirements. The middle seismic support was not installed because seismic force for US-APWR is smaller than that for Japan. The CRDM middle seismic support placed on the CRDM coil stack assembly was one of the vibration points in this test, if the middle seismic support is applied.

Figure-3 shows the condition without the CRDM middle seismic support. The control rod drop test was conducted with maximum displacement of CRDM, [ ] inch ([ ] mm) to confirm that the control rods can be inserted into the bottom position.

In this test, the components other than the CRDM, the effect on the rod drop function was demonstrated. The summary of the test results were shown below for reference data.

Maximum GT top displacement of up to [ ] inch ([ ] mm) confirmed that the control rods can be dropped under the condition and they can be inserted into the bottom position.

Maximum FA displacement of up to [ ] inch ([ ] mm) confirmed that the control rods can be dropped under the condition and they can be inserted into the bottom position.

The test to confirm proof strength of 12-ft drive-line CRDM and control rod drop function under extremely large seismic events was conducted by Japan Nuclear Energy Safety organization (JNES) from 2004 to 2005. The test result confirmed that the control rods can be inserted even under the condition with a FA displacement of approximate 1.77 inch (45mm) and buckling of fuel grids.

5. Applicability for Seismic Condition

In this test, a sinusoidal wave vibration was applied to the control rod drive-line components, instead of the actual seismic acceleration input. The test with a sinusoidal wave vibration of component frequencies was conducted under the condition with continuous maximum displacements, and is considered to be more conservative than the actual seismic wave excitation condition because the larger drag force was continually applied for which case of sinusoidal vibration condition. The control rod drop function was maintained within the response displacement of the drive-line components that was confirmed in this test.

Criterion of the CRDM displacement is set to 1.18 inch (30mm) conservatively.

As described in Introduction, each component for the 12-ft core plants has a shorter drive-line length, the lower degree of flexure, and the higher drag force against the control rod drop than that for the 14-ft core plants.

Therefore, the criterion for the US-APWR based on the test results of the 12-ft core drive-line components is conservative.

Table-1 Differential Points between the Test Model and Actual Components

	Test Model	Actual Plant Type	
Component	Simulating 12-ft Plant	12-ft Drive-line	US-APWR (14-ft Drive-line)
RCCA	17x17	17x17	17x17
CRDM Drive Rod	L-106A	L-106A	L-106A (Increased 2-ft)
Upper GT Lower GT	Same as 12-ft Same as 12-ft	12-ft Core Type 12-ft Core Type	(Increased 1-ft) Same as 12-ft
Fuel Assy and Array	Same as 12-ft (Equivalent Weight)	17x17 12-ft Core Type	17x17 (Increased 2-ft)
RPI Coil	Same as 12-ft	12-ft Core Type	(Increased 2-ft)

Table-2 Differential Points between the Test Condition and 12-ft and 14-ft Core Plant Condition

Condition	Differential Points			Effect
	Test	Actual Plant 12-ft Core	US-APWR (14-ft Core)	
Temperature				
Pressure				
Coolant				

Table-3 Effect of Differences between the Test Conditions and 12-ft and 14-ft Core Plant

	Property Value			Difference from Actual Plants	Effect on Drag Force*
	Test	Actual 12-ft Core Plant	US-APWR (14-ft Core Plant)		
Buoyancy					
Fluid Frictional Force					
Natural Frequency					
Gap					
Fluid Drag Force					

* Effect on drag force is meaning the test condition is increase or decrease drag force compared with actual plant condition.

Table-4 Maximum Amplitude of Displacement of each Components in the Vibration Test

Component	Displacement by Sinusoidal Wave Vibration
CRDM (No Middle Seismic Support Condition)	[ ]
GT (Upper GT)	[ ]
FA	[ ]

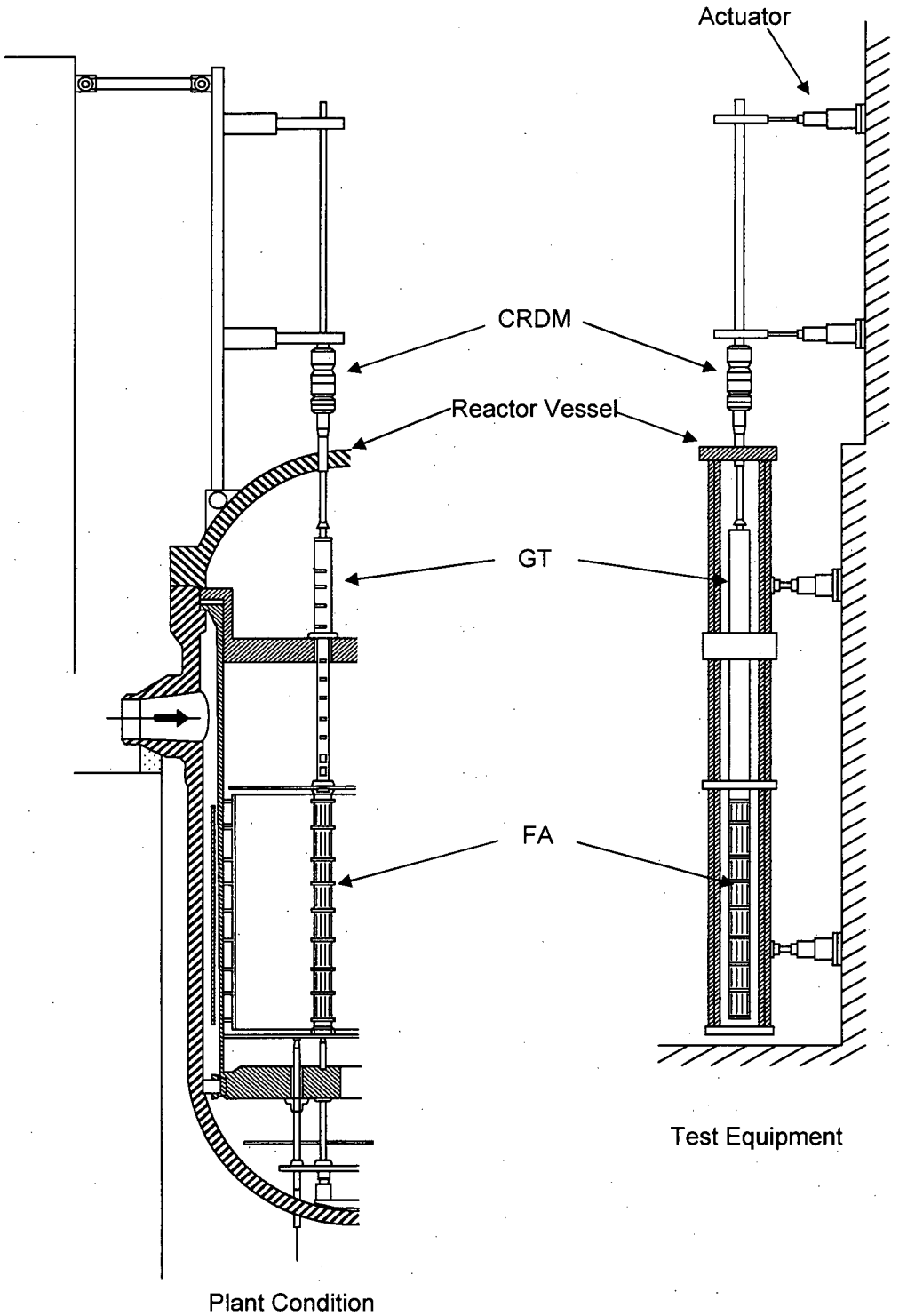

Figure-1 Test Equipment

Figure-2 Test Equipment and Measurement locations

Figure-3 Input and Response Acceleration of CRDM and RCCA Drop Time Data