NUREG-0857
Supplement No. 7

Safety Evaluation Report
related to the operation of Palo Verde Nuclear Generating Station, Units 1, 2, and 3

Docket Nos. STN 50-528, STN 50-529, and STN 50-530

Arizona Public Service Company, et al.

U.S. Nuclear Regulatory Commission

Office of Nuclear Reactor Regulation

December 1984

8501080275

NOTICE

Availability of Reference Materials Cited in NRC Publications

Most documents cited in NRC publications will be available from one of the following sources:

1. The NRC Public Document Room, 1717 H Street, N.W.
   Washington, DC 20555
2. The NRC/GPO Sales Program, U.S. Nuclear Regulatory Commission,
   Washington, DC 20555
3. The National Technical Information Service, Springfield, VA 22161

Although the listing that follows represents the majority of documents cited in NRC publications, it is not intended to be exhaustive.

Referenced documents available for inspection and copying for a fee from the NRC Public Document Room include NRC correspondence and internal NRC memoranda; NRC Office of Inspection and Enforcement bulletins, circulars, information notices, inspection and investigation notices; Licensee Event Reports; vendor reports and correspondence; Commission papers; and applicant and licensee documents and correspondence.

The following documents in the NUREG series are available for purchase from the NRC/GPO Sales Program: formal NRC staff and contractor reports, NRC-sponsored conference proceedings, and NRC booklets and brochures. Also available are Regulatory Guides, NRC regulations in the *Code of Federal Regulations,* and *Nuclear Regulatory Commission Issuances.*

Documents available from the National Technical Information Service include NUREG series reports and technical reports prepared by other federal agencies and reports prepared by the Atomic Energy Commission, forerunner agency to the Nuclear Regulatory Commission.

Documents available from public and special technical libraries include all open literature items, such as books, journal and periodical articles, and transactions. *Federal Register* notices, federal and state legislation, and congressional reports can usually be obtained from these libraries.

Documents such as theses, dissertations, foreign reports and translations, and non-NRC conference proceedings are available for purchase from the organization sponsoring the publication cited.

Single copies of NRC draft reports are available free, to the extent of supply, upon written request to the Division of Technical Information and Document Control, U.S. Nuclear Regulatory Commission, Washington, DC 20555.

Copies of industry codes and standards used in a substantive manner in the NRC regulatory process are maintained at the NRC Library, 7920 Norfolk Avenue, Bethesda, Maryland, and are available there for reference use by the public. Codes and standards are usually copyrighted and may be purchased from the originating organization or, if they are American National Standards, from the American National Standards Institute, 1430 Broadway, New York, NY 10018.

GPO Printed copy price: $5.50

NUREG-0857
Supplement No. 7

Safety Evaluation Report

related to the operation of Palo Verde Nuclear Generating Station, Units 1, 2, and 3

Docket Nos. STN 50-528, STN 50-529, and STN 50-530

Arizona Public Service Company, et al.

U.S. Nuclear Regulatory Commission

Office of Nuclear Reactor Regulation

December 1984

[illegible] Design Review with [illegible] Supplement 1, as discussed [illegible]

[illegible] and 1, together [illegible] staff, and walk-[illegible]

[illegible] qualified [illegible] guidelines for review [illegible] NUREG-0800.

ABSTRACT

Supplement No. 7 to the Safety Evaluation Report for the application filed by Arizona Public Service Company et al. for licenses to operate the Palo Verde Nuclear Generating Station, Units 1, 2, and 3 (Docket Nos. STN 50-528/529/530), located in Maricopa County, Arizona, has been prepared by the Office of Nuclear Reactor Regulation of the Nuclear Regulatory Commission. The purpose of this supplement is to update the Safety Evaluation Report by providing an evaluation of (1) additional information submitted by the applicant since Supplement No. 6 was issued and (2) matters that the staff had under review when Supplement No. 6 was issued.

TABLE OF CONTENTS

	Page
ABSTRACT	iii
1 INTRODUCTION AND GENERAL DISCUSSION	1-1
1.1 Introduction	1-1
1.9 Summary of Outstanding Issues	1-1
1.10 Confirmatory Issues	1-2
1.11 License Conditions	1-3
2 SITE CHARACTERISTICS	2-1
2.5 Geology and Seismology	2-1
2.5.4 Stability of Subsurface Materials and Foundations	2-1
3 DESIGN CRITERIA - STRUCTURE, COMPONENTS, EQUIPMENT AND SYSTEMS	3-1
3.1 General	3-1
3.8 Design of Category I Structures	3-1
3.8.3 Concrete and Structural Steel Internal Structures	3-1
3.9 Mechanical Systems and Components	3-2
3.9.3 ASME Code Class 1, 2, and 3 Components, Component Supports, and Core Support Structures	3-2
3.9.7 Testing of Pressure Isolation Valves	3-2
3.10 Seismic and Dynamic Qualification of Category I Mechanical and Electrical Equipment	3-4
3.11 Environmental Qualification of Electrical Equipment Important to Safety and Safety-Related Mechanical Equipment	3-4
3.11.1 Evaluation	3-4
3.11.2 Conclusions	3-8
5 REACTOR COOLANT SYSTEM AND CONNECTED SYSTEMS	5-1
5.2 Integrity of Reactor Coolant Pressure Boundary	5-1
5.2.2 Overpressurization Protection	5-1
5.3 Reactor Vessel	5-1
5.3.1 Reactor Vessel Materials	5-1

TABLE OF CONTENTS (Continued)

		Page
	5.4 Component and Subsystem Design	5-1
	5.4.2 Steam Generators	5-2
	5.4.3 Shutdown Cooling (Residual Heat Removal) Systems	5-2
6	ENGINEERED SAFETY FEATURES	6-1
	6.2 Containment Systems	6-1
	6.2.4 Containment Isolation System	6-1
	6.2.6 Containment Leakage Testing	6-2
	6.3 Emergency Core Cooling System	6-3
	6.3.1 CESSAR Interface Evaluation	6-3
7	INSTRUMENTATION AND CONTROLS	7-1
	7.2 Reactor Protection System	7-1
	7.2.3 License Conditions	7-1
	7.2.4 Confirmatory Items	7-2
	7.4 Systems Required for Safe Shutdown	7-3
	7.4.2 Remote Shutdown Capability	7-3
	7.7 Control Systems	7-3
	7.7.2 Control System Failures	7-3
8	ELECTRIC POWER SYSTEMS	8-1
	8.4 Other Electrical Features and Requirements for Safety	8-2
	8.4.7 Adequacy of Station Electric Distribution System Voltages	8-2
9	AUXILIARY SYSTEMS	9-1
	9.1 Fuel Storage Facility	9-1
	9.1.4 Fuel-Handling System	9-1
	9.2 Water Systems	9-1
	9.2.6 Condensate Storage Facility	9-1
	9.3 Process Auxiliaries	9-1
	9.3.3 Equipment and Floor Drainage System	9-2

TABLE OF CONTENTS (Continued)

		Page
	9.5 Other Auxiliary Systems	9-2
	9.5.1 Fire Protection	9-2
10	STEAM AND POWER CONVERSION SYSTEM	10-1
	10.3 Main Steam Supply System	10-1
	10.3.3 Secondary Water Chemistry	10-1
	10.4 Other Features of the Steam and Power Conversion System	10-1
	10.4.7 Condensate and Feedwater System	10-1
	10.4.9 Auxiliary Feedwater System	10-1
11	RADIOACTIVE WASTE MANAGEMENT	11-1
	11.2 System Description and Evaluation	11-2
	11.2.3 Solid Radioactive Waste Treatment System (SRS)	11-2
12	RADIATION PROTECTION	12-1
13	CONDUCT OF OPERATIONS	13-1
	13.1 Organizational Structure and Qualifications	13-1
	13.1.1 Management and Technical Resources	13-1
	13.1.2 Operating Organization	13-5
	13.3 Emergency Planning	13-8
	13.3.1 Introduction	13-8
	13.3.2 Evaluation of the Applicant's Emergency Plan	13-9
	13.3.3 Federal Emergency Management Agency Findings on Offsite Emergency Plans and Preparedness	13-14
	13.3.4 Summary and Conclusions	13-15
	13.4 Operational Review	13-15
	13.4.1 Onsite Review	13-15
	13.4.2 Independent Review	13-15
	13.4.3 Independent Safety Engineering Group	13-16
	13.6 Physical Security	13-16
14	INITIAL TEST PROGRAM	14-1

TABLE OF CONTENTS (Continued)

		Page
15	ACCIDENT ANALYSES	15-1
	15.3 Limiting Accidents	15-3
	15.3.1 Steamline Breaks	15-3
	15.3.2 Feedwater System Pipe Breaks	15-5
	15.4 Radiological Consequences of Accidents	15-6
	15.4.1 Main Steamline Break Radiological Consequences	15-6
	15.4.5 Steam Generator Tube Rupture Accident	15-6
17	QUALITY ASSURANCE	17-1
	17.2 Organization	17-1
	17.3 Quality Assurance Program	17-3
22	TMI-2 REQUIREMENTS	22-1
	22.2 Evaluation of TMI Requirements	22-1
	I.A.1.1 Shift Technical Advisor	22-1
	I.A.2.2 Training and Qualifications of Operations Personnel	22-1
	II.D.1 Control Room Design Review	22-1
	II.B.3 Post-Accident Sampling Capability	22-3
	II.E.1.1 Auxiliary Feedwater System Evaluation	22-6
	II.K.1 IE Bulletin on Measures To Mitigate Small-Break LOCAs and Loss-of-Feedwater Accidents	22-6

APPENDICES

A CONTINUATION OF CHRONOLOGY OF RADIOLOGICAL REVIEW

B REFERENCES

E ABBREVIATIONS

F PRINCIPAL CONTRIBUTORS

G U.S. ARMY CORPS OF ENGINEERS: TECHNICAL REPORT

H RSB REVIEW OF CESSAR SUBMITTALS TO SUPPORT PALO VERDE LICENSE

I TECHNICAL EVALUATION REPORT, DETAILED CONTROL ROOM DESIGN REVIEW STATUS, ARIZONA PUBLIC SERVICE COMPANY, PALO VERDE NUCLEAR GENERATING STATION

J SAFETY PARAMETER DISPLAY SYSTEM STATUS REPORT FOR PALO VERDE 1, 2, AND 3

TABLE OF CONTENTS (Continued)

LIST OF FIGURES

	Page
13.1 APS corporate organization	13-17
13.2 APS nuclear organization	13-18
13.3 Nuclear operations organization	13-19
14.1 Control element assembly extension shaft guides	14-14
17.1 Arizona Public Service Company organization for PVNGS operation	17-4

1 INTRODUCTION AND GENERAL DISCUSSION

1.1 Introduction

On November 13, 1981, the Nuclear Regulatory Commission (NRC) staff issued its Safety Evaluation Report (SER) relating to the application for licenses to operate the Palo Verde Nuclear Generating Station, Unit Nos. 1, 2, and 3 (PVNGS 1-3); Supplement Nos. 1 through 6 to the SER were issued on February 4, 1982; May 17, 1982; September 23, 1984; March 15, 1983; November 28, 1983; and October 31, 1984, respectively. The application was submitted by the Arizona Public Service Company (APS or the applicant) on behalf of itself, the Salt River Project Agricultural Improvement and Power District, Southern California Edison Company, El Paso Electric Company, Public Service Company of New Mexico, Los Angeles Department of Water and Power, and Southern California Public Power Authority.

In the SER and its supplements, the staff identified certain issues for which either further information was required of the applicant or additional staff effort was needed to complete the review of the application. The purpose of this supplement is to update the SER by providing an evaluation of (1) additional information submitted by the applicant since Supplement No. 6 to the SER was issued, and (2) matters that the staff had under review when Supplement No. 6 was issued.

Each of the following sections of this supplement is numbered the same as the section of the SER and its supplements that is being updated and, unless otherwise noted, the discussions are supplementary to and not in lieu of the previous discussions. Appendix A to this supplement is a continuation of the chronology. Appendix B, References, lists material used in preparing this supplement. Appendix E is a list of abbreviations used in this supplement. Appendix F is a list of principal contributors to this supplement. Appendix G is a geotechnical report prepared by the U.S. Army Corps of Engineers. Appendix H is a staff review of CESSAR submittals to support PVNGS 1-3 license. Appendix I is a Technical Evaluation report prepared by Lawrence Livermore National Laboratory, "Detailed Control Room Design Review Status," for PVNGS 1-3. Appendix J is a status report on the safety parameter display system for PVNGS 1-3.

1.9 Summary of Outstanding Issues

Section 1.9 of Supplement No. 6 contained a list of the outstanding issues. All of the issues requiring resolution before PVNGS Unit 1 fuel loading and testing up to 5% of full power have now been resolved. These are listed below, along with the section of this supplement wherein their resolution is discussed.

(1) Foundation stability (2.5.4.3)
(2) Categorization of pressure isolation valves (3.9.7)
(3) Environmental qualification (3.11)
(4) Pressurizer auxiliary spray system (5.4.3)
(5) Qualification of control systems (7.7.2)

(6) Associated circuits (9.5.1.6)
(7) Organizational structure (13.1)
(8) Onsite emergency preparedness (13.3)
(9) Physical security (13.6)
(10) Initial test program (14)
(11) Preoperational test results (14)
(12) Steam generator tube rupture accident (15.4.5)
(13) QA program description (17)
(14) Post-accident sampling system (22.2, Item II.B.3)

There are several issues remaining outstanding that require resolution before plant operation above 5% of full power. These are listed below along with the section of this supplement wherein each issue is discussed. These remaining issues will be addressed in a future supplement to the SER.

(1) Natural circulation cooldown test (5.4.3)
(2) Pressurizer auxiliary spray system test (5.4.3)
(3) Periodic leak testing of containment isolation (6.2.4)
(4) Chemistry control and sampling systems (9.3)
(5) Offsite emergency preparedness (13.3.3)
(6) Accident analyses (15)

Also, there are three issues relating to PVNGS Units 2 and 3 that are still outstanding. These are listed below along with the section of the SER and/or its supplements wherein each issue is discussed. These remaining issues will be addressed in a future supplement to the SER.

(1) Guide tube wear surveillance, Unit 2 (4.2.5)
(2) Preservice inspection program, Units 2 and 3 (5.2.4, 6.6)
(3) Pressurized thermal shock, Units 2 and 3 (5.3.3)

1.10 Confirmatory Issues

Section 1.10 of Supplement No. 6 contained a list of issues that had been essentially resolved to the staff's satisfaction, but for which certain confirmatory information was to be provided by the applicant. Subsequent to the issuance of Supplement No. 6, the applicant provided the required confirmatory information for all of the issues that needed to be completed before PVNGS Unit 1 fuel loading and testing up to 5% of full power. These are listed below, along with the section of this supplement wherein the issue is resolved.

(1) Pump and valve operability program (3.9.3.2)
(2) Seismic qualification program (3.10)
(3) Relief valves for shutdown cooling system (5.4.3)
(4) Net positive suction head (NPSH) for emergency core cooling system (ECCS) pumps (6.3.1)
(5) Fiber-optic data links (7.2.4)
(6) Electric system overvoltages (8.4.7)
(7) Fire protection program (9.5.1)
(8) Alternative shutdown capability (9.5.1.6)
(9) Control room design review (22.2, Item I.D.1)

The remaining issues previously identified for resolution in Section 1.10 have been incorporated into the lists of Section 1.9 above.

1.11 License Conditions

Section 1.11 of the SER and Supplement Nos. 1, 2, 5, and 6 listed several issues for which a condition would be included in the operating license to ensure that NRC requirements are met during plant operation.

In Supplement No. 6 to the PVNGS 1-3 SER, the staff concluded that the license conditions relating to the ultimate capacity analysis of the containment and the administrative procedures for the plant monitoring system computers were no longer required since the applicant had already met the conditions. Subsequently, the staff has determined that a number of other license conditions are no longer required. These are listed below along with the section of this supplement where they are discussed.

The following license conditions are not necessary because they are covered by the Technical Specifications:

(1) Settlement monitoring program (2.5.4.3)
(2) Reactor vessel pressure temperature limits (5.3.1.3)
(3) Computer software modifications for core protection computer (7.2.3)
(4) Response time testing for resistance temperature detectors (7.2.3)
(5) Protective system setpoints (7.2.3)
(6) Secondary water chemistry program (10.3.3)

The following license conditions, regarding specific tests, are not necessary since the tests are included in the initial test program which will have a license condition:

(7) Remote shutdown panel test (7.4.2)
(8) Water-hammer test (10.4.7)

The following license conditions are not necessary because the conditions have already been met by the applicant:

(9) Design modification regarding non-Class 1E loads on Class 1E buses (as certified in the applicant's letter of November 28, 1984)
(10) Installation of low-temperature overpressure protection (LTOP) alarms (as certified in the applicant's letter of November 28, 1984)
(11) Control of heavy loads (9.1.4)
(12) Installation of T_{cold} indicator on remote shutdown panel (as certified in the applicant's letter of December 13, 1984)

The following license condition is not necessary because of corporate reorganization:

(13) Management policies regarding nuclear safety matters (13.1.1.2)

The five remaining license conditions from the staff's previous reviews, which will be included in the license, are listed below:

(1) Fuel surveillance (4.2.4)
(2) Guide tube wear surveillance (4.2.5)
(3) Compliance with Regulatory Guide 1.97 (7.5.2)
(4) Post-accident sampling capability (22.2, Item II.B.3)
(5) Inadequate core cooling instrumentation (ICCI) system (22.2, Item II.F.2)

In addition, the following license conditions, which are discussed in this supplement in the sections indicated, will also be included in the license:

(1) Pump and valve operability (3.9.3.2)
(2) Seismic qualification (3.10)
(3) Environmental qualification (3.11)
(4) Pressurizer safety valves (5.4)
(5) Chemistry control and sampling systems (9.3)
(6) Seals for auxiliary feedwater pump rooms (9.3.3)
(7) Fire protection program (9.5.1)
(8) Experience for operating shift crews (13.1.2.4)
(9) Chemical and Radiological Analysis Computer System (CRACS) (13.3.2.1)
(10) Detailed control room design review (22.2, Item I.D.1)
(11) Safety parameter display system (Appendix J)

2 SITE CHARACTERISTICS

2.5 Geology and Seismology

2.5.4 Stability of Subsurface Materials and Foundations

2.5.4.3 Foundation Stability

Introduction

As a result of a series of pipe breaks in temporary piping that occurred from January 1980 to December 1981 at all three of the PVNGS units, the NRC staff and its consultant investigated and evaluated the (1) adequacy of foundation soils following these breaks and resulting erosion and (2) impact on the foundation stability of seismic Category I structures and piping systems.

In order to provide service water, air, and fire protection utilities to seismic Category I structures during construction, temporary piping that measured from 2 to 4 in. in diameter had been placed beneath the foundation slabs of certain seismic Category I structures. In February 1980, at PVNGS Unit 2, flooding occurred above the foundation slab in the open space between the auxiliary and control buildings as a result of a break in the service water line. After the temporary domestic service water line had been shut off and during cleanup, an estimate was made that indicated approximately 3 cubic yards of foundation soil had been washed from beneath seismic Category I structures and into the open space between the auxiliary and control buildings. In September 1981, at PVNGS Unit 1, and in December 1981, at PVNGS Unit 3, leakage from other breaks in the temporary utility lines resulted in volumes of soil erosion of less than 3 cubic yards at each of these units. The exact causes of the breaks have not been definitely established, but it is believed the breaks may have been caused by settlements of soils beneath structures and the possible weakening of welds at pipe joints because of pipe corrosion. Soils investigations and analysis of the effects on structures because of the leakage and soil erosion were initiated by the applicant in November 1981 and 10 CFR 50.55(e) reports were filed with the NRC on potentially reportable deficiencies related to the pipe leaks and erosion effects.

In January 1984, in response to an allegation questioning the foundation adequacy of the auxiliary and control buildings, the staff initiated an evaluation of these pipe breaks and the soil erosion problems.

The staff began its investigation of the alleged foundation problem by reviewing all available pertinent documents and by contacting the alleger by telephone to better understand the basis for the safety concern which was alleged to exist. The major point supporting the allegation was field soil drillings and sampling results that indicated "disturbed" or "unstable" foundation soils. The "disturbed" soils beneath the auxiliary building were considered by the alleger to be potentially extensive enough to possibly cause excessive settlements and tilting of structures in the future.

In February 1984, the staff asked the applicant to provide information on (1) identification of the specific locations of all piping and connections and on the dates the piping was installed, (2) pressures actually applied in the pipelines, (3) soil compaction control measures actually required during construction around piping, (4) the mechanism believed to have caused the leaks and the location of the pipe breaks, (5) updated settlements including graphical plots with a comparison and an engineering evaluation of tilt and settlement records before and after pipe leaks were discovered and after remedial grouting measures had been taken, (6) the remedial grouting program that was performed, and (7) the basis for concluding that adequate foundation stability does exist in recognition of soil voids, reduced densities, shear strength, and increased compressibility of the disturbed backfill soils.

In June 1984, the applicant responded to these requests for additional geotechnical information. At the same time, the staff obtained the U.S. Army Corps of Engineers (COE), Tulsa District, as a consultant in geotechnical engineering for an independent review of the pipe break and soil erosion problem. COE visited the PVNGS site in August 1984 and met with the applicant and its consultants.

Evaluation of Impact of Soil Erosion on Foundation Stability

The extent of the applicant's investigations and evaluation of the pipe break and soil erosion problem is covered in the applicant's June 1984 report entitled, "Response to NRC Request for Additional Geotechnical Information, Docket Nos. 50-528/529/530, Palo Verde Nuclear Generating Station, Phoenix, Arizona," and in previous documentation referenced in this report. The COE report of October 5, 1984, provides a summary of the applicant's investigation and evaluation efforts and is included as Appendix G to this supplement. The major evaluation findings covered in these reports include the following:

(1) The applicant's investigation and documentation efforts are considered by the staff and its consultant to be thorough and acceptable. These efforts included pressure testing of the temporary pipelines, conducting soil borings, investigation of fill conditions by hand probing and cone penetrometer testing, laboratory soil testing to establish the extent of "disturbed" foundation soils, and a review of construction control records on soil compacting and settlement records.

(2) The soil compaction procedures during construction would make it very unlikely that any significant extent of low-density fill existed in the machine-compacted areas. This finding is supported by the field density test records.

(3) Saturation of the silty sand backfill materials resulting from the pipe leakage was shown by design test results not to have a significant effect on the strength and compressibility characteristics of the backfill soils.

(4) There was no evidence from the results of the investigative efforts to suggest that foundation soils beneath the control building had been adversely affected.

(5) The applicant's approach in evaluating the effects on the auxiliary building was to assume loss of foundation support over a 20-ft x 35-ft area beneath the wing of the auxiliary building. The results of this analysis

showed that the auxiliary building could span this area because the computed stresses in the reinforcing steel remained within allowable design stresses.

(6) Disturbance of the backfill soils resulting from the pipe break and leakage would be expected to be limited to a small zone near the break, as the water pressures would quickly be reduced at short distances from the point of the pipe break.

(7) The mechanics of soil erosion are such that erosion begins at the point where water exits (the open space between the auxiliary and control buildings) and progresses toward the source of the leak. Considering the size of the affected foundation, the volume of eroded soil which was observed was not excessive. Erosion likely occurred in the limited hand-compacted zones around the temporary piping and possibly along the wall of the auxiliary building where the fill densities may have been lower than in the larger, machine-compacted zones that provide the major foundation support for the safety-related structures.

(8) The settlement history records for the structures did not reveal any unusual or significant trends in settlement before or after the pipe leakage occurred.

(9) Grout measurements taken during pressure grouting through the temporary pipelines indicates the applicant was partially successful in filling openings in the backfill adjacent to the points of pipe leakage. This would restore foundation support to some degree.

Conclusions and Recommendations

On the basis of the review and findings of both the NRC staff and its consultant, the Corps of Engineers, the staff concludes that the measures taken by the applicant in evaluating the pipe break and the soil erosion problem were reasonable and adequate. The staff also concludes that the soil erosion that resulted from pipe breaks did not significantly affect the adequacy of foundation support for seismic Category I structures and piping systems. In addition, the staff finds the allegation questioning long-term foundation stability because of the pipe breaks and resulting soil erosion was a reasonable concern that has now been fully addressed and satisfactorily resolved.

The long-term settlement monitoring program which the applicant committed to in the FSAR, and which was discussed in the staff's SER, provides confidence that the PVNGS 1-3 plant structures and piping systems will be provided with safe foundation support during the years of plant operation. To obtain additional details of the long-term settlement monitoring program, the staff has requested information related to (1) the level of survey accuracy when monitoring settlements, (2) the specific monitoring point locations where post-construction total and differential settlements must meet the FSAR-established allowable settlement limits, and (3) actions to be taken by the applicant in the event that allowable limits are reached. In response, the applicant has informed the staff that it plans to provide the requested information in Amendment No. 14 to the FSAR, which is scheduled to be ready in February 1985. The staff does not consider that review of this information is essential prior to the start of plant operation because (1) the staff's past review and evaluation of existing settlement

records indicate satisfactory behavior to date and (2) the staff's recognition that settlement is a slow process where sufficient time is available to resolve these final settlement monitoring details. Therefore, this matter has been resolved for licensing purposes.

In the PVNGS 1-3 SER, the staff identified a condition for inclusion into the operating license for PVNGS 1-3 dealing with the settlement monitoring program. Upon further review, the staff has determined that this condition is more appropriate for, and has been inserted into, the Technical Specifications. Therefore, a license condition is not necessary.

3 DESIGN CRITERIA - STRUCTURE, COMPONENTS, EQUIPMENT AND SYSTEMS

3.1 General

In letters dated November 30, December 4, and December 7, 1984, the applicant submitted proposed changes to the FSAR which clarified the seismic classification for pipe hangers and supports, and updated the applicable ASME Code cases for PVNGS 1-3. The staff has reviewed these submittals and determined that they are in conformance with the applicable regulatory guides and Standard Review Plan sections. Therefore, the staff finds the proposed changes acceptable.

By letters dated December 10, 18, and 20, 1984, the applicant proposed changes to the inservice testing program for pumps in the spent fuel cooling system. The applicant stated that since the spent fuel pool cooling pumps run continuously and do not perform a safety function, they would be deleted from the inservice testing program. Because the condensate transfer tank and the refueling water storage tank provide a backup makeup water supply to the spent fuel pool, all active components that are necessary to transfer water from these tanks will be included in the inservice testing program. The staff finds this proposal acceptable.

3.8 Design of Category I Structures

3.8.3 Concrete and Structural Steel Internal Structures

In Amendment No. 13 to the FSAR, the applicant took exceptions to the (AWS) D1.1 welding code to reflect construction practices that have been used during construction at PVNGS 1-3. On the basis of its review of the changes, the staff concludes that these exceptions do not decrease the integrity of the structural steel weldments and, therefore, are acceptable.

In a letter dated December 10, 1984, the applicant proposed changes to clarify FSAR Section 3.8 to be consistent with the applicant's field specifications in three areas:

(1) Fabrication of the containment tendon system and the equipment hatch and personnel locks--This proposed change involves additional paragraphs in Section 3.8.1.6.1.2.A (tolerance in prestressed concrete for tendon sheathing and trumpet extensions) and in Section 3.8.1.6.4 (exceptions to the ASME Boiler and Pressure Vessel Code, Section III, Division 1, Subsection NE, Class MC components).

(2) Fillet weld profiles--This involves a new table of permissible profiles for various fillet weld sizes in Section 3.8.1.6.6.1.

(3) Stud welding performed under AWS D1.1--This proposed change makes a distinction that stud welding to non-pressure-retaining components of the containment liner is performed under AWS D1.1 rather than ASME Code Section IX and involves changes in FSAR Section 3.8.1.6.4.

All the above changes deal with tolerance requirements, welding procedures, and inspection procedures, and do not result in structural concerns. The staff finds that these changes do not decrease or impair the structural integrity of the plant and, therefore, the changes are acceptable.

3.9 Mechanical Systems and Components

3.9.3 ASME Code Class 1, 2, and 3 Components, Component Supports, and Core Support Structures

3.9.3.2 Pump and Valve Operability Assurance Program

In Supplement No. 5 to the PVNGS 1-3 SER, the staff had concluded that the pump and valve operability assurance program for PVNGS 1-3 meets the criteria described in the Standard Review Plan Section 3.10 (NUREG-0800). Since the program was still in progress, the staff requested that the applicant confirm, prior to fuel load, that the program was complete.

By letter dated December 10, 1984, the applicant stated that the pump and valve operability assurance program is complete except for the following:

(1) Four atmospheric dump valves (tag numbers J-SGB-HV-178, J-SGB-HV-179, J-SGB-HV-184, and J-SGB-HV-185).

(2) Two Q-class check valves (tag numbers P-SGA-V887 and P-SGA-V888).

(3) Four Anchor Darling air-operated valves (tag numbers J-SGB-UV-130, J-SGB-UV-135, J-SGA-UV-172, and J-SGA-UV-175).

(4) Two containment sump return check valves (tag numbers P-SIA-U205 and P-SIB-U206).

(5) Eight excess flow check valves (tag numbers J-ECA-XCV-15A, J-ECA-XCV-15B, J-ECB-XCV-16A, J-ECB-XCV-16B, J-EWA-XCV-89A, J-EWA-XCV-89B, J-EWB-XCV-90A, and J-EWB-XCV-90B).

The applicant has committed to have items 1, 2, 4, and 5 (above) qualified before initial criticality. Since these items are not required to perform their safety function before initial criticality (because no decay heat would be present), the staff finds this commitment acceptable.

For item 3 (above), a different actuator is being installed in the Anchor Darling air-operated valves to permit the valves to close fast enough. Testing of these valves will be complete before post-core hot functional testing (which will be completed before initial criticality). This is acceptable to the staff.

For all of the above items, the staff finds the schedule for completion to be reasonable. The applicant shall provide written confirmation that these items are qualified before the time specified.

3.9.7 Testing of Pressure Isolation Valves

In the PVNGS 1-3 SER, the staff required that the applicant categorize all the PVNGS 1-3 pressure isolation valves (PIVs) as A or AC according to IWV-2100 of Section XI of the ASME Code. Subsequently, in a letter dated February 17, 1984,

the applicant submitted a list of valves that had been categorized A or AC. As stated in the SER, the staff will require that these valves be leak rate tested to a 1.0-gpm criterion according to the Technical Specifications.

Upon review of the February 17, 1984, submittal, the staff identified four additional valves (SIUV-651, SIUV-652, SIUV-653, and SIUV-654) in the shutdown cooling system (SDCS) also required to be categorized A or AC and leak tested as PIVs. These are 16-in. motor-operated gate valves. In a letter dated August 21, 1984, the applicant agreed to categorize these four SDCS valves as category A and proposed the following leak rate testing be applied only for these four motor-operated valves (MOVs):

> Leak rates greater than 1 gpm but less than or equal to 5.0 gpm will be acceptable provided, for each subsequent test, the latest measured leak rate has not exceeded the rate determined by the previous test by an amount that reduces the margin between the measured leakage rate and the maximum permissible rate of 5.0 gpm by 50% or greater. Leakage rates greater than 5.0 gpm are unacceptable. In addition, leak tests shall be performed after the last disturbance at refueling outages and after maintenance or repair. The requirement to test after each disturbance will not apply for the SDCS MOV suction pressure isolation valves.

In support of this proposal, the applicant has stated that the four SDCS MOVs and associated systems have these following features:

(1) Positive valve position indication in the control room.

(2) Electrical interlocks that prevent valve opening and cause valve closure above a certain pressure.

(3) Large-capacity relief in the low-pressure piping with discharge to the containment recirculation sump.

The staff has accepted the applicant's proposed leak rate criteria for certain valves on other plants which have the above features. Therefore, the staff finds the applicant's proposal to be acceptable.

The applicant has agreed to test all other pressure isolation valves to the 1.0-gpm leak rate criterion.

Limiting conditions for operation in the Technical Specifications will require corrective action, i.e., shutdown or system isolation when the leakage limits are not met. Also, surveillance requirements, which will state the acceptable leak rate testing frequency, will be provided in the Technical Specifications.

Therefore, the staff concludes that the applicant's commitments to periodically leak test the pressure isolation valves between the reactor coolant system and low-pressure systems will provide adequate assurance that the design pressure of the low-pressure systems will not be exceeded and are acceptable. This matter is now resolved.

3.10 Seismic and Dynamic Qualification of Category I Mechanical and Electrical Equipment

In Supplement No. 5 to the PVNGS 1-3 SER, the staff concluded that the seismic and dynamic qualification program for PVNGS 1-3 was acceptable. Since the program was still in progress, the staff requested that the applicant verify, before fuel load, that the program was complete.

By letter dated December 7, 1984, the applicant stated that the seismic qualification program was complete except for the following:

(1) Two remote shutdown panels (tag numbers 1-J-ZPA-E01 and 1-J-ZJB-E01)

(2) Four temperature elements (tag numbers J-HFA-TE-73A, J-HFA-TE-73B, J-HFA-TE-74A, and J-HFA-TE-74B)

For the above items, the applicant has committed to have qualified equipment in place before reaching initial criticality. Because the shutdown panels and the temperature elements serve no safety function before initial criticality, the staff finds this commitment to be acceptable. The staff also finds the schedule for completion to be reasonable. The applicant shall provide written confirmation that the equipment is qualified before that time.

3.11 Environmental Qualification of Electrical Equipment Important to Safety and Safety-Related Mechanical Equipment

In Supplement No. 5 to the PVNGS 1-3 SER, several open issues were identified relating to environmental qualification of electrical equipment important to safety and safety-related mechanical equipment. The staff's evaluation of the applicant's responses to these outstanding items is discussed in the following section.

3.11.1 Evaluation

(1) TMI Action Plan Equipment

The applicant was informed that all TMI Action Plan equipment currently installed or to be installed before plant operation must be qualified or justifications for interim operation must be provided before an operating license will be granted. For any TMI Action Plan equipment not yet installed and that will not be installed before operation, a description of the plans for qualification, including the schedule for completion of qualification, was required.

By its letter of October 29, 1984, the applicant has confirmed that all TMI Action Plan equipment has been identified and included in the environmental qualification program. The staff finds the applicant's response acceptable.

(2) Non-Safety-Related Electrical Equipment

The staff requested a list of all non-safety-related electrical equipment, located in a harsh environment, whose failure under postulated environmental conditions could prevent satisfactory accomplishment of safety functions by the safety-related equipment. A description of the methods used to identify this equipment must be included in the environmental qualification program.

By letter dated December 20, 1983, the applicant responded that there is no non-safety-related electrical equipment located in a harsh environment whose failure under postulated accident conditions could prevent satisfactory accomplishment of a safety function by safety-related equipment. In addition to this, the staff has reviewed FSAR Section 8.3.1.2.2.6, which describes its compliance with Regulatory Guide (RG) 1.75. The staff has previously reviewed this FSAR section and found it to be acceptable (see SER Section 8.4.1).

The staff has also reviewed a study performed to analyze the effects of high energy breaks on controls systems (IE Information Notice 79-22). On the basis of the results of this study, the applicant has concluded that in all cases the events have been reduced to non-limiting, either by providing safety-grade equipment or by confirming that a control grade equipment failure would not increase the consequences of accidents already analyzed in Chapter 15 of the FSAR. The staff finds the analysis acceptable. The staff's evaluation is described in Section 7.7.2 of this supplement. On the basis of its findings, the staff concludes that the applicant's response to this item is acceptable.

(3) Safety-Related Electrical Equipment

The staff requested a statement that all safety-related electrical equipment in a harsh environment, as defined in the scope of 10 CFR 50.49, is included in the environmental qualification program.

By letter dated December 20, 1983, the applicant identified additional safety-related equipment to encompass all safety-related electrical equipment in a harsh environment as defined in 10 CFR 50.49. The staff finds the applicant's response acceptable.

(4) Post-Accident Monitoring Equipment

The staff required that a list be submitted of all post-accident monitoring equipment currently installed, or that will be installed prior to plant operation, that is specified as Category 1 or 2 in Revision 2 of RG 1.97 and is located in a harsh environment. The equipment identified must be included in the environmental qualification program.

By letter dated December 20, 1983, the applicant provided reference to a list of all RG 1.97 Category 1 and 2 electrical equipment located in a harsh environment. All the identified equipment has been included in the environmental qualification program. By letter dated May 25, 1984, the applicant has also stated that all RG 1.97 Category 1 and 2 electrical equipment located in a harsh environment is either qualified or justification for interim operation has been provided. The staff considers this item resolved.

(5) Equipment Subject to Submergence

The staff requested that the applicant provide a list of all equipment important to safety that could be subjected to submergence and provide justification that failure of this equipment will not affect the safety function of any other equipment and will not mislead the operator.

By letters dated December 20, 1983, and May 25, 1984, the applicant provided a list of all equipment important to safety that could be subjected to submergence. The applicant has stated that all these items of equipment perform

their function before they become submerged, and subsequent failure of the equipment will not affect the safety function of any other equipment and will not mislead the operator. The staff finds the applicant's response acceptable.

(6) Maintenance/Surveillance Program

The staff will verify that the maintenance/surveillance program is implemented before fuel loading.

By letter dated December 20, 1983, the applicant provided the discussion of the maintenance and surveillance program. The applicant also confirmed by its letter dated October 29, 1984, that the maintenance and surveillance program has been implemented at PVNGS Unit 1. The staff considers this item to be resolved.

(7) Environmental Qualification Files

During the staff's audit of the environmental qualification program, one of the staff's findings was that the arrangement of information and the information itself contained in the files were difficult to follow in some instances. Much of the pertinent information was neither contained in the files nor referenced.

By letters dated December 1, 1983, and May 25, 1984, the applicant confirmed that the qualification files have been reviewed for proper applicability of the test reports. In addition to this, the applicant referenced the qualification related deficiency evaluation reports (DERs) in the qualification files. The staff considers this item resolved.

(8) Staff Audit Issues

During the plant walkdown, the applicant was unable to locate two items: (1) Rockbestos cable inside containment and (2) pre-amplifier for excore detector. Another item (ASCO solenoid valve) did not have any name plate attached to it.

By letter dated December 1, 1983, the applicant informed the staff that a subsequent walkdown was performed by Arizona Public Service Company (APS) engineers. During this walkdown, APS engineers were able to locate the equipment and verify the qualification information. The applicant also initiated a design change package (DCP) to ensure that the problem of missing nameplates is not generic to other ASCO solenoid valves. The staff considers this item resolved.

(9) Duration of Operability for Accident Conditions

The applicant is using 30-day post-accident operability for most equipment. Only one item of equipment [high-pressure core spray (HPCS) pump motor] has been identified to have an operability of 4 months.

The staff completed its review and determined that 30-day post-accident operability was not acceptable. The staff asked the applicant to demonstrate 6-month post accident operability for post accident monitoring equipment and for equipment required for long-term core cooling. By letters dated May 25 and September 19, 1984, the applicant informed the staff that by using Arrhenius methodology it was able to demonstrate 182-day post-accident operability. The staff considers this item resolved.

(10) Staff Comments on Environmental Qualification Files

The staff reviewed ten files during an audit and made several comments on these files. The staff informed the applicant during the exit interview that these comments should also be applied to other files, if appropriate.

The applicant responded to the staff's comments by letters dated December 1, 1983, and May 25, September 19, October 29, and December 3 and 7, 1984. The applicant's responses to the findings are acceptable to the staff.

(11) Completion of Qualification Program

For items not expected to have full qualification before an operating license is granted, an analysis should be performed in accordance with paragraph (i) of 10 CFR 50.49 to ensure that the plant can be operated safely pending completion of environmental qualification.

By letters dated May 25, September 10, October 29, and December 3, 7, 13, and 26, 1984, the applicant submitted an updated list of equipment showing the status of its environmental qualification. As noted in its submittals, qualification of the following equipment was not complete:

(a) Hydrogen recombiner assembly and recombiner power control cabinet assembly

(b) Resistance temperature detector [(RTD) J-SIN-TE-712 and J-SIN-TE-713]

(c) Radiation monitors

(d) Electric solenoid valves (Target Rock, SI-605 through 608 and 613, 623, 633 and 643)

(e) Electric solenoid valve (Valcor)

(f) Temperature elements (HFA-TE-73A, 73B, 74A, and 74B)

(g) ITT Barton pressure transmitter (Model 764)

The applicant has also submitted the justification for interim operation (JIO) for this equipment. In accordance with these JIOs, items b, e, f, and g will be completely qualified before reaching initial criticality, and item d will be completely qualified before reaching the start of post-core hot functional testing (completed before reaching initial criticality). The staff finds the schedule for these items to be acceptable since they are not needed before then. Items a and c will be completely qualified by July 31, and November 1, 1985, respectively. For these two items, the applicant has identified redundant means for accomplishing their function in the interim. The staff finds these JIOs acceptable because they address the appropriate considerations of 10 CFR 50.49(i). The staff also finds that the schedule for completion of all the above items is reasonable.

(12) Mechanical Equipment

The applicant was requested to provide a list of environmentally qualified mechanical equipment.

By letter dated November 9, 1983, the applicant provided a complete list of mechanical equipment. By letter dated February 29, 1984, the applicant also forwarded the detailed information on three equipment packages to demonstrate the qualification of its equipment. The staff reviewed these packages and found them acceptable. By letter dated December 7, 1984, the applicant confirmed that its safety-related mechanical equipment qualification program for PVNGS 1-3 has been completed. The staff considers this item resolved.

(13) IE Information Notices

In addition to the open items identified in Supplement No. 5 to the SER, the staff asked the applicant to confirm that it had evaluated all IE Information Notices applicable to environmental qualification of equipment and to determine that either the information notice does apply to equipment in PVNGS 1-3 or corrective action has been taken to ensure that the equipment was qualified.

By letters dated September 19 and December 13, 1984, the applicant has provided the disposition to various information notices. As reported in these letters, the applicant either has taken corrective action to ensure equipment qualification or the particular information notice does not apply to PVNGS 1-3 except for one item. This item is related to Limitorque valve motor actuators (IE Information Notice 83-72, item 24). By letter dated December 26, 1984, the applicant has verified that corrective action has been completed to ensure qualification of this equipment.

3.11.2 Conclusions

On the basis of its evaluation, the staff concludes that all open items identified in Section 3.11 of Supplement No. 5 to the PVNGS 1-3 SER have been satisfactorily resolved for fuel loading.

The following conditions will be incorporated into the PVNGS Unit 1 license:

(1) All electrical equipment within the scope of 10 CFR 50.49 must be environmentally qualified by November 30, 1985.

(2) The applicant shall confirm that Target Rock solenoid valves have been completely qualified before the start of post-core hot functional testing.

(3) The applicant shall confirm that items b, e, f, and g, discussed in Section 3.11.1(11) of this supplement, have been completely qualified before initial criticality.

On the basis of its review and evaluation, the staff concludes that the applicant's environmental qualification program is acceptable and that adequate justification has been provided to authorize fuel loading. Therefore, pending completion of license conditions discussed above, the staff concludes that the applicant has demonstrated conformance with the requirements for environmental qualification, as detailed in 10 CFR 50.49, the relevant part of GDC 1 and 4 and Sections III, XI, and XVII of Appendix B to 10 CFR 50, and with the criteria specified in NUREG-0588.

5 REACTOR COOLANT SYSTEM AND CONNECTED SYSTEMS

5.2 Integrity of Reactor Coolant Pressure Boundary

5.2.2 Overpressurization Protection

In letters dated October 9, 1984, and December 4, 1984, the applicant submitted design changes to the shutdown cooling system (SCS). Specifically, the set pressure of the SCS relief valves has been increased from 435 psig to 467 psig. This change is made to provide a wider operating window for RCS operation while low-temperature overpressure protection (LTOP) is required and thus provide more plant operating flexibility.

For the purpose of verifying the acceptability of the change of SCS relief valve set pressure, the applicant performed a reanalysis of the transients resulting from either an RCP startup or two high-pressure safety injection (HPSI) and three charging pumps injecting into a water-solid RCS. These analyses also assumed that letdown was isolated and only one SCS relief valve was available with a set pressure of 467 psig. The results of these reanalyses indicate that the peak RCS pressures remain below 475 psig. Figure 3/4 3.4-2 of the PVNGS Technical Specification (Appendix G curve) shows that the maximum allowable pressure is 500 psia at the lowest temperature of 80°F.

The staff has reviewed the results of the applicant's reanalysis relative to LTOP and concludes that the peak RCS pressures during these events are well below the allowable limits of the Appendix G pressure/temperature curve shown in Figure 3/4 3.4-2 of the PVNGS Technical Specifications and, therefore, the change of SCS relief valve set pressure is acceptable.

5.3 Reactor Vessel

5.3.1 Reactor Vessel Materials

5.3.1.3 Compliance With Appendix H, 10 CFR Part 50

In the PVNGS 1-3 SER, the staff identified a condition for inclusion in the operating license for PVNGS 1-3 dealing with pressure-temperature limits for the reactor vessel. Upon further review, the staff has determined that this condition is more appropriate for, and has been inserted into, the Technical Specifications. Therefore, a license condition is not necessary.

5.4 Component and Subsystem Design

By letter dated December 10, 1984, the applicant proposed to decrease the reset pressure for the pressurizer safety valves from 5% below the nominal set pressure to 18.5% below (2040 psia), which would result in increased blowdown. The staff is continuing its review of the safety significance of the increased blowdown on power operation. The staff concludes that the proposed change does not affect the safety of the plant during initial fuel loading and pre-critical testing. However, the staff requires that the applicant establish the acceptability

of the increased blowdown before initial criticality is reached. The PVNGS Unit 1 license will be conditioned accordingly.

5.4.2 Steam Generators

5.4.2.1 Steam Generator Inservice Inspection

The staff's completed evaluation of the steam generator inservice inspection program was provided in the SER. Subsequently, by letter dated October 18, 1984, the applicant proposed a change to its commitment to Regulatory Guide 1.83, "Inservice Inspection of Pressurized Water Reactor Steam Generator Tubes," Revision 0, dated June 1974. In its letter, the applicant proposed that the preservice inspection of the steam generator tubes be performed before the field hydrostatic test and before service, instead of after the field hydrostatic test as previously committed.

Because Revision 1 to Regulatory Guide 1.83, dated July 1975, specifically permits this preservice steam generator tube inspection to be performed before the field hydrostatic test, the staff finds the proposed change to be acceptable.

5.4.3 Shutdown Cooling (Residual Heat Removal) System

In Supplement No. 6 to the SER, the staff stated that it had requested information to confirm that the large shutdown cooling system (SDCS) relief valves on PVNGS 1-3 can provide the required pressure-relief capacity and will subsequently reclose. Since then, the applicant has responded and the staff's completed review of this matter is presented below.

During the recently completed staff generic review of the need for rapid depressurization capability of the reactor coolant system on Combustion Engineering (CE) nuclear steam supply system (NSSS) plants without pressurizer power-operated relief valves (PORVs), the staff was made aware that the SDCS relief valves used on this class of plants (all CESSAR System 80 designs and a few others) are about an order of magnitude larger (approximately 4,000 gpm) than those used on other PWR plants. In PVNGS 1-3, these relief valves provide protection from brittle fracture for the reactor vessel during startup and shutdown in addition to providing overpressure protection for the SDCS system. The staff was aware that at the time the SDCS relief valves for these plants were manufactured, the ASME Boiler and Pressure Vessel Code permitted such valves to be capacity certified solely by calculations performed by the manufacturer. The recently completed Electric Power Research Institute (EPRI) tests, performed on full-size pressurized-water reactor (PWR) primary system safety valves (NUREG-0737 Item II.D.1) suggest that manufacturers cannot obtain a complete understanding of valve performance capability without at least some full-size test or operational experience. As a result, the staff requested that the applicant provide confirmation that the valves could perform their pressure-relief function and then subsequently reclose.

In order to satisfy the staff's concern, the applicant, along with representatives of CE and the valve manufacturer, Crosby Valve Division, Geosource, Inc., met with the staff on November 9, 1984, and provided information in a letter dated November 26, 1984. The information provided includes some limited valve test data on valves slightly smaller than the SDCS valves but which could be correlated to SDCS valve performance expected for plant transient conditions.

In particular, the manufacturer performed one test on a smaller valve at a pressure considerably below SDCS operating pressure, but with ambient temperature water under full-flow conditions. The applicant has shown that these test data along with test data using full pressure and temperature steam, i.e., essentially SDCS operating pressure and temperature, is applicable for establishing valve operability for SDCS relief valve service conditions. In addition, a representative of the valve manufacturer stated that the extensive operating experience with this type of valve, both in nuclear and nonnuclear service, has been acceptable. The few problems the manufacturer observed were predominantly related to set pressure drift. The manufacturer is not aware of any failure to reclose for any valves of the type used on the PVNGS 1-3 SDCS systems.

On the basis of the information provided above, the staff has concluded that there is adequate assurance that the PVNGS 1-3 SDCS relief valves can adequately perform their intended function to relieve system overpressure and subsequently reclose. Therefore, this matter has been resolved.

In Section 5.4.3 of Supplement No. 6 to the SER, the staff stated that a potential single failure has been identified in the auxiliary pressurizer spray (APS) system that may render the system unable to supply charging fluid to the pressurizer spray nozzle. The loop charging valve (CHE-PDY-240B) is manually operated and must be closed for charging flow to be diverted to the pressurizer for spray flow. Failure of the loop charging valve to close may cause insufficient flow to the pressurizer spray nozzle. The staff required that this potential single failure be addressed in the context of Branch Technical Position (BTP) RSB 5-1, Position A.3, as it relates to Class 2 plants. The staff also requested that the applicant address the basis for relying upon a non-safety-grade system (APS was not single-failure proof) to mitigate a design basis accident. The staff advised the applicant of this issue by a letter dated April 18, 1984.

In response to the staff's request, the applicant stated, in a letter dated October 25, 1984, that the CESSAR design is being modified. A redundant 2-in. fail-closed diaphragm valve (CHE-PDY-239B) is to be installed upstream of CHE-PDY-240B in the charging line. The valve and controls will be installed, tested and made operable before PVNGS Unit 1 fuel load. PVNGS Units 2 and 3 will also be modified prior to their respective fuel loads.

During the staff evaluation of the proposed system modification, the applicant informed the staff that power for the series loop charging valves would be from non-Class 1E power buses. Although it is recognized that these valves are designed to fail closed on loss of power supply, the information provided was insufficient to ensure that for any possible failure, the valves could be closed.

On the basis of this concern, the staff requested further information by letter dated December 4, 1984. The applicant responded by a letter dated December 7, 1984. The response provided a failure modes and effects analysis (FMEA) of the current design. Upon review, the staff concluded that the FMEA did not ensure that the subject valves would be capable of performing their intended protective functions as a result of all possible electrical failures associated with the non-Class 1E buses. Specifically, there was insufficient redundancy and electrical separation in the current design, and the applicant was proposing to take credit for non-Class 1E equipment for protection from possible common overvoltage or undervoltage conditions.

In a letter dated December 18, 1984, the applicant committed to add Class 1E overvoltage protection isolation relays to the non-Class 1E control circuitry for valves CHE-PDY-239B and CHE-PDY-240B. This modification will be complete before restart following the first refueling outage of PVNGS Unit 1, before exceeding 5% power for PVNGS Unit 2, and before fuel load for PVNGS Unit 3. The staff concludes that this resolves the electrical separation and redundancy concerns, and is acceptable.

The applicant stated that, until system modifications are completed for PVNGS Units 1 and 2, several alternate methods are available to deenergize valves CHE-PDY-239B and CHE-PDY-240B, thus assuring auxiliary pressurizer spray capability even with multiple failures of the non-Class 1E valve control system. Also, the air supply to the loop charging isolation valves can be terminated by closing the Class 1E instrument air containment isolation valve IAA-UV-2. The applicant's calculation indicated that the loop charging valves would be closed in approximately 15 minutes following the closure of the instrument air containment isolation valve because of air bleedoff from the valve air operators. There is also a manually operated isolation valve upstream of the valve IAA-UV-2 in the air supply line that can serve as the backup for terminating the air supply to the loop charging isolation valves. On the basis of the above, the staff agrees with the applicant's assessment and concludes that there is reasonable assurance that the auxiliary pressurizer spray system can function properly if it is needed during the first cycle of plant operation. Therefore, the staff finds the applicant's justification for interim operation acceptable.

In a letter dated December 14, 1984, the applicant stated that during preoperational testing, the differential temperature between the pressurizer and the main pressurizer spray line exceeded acceptance criteria. The internals of check valve RC-V-244 have been removed to allow higher flow and thus a lower temperature drop through the spray line. Since this check valve was installed to preclude diversion of the auxiliary spray system from the pressurizer to the cold legs in the event a main spray valve fails open, this modification could introduce a single failure vulnerability to the auxiliary pressurizer spray system. The applicant asserts that because of the actual configuration of the piping arrangement, there can be no substantial diversion of charging flow to the cold legs even with both main spray valves fully open.

A hand-calculated energy balance was performed and submitted for staff review in the applicant's letter dated December 21, 1984. The results of this simple calculation confirm the applicant's assertion; however, the calculation did not account for the possibility of steam condensation because of heat loss to containment and condensation on cold incoming charging fluid. This phenomenon could result in some of the incoming charging flow being diverted back into the normal spray line, and thus not be available for spray flow. From consideration of the system geometry and revised hand calculations submitted by the applicant, the staff believes that any diversion of incoming charging flow will not reduce the depressurization capability below that assumed in the BTP RSB 5-1 or steam generator tube rupture (SGTR) analyses. However, the applicant must perform tests to confirm that the diversion is not appreciable and that the depressurization rate will be acceptable.

The applicant, in its letter dated December 21, 1984, has committed to perform tests to verify the proper operation of the auxiliary pressurizer spray system without the normal spray line check valve internals installed and with both

normal spray valves open. The tests will be performed during the natural circulation, boron mixing tests which are described below. The performance of the auxiliary spray system will be investigated for a range of RCS pressures and temperatures, and pressurizer levels covering the range of conditions in which the spray system is assumed to operate. The staff will review the specific test procedures and acceptance criteria along with the other natural circulation, boron mixing test procedures, which are still under review.

In response to a confirmatory issue in the SER regarding natural circulation cooldown testing, the applicant (by letter dated August 7, 1984) provided a description of the PVNGS test program which is intended to satisfy the requirements of BTP RSB 5-1 with respect to natural circulation and boron mixing tests. This test program includes demonstrating the ability to bring a CESSAR System 80 plant to cold shutdown, with only safety-related equipment operating, using only offsite power with a concurrent single failure. This program also includes demonstrations of boron mixing during natural circulation, available nitrogen capacity to the atmospheric dump valves, and available condensate storage capacity. These tests are planned to be performed during the PVNGS Unit 1 power ascension test program at 50% and 80% power levels. The proposed test program is still under the staff review. As the program will not be performed during low-power operation, the staff's review can be completed before a full-power license is issued, and will be discussed in a future supplement to the SER.

In a letter dated October 9, 1984, the applicant described changes to the shutdown cooling system (SCS) operating pressure, relief valve set pressure, and open permissive interlock setpoint. These design changes are to facilitate the use of the SCS for LTOP and provide a wider operating window for RCS operation while LTOP is required. Also the SCS maximum operating suction pressure is being increased to 485 psig. The relief valve set pressure is being raised from 435 to 467 psig, and the open permissive interlock setpoint is being raised from 400 to 410 psig.

Shutdown cooling is initiated when the RCS temperature and pressure drop below approximately 350°F and 410 psia. An interlock prevents opening the shutdown cooling suction isolation valves if RCS pressure is above 410 psia. The setpoint for automatic isolation of the SCS had been raised to 700 psig previously.

The results of the applicant's reanalysis of the transients which could lead to the maximum pressure in the SCS and the RCS have been reviewed by the staff and are addressed in Section 5.2.2 of this supplement. The peak pressure of the systems during those transients is below 475 psig. On the basis of the above results, the staff concluded that the change of SCS operating pressure, relief valve set pressure, and open permissive interlock setpoint are acceptable because the peak pressure of the SCS is below the SCS design pressure of 650 psig.

6 ENGINEERED SAFETY FEATURES

6.2 Containment Systems

6.2.4 Containment Isolation System

By letters dated November 5, 1984, and December 5, 1984, the applicant submitted proposed changes to the FSAR to reflect field test results and to support the Technical Specifications. The FSAR changes of primary concern to the staff include:

(1) Revision of the containment isolation valve closure times for the main steam, main feedwater, containment purge system, and several other system lines in FSAR Table 6.2.4-2.

(2) Revision of the containment analyses for the main steamline break accident, to reflect changes in main steam and feedwater line isolation valve closure times.

The acceptability of the changes in the valve closure times was reviewed by the staff to determine the impact of the changes in valve closure times on the safety analyses. The staff's evaluation of this matter is presented below.

The applicant has changed the closure times for the main steam isolation valves (MSIVs) from 5 seconds to 4.6 seconds and for the main feedwater isolation valves (MFIVs) from 5 seconds to 9.6 seconds, to reflect field test results. The applicant has also reanalyzed the limiting main steamline break (MSLB) accident for equipment qualification purposes (i.e., the 8.78 ft^2 slot break at 102% power), using the revised MSIV and MFIV closure times. The results of the applicant's analysis indicate that the peak containment pressure remains essentially unchanged at 41 psig (containment design pressure is 60 psig) and the containment peak temperature is reduced from 370°F to 360°F.

On the basis of the staff's review of the applicant's MSLB analysis, including input data and assumptions, the staff concludes that the adjusted MSIV and MFIV closure times do not pose an unreviewed safety problem and are acceptable.

The applicant has also changed the closure time of the 8-in.-diameter power access purge system isolation valves from 5 seconds to 8 seconds. Taking into consideration the elapsed time from the onset of a large high energy line break accident to initiation of isolation valve closure, purge line isolation will occur in less than 12 seconds. The staff has previously found that for 8-in. purge lines, an overall isolation time on the order of 12 seconds has a negligible impact on the minimum containment pressure analysis for the emergency core cooling system (ECCS) performance evaluation, and on the offsite radiological consequences, in the unlikely event that a loss-of-coolant accident (LOCA) occurs with the power access purge valves open. Therefore, the change in closure time for the purge valves is acceptable.

By letter dated December 10, 1984, the applicant identified additional changes to the containment isolation valve systems, which the staff is currently reviewing. Additional staff effort, including substantial dialogue with the applicant, will be required to complete the review. Since the changes are primarily concerned with the periodic local leak rate testing program and such testing is not scheduled to be done before the first refueling outage, resolution of this matter can be deferred beyond initial operation without impacting plant safety. The staff's review of this matter will be completed before a full-power license is issued.

6.2.6 Containment Leakage Testing

Containment Air Lock Surveillance

By letter dated December 13, 1984, the applicant requested an exemption from the requirement of Paragraph III.D.2(b)(ii) of Appendix J to 10 CFR 50. Paragraph III.D.2(b)(ii) of Appendix J states:

> Air locks opened during periods when containment integrity is not required by the plant's Technical Specifications shall be tested at the end of such periods at not less than P_a.

The above Appendix J requirement would require a full-pressure air-lock test after every shutdown regardless of the purpose of the shutdown. In lieu of this requirement, the applicant proposes to perform a full-pressure air-lock test only when maintenance is performed on the air lock which could affect the air-lock sealing capability. This proposed change requires an exemption from the requirements of Appendix J to 10 CFR 50. The staff's evaluation of this exemption request follows.

Whenever the plant is in cold shutdown (Mode 5) or refueling (Mode 6), containment integrity is not required. However, if an air lock is opened during Modes 5 and 6, Paragraph III.D.2(b)(ii) of Appendix J requires that an overall air-lock leakage test at not less than P_a be conducted prior to plant heatup and startup (i.e., prior to entering Mode 4). The existing air-lock doors are so designed that a full pressure test, i.e., P_a (49.2 psig), of an entire air lock can only be performed after strong backs (structural bracing) have been installed on the inner door. Strong backs are needed since the pressure exerted on the inner door during the test is in a direction opposite to that of the accident pressure direction. Installing strong backs, performing the test, and removing strong backs, require at least 6 hours per air lock, during which access through the air lock is prohibited.

If the periodic 6-month test of Paragraph III.D.2(b)(i) of Appendix J and the test required by Paragraph III.D.2(b)(iii) of Appendix J are current, no maintenance has been performed on the air lock, and the air lock is properly sealed, there should be no reason to expect the air lock to leak excessively just because it has been opened in Mode 5 or Mode 6.

Accordingly, the staff concludes that the applicant's proposed approach of substituting the seal leakage test of Paragraph III.D.2(b)(iii) is acceptable when no maintenance has been performed on an air lock. Whenever maintenance has been

performed on an air lock, the full-pressure test of Paragraph III.D.2(b)(ii) of Appendix J must still be met by the applicant.

Therefore, an exemption from this requirement [10 CFR 50, Appendix J, Paragraph III.D.2(b)(ii)] is justified and acceptable for PVNGS 1-3 and the applicant's proposed changes to the Technical Specifications concerning this subject are acceptable.

6.3 Emergency Core Cooling System

6.3.1 CESSAR Interface Evaluation

In the PVNGS 1-3 SER, the staff required that, following preoperational testing of the ECCS, the applicant confirm that the available NPSH for the ECCS pumps exceeds the required net positive suction head (NPSH) by using the as-built hydraulic resistances and pump flows.

By a letter dated October 5, 1984, the applicant submitted the results of its preoperational testing of ECCS pumps. The staff reviewed the applicant's test data and has concluded that the results of these tests confirmed the available NPSH for these ECCS pumps exceeds the required NPSH values described in CESSAR FSAR Table 6.3.2-5a. Therefore, they are acceptable and this issue has been resolved.

7 INSTRUMENTATION AND CONTROLS

By letter dated December 12, 1984, the applicant submitted proposed FSAR changes for staff review. Upon review of this draft information (FSAR Section 8.3.1.4.1.2, Item E), the staff found that the plant protection system (PPS) cabinet control and instrumentation circuits do not meet the 6-in.-separation criterion of IEEE Standard 384. The applicant's submittal references Section 7.1.2.10 of the CESSAR FSAR for justification for this exception, which was provided by the applicant in a letter dated December 18, 1984.

CESSAR FSAR Section 7.1.2.10 states that in the formation of the logic matrices (AB, AC, AD, BC, BD, CD) for the PPS initiation and actuation circuits, 6-in. separation is not maintained, nor can barriers or conduit be utilized. It also states that tests and analyses have been completed to demonstrate that no single credible event in one PPS bay can prevent the redundant Class 1E circuitry in any other bay from performing its safety function.

The staff met with the applicant on December 18, 1984, to discuss and perform an audit of the test program and analyses. The audit consisted of a review of the test configuration, the application of worst-case credible faults, the acceptance criteria, and the results. On the basis of this audit in combination with the CESSAR FSAR, the staff concludes that there is reasonable assurance that the PPS design will maintain adequate separation between the redundant Class 1E protection channels assuming worst-case credible faults. Therefore, the staff considers this issue resolved.

7.2 Reactor Protection System

Generic Letter 83-28 (Required Actions Based on Generic Implications of Salem ATWS Events) dated July 8, 1983, was issued by the staff to address intermediate-term actions required of licensees and applicants as a result of the Salem ATWS events. The actions address issues in the areas of post-trip review, equipment classification and vendor interface, post-maintenance testing, and reactor trip system reliability improvements.

By letters dated November 3, 1983, and October 9 and December 18, 1984, the applicant provided responses and the implementation schedule for each of the Generic Letter requirements. The staff finds the applicant's commitments for submitting further responses to, and implementing the requirements of, Generic Letter 83-28 to be acceptable and will so condition the applicant's license.

The staff is planning to review the submittals on a technical basis for each of the Generic Letter 83-28 requirements. The applicant will be advised on the results of the staff's technical reviews.

7.2.3 License Conditions

In the PVNGS 1-3 SER, the staff identified three conditions for inclusion in the operating license for PVNGS 1-3 dealing with (1) computer software

modifications for the core protection calculator, (2) response time testing of resistance temperature devices, and (3) protective system setpoints. Upon further review, the staff has determined that these conditions are more appropriate for, and have been inserted into, the Technical Specifications. Therefore, license conditions for the above items are not necessary.

7.2.4 Confirmatory Items

Amendment No. 12 to the FSAR revised Section 7.2 to state that the core protection calculator (CPC) system and core element assembly calculators (CEACs) will provide their outputs and a number of their inputs to the plant monitoring system (PMS) which is considered to be non-safety-related. Fiber-optic data links are to be used for this interface. The staff understands that this interface will be monodirectional (i.e., signals from the protection system to the PMS).

Paragraph 4.7.2 of IEEE Standard 279-1971 permits the use of isolation devices to transmit signals from protection systems for use in non-safety-related systems such as the PMS. Each type of isolation device must be qualified to maintain appropriate electrical independence. Upon request, the applicant has provided information by letters dated September 7 and November 29, 1984, to describe the isolation capabilities of the subject fiber-optic data links. The staff's evaluation of this information is presented below.

The four CPCs and the two CEACs in the DNBR/LPD calculator system communicate individually with the PMS. The fiber-optic modules at each end of the interface function as transducers. The transducers convert electrical signals to light pulses at the transmitting end (CPC or CEAC) and convert the light signals to electrical signals at the receiving end (PMS). Each cable is approximately 150 ft long.

The construction of the optic cable is such that the cable contains no electrically conductive material. For such non-electrical conductive media, the fault voltage must exceed the fiber-optic cable withstand voltage (cable breakdown voltage per meter multiplied by the cable length (meters)) for the fault to propagate. The applicant's analysis shows that the fiber-optic cable withstand voltage is several orders of magnitude greater than the maximum credible fault voltage postulated for PVNGS 1-3. The applicant has stated that there does not exist any voltage in the plant greater than the isolator can withstand. The applicant did state that a fault at either end of the data link might destroy the end modules but will not propagate over the fiber-optic cable. Also, the applicant has provided information in its November 29, 1984, letter to verify that the fiber-optic isolation device is safety related, seismically qualified, and has the capability to perform its intended safety function during the worst-case environment that it should ever experience during plant operation, including anticipated operational occurrences.

On the basis of the foregoing, the staff concludes that the maximum credible electrical fault that could be applied to the isolation device output (i.e., PMS) at Palo Verde should not degrade below an acceptable level the operation of the circuit connected to the input (i.e., CPC/CEAC). Therefore, this issue is considered resolved.

7.4 Systems Required for Safe Shutdown

7.4.2 Remote Shutdown Capability

In the PVNGS 1-3 SER, the staff identified a condition for inclusion in the operating license for PVNGS 1-3 dealing with a test of the remote shutdown panel. Upon further review, the staff has determined that the test is already included in the applicant's initial test program. Since the license will contain a condition regarding performance of the initial test program, a specific condition for the remote shutdown panel test is not necessary.

7.7 Control Systems

7.7.2 Control System Failures

In Section 7.7.2 of the SER, the staff stated that the applicant had not responded to NRC Question 222.03 dealing with failures of control systems because of high-energy line break (HELB) effects (related to IE Information Notice 79-22). Subsequently, the applicant has provided information to address the subject issue by letters dated July 1, 1983; November 16, 1983; February 14, 1984; and September 7, 1984. The staff's evaluation of the applicant's response is presented below.

The information provided verifies that the applicant has analyzed the PVNGS 1-3 design to determine which harsh environments associated with HELBs would cause simultaneous control system malfunctions. The applicant provided a summary of the events resulting from the various HELBs and identified the specific FSAR analysis that would bound the resulting consequences of each simultaneous failure.

One area of the applicant's analysis results warrants a detailed discussion. Specifically, in its letter of November 16, 1983, the applicant stated that the combined failure of the steam bypass control system (SBCS) and reactor regulating system (RRS) during a common steamline break (SLB) event is not credible since there are interlocks within these control systems that prevent simultaneous operation (worst-case failures that exacerbate event consequences) of these two control systems. The event scenario of concern is the failure of the SBCS such that a quick open signal is generated in combination with the RRS generating a control element assembly (CEA) withdrawal signal during an SLB inside containment. However, the generation of a quick open signal by the SBCS will produce an automatic withdrawal prohibit (AWP) signal which is sent to the control element drive mechanism control system (CEDMCS) to block its response to RRS demands to withdraw CEAs. The SBCS will (1) block a CEA withdrawal signal from the RRS if generated after the AWP command, or (2) terminate an automatic CEA withdrawal if already in progress upon receipt of an AWP.

The applicant has provided information to confirm that the SLB event common to the SBCS and RRS will not affect the control system interlocks circuitry. Also, the staff has reviewed drawings supplied by the applicant to verify the interaction of the RRS and SBCS output signals with the CEDMCS as discussed above.

On the basis of the above discussion, the staff concludes that the consequences of HELB events on control systems are bounded by the FSAR analyses. The staff considers this issue to be resolved.

8 ELECTRIC POWER SYSTEMS

By letter dated December 10, 1984, the applicant proposed changes to Chapter 8 of the PVNGS 1-3 FSAR. The staff reviewed this submittal which contained changes to Section 8.3 of the FSAR regarding the engineered safety features actuation system (ESFAS) sequencer testing, a change to the sequenced start time of the diesel generator heating, ventilation, and air conditioning (HVAC) system, the addition of a manual emergency start control for the B train diesel generator (change for fire protection) and some editorial changes. The staff concludes that these changes have no safety significance; therefore, these changes are acceptable. The modification made to the low-pressure safety-injection pumps is also acceptable (the existing 500-hp pumps are replaced with 800-hp pumps) because the total loads on the diesel generators are well within their continuous ratings.

By letter dated December 12, 1984, the applicant identified certain cases where the separation between the Class 1E and non-Class 1E circuits does not meet the recommendations of Regulatory Guide (RG) 1.75, "Physical Independence of Electrical Circuits." The applicant has submitted a case-by-case analysis for each of these cases for staff review. Testing and/or analyses are acceptable methods for demonstrating adequate separation in accordance with the requirements of IEEE Standard 3.84, "Criteria for Independence of Electrical Circuits," and the recommendations of RG 1.75. Staff evaluation of these circuits follows.

For instrument circuits included in Section 8.3.1.4.1.H of the FSAR, the applicant has demonstrated that these cables are low-energy cables and as such cannot affect any Class 1E cables in the vicinity. The staff has reviewed this information and concludes that these low-energy circuits under faulted conditions do not pose any threat to the Class 1E circuits because the cable ampacities in some of these circuits exceed the maximum fault current or in other cases the power supplies to these circuits are current limited.

For non-Class 1E circuits associated with the cranes, containment building monorail hoists, and diesel generator bridge cranes that do not meet the separation requirements of RG 1.75, the applicant has stated that during plant operation these circuits will be deenergized and thus will not pose any threat to the Class 1E circuits. The staff finds this proposal acceptable; however, the plant administrative procedures should be implemented to ensure that these circuits will be deenergized during plant operation.

Originally, the applicant stated that the separation between the control element drive mechanism (CEDM) power feeders (non-Class 1E) and the CEDM reed switch position transmitter circuits (Class 1E) did not meet the separation criteria of RG 1.75. However, after further investigation, the applicant has stated that there is no violation of RG 1.75 and will withdraw this item as a proposed change to the FSAR. On the basis of the above, the staff considers this item not to be an issue.

Therefore, the staff finds the applicant's proposed changes to the FSAR in the December 12, 1984, submittal to be acceptable.

8.4 Other Electrical Features and Requirements for Safety

8.4.7 Adequacy of Station Electric Distribution System Voltages

In Supplement No. 6 to the PVNGS 1-3 SER, the staff stated that it asked the applicant to provide additional information to confirm that the higher grid voltages do not adversely affect safety-related equipment performance. This request was made since Amendment No. 12 to the FSAR had stated that the maximum voltages to the safety-related equipment may reach 118% of the rated voltage during situations of light loading such as refueling with maximum grid voltage (102.5%) and supplying one train of accident loads to one unit.

By letters dated July 6, 1984, and November 29, 1984, the applicant provided a criterion for setting of the Class 1E load center transformer taps which will eliminate any electrical equipment from being energized or operated in excess of the continuous rating under expected switchyard voltages. This criterion establishes that load center transformer taps would be set at the -5% setting with the measurement made at the phase-to-phase bus voltage. The taps would subsequently be adjusted downward as required until the voltage to the safety-related electric equipment did not exceed 480 V + 10%. These tap settings would be performed before descending to the refueling mode with established procedures. The staff finds this criterion to be acceptable. Therefore, this issue has been resolved.

9 AUXILIARY SYSTEMS

9.1 Fuel Storage Facility

9.1.4 Fuel-Handling System

In Supplement 5 to the PVNGS 1-3 SER, the staff imposed a license condition regarding compliance with the criteria of Phase II (Sections 5.1.2 through 5.1.6) of NUREG-0612, "Control of Heavy Loads at Nuclear Power Plants." On the basis of the applicant's compliance with the criteria of Phase I of NUREG-0612 and the staff review of Phase II to date, the applicant need take no further action to satisfy the above license condition. Therefore, this condition is no longer required.

9.2 Water Systems

9.2.6 Condensate Storage Facility

By letter December 10, 1984, the applicant deleted the automatic closure of the redundant seismic Category I isolation valves in the suction line from the condensate storage tank to the nonseismic Category I motor-driven auxiliary feedwater (AFW) pump on receipt of an auxiliary feedwater actuation signal. This change was made in order to satisfy the need for improved AFW system availability by precluding automatic closure of the suction supply to the nonseismic Category I AFW pump when a demand for the AFW system is present. Should a seismic event occur when the nonseismic Category I AFW pump (see Section 10.4.9 of the SER) is in service, the operator can take the necessary action to locally close one of the suction line valves should the line fail. This action can be taken in sufficient time to prevent a significant loss of water from the condensate storage tank. The staff, therefore, finds this change to be acceptable. This change also applies to the discussion of isolation of the seismic Category I portions of the AFW system from nonseismic Category I portions contained in Section 10.4.9 of the SER.

9.3 Process Auxiliaries

The staff's completed review of the process sampling system, the chemical and volume control system (CVCS), and the secondary water chemistry monitoring and control system was presented in Sections 9.3.2, 9.3.4, and 10.3.3 of the SER, respectively. The containment spray as a fission product cleanup system was resolved in Section 6.5.2 of Supplement No. 5 to the SER.

Subsequently, by letters dated December 10, 18, and 21, 1984, the applicant submitted proposed FSAR changes in the above systems to (1) revise the materials compatibility of the hydrazine transfer line in the containment spray system; (2) revise the purge flow rate of the process sampling lines and the process sample pressure for relief protection in the CVCS; (3) revise or delete some of the water chemistry limits for the demineralizer effluent in the reactor makeup water system, the reactor coolant makeup water, and the primary coolant water; and (4) revise or delete some of the water chemistry limits for the steam generator secondary water, for the feedwater and condensate.

The staff is currently reviewing the proposed changes and requires that the applicant provide the following additional information to permit the staff to complete its evaluation:

(1) Information on and justification for the type of material used in the hydrazine transfer line in the containment spray system.

(2) Justifications for the revised sample pressure for relief protection in the CVCS.

(3) Justifications for the revised and deleted water chemistry limits for the demineralizer effluent in the reactor makeup water system, the reactor coolant makeup water, and the primary coolant water.

(4) Justification for the revised and deleted water chemistry limits for the steam generator secondary water and for the feedwater and condensate.

The staff concludes that the review of these items can be completed after fuel load but before initial criticality since no potential safety problem will exist during that time. However, the staff requires that the applicant provide the required information by February 1, 1985, so that the staff can complete its review prior to initial criticality of PVNGS Unit 1. The PVNGS Unit 1 license will be conditioned accordingly.

9.3.3 Equipment and Floor Drainage System

By letter dated December 5, 1984, the applicant indicated that penetration seals providing internal flood protection for the auxiliary feedwater pump rooms would not be installed at the time of fuel loading for PVNGS Unit 1. However, this feature will be installed prior to initial criticality. The staff finds this delay to be acceptable on the basis that no nuclear decay heat will be generated prior to initial criticality, and therefore the safety function provided by the auxiliary feedwater system is not required until that time. The staff also finds that the schedule for completing the action is reasonable. However, the staff requires that the following condition be placed in the PVNGS Unit 1 license in order to ensure that proper flood protection is implemented:

Prior to initial criticality, APS shall have installed and satisfactorily tested the auxiliary feedwater pump compartments flood protection seals.

9.5 Other Auxiliary Systems

9.5.1 Fire Protection

In Supplement No. 6 to the Safety Evaluation Report (SER), the staff indicated that the applicant had requested approval for a number of deviations from the fire protection guidelines and that the staff would be evaluating these deviations in a subsequent supplement to the SER.

By letters dated April 13; July 9; August 21; September 26 and 27; October 2, 5, 9, and 16 (two letters); November 13, 21, and 28; December 3, 5, 7, 10 (two letters), 13 (two letters), and 17, 1984; and in FSAR Amendment No. 13; the applicant provided additional information, including commitments to provide additional fire protection in certain plant areas. Sections 9.5.1.2, 9.5.1.3,

9.5.1.5, 9.5.1.6, and 9.5.1.11 of the SER have been supplemented and amended to reflect the results of the staff's evaluation of this information and further review of certain features of the fire protection program.

9.5.1.2 Fire Protection Systems Description and Evaluation

Water Supply System

In the SER, the staff stated that the applicant had agreed to modify the fire protection water supply main so that in the event of a single break in the pipe, water would be available for either primary or secondary fire protection systems. The purpose for the modification is to resolve the staff's concern that a single failure could interrupt the primary and secondary fire protection for elevations 120 ft and 140 ft of the auxiliary building and for the fuel and radwaste buildings. By letters dated December 5 and 13, 1984, the applicant described the actions it will take to address this concern. These actions are discussed below.

For the auxiliary building the applicant committed to add an indicating-type valve and piping that will isolate the hose stations on elevation 120 ft and 140 ft so that a single break will not interrupt primary and secondary fire suppression systems. This work will be completed before April 1, 1985. Implementation of modifications prior to low power operation is not necessary because only small quantities of radionuclide inventory will exist in the reactor coolant system and, therefore, will not affect the health and safety of the public. Pending completion of this modification, if a single break occurs in these locations of the auxiliary building, backup fire suppression will be provided from the nearest active hose station in accordance with Technical Specification Section 3/4.7.11.4.

For the radwaste building, the applicant will utilize 150 ft of fire hose at hose station No. 33 in the auxiliary building. Therefore, if a single break occurs, water for manual hose streams will be available from the auxiliary building to completely protect the radwaste building.

For the fuel building, if a break in the water supply pipe occurs, the applicant committed to implement the Technical Specification backup water supply requirements of Section 3.7.11.1 by laying a pre-connected hose line to the fuel building from an external hose house.

Because the above measures provide reasonable assurance that water for manual fire fighting will available in the event of a break in a water supply pipe, the staff concludes that the requirements of GDC 3 have been met. These measures are, therefore, acceptable.

In the SER, the staff stated that yard hydrants are provided at intervals not exceeding 250 ft and that a hose house is provided for each hydrant. In fact, yard hydrants within each unit are provided at intervals not exceeding 250 ft and hose houses are provided for every other hydrant. This design conforms to the guidelines of Section C.2.g of Appendix A to BTP APCSB 9.5-1 and is, therefore, acceptable.

By letter dated December 7, 1984, the applicant identified deviations from the guidelines of NFPA Standard Nos. 24 and 26 to the extent that they require all

water supply valves to be marked so as to indicate which section of the water supply they control. The outside post-indicator valves are not marked because the underground main is looped and, therefore, it is not possible to clearly indicate the control function. In addition, all inside control valves, which would be the primary means of controlling water flow during or after a fire are provided with signs per the above standards. The staff, therefore, concludes that this is an acceptable deviation from the above-referenced standards and Section C.2.g of Appendix A to BTP APCSB 9.5-1.

In Amendment No. 13 to the FSAR, the applicant indicated that the header isolation valves for standpipe and hose stations will be supervised by inspection. This would represent a deviation from the staff's guidelines. However, by letter dated December 13, 1984, the applicant indicated that header isolation valves will either be electrically supervised or locked open. Where valves are neither locked nor electrically supervised, the applicant committed to seal the valves open and to inspect them weekly. This conforms to Section C.3.b of Appendix A to BTP APSCB 9.5-1 and is, therefore, acceptable.

In Amendment No. 13 to the FSAR and in a letter dated December 7, 1984, the applicant identified three deviations from the guidelines of NFPA Standard No. 20 pertaining to the design of the fuel supply to the diesel-driven fire pump and the circuit breaker to the electric-motor-driven fire pump. On the basis of the staff's evaluation, the staff agrees with the applicant's justification for these conditions, as detailed in the above-referenced documents, and concludes that the applicant's alternate configuration is equivalent to that achieved by literal conformance to NFPA Standard No. 20. Therefore, these conditions represent an acceptable deviation from Section C.2.c of Appendix A to BTP APCSB 9.5-1.

Sprinkler and Standpipe Systems

In Supplement No. 6, to the SER, the staff evaluated the applicant's proposal to use 125-ft lengths of fire hose in several areas of the plant. By letters dated April 13 and December 5 and 14, 1984, the applicant proposed to use 150-ft lengths of hose in some areas in lieu of the standard hose length so as to provide better assurance of complete protection for these locations. The hose stations which are equipped with 125 ft and 150 ft of fire hose are shown on the December 13, 1984, revision to the FSAR fire protection drawings.

The applicant has verified that no significant hydraulic degradation will occur with the use of these lengths of hose. Because these areas are easily accessible, the fire brigade will be able to deploy the hose lines to provide complete protection for the affected areas. The staff, therefore, concludes that the installation of 125-ft and 150-ft lengths of hose line is an acceptable deviation from Section C.3.d of Appendix A to BTP APCSB 9.5-1.

By letter dated December 7, 1984, and in Amendment No. 13 to the FSAR, the applicant identified deviations from the guidelines of NFPA Standard No. 14 and Section C.3.d of Appendix A to BTP APCSB 9.5-1. Specifically, in the design of the standpipe and hose system, the applicant did not install isolation valves on all standpipe branch lines; did not install a pressure gauge at the top of the standpipe riser; and designed the water supply piping to feed more than one standpipe outlet in three locations. However, the applicant has confirmed by letter dated December 13, 1984, that the hydraulic requirements of NFPA Standard

No. 14 are met by this design. Also, if these multiple hose outlets were rendered inoperable, primary fire suppression would be unaffected and backup hose stations would be available to supply water for manual fire fighting. These conditions, therefore, have no safety significance and represent an acceptable deviation from Section C.3.d of Appendix A to BTP APCSB 9.5-1.

In the SER, the staff stated that the charcoal filters of the containment cooling system were protected by a water suppression system that conforms to the guidelines of NFPA Standard Nos. 13 and 15. In fact, these filters are protected by interior, fixed-pipe, water suppression systems with manual fire hose connections. This protection is in accordance with Regulatory Guide 1.52 and is, therefore, acceptable.

In Amendment No. 13 to the FSAR, the applicant indicated that contrary to the staff's guidelines, local sprinkler protection for areas of cable concentration did not exist in the cable shafts in the control building and above the motor generator sets in Zone 54 on elevation 120 ft of the auxiliary building (Fire Area XV). Because of the configuration of the shafts, the presence of significant quantities of transient combustibles is not considered credible. In Zone 54 the in situ and transient combustibles have been calculated to be 1,400 Btu/ft^2, which represents a fire severity of less than one minute as determined by the ASTM Standard E 119 time-temperature curve. The staff, therefore, concludes that the exposure fire hazard to these areas is insignificant.

Because the above cables are IEEE Standard 383 qualified, a cable-induced fire is also not a significant fire threat. If a fire should occur in these locations, it would be detected early by the existing fire detection systems. This provides the staff with reasonable assurance of early fire brigade awareness and arrival. Pending arrival of the brigade and eventual fire extinguishment via manual fire fighting equipment, the 3-hour construction of the cable chase enclosures and the perimeter construction of Fire Area XV, as described in the FSAR, provide reasonable assurance that the effects of the fire will not propagate beyond the immediate fire area and will not damage redundant shutdown systems in adjoining plant locations. Therefore, the absence of sprinkler protection in the above-referenced areas represents an acceptable deviation from Section D.3(c) of Appendix A to BTP APCSB 9.5-1.

By letter dated December 7, 1984, the applicant identified three deviations from the guidelines of NFPA Standard No. 15 pertaining to the design of fixed water spray systems. Specifically, they relate to: (1) the absence of low-point drains for the systems protecting the main transformers and the main lube oil storage area; (2) the absence of test gauge connections at the most remote nozzle on each major section of the spray systems; and (3) the fact that underground water supply piping is not pitched to facilitate draining and prevent freezing of the water in the pipes. However, drainage is accomplished through a Y-connection at the ground surface of the transformers and oil storage area. The applicant has also verified, by hydraulic calculations and by actual discharge tests, that sufficient pressure is available at all water spray nozzles. And, although freezing is not an environmental issue at the plant, adequate drainage of piping can take place at the "pump-out" connection. The staff, therefore, concludes that these conditions have no safety consequences and they, therefore, represent an acceptable deviation from Section C.3.(c) of Appendix A to BTP APCSB 9.5-1.

Gaseous Fire Suppression Systems

In the SER, the staff listed the areas that are provided with a Halon 1301 fire suppression system. By letter dated December 10, 1984, the applicant committed to install Halon 1301 fire suppression systems in each of the remote shutdown panel rooms (refer to Section 9.5.1.3 of this supplement for the evaluation of this proposal). Therefore, the above-referenced list in the SER should be expanded to reflect the systems for the remote shutdown panel rooms (Zones 10A and 10B).

Fire Detection System

In Supplement No. 6 to the SER, the staff stated that the diesel fire pump "controller trouble" alarm circuit is Class A supervised. Actually it is Class "B" supervised. This design conforms with the guidelines of Section C.1 of Appendix A to BTP APCSB 9.5-1 and is, therefore, acceptable.

In Supplement No. 6 to the SER, the staff identified a number of locations where additional fire detectors were to be installed. The spray chemical accumulator room and the spray chemical storage tank room (Zone 51B) were identified as two separate areas. In fact, both rooms comprise the single location identified as Zone 51B, spray chemical storage tank room.

In Supplement No. 6 to the SER, the staff evaluated safety-related plant locations where no fire detectors were provided. In Amendment No. 13 to the FSAR, and by letter dated December 7, 1984, the applicant identified a number of additional locations where fire detectors were not provided. At the staff's request, the applicant, by letter dated December 13, 1984, committed to install additional fire detectors above the suspended ceilings in the computer room (Zone 16) and in the auxiliary building laboratory rooms (Zones 57A and 57K) before April 1, 1985. Implementation of these modifications prior to low power operation is not necessary because only small quantities of radionuclide inventory will exist in the reactor coolant system and, therefore, will not affect the health and safety of the public. In the corridor building, the decontamination and laundry facility area (Zones 91A through 91D), and in the warehouse used for the storage of dry ion exchange resins, the staff agrees with the applicant's justification, as stated in the above-referenced documents, that no fire detectors are required. The staff also concludes that the absence of fire detectors in these locations is an acceptable deviation from the guidelines of Appendix A to BTP APCSB 9.5-1.

Pending installation of the new detectors in the computer and laboratory rooms, the applicant will establish an hourly fire watch in these locations. These measures provide reasonable assurance that fire will be discovered in its incipient stages, before significant damage occurs, and will be suppressed manually by the plant fire brigade. This satisfies the requirements of General Design Criterion (GDC) 3 and is, therefore, acceptable.

9.5.1.3 Other Items Related to Fire Protection Programs

Fire Barrier and Fire Barrier Penetrations

In the SER and in Supplement No. 6 to the SER, the staff evaluated fire area boundary construction. In Amendment No. 13 to the FSAR, the applicant requested

approval for deviations from Section III.G of Appendix R to the extent that exterior walls, basemats, and roofs, which form the boundaries of fire areas, are not fire rated. The staff was concerned that an exterior fire may threaten shutdown capability. However, these construction features are not required to separate shutdown-related systems inside the plant from external fire hazards, such as oil-filled transformers. Also, they do not separate safety-related areas from non-safety-related areas that present a significant fire threat to the safety-related areas. The staff, therefore, concludes that the walls, basemats, and roofs described in the FSAR define valid fire areas as required by Section III.G of Appendix R and they represent an acceptable deviation from Section D.1 of BTP APCSB 9.5-1.

In the FSAR, the applicant described the construction of heating, ventilation, and air conditioning (HVAC) chase walls and stairwell walls of reinforced concrete construction that have a fire rating of 2 to 3 hours. These conditions represent a deviation from the technical requirements of Section III.G of Appendix R which stipulate that redundant shutdown divisions be separated by 3-hour fire-rated construction. Both the chase walls and the stairwell walls are continuous. All openings are protected by fire doors, fire dampers, or penetration seals. The interiors of the chases and stairwell are free of any fire hazard. For a fire to cause damage to redundant shutdown divisions, a fire has to burn through at least a 2-hour barrier, spread vertically in the chase, and burn through at least another 2-hour-rated barrier on an upper level. The staff, therefore, concludes that the chase and stairwell walls provide the equivalent of a 4-hour fire barrier between shutdown divisions, and therefore, achieve literal compliance with Section III.G of Appendix R and Section D.1 of BTP APCSB 9.5-1.

In Amendment No. 13 to the FSAR, the applicant described 6-in. (nominal) seismic gaps which are located in the boundary floors and walls between Fire Area I (control building) and Fire Area X (radwaste building), and between Fire Area II (control building) and the corridor building. The gaps are covered with non-fire-rated, solid, 18-gauge sheet-metal flashings on each side of a reinforced concrete stub wall or pillar. The staff was concerned that, because the gaps are not sealed with a fire-rated material, fire propagation through the gap would result in damage to redundant shutdown divisions. However, neither the radwaste building nor the corridor building contain safe shutdown equipment or cables. Therefore, fire propagation through the gap will have no effect on the ability to achieve and maintain safe shutdown. The combustible materials on either side of the gap are either negligible or are protected by an automatic deluge water spray system. Therefore, any potential fire would not be of sufficient magnitude to produce temperatures which would cause the metal flashings to fail. Because the flashings are tight against the stud walls and pillars, smoke and hot gases would not propagate to the adjoining area pending arrival of the fire brigade. The staff, therefore, concludes that the locations referenced above are valid fire areas, as required by Section III of Appendix R, and the fire area boundary construction represents an acceptable deviation from Section I.1 of Appendix A to BTP APCSB 9.5-1.

A similar situation exists in the central wall of the "dead space compartment" between the auxiliary and control buildings as delineated in the FSAR. The central wall of the dead space compartment between the auxiliary and control buildings is a fire area boundary common to Fire Area I (Zone 86A) and Fire Area II (Zone 86B) at elevations 74 ft, 100 ft, 120 ft, and 140 ft. The wall is reinforced concrete with a nominal 6-in. seismic gap. The seismic gap is

covered by solid 1/4-in. steel plates bolted tightly to each side of the concrete wall so that there is no path for heat or smoke to travel through the steel plate. The dead air space between the steel plates will have an insulating quality, thus minimizing radiant heat transfer to the other side as well as eliminating convected heat through the barrier. Existing fire protection consists of a fire detection system, cable tray fire suppression systems, and manual firefighting equipment as detailed in the FSAR.

The combustible materials on either side of the gap are either negligible or protected by an automatic deluge water spray system. Therefore, any potential fire would not be of sufficient magnitude to produce temperatures which would cause the steel plates to fail. Because the plates are tight against the walls, smoke and hot gases would not spread to the adjoining area pending arrival of the fire brigade. The staff, therefore, concludes that the wall referenced above is a valid fire area boundary as required by Section III of Appendix R, and the fire area boundary construction represents an acceptable deviation from Section D.1 of Appendix A to BTP APCSB 9.5-1.

In Supplement No. 6 to the SER, the staff found acceptable the absence of a fire-rated sealant at the seismic gap at the containment building/auxiliary building interface because of adequate compensatory protection. In Amendment No. 13 to the FSAR, the applicant indicated that this gap will be sealed with a fire-rated sealant. With the installation of this material, the boundary construction will be in compliance with Section D.1 of Appendix A to BTP APCSB 9.5-1 and is, therefore, acceptable.

In Amendment No. 13 to the FSAR, the applicant requested approval for a deviation from the technical requirements of Section III.G of Appendix R to the extent that it requires that fire area boundaries be defined by fire-rated construction. Mechanical and electrical penetrations and the personnel access hatch in the containment boundary are not fire rated. The mechanical penetrations are constructed of steel with a minimum thickness of 1/8-in. The electrical containment penetrations are fitted with a header plate of 1.78-in. steel. The personnel access hatch is constructed of 1-in.-thick steel. The above features, as designed in conjunction with the reinforced concrete containment boundary, form a continuous barrier to the passage of flame and hot gases from one fire area to another. The areas on both sides of the boundary are protected by fire detection systems, fire suppression systems, and manual firefighting equipment as delineated in the FSAR. Combustible materials are limited and generally well dispersed throughout the areas. Where concentrated combustibles or significant fire hazards exist, a fire suppression system is provided. The penetrations and access hatch are also located at varying distances below the ceiling. This means that the stratified hot gas layer which would form at the ceiling during a fire would not encompass the penetrations until well after a fire starts. By that time, the fire would be controlled either automatically or manually by the fire brigade. The staff, therefore, concludes that the design of the penetrations and the access hatch will withstand the effects of a postulated fire until extinguishment. The containment boundary, therefore, is a valid fire area boundary as required by Section III.G of Appendix R, and the design of the penetrations represents an acceptable deviation from Section D.1 of Appendix A to BTP APCSB 9.5-1.

In letters dated October 2 and December 10, 1984, the applicant requested approval for a deviation from the technical requirements of Section III.G of

Appendix R to the extent that it requires 3-hour fire-rated walls between redundant shutdown systems in the remote shutdown rooms (Zones 10A and 10B). The common wall between the individual rooms is 2-hour fire rated. The fire load in Zone 10A is about 55,000 Btu/ft^2 and in Zone 10B it is about 37,000 Btu/ft^2. This represents a fire severity of about 42 and 28 minutes, respectively, as determined by the ASTM Standard E 119 time-temperature curve. Existing fire protection consists of both smoke and heat detectors as well as portable fire-fighting equipment. To compensate for the moderate-to-heavy fire load, the applicant committed, in the letters referenced above, to install automatic Halon fire suppression systems in each of these rooms by April 1, 1985. Implementation of these modifications prior to low power operation is not necessary because only small quantities of radionuclide inventory will exist in the reactor coolant system and, therefore, will not affect the health and safety of the public. Pending installation of the systems, the applicant also committed to establish hourly fire watches in these areas until the systems are functional. The applicant's commitments, along with the interim fire watch, comply with the requirements of Section III.G.2 of Appendix R to 10 CFR 50 and to GDC 3 and are, therefore, acceptable.

In the SER, the staff evaluated the 2-hour and 3-hour fire-rated walls throughout the plant. By letter dated December 10, 1984, the applicant revised the fire ratings of certain walls within a fire zone. This action is consistent with previous efforts by the applicant to redefine fire areas so as to satisfy the technical requirements of Appendix R. The revised fire ratings have no safety significance because the walls are within the confines of valid fire areas that have been previously reviewed.

By letter dated October 2, 1984, the applicant identified a number of modifications that will be implemented to improve the fire integrity of certain existing fire barriers so as to satisfy staff concerns. This work will be completed before April 1, 1985. Implementation of these modifications prior to low power operation is not necessary because only small quantities of radionuclide inventory will exist in the reactor coolant system and, therefore, will not affect the health and safety of the public. As compensation pending the completion of these modifications, the applicant committed in the same letter to establish an hourly fire watch in these areas. The applicant's commitments, along with the interim fire watch, comply with the guidelines of Section D.1(a) of Appendix A to BTP APCSB 9.5-1 and GDC 3 and are, therefore, acceptable.

In Amendment No. 13 to the FSAR, the applicant indicated that the structural steel which supports the floor of Fire Area XVII (auxiliary building) will be protected by a "fire proofing" material that is 1-hour fire rated. If all of the combustibles below the floor were totally consumed, the resulting fire would have a fire severity of less than 20 minutes as determined by the time-temperature curve of ASTM Standard E 119. The 1-hour fire proofing will, therefore, provide adequate protection for the steel, with adequate margin. The staff finds this acceptable.

Fire Doors and Dampers

In the SER and in Supplement No. 6 to the SER, the staff evaluated the installation of fire dampers in fire-rated walls and floor/ceiling assemblies. By letter dated September 27, 1984, the applicant provided a revised fire hazards analysis for those plant locations where fire dampers are not installed flush

with the fire wall. The staff's initial concern was that a fire of significant magnitude would cause these dampers to collapse, with resulting fire spread into the adjoining fire area. However, these locations can be characterized as either having negligible fire loading, such as within HVAC shafts, or where the fire hazard is significant, the hazard is mitigated by an automatic fire suppression system. These areas are also protected by fire detection systems and manual firefighting equipment as delineated in the FSAR. Also, in the auxiliary building, where the dampers are installed in walls which separate redundant shutdown divisions, the horizontal separation distance between divisions is approximately 60 ft or more. Therefore, if the dampers should fail and fire should propagate through the resulting opening, there is sufficient separation between the divisions to provide reasonable assurance that one division will remain free of damage. The staff, therefore, concludes that the installation of the dampers identified in the applicant's letter of September 27, 1984, is an acceptable deviation from the guidelines in Section D.1 of BTP APCSB 9.5-1.

In Supplement No. 6, to the SER, the staff stated that fire dampers installed in metal lath and plaster (ML&P) walls are listed by Underwriter's Laboratories (UL) for installation in such walls. Actually, the dampers are not listed for such use. However, the dampers have been tested in accordance with the method of ASTM Standard E 119 for other types of walls. Also, the applicant has installed fire proofing on the first duct support on either side of the damper to provide added assurance that the damper will not be pulled out from the wall if the duct should be exposed to fire. On this basis, the staff concludes that the installation of fire dampers in ML&P walls is acceptable and meets the guidelines of Section K.1 of BTP APCSB 9.5-1.

During a test of certain fire dampers at the plant, some dampers failed to close under normal operating and flow conditions. The problem was caused by: (1) the interference of conduit for the electro-thermal link on some vertical dampers and (2) insufficiently strong "negator" springs on the horizontal dampers. The applicant has committed to modify the dampers by removing the conduits in both the vertical and horizontal dampers and by providing new negator springs and modified locking mechanisms by fuel load as detailed in a letter dated December 8, 1984. The staff finds this acceptable.

In Supplement No. 6 to the SER, the staff evaluated certain non-fire-rated door assemblies in the plant. In Amendment No. 13 to the FSAR, the applicant identified a number of "missile-proof" doors that the staff had not previously evaluated. The staff was concerned that in the event of a significant fire, the door would fail and result in fire damage to redundant shutdown systems.

However, by letter dated December 13, 1984, the applicant provided justification as to why these doors need not be fire rated. Specifically, they must be modified to meet other staff criteria and in doing so they lose their fire rating. There are no unmitigated fire hazards within 50 ft of the doors, and they are located in exterior walls and do not separate redundant safe shutdown equipment. Where the above criterion has not been met, the applicant has installed a redundant set of doors that have been manufactured to meet UL's standards for listed fire doors (door J 319). For two other doors (J 208 and J 408), the applicant has committed to install local sprinkler protection to protect the doors in the event of a significant fire. This will be done by April 1, 1985. Implementation of these modifications prior to low power operation is not necessary because only small quantities of radionuclide inventory will exist in the

reactor coolant system and, therefore, will not affect the health and safety of the public. On the basis of its evaluation of the conditions identified above, the staff concludes that the non-fire-rated missile doors identified in the December 13, 1984, letter represent an acceptable deviation from Section D.1 of Appendix A to BTP APCSB 9.5-1.

In Supplement No. 6 to the SER, the staff evaluated a fire door assembly that had a monorail passing through a transom above the door. The description referred to a removable piece in the monorail that would be disassembled when the monorail was not in use. In fact, the double swinging transom door is notched to close when the rail is not in use. This correction does not affect the evaluation of the door in Supplement No. 6.

9.5.1.5 Fire Protection for Specific Areas

Control Room

In Amendment No. 13 to the FSAR, the applicant requested approval for a deviation in the main control room (Zone 17) from the technical requirements of Section III.G of Appendix R to the extent that it requires a fixed fire suppression system in an area for which an alternate shutdown capability has been provided.

The main control room is isolated from adjacent areas by fire-rated walls and floor/ceiling assemblies. The fire hazard in this area is low. Because of the wide dispersion of the combustible materials that may ignite, a potential fire would tend to develop slowly. Because of the smoke detection systems and the continuous manning in the control room, a fire would be detected in its initial stages and extinguished before serious damage occurred. Therefore, a fixed fire suppression system is not necessary to limit fire damage.

If damage to redundant shutdown systems inside the control room should occur before the arrival of the plant fire brigade, an alternate shutdown capability exists that is independent of the control room. Therefore, safe shutdown could be achieved and maintained. The staff concludes that the absence of a fixed fire suppression system in the main control room is an acceptable deviation from Section III.G of Appendix R.

Cable Spreading Room

In the SER, the staff stated that the cable spreading room was protected by a water spray system. In fact, it is protected by a pre-action-type sprinkler system. This correction does not affect the staff's evaluation of this area.

Containment Building

By letter dated August 21, 1984, the applicant described the construction and configuration of 12 instrument nozzle taps with 3/8-in.-diameter stainless steel sensing lines for redundant steam generator level and pressure transmitters. The transmitters themselves are located outside the secondary shield.

The instrument sensing lines for the differential pressure measurement across the primary side of the steam generator are also located in the same area within containment. They are constructed of the same material.

The sensing lines and instrument taps are located between 20 and 40 ft above the floor. On the basis of the construction of the sensing lines as described above, the staff concludes that they represent radiant energy shields as stipulated in Section III.G of Appendix R and are, therefore, acceptable.

Emergency Diesel Generator Rooms

By letter dated December 7, 1984, the applicant requested approval for a deviation from the guidelines of NFPA Standard No. 30 to the extent that it would require one of three methods to ensure that fuel oil from the day tanks in the diesel generator rooms would not continue to flow during a fire in the vicinity of the tank. These methods cannot be employed because they would conflict with other staff design requirements to ensure diesel generator operability for design-basis-accident mitigation. Instead, the applicant has surrounded the day tanks by 3-hour fire-rated barriers and protected the area with automatic fire suppression systems. Because these features will provide reasonable assurance that both a fuel oil spill and a fire will be controlled, the staff concludes that this condition represents an acceptable deviation from NFPA Standard No. 30 and Section F.10 of BTP APCSB 9.5-1.

Switchgear Rooms

In the SER, the staff evaluated the 2-hour fire-rated walls surrounding the switchgear rooms. In Amendment No. 13 to the FSAR, the applicant identified some of these walls as 3-hour and 1-hour rated. The 3-hour walls and floor/ceiling assemblies in these areas meet the guidelines of Section D.1 of BTP APCSB 9.5-1 and are, therefore, acceptable. Because the fire severity is less than 30 minutes, as determined by the ASTM Standard E 119 time-temperature curve, and because these fire areas are protected by early warning fire detectors and a total-flooding carbon dioxide fire suppression system, the staff concludes that the 1-hour fire-rated walls will provide reasonable assurance that the effects of a fire are confined within one switchgear room pending fire extinguishment by either the automatic fire suppression system or the plant fire brigade. The staff, therefore, concludes that the 1-hour and 2-hour fire-rated construction represents an acceptable deviation from the above-referenced guidelines.

Other Plant Areas

In Supplement No. 6 to the SER, the staff stated that the applicant would provide ventilation in the flammable gas storage room on elevation 140 ft of the auxiliary building in accordance with NFPA Standard No. 51. By letter dated December 17, 1984, the applicant confirmed that ventilation was provided for this room per the referenced standard. Therefore, the action has been completed.

In Amendment No. 13 to the FSAR, the applicant indicated that the controls for the normal ventilation for certain fire areas are not located outside of the fire area served by the system. However, loss of these controls will not affect the ability to shut down the plant. In addition, to facilitate firefighting operations by the fire brigade, portable smoke ejectors will be used in conjunction with functional ventilation systems in adjoining fire areas. The venting of smoke and hot gases from the fire area into adjoining plant locations will also not affect safe shutdown systems that may be relied upon in these locations

to maintain the plant at safe shutdown. The staff, therefore, concludes that this condition represents an acceptable deviation from Section D.4(c) of Appendix A to BTP APCSB 9.5-1.

In Amendment No. 13 to the FSAR, the applicant identified a potential deviation from Section F.16 of the staff guidelines to the extent that they require portable fire extinguishers and local standpipe outlets for locations that contain tanks supplying water for safe shutdown. The locations the applicant identified are all outdoor locations with no unmitigated fire hazard within 50 ft. Manual firefighting equipment is available from the hose houses described in Section 9.5.1.2. The staff, therefore, concludes that no deviation exists.

Amendment No. 13 to the FSAR identifies a number of locations where small quantities of isolated combustible materials, such as cables, are located above suspended ceilings. This represents a deviation from Section D.1.f of Appendix A to BTP APCSB 9.5-1, which stipulates that concealed spaces be devoid of combustibles. In non-safety-related areas, the presence of these combustibles represent no significant fire hazard because of the limited amount and because if they caught fire they would not threaten safety-related equipment. In safety-related areas, at most, only one shutdown division would be exposed to damage, and the applicant has committed to install fire detectors in the concealed space (refer to Section 9.5.1.2 of this supplement for the evaluation of this commitment). Therefore, there is reasonable assurance that if these combustibles were ignited, the fire would be detected and suppressed at an early stage before significant damage occurs. The staff concludes, therefore, that this condition represents an acceptable deviation from Section D.1.f of the guidelines.

In Amendment No. 13 to the FSAR, the applicant provided a revised safe shutdown analysis for the main steam support structure (MSSS). On the basis of this re-analysis, the applicant indicated that a postulated fire in either Zone 74A or 74B of the MSSS can result in the loss of operability of both atmospheric dump valves (ADVs) associated with one steam generator due to actuator, solenoid valve, or pneumatic supply accumulator damage. However, cold shutdown can be obtained by manual operation (via a handwheel) of one of the affected ADVs. Alternately, there are two other flowpaths which could also restore a heat-removal mechanism to allow the operator to achieve cold shutdown within 72 hours. This is accordance with the technical requirements of Section III.G of Appendix R and is, therefore, acceptable.

The applicant also requested approval for a deviation in the condensate storage tank pump house from the technical requirements of Section III.G to the extent that it requires a 3-hour-rated fire wall between redundant shutdown divisions. The concrete wall between the two condensate transfer pumps does not completely separate the pumps. The wall extends from the pumphouse west wall to a point just past the pump foundation. However, the applicant has identified an alternate makeup path for the cooling water system and has developed procedures to make repairs on fire-damaged systems such that cold shutdown can be achieved within 72 hours. This conforms to the requirements of Section III.G of Appendix R.

9.5.1.6 Fire Protection for Safe Shutdown Capability

In Supplement No. 6 to the SER, the staff evaluated certain deviations from the technical requirements of Section III.G of Appendix R pertaining to the protection of redundant shutdown systems in the auxiliary building. In Amendment No. 13 to the FSAR, the applicant requested approval for additional deviations to the extent that Section III.G requires that redundant shutdown divisions be: (1) separated by 3-hour fire barriers; or (2) separated by 20 ft free of combustible material and protected by a fire detection and a fire suppression system; or (3) separated by a 1-hour fire barrier and protected by a fire detection and fire suppression system.

In general, the plant locations where these deviations are located can be characterized by a low in situ fire loading, with combustible materials dispersed throughout the area. In locations where concentrated combustibles or a significant fire hazard exists, the hazard is mitigated by the presence of an automatic fire suppression system. These areas also have large floor-to-ceiling heights and large room volumes, which means that the effects of a fire, such as smoke and hot gases, will be dissipated.

In some locations, such as an elevation 51 ft 6 in. of the auxiliary building, the separation between redundant shutdown systems is greater than 80 ft. The area is completely protected by a fire detection system and manual firefighting equipment. Because of the large separation distance, the low fire loading and existing fire protection, there is reasonable assurance that one division will remain free of fire damage until the fire is extinguished by the plant's fire brigade.

In other locations, such as Zones 46A and 46B (elevation 100 ft in the auxiliary building) the straight-line-separation distance between redundant systems is less than 20 ft. However, floor-to-ceiling masonry cubicle walls partially enclose the systems. These walls would act to confine the fire so that not more than one division would be damaged. The areas are also protected by automatic fire suppression and detection systems. These systems provide reasonable assurance that any potential fire will be detected early and either suppressed automatically or manually by the fire brigade.

In certain locations, such as in elevation 120 ft of the auxiliary building, separation of redundant shutdown-related cables and components is approximately 20 ft or more. The areas are protected by a partial sprinkler system, which covers at least one division, and a complete fire detection system. The applicant has installed a 1-hour fire-rated barrier around one division of cables. The remaining systems consist of tanks and piping which are not readily damaged by fire. Because of the fire detection system, the staff expects a potential fire to be detected early and suppressed manually by the fire brigade. If rapid fire propagation occurs, the sprinkler system will actuate and either control the fire or discharge water onto one division of shutdown systems. The 1-hour fire barrier and the substantial construction of the rest of the shutdown components in the area will achieve a degree of passive protection sufficient to provide reasonable assurance that safe shutdown capability can be maintained free of fire damage.

The applicant has also analyzed the consequences if vertical fire propagation did occur in places where floor/ceiling assemblies do not form a continuous fire

barrier. At least one division would remain free of fire damage. Alternately, the applicant has upgraded the floor/ceiling assembly in such a manner that this assembly forms a continuous barrier between one elevation and the next. In some cases, such as between elevation 120 ft and 140 ft of the auxiliary building, the vertical fire barrier is not completely fire rated, such as at a steel hatchway. However, because of the existing fire protection features (fire detection, partial fire suppression, manual firefighting equipment) and the low fire load, it is the staff's judgment that the non-fire-rated construction will withstand the effects of a fire until the fire is extinguished.

The staff, therefore, concludes that although deviations have been identified in Amendment No. 13 to the FSAR, the fire protection capability for safe shutdown achieves an acceptable level of safety comparable to that achieved by full compliance with Section III.G of Appendix R.

Alternate Shutdown

By letters dated September 26 and October 5 and 16, 1984, the applicant submitted the results of its spurious actuation analyses for a fire in the control room or outside of the control room. Because of several concerns raised during the staff's review of these reports, the applicant provided revisions to these documents by a November 13, 1984, letter.

In determining the ability of the plant to be safely shut down in the event of a fire, the applicant analyzed the effects of fire-induced hot shorts, open circuits, and shorts to grounds on safe shutdown capability. For the fire outside of the control room, the evaluation was performed for each fire zone identified in the submittal; for the control room fire the study considered only the electrical circuitry in the control room. Both analyses were performed for situations with and without offsite power.

Once a given spurious operation was identified, whether action or inaction of a component, the applicant determined what capabilities would be available to the operator which would assist in the identification and mitigation of the undesirable event. In addition, any time constraints that affected rectification of unwanted plant conditions were quantified. Next, those actions necessary to prevent the spurious operation were detailed along with any compensatory measures needed to implement the corrective actions.

The results of the above process yielded those areas of the plant where either manual actions were acceptable or where design changes, such as rerouting or protecting cables, were necessary. In those instances where operator actions are needed, the applicant will identify those requirements in the plant procedures or fire strategy book.

On the basis of its review of the methodology used by the applicant to determine those spurious operations resulting from a fire outside of or in the control room, the staff concludes that the PVNGS 1-3 design conforms to the technical requirements of Section III.G and III.L of Appendix R to 10 CFR 50.

During its review the staff noted that several fire areas, systems, or evaluation findings had been deleted in a November 13, 1984, submittal (Revision 1 to the reports) without justification. In response to staff questions, the applicant stated in a letter dated December 7, 1984, that Fire Areas 1, 2, 3A, and

3B, all of which involved spurious operation of the essential chilled water expansion tank level control valve, were removed because a hydraulic analysis demonstrated that the discharge pressure of the condensate transfer pump could not lift the chilled water system relief valves; therefore, this was not a credible release path. This analysis also accounted for the removal of the chilled water expansion tank from several evaluation findings contained in the November 13, 1984, submittal.

On the basis of its review of the above information and the information contained in the December 7, 1984, letter, the staff concludes that the applicant has acceptably addressed all deviations between the original and revised versions of the reports.

During the course of the review, the staff expressed a concern that multiple high impedance faults could result in the loss of the necessary power supply for safe shutdown equipment. The effects of multiple high impedance faults occur when several circuits from a common bus are located in the same fire area. When a fire occurs in this area, it can cause faults in these circuits, but the faults may not be of low enough impedance to trip the individual breakers. However, the sum of the faults (low impedance) may trip the main breaker which protects the power supply of the bus. If safe-shutdown equipment is energized from the same bus, once the main breaker trips, the equipment has lost its power source.

During discussions with the applicant on December 18, 1984, the applicant confirmed that its previous cable separation analysis demonstrates that for a fire in any one area, multiple high-impedance faults may affect only one division. However, the second electrical train is available to ensure power to safe-shutdown equipment. On the basis of the review of this information, the staff concludes that the applicant has acceptably demonstrated that multiple high impedance faults are not a concern in the PVNGS 1-3 design.

As a further result of the spurious actuation and associated circuits analyses, the applicant committed to implement a number of modifications to satisfy the staff's guidelines or to mitigate staff concerns. These commitments are contained in letters dated October 2 and November 13 and 21, 1984. All work will be completed by April 1, 1985. Implementation of these modifications prior to low power operation is not necessary because only small quantities of radionuclide inventory will exist in the reactor coolant system and, therefore, will not affect the health and safety of the public. Pending completion of these modifications, the applicant will establish an hourly fire watch in all the affected areas. This measure provides reasonable assurance that if a fire should occur, it will be detected and suppressed in its initial stages before significant damage occurs. On the basis of the applicant's commitments and the interim fire protection measures, the staff concludes that the requirements of GDC 3 have been met and are, therefore, acceptable.

In updated responses to Questions 9A.74(12), 9A.92 and 9A.92(19e) provided in the FSAR, the applicant identified a number of shutdown-related circuits that will be rerouted in PVNGS Units 2 and 3, in lieu of protecting them with a fire-rated barrier as was done in PVNGS Unit 1. Because these cables will be physically and electrically independent of the fire area, the separation of these cables will meet the requirements of Section III.G of Appendix R and is, therefore, acceptable.

In Supplement No. 6 to the SER, the staff had completed its review of the remote shutdown panel for alternative shutdown capability. To provide added confidence that a source range neutron flux monitor is not necessary on the remote shutdown panel, the applicant stated that it would perform a confirmatory probabilistic risk assessment (PRA) analysis of an uncontrolled boron dilution while maintaining plant shutdown from outside the control room. By letter dated October 31, 1984, the applicant submitted the results of the PRA, thus fulfilling its commitment.

9.5.1.10 Summary of Deviations From Appendix A to BTP APCSB 9.5-1 and Appendix R to 10 CFR 50.

In Supplement No. 6 to the SER, the staff approved the following deviations from the fire protection guidelines. The section of Supplement No. 6 in which each deviation is evaluated is shown after each item.

(1) The use of 125-ft lengths of fire hose (9.5.1.2)
(2) No fire detectors in areas containing safety-related equipment as delineated (9.5.1.2)
(3) Removable block fire walls (9.5.1.3)
(4) Unprotected penetrations in fire barriers as identified (9.5.1.3)
(5) Unprotected structural steel as delineated (9.5.1.3)
(6) Unlisted watertight doors in the fire barrier as listed (9.5.1.3)
(7) Equivalent fire doors in fire barriers as delineated (9.5.1.3)
(8) Intervening combustible materials between shutdown divisions in containment (9.5.1.5)
(9) Lack of area-wide fire suppression at elevation 100 ft of the auxiliary building (9.5.1.6)
(10) Discontinuous fire wall at elevation 70 ft of the auxiliary building (9.5.1.6)

On the basis of the review of the new information supplied by the applicant since issuance of Supplement No. 6 to the SER, the staff concludes that the following deviations are also acceptable. The section of this supplement in which each item is evaluated is shown after each item.

(11) The use of 125-ft and 150-ft lengths of fire hose (9.5.1.2), which supersedes item 1 above
(12) The presence of 1- and 2-hour fire-rated walls and unrated fire area boundary construction as delineated (9.5.1.3 and 9.5.1.5)
(13) Absence of signs on outside post indicator valves (9.5.1.2)
(14) The non-standard design of the standpipe system (9.5.1.2)
(15) The absence of sprinkler protection in the areas of cable concentration as identified (9.5.1.2)
(16) The non-standard design of the water spray systems as described (9.5.1.2)
(17) Non-fire-rated seals at seismic gaps (9.5.1.3)
(18) Non-fire-rated containment boundary penetrations (9.5.1.3)
(19) Non-standard installation of fire dampers (9.5.1.3)
(20) The design of fire protection for the day tank in the diesel generator rooms (9.5.1.5)
(21) Lack of fixed fire suppression system in the control room (9.5.1.5)
(22) Local controls for ventilation systems (9.5.1.5)
(23) Combustibles above suspended ceilings as described (9.5.1.5)
(24) Deviations from Section III.G of Appendix R in other plant areas (9.5.1.6)

10 STEAM AND POWER CONVERSION SYSTEM

10.3 Main Steam Supply System

10.3.3 Secondary Water Chemistry

In the PVNGS 1-3 SER, the staff identified a condition for inclusion in the operating license for PVNGS 1-3 dealing with the secondary water chemistry monitoring and control program. Upon further review, the staff has determined that this condition is more appropriate for, and has been inserted into, the Technical Specifications. Therefore, a license condition is not necessary.

10.4 Other Features of the Steam and Power Conversion System

10.4.7 Condensate and Feedwater System

In the SER, the staff identified a condition for inclusion in the operating license for PVNGS 1-3 dealing with a test to demonstrate that a damaging feedwater/steam generator water hammer will not occur. Upon further review, the staff has determined that the test is already included in the applicant's initial test program. Since the license will contain a condition regarding performance of the initial test program, a specific condition for the water hammer test is not necessary.

10.4.9 Auxiliary Feedwater System

By letter dated November 5, 1984, the applicant identified a change in the net flowrate for each auxiliary feedwater (AFW) pump from 875 gpm to 750 gpm based on the results of AFW system preoperational testing on PVNGS Unit 1. The applicant indicated that this flowrate was sufficient to satisfy decay heat removal requirements for all affected design-basis accidents assuming any single active failure. The applicant indicated that the accident analyses have been revised to reflect this change. The staff finds this change to be acceptable. Refer to Section 15 of this supplement for further discussion.

11 RADIOACTIVE WASTE MANAGEMENT

The staff's completed review of the radioactive waste management program was presented in the PVNGS 1-3 SER. Subsequently, by letter dated October 12, 1984, the applicant revised its commitment to Regulatory Guide 1.143, "Design Guidance for Radioactive Waste Management Systems, Structures and Components Installed in Light-Water-Cooled Nuclear Power Plants," Revision 0, by taking five technical exceptions to the regulatory positions in the guide. The following discussion identifies the exceptions taken and provides the staff's evaluation for each one.

(1) Contrary to Regulatory Position C, Paragraph 1.1.3, the turbine building which houses the steam generator blowdown system has no means of containing the maximum liquid inventory contained in the steam generator blowdown system.

The only major component in the steam generator blowdown system which will contain radioactive liquid is the steam generator blowdown flash tank. The tank is expected to contain 5,230 gallons of blowdown water with a maximum radioactivity content of 0.46 Ci, excluding tritium (FSAR Table 12.2-3). In the SER, the staff evaluated the consequences of failures of tanks located outside the containment, which could result in releases of liquids containing radioactive materials to the environs. For the source, the staff used the radioactive inventory of the 5,000-gallon concentrate monitor tank containing 9.5 Ci (excluding tritium) of evaporator concentrates from the shim bleed and equipment and reactor drain tanks, and determined that a failure of this tank would not result in concentrations at the nearest site boundary greater than 1% of the applicable 10 CFR 20 limits.

Therefore, the staff concludes that the failure of the steam generator blowdown tank with 0.46 Ci of radioactivity and subsequent release of the tank content from the turbine building to the environs will not exceed 1% of the applicable 10 CFR 20 limits. As a result, the staff finds this technical exception to be acceptable.

(2) Contrary to Regulatory Position C, Paragraph 1.2.1, high-level alarms on tanks in the radwaste building alarm in the radwaste control room instead of in the main control room. A common radwaste alarm sounds in the main control room for any alarm that exists in the radwaste control room. No tank has a local alarm, as the tank overflows are hardpiped to sumps avoiding local uncontrolled spillage.

The radioactive waste drain system within the radwaste building consists of, among other things, one 1,250-gallon-capacity sump with two 50-gpm sump pumps. The maximum overflow rate from a tank in the radwaste building is expected to be less than 150 gpm, based on the liquid waste input rates into the tanks. The sump pumps are operated automatically under control of level switches.

The staff concludes that the radwaste drain system in the radwaste building is capable of handling inadvertent tank overflows until the plant operator attends the radwaste control room alarm (within less than 5 minutes) upon receiving a common radwaste alarm in the main control room. Therefore, the staff finds this technical exception to be acceptable.

(3) Contrary to Regulatory Position C, Paragraph 1.2.3, the blowdown flash tank (SCN-X01) in the turbine building does not have an elevated threshold to catch potential leakage.

The floor drain system in the turbine building consists of, among other things, a 2,600-gallon-capacity sump and two 50-gpm sump pumps. The maximum normal leakage to the turbine building sump is estimated to be 170 gpd. Sump pumps, operating automatically under control of level instrumentation in the sump, pump the collected wastes from the sump into a common discharge header. The discharge header normally conveys the wastes to the turbine building oil/water separator, but lines are provided for diverting the flow to either the chemical waste neutralizer tank or to the liquid radwaste system holdup tanks when required by the presence of chemicals or radioactivity in the wastes. The staff finds that the drain system meets the intent of Regulatory Position C.1.2.3 and, therefore, this proposed exception is acceptable.

(4) Contrary to Regulatory Position C, Paragraph 4.4, which provides that the system be pressure tested for 30 minutes at the design pressure, the testing is conducted at 1.5 times the design pressure for 10 minutes, as required by the applicable ASME and ANSI codes.

Testing per applicable code requirements results in a higher test pressure for a shorter period of time than is recommended by the regulatory guide. The staff finds this proposed exception to be acceptable.

(5) Contrary to Regulatory Position C, Paragraph 5.2.4, which provides that load factors and load combinations to be used for concrete structures should be those given in ACI Standard 349, ACI Standard 318 will be used.

Regulatory Guide 1.143, Revision 1 (1979), requires that the design be in accordance with ACI Standard 318. Therefore, the staff finds the proposed exception to Regulatory Guide 1.143, Revision 0, to be acceptable.

11.2 System Description and Evaluation

11.2.3 Solid Radioactive Waste Treatment System (SRS)

In a letter dated December 10, 1984, the applicant submitted draft proposed FSAR changes identifying capabilities to use portable radwaste solidification systems and deleting use of the crud filter subsystem by deleting the backflushable purification filter. The staff finds these changes acceptable.

12 RADIATION PROTECTION

In two letters dated December 10, 1984, the applicant proposed changes to the FSAR regarding the radiation protection program design features and radwaste systems and effluent streams. The staff's review of the changes is presented below.

Some of the proposed FSAR revisions will definitely result in lower occupational radiation exposures, such as the addition of "package units," which are skid mounted with all motors and pumps located on the periphery at the skids for ease of access and for quick removal to low-radiation area for maintenance and repair. Package components have provisions for draining, flushing, and chemical cleaning.

It is expected that the other proposed revisions will not affect personnel exposures significantly. These include: (1) the deletion of continuously sloped piping in the direction of flow, because spent resins are transferred by pump closed circuit, by sluicing process, and not by gravity (for those horizontal lines that were not sloped, it was either impractical, because of construction interferences, or they were drainable without vertical drop); (2) the use of grafoil or graphite yarn packing in valves instead of a double set of packing (superior to conventional packaging); and (3) the use of remotely replaceable cartridge filters instead of back flushable filters. Because the cartridge filter can be remotely replaced and handled, it is expected that increased personnel exposure as a result of this operation will be insignificant.

The staff concludes that the savings of personnel exposures from packaging of units (skid-mounted system components) will greatly outweigh the possible increase in personnel exposure from the use of cartridge filters which probably will require more frequent replacement.

Therefore, the staff finds these changes acceptable.

13 CONDUCT OF OPERATIONS

13.1 Organizational Structure and Qualifications

13.1.1 Management and Technical Resources

13.1.1.1 General

The applicant has implemented a number of changes in organizational structure since issuance of the PVNGS 1-3 SER in November 1981. Figures 13.1 through 13.3 in this section replace Figures 13.1 through 13.4 of the PVNGS 1-3 SER and reflect these organizational changes. This supplement addresses these changes as described through Amendment No. 13 to the Final Safety Analysis Report (FSAR) and considers the acceptability of the changes with respect to regulatory guidance. In addition, a number of individuals mentioned by name in the original SER no longer occupy the positions as specified at that time. The staff's review, however, indicates that the present incumbents of these positions satisfy the qualification requirements stated in ANSI/ANS Standard 3.1-1978, "Selection and Training of Nuclear Power Plant Personnel." For positions not covered by this standard, the staff's review indicates the qualifications of the present incumbents of these positions are appropriate to the responsibilities assigned and are acceptable.

13.1.1.2 Corporate Organization

The corporate structure of Arizona Public Service Co. (APS) has been significantly revised since the SER was issued (Nov. 1981). In the new organization (see Figure 13.1) overall responsibility and authority for the operation and technical support of Palo Verde Nuclear Generating Station, Units 1, 2, and 3 is vested in the Executive Vice President, Arizona Nuclear Power Project (ANPP). This individual reports directly to the Chief Executive Officer of the applicant's organization. The change in organization has also resulted in the consolidation of substantially all nuclear activities in the ANPP and the exclusion of substantially all non-nuclear activities.

This change, therefore, conforms to the guidance given in NUREG-0800, page 13.1.1-6, which states:

> A corporate officer should be clearly responsible for nuclear activities, without having ancillary responsibilities that might detract from his attention to nuclear safety matters.

In the SER, the staff had expressed concern because the applicant's organization at that time did not satisfy the above guidance. In response to the staff's concern, the applicant had implemented corporate policies giving priority to nuclear safety matters. Because of the importance of these policies with respect to the organization existing at that time, the SER stated the staff would make adherence to these policies a condition of the operating license.

The current organization corrects the fundamental condition forming the basis for the staff's earlier concern. Therefore, because the new nuclear organization does not have significant ancillary functions which would detract from consideration of nuclear safety matters, and because the corporate officer in charge of nuclear activities reports to the highest management level, the staff concludes that the new organization conforms to regulatory guidance. Accordingly, the staff finds this change in organization acceptable, and based on this new organization, concludes that a license condition relating to management policies and priorities is no longer required.

As a result of the above reorganization, the following individuals now report to the Executive Vice President (EVP), ANPP:

- Vice President, Nuclear Production
- Manager, Corporate Quality Assurance
- Director, Project Services

One of the additional effects of the restructuring, therefore, has been to consolidate the responsibilities for nuclear operations and construction in one individual, and place some of the administrative and technical duties previously associated with these separate positions in a newly formed Project Services department. In addition, the quality assurance function has been elevated to a position at the same level as that of the Vice President, Nuclear Production. The applicant has also assigned an Assistant Vice President to aid the Vice President, Nuclear Production, in performing the combined operations and construction responsibilities, as discussed in the applicant's letters dated February 6, 1984, and July 2, 1984.

The organization of the Vice President, Nuclear Production, is shown in Figure 13.2. Although the new organization imposes significant construction and operations responsibilities on a single individual (the Vice President, Nuclear Production), the applicant has taken steps to address this matter. These include removing some administrative and technical duties, and appointing an Assistant Vice President, as noted above.

As shown in Figure 13.2, other positions reporting to the Vice President, Nuclear Production, are the Director of Nuclear Operations, the Director of Technical Services, the Transition Manager, and the Nuclear Safety Manager. The functions reporting to the Directors of Nuclear Operations and Technical Services, are also shown in Figure 13.2.

The Transition Manager is responsible for the startup program, for setting construction priorities to meet the startup schedule, for completing systems prior to transfer to Operations, and for supporting Operations to full power.

The Manager, Nuclear Safety, is responsible for directing the activities of the Nuclear Safety Group (NSG) and the Independent Safety Engineering Group (ISEG), and for making recommendations which would improve the margin of safety.

The staff notes that the creation of the position of Manager, Nuclear Safety, is a significant change from the organizational structure previously reviewed. In the previous organization, the ISEG function was combined with the Shift

Technical Advisor (STA) function, and this STA/ISEG organizational unit reported to the onsite Engineering and Technical Services Manager (now Technical Support Manager), who in turn reported to the Manager (now Director) of Nuclear Operations. The present organization separates these functions, so that the STA function is a separate organizational unit which still reports to the onsite Manager, Technical Support; the ISEG organizational unit now reports to the offsite Manager, Nuclear Support, who in turn reports to the Vice President, Nuclear Production.

In its earlier review, the staff had expressed concern regarding the objective processing of safety findings by the ISEG because the ISEG reported only to an onsite organization, and had no required direct reporting path to a high-level official in an offsite organization. As a result of this earlier concern, the applicant had issued a corporate policy addressing this matter which was acceptable to the staff. Because this concern was only addressed by the corporate policy, however, the staff stated in the SER that a license condition should be imposed requiring adherence to the policy. The present change in organization relative to the ISEG, together with other changes in the applicant's organization, satisfactorily addresses the staff's previous concern with regard to this matter. Accordingly, the staff concludes this element of the change in the applicant's organization is acceptable, and that a license condition relating to the requested corporate policy is no longer required.

In the SER, the staff also expressed reservations concerning the existing organization because it would require the Operations organization to obtain the bulk of its engineering support from the separate Construction organization. This was resolved at the time by implementing a corporate policy giving high priority to technical resources needed to address safety-related matters originating within the Operations organization. Because of its concern regarding this organizational structure, the staff indicated its intention to make adherence to this corporate policy a condition of the license.

The staff finds the new organization functionally implements this policy by placing the Director, Nuclear Operations, at a higher management level than either the Manager, Nuclear Engineering, or the Manager, Nuclear Construction. In addition, the Director, Nuclear Operations, has direct access to the Vice President, Nuclear Production. On the basis of this new structure, the staff concludes the Operations organization has ensured priority access to technical resources needed to address safety-related matters. Accordingly, the staff concludes that a license condition requiring adherence to a corporate policy addressing this matter is no longer needed.

The new organization also satisfies the goal of an integrated nuclear organization as recommended in Section II.B.1 of NUREG-0731, "Guidelines for Utility Management, Structure and Technical Resources," draft report for interim use and comment, September 1980. Accordingly, the staff finds this element of the reorganization acceptable.

13.1.1.3 Startup Organization

In addition to qualifying startup personnel on the basis of defined levels of education, training, and experience, as previously proposed, the applicant has modified his earlier policy to also permit qualification of additional startup

personnel, on a case-by-case basis, by written authorization from the Director of Nuclear Operations. In response to a staff request concerning the criteria used in such determinations, the applicant responded by letter dated October 2, 1984, that the following criteria will be used:

(1) amount of experience that the individual has (three months of experience will be required) with the equipment and instrumentation involved in the individual test or equivalent equipment and instrumentation, and

(2) completion of specific training on the performance of the individual test. A walkthrough in the field or on the simulator, directed by an individual who is qualified per the standard requirements.

In addition to the above, individuals will be considered for case-by-case qualification only for tests which are performed under normal plant operating conditions. For any test which initiates a plant transient or puts the plant in an unusual operating condition, the individual who directs or supervises the test will be qualifed to the standard requirements.

On the basis of the general training required for startup test personnel, the requirement that an individual satisfy the above criteria, and the applicant's commitment that a fully qualified shift test director will be available for consultation regarding the test, the staff concludes that the proposed basis for case-by-case approval of startup personnel not fully meeting the standard qualification requirements, is acceptable.

13.1.1.4 Offsite Technical Support

As noted in Section 13.1.1.2 above, major changes in the organizational structure have made offsite technical support more readily available to the Operations organization. This offsite support is now primarily provided by the Technical Services organization which reports to the Vice President, Nuclear Production. This organization includes Nuclear Engineering, Nuclear Fuels, Emergency Planning, Nuclear Construction, Licensing, and Records departments. The Nuclear Engineering Department provides the standard engineering disciplines (mechanical, electrical, civil, etc.) as well as the consultative services of the Corporate Health Physicist. Outside the ANPP organization, but within the APS organization of the Vice President, Engineering and Construction, are the resources of the fuel supply function of the Resources and Planning Department and the Risk Management Service Department (for additional fire protection support). The staff also notes that the applicant's projected staffing levels for offsite support have been increased. On the basis of the above, the staff concludes that the overall breadth and depth of offsite technical resources available to support operational needs, has not been diminished. Further, as a result of the more integrated structure provided by the currently described organization, the accessibility of these resources should be improved. Accordingly, the staff finds these elements of the revised organization acceptable.

13.1.1.5 Fire Protection

As a result of the reorganization, responsibility for the fire protection program at PVNGS 1-3 is now assigned to the Vice President, Nuclear Production. The staff concludes this does not constitute a significant change and, therefore, this element of the revised organization is acceptable.

13.1.1.6 Findings

The staff concludes that the changes in organization, as reflected through Amendment No. 13 to the FSAR, do not affect the staff's previous finding of acceptability with respect to the adequacy of the organization and offsite technical resources.

13.1.2 Operating Organization

13.1.2.1 Organization

A number of changes have been made in the structure of the operating organization since the staff's original review. These changes include (1) elevating the startup function so that it now reports through the Transition Manager to the Vice President, Nuclear Production, and (2) elevating the Site Quality Assurance function so it reports to the Director, Corporate Quality Assurance, which, in turn, reports to the Executive Vice President, ANPP. These changes reduce the number of managers reporting to the Director of Nuclear Operations (formerly Manager of Nuclear Operations) and allow these functions greater independence from operational-production considerations. The revised operating organization is shown in Figure 13.3.

Comparison of the old and new organizations shows that the applicant has also moved the security, fire protection, and training functions to a newly formed Plant Services Department, and placed operation of the Water Reclamation Facility under the direction of the new position of Operations Manager. An Outage Maintenance organization has been established, and the Manager of this function reports to the Director of Nuclear Operations. The net effect of all of the changes is to reduce to five, the number of managers reporting directly to the Director of Nuclear Operations. The changes, therefore, represent a significant improvement over the previously reviewed organization in which nine managers reported to the equivalent position. The five positions now reporting to the Director of Nuclear Operations are: Technical Support Manager, Operations Manager, Maintenance Manager, Plant Services Manager, and Outage Maintenance Manager.

As noted above, the applicant has established a position titled Operations Manager. This position provides management direction to the following positions: three Unit Operations Superintendents, the Operations Support Supervisor, and the Water Reclamation Facility Superintendent.

The Operations Manager position is similar to the previously described position of Operations Superintendent but with additional responsibilities for operation of the Water Reclamation Facility and for Operations Support.

Each unit of PVNGS will have a Unit Operations Superintendent. This individual is responsible for operating the assigned unit in a safe and efficient manner, and for supervising the activities of the unit's operating personnel. This position corresponds to the previously described position of Operating Supervisor.

A new position, titled Day Shift Supervisor, has been added for each unit. The individuals filling these positions are responsible to the respective Unit Operations Superintendents and assist in supervising the conduct of operations at the respective units.

The positions of Unit Shift Supervisor and positions below his have not been affected by organizational changes.

The previously identified position of Engineering and Technical Services Manager has been retitled Technical Support Manager. The general responsibilities and functions of this organizational unit were not significantly changed.

In another change, the duties of the Maintenance Manager have been broadened to include responsibility for maintaining the Water Reclamation Facility. A Maintenance Supervisor and approximately 47 maintenance personnel have been assigned to the Maintenance Manager's organization to implement this function.

The staff has not identified any instance in which the above changes in organization would adversely affect the ability of the applicant to safely operate and maintain the facility. Therefore, the staff's previous finding of acceptability is unchanged.

As noted earlier, the Corporate Quality Assurance Director now reports directly to the Executive Vice President, ANPP. The previously identified PVNGS Operations QA/QC Manager position has been replaced by two positions: Quality Control Manager and Quality Audit/Monitoring Manager. These positions report to the Corporate Quality Assurance Manager. This is a change from the organization previously reviewed in that the PVNGS Operations QA Manager previously reported to the Station Manager (Manager of Nuclear Operations). The staff concludes that this change strengthens the independence of the QA function and, therefore, this element of the revised organization is also acceptable.

13.1.2.2 Staffing Levels

In Amendment No. 13 to the FSAR, the applicant has updated the status of plant staffing. For most positions, staffing levels conform to or exceed the previously approved commitments made by the applicant. For ten job titles, however, the applicant had not yet achieved the specified minimum staffing levels. The deficient staffing ranges from 44% (16 of 36) for licensed reactor operators to 99% (67 of 68) for Water Reclamation Facility personnel. In terms of initial operation of a single unit, and subject to the availability of at least the number of licensed operators required by the facility license, the staff concludes that present staffing levels are adequate for initial operation of one unit. The staff further concludes that, subject to attaining the specified minimum staffing levels, and subject to continuing review of facility operations, adequate initial staffing is being provided.

13.1.2.3 Qualifications

Although position titles and individuals assigned to positions in the onsite organization have changed in some cases, the staff has not identified any significant changes in the qualifications of the onsite organization. Some of the specific changes made by the applicant are discussed below.

The position previously titled Operations Superintendent is now titled Unit Operations Superintendent. At a single-unit site, this position would normally report to the Plant Manager. Accordingly, this position should conform to the qualification requirements stated in ANS Standard 3.1, paragraph 4.2.2, "Operations Manager." Amendment No. 13 to the FSAR indicates that the applicant is taking exception to one of the qualification requirements for this position. However, in response to a question from the staff, the applicant has, by letter dated August 13, 1984, deleted this exception. Accordingly, the staff finds the qualifications specified for the position of Unit Operations Superintendent to be acceptable.

The new organization includes the new positions titled Day Shift Supervisor and Operations Support Supervisor. The applicant indicates in Amendment No. 13 to the FSAR, that the qualification requirements for these positions are those stated in paragraph 4.3.1 of ANS Standard 3.1 ("Supervisors Requiring NRC Licenses"). On the basis of the duties specified for these positions in the FSAR, the staff finds these qualification requirements appropriate and acceptable.

Inasmuch as there are no other significant changes in the qualifications of the onsite organization, the staff finds the qualifications requirements for the revised organization acceptable.

13.1.2.4 Operating Shift Crews

As a result of the Commission's concern about the possible lack of "hot" operating experience among the operators on shift at newly licensed nuclear power plants, dialogue with the industry was begun in late 1983 to find a way of ensuring that each operating shift at a newly licensed plant had at least one senior operator with previous hot operating experience. On February 24, 1984, an Industry Working Group, representing utilities with nuclear power plants under construction or ready for operation, presented a proposal to the Commission on the amount of previous operating experience considered to be the minimum desirable on each shift and how that experience could be obtained. On June 14, 1984, the Commission accepted the industry proposal with certain clarifications.

Information regarding the Commission action was forwarded to the industry as Generic Letter 84-16, dated June 27, 1984. The objective is that each operating shift will have at least one senior operator with a minimum of 6 months of hot operating experience on a similar type plant, including startup/shutdown experience and at least 6 weeks above 20% power. For plants in the late stages of licensing with insufficient time to meet the objective, the temporary use of experienced shift advisors is acceptable.

The applicant's plans and information regarding the operating experience of licensed operators, in response to Generic Letter 84-16, were submitted by letters dated March 23, 1984, September 12, 1984, October 25, 1984, and December 4, 1984. The latest submittal identifies the senior operators (shift supervisors and assistant shift supervisors) selected to supervise the six shift crews. As discussed below, the applicant has enough experienced senior operators to meet the operating experience requirements on at least five shift crews; shift advisors may be used on the sixth crew.

The hot participation requirements of Generic Letter 84-16 are to be met as follows:

(1) Two of the crews currently meet the requirements.

(2) Two additional crews will meet the requirements before initial criticality. One senior operator on each of these crews is scheduled for additional observation training at an operating pressurized-water reactor (PWR), after which these crews will meet the requirement for six months of hot participation experience on shift.

(3) The fifth crew currently meets the requirements if credit is given for the extensive operating boiling-water-reactor (BWR) experience of one of the senior operators. The individual in question has seven years of experience (including four years as Shift Supervisor) at a large operating BWR (Cooper), three years' preoperational experience as a Shift Supervisor at Palo Verde, 19 months' preoperational experience at another large PWR (Wolf Creek), Senior Reactor Operator (SRO) certification on the SNUPPS simulator, and 10 weeks' observer training at a larger PWR (ANO-1). By virtue of his extensive BWR and PWR supervisory experience and his familiarity with both preoperational and operational activities, the staff concludes that a shift advisor is not required for this crew.

(4) The sixth crew may or may not meet the guidelines of Generic Letter 84-16 before initial criticality. Two SRO candidates who have previous operating experience are in training but their licensing examinations are not scheduled until the second quarter of 1985. Therefore, to ensure the near-term availability of the sixth crew, the applicant plans to obtain and train two shift advisors. The staff evaluation of the Palo Verde shift advisor program will be required before the advisors can be used on shift. Therefore, the applicant should submit the information requested in Enclosure 2 of a May 29, 1984, letter from Darrell G. Eisenhut to E. E. Van Brunt, Jr. for staff review.

In conclusion, three shift crews currently meet the hot participation guidelines of Generic Letter 84-16, two additional crews will meet the guidelines upon completion of additional observer training, and the remaining crew is expected to need the services of a shift advisor. The applicant is requested to submit information on the shift advisor program for further evaluation in sufficient time to permit the staff to complete its review prior to initial criticality.

13.3 Emergency Planning

13.3.1 Introduction

The staff's evaluation of the Palo Verde Nuclear Generating Station Emergency Plan (PVNGS Plan) found in SER Supplement No. 5, dated November 1983, identified eight planning deficiencies requiring resolution. Revisions 3, 4, and 5 to the PVNGS Plan, the latest being dated August 1984, and various submittals identified in Section 13.3.2 below provided responses to resolve the eight remaining emergency planning deficiencies.

The additional information provided in the revised PVNGS Plan and submittals to the NRC has been reviewed against the requirements of 10 CFR 50.47(b) and Appendix E to CFR 50, and against Regulatory Guide 1.101, Revision 2, which endorses by reference the guidance criteria in NUREG-0654/FEMA-REP-1, Revision 1, dated November 1980. Section 13.3.2 presents the staff's evaluation of the emergency planning items requiring resolution. The order and numbering of the items listed in this supplement correspond to the listing of the items as they appeared in Appendix C to SER Supplement No. 1, dated February 1982, and subsequent supplements. The initial findings and determinations on offsite emergency preparedness by the Federal Emergency Management Agency (FEMA) are provided in Section 13.3.3. The staff's conclusions are provided in Section 13.3.4.

The onsite appraisal of the applicant's capability to implement the PVNGS emergency plan was performed during the period April 11 - May 23, 1983. The appraisal findings are contained in NRC's Inspection Report No. 50-528/83-14, dated August 10, 1983. Full participation exercises of the onsite and offsite emergency plans for PVNGS were conducted on May 11, 1983, and September 26, 1984. These exercises were observed and evaluated by both the NRC (on site) and FEMA (off site).

13.3.2 Evaluation of the Applicant's Emergency Plan

13.3.2.1 Emergency Preparedness Items That Have Been Resolved

This section identifies each emergency planning deficiency and the specific information that has been provided in the revised PVNGS Plan and submittals to resolve the deficiency.

B. Onsite Emergency Organization

(2) As identified in Supplement No. 5 to the SER, the PVNGS Plan did not adequately describe the onsite emergency organization, in particular the responsibility for initial emergency direction and control. Revision 3 to the PVNGS Plan, dated October 1983, and information in a letter from the applicant dated December 4, 1984, responded to this deficiency by clarifying the management control of emergency response. The Shift Supervisor of the affected unit is responsible for the initial classification and declaration of an emergency. For emergencies classified as a Notification of Unusual Event, the affected unit Shift Supervisor may, at his discretion, call the designated unaffected unit Shift Supervisor to assume the duties and responsibilities of the Emergency Coordinator in the affected unit. For emergencies classified as an Alert or higher, the designated unaffected unit Shift Supervisor is notified and reports to the control room of the affected unit where he assumes the duties and responsibilities of the Emergency Coordinator. Among the responsibilities of the Emergency Coordinator which may not be delegated is the decision to notify offsite authorities and to recommend protective actions to them. Should the designated unaffected unit Shift Supervisor be unavailable, the affected unit Shift Supervisor has the authority to function as the Emergency Coordinator.

The Shift Supervisor of the designated unaffected unit will be relieved of Emergency Coordinator responsibilities when the designated Emergency Coordinator, a member of station management, arrives and assumes control of the onsite emergency organization from the Technical Support Center. When the Emergency Operations Facility is activated, the Emergency Operations Director assumes overall command of the PVNGS emergency response effort including the responsibility for protective-action decisionmaking. The Emergency Coordinator remains in control of onsite emergency response actions. On the basis of a review of the revised PVNGS Plan, and the additional submitted information referred to above, the staff concludes that the applicant has provided a satisfactory response to this item.

(3) In Supplement Nos. 4 and 5 to the SER, the staff identified a deficiency regarding the applicant's augmented shift staffing for emergencies within the 30-minute and 60-minute time period goals specified in Table 2 of Supplement 1 to NUREG-0737 (also Table B-1 of NUREG-0654). The applicant subsequently provided additional information on shift staffing in a submittal to the NRC dated August 20, 1984 in which approval was requested for two temporary deviations from the augmentation goals in Table 2 of Supplement 1 to NUREG-0737. A meeting with the applicant on this subject was held on August 30, 1984. The applicant informed the staff that the temporary deviation from the 30-minute augmentation goal which involves health physics technicians and core/thermal hydraulics expertise would, with one exception, be limited to the period of operation of PVNGS Unit 1 from fuel loading through operation at power levels of 5% or less.

The temporary deviation from the 60-minute augmentation goal (to a 90-minute goal), due primarily to the remoteness of the site, would be limited to the period of operation of PVNGS Unit 1 from fuel loading until 18 months after operation of PVNGS Unit 1 at power levels greater than 5% is authorized or when a license authorizing fuel loading of PVNGS Unit 3 is issued, whichever is earlier.

The applicant has committed to compensatory measures including the addition of eight persons plus the Shift Supervisor of the designated unaffected unit (who assumes the position of Emergency Coordinator) to the shift staff (a total of 19 versus the required minimum of 10) as shown in Table 1 of the August 20, 1984, submittal. In addition, the applicant has committed to qualifying the senior radiation protection technician on shift to make dose assessments, activating key members of the emergency response organization upon the occurrence of a Notification of Unusual Event, providing the designated Emergency Coordinators and EOF Directors with radiotelephones in their automobiles, enhancing the automated early notification system by the distribution of pocket pagers to approximately 50 key members of the response organization, and fully activating the Corporate Emergency Center in Phoenix within 60 minutes of the classification of a Site Area or General Emergency.

Regarding the one exception to the 30-minute augmentation goal which involves an individual with core/thermal hydraulics expertise, the

applicant has committed in a submittal dated October 5, 1984, to provide such support within 30 minutes at an Alert or higher classification at the Corporate Emergency Center (CEC) by the Engineering Support, Reactor Analysis Staff. Engineering Support function personnel in the CEC will have available a computer capable of performing fuel and core analysis and a data link to the site. Core thermal analysis capability will be provided on shift by the Shift Technical Advisor as part of his accident assessment duties. The core/thermal hydraulics position will be staffed on site in the Technical Support Center within 90 minutes during the temporary deviation period and 60 minutes thereafter.

On the basis of the additional information provided in the August 20 and October 5, 1984, submittals and the applicant's commitments regarding the compensatory measures to enhance the effectiveness of the onsite emergency response organization, the staff finds that the applicant has provided an acceptable response to this planning deficiency and is making reasonable progress toward the staffing goals specified in Supplement 1 to NUREG-0737.

D. Emergency Classification System

(1) In Supplement No. 5 to the SER, the staff indicated that the applicant's emergency action level (EAL) and classification scheme was under review. This review, which has now been completed, included comments on the PVNGS emergency classification system described in Revision 4 to the PVNGS Plan and a meeting with the applicant on July 31, 1984, to discuss the staff's comments. Following this meeting, the applicant submitted Revision 5 to the Plan which addressed the staff's comments. A review of Revision 5 found the applicant's emergency classification system and EALs responsive to the staff's comments with one exception concerning the incorporation of dose rates measured in the plant environs as EALs into the emergency classification scheme. In a letter to the NRC dated October 5, 1984, the applicant committed to include appropriate site boundary dose rates measured with portable instrumentation as EALs in the emergency classification system.

The applicant's revised emergency classification system also indicates that for General Emergency situations, protective action recommendations will be based on plant and containment conditions and these recommendations will be made to offsite officials even when no release is in progress.

On the basis of a review of Revision 5 to the Plan, and the applicant's commitment to incorporate site boundary dose rates as EALs into the Plan, the staff finds that the applicant has provided a satisfactory response to this planning deficiency.

H. Emergency Facilities and Equipment

(2) In Supplement Nos. 4 and 5 to the SER, the staff identified a need for additional information concerning activation of the site Technical Support Center (TSC) and the flow of protective-action decisionmaking

responsibility from the control room to the Emergency Operations Facility (EOF). As indicated in Item B(3) above, technical support personnel will be available to staff the TSC within 90 minutes during the period of temporary deviation from the staffing augmentation objectives of Supplement 1 to NUREG-0737. At the end of this period (18 months after reaching 5% power in PVNGS Unit 1 or fuel loading of Unit 3, whichever is earlier), the TSC will be fully staffed within 60 minutes. The satellite TSC which is located adjacent to the control room is activated immediately upon declaration of an Alert or higher classification emergency and staffed within about 10 minutes by the onshift Emergency Coordinator (initially the Shift Supervisor of the designated unaffected unit), the Shift Technical Advisor, a communicator, and the senior radiological protection technician on shift.

The flow of protective-action decisionmaking responsibility is described in Revision 3 to the Plan and in a submittal dated August 20, 1984. In the event of an emergency, the Shift Supervisor of the affected unit is responsible for the initial classification and declaration of the emergency and assumes the responsibilities of the onshift Emergency Coordinator. The Shift Supervisor of the designated unaffected unit reports to the affected unit's control room/satellite TSC (within about 10 minutes) and assumes the responsibilities of the onshift Emergency Coordinator. Upon the arrival of a designated Emergency Coordinator from the onsite emergency organization, the emergency coordination functions are transferred to the site TSC. The Emergency Coordinator has the authority and non-delegable responsibility to notify and provide protective action recommendations to offsite authorities. Upon activation of the Emergency Operations Facility, the Emergency Operations Director assumes overall control of PVNGS emergency operations including the responsibility for providing protective action recommendations to offsite authorities. The Emergency Coordinator remains in the TSC and is in charge of onsite emergency operations. On the basis of the information in Revision 3 to the Plan and the August 20, 1984, submittal, the staff finds that the applicant has provided a satisfactory response to this item.

(3) In Supplement No. 5 to the SER, the staff identified the need for additional information concerning the potential for hills located about 5 miles west-north-west of the site to affect local meteorological conditions. In particular, the staff was concerned about the possible effect of the hills on the horizontal dispersion of a plume emanating from PVNGS. In a letter dated April 6, 1984, the applicant provided an evaluation which indicated that under the most restrictive atmospheric stability conditions, the hills could cause the plume to be transported to adjacent sectors for winds blowing in a westerly direction toward the hills. To address this possibility, the applicant will consider the two sectors on either side of the affected sector in making protective action recommendations. Emergency Plan Implementing Procedure 15 (EPIP-15), "Protective Action Guidelines," Revision 2, dated July 1984 has been revised to reflect this modification. The applicant states in the April 6, 1984, submittal that this approach has been discussed with the Arizona Radiation Regulatory Agency, the Arizona Division of Emergency Services, and the Maricopa

County Department of Civil Defense and Emergency Services. On the basis of the applicant's April 6, 1984, submittal and Revision 2 to EPIP-15, the staff finds that this item has been satisfactorily resolved.

I. Accident Assessment

(1) In Supplement Nos. 4 and 5 to the SER, the staff indicated a concern regarding the incorporation of plant sampling and monitoring data into the emergency assessment and response effort. Information in Revision 5 to the Plan, discussed in Item D(1) above, and in EPIP-14A, "Release Rate Determination", Revision 3, and EPIP-14B, "Initial Dose Assessment", Revision 2, indicates that plant sampling and monitoring data are utilized as emergency action levels to detect and classify emergencies and to assess the potential radiological consequences of accidents. On the basis of a review of Revision 5 to the Plan and EPIPs-14A and B, the staff finds that the applicant has satisfactorily addressed this item.

An additional item, not identified as a planning deficiency in Supplement No. 5, involves the applicant's dose assessment capability. The PVNGS emergency plan, Section 7.3.1.10, identifies the Chemical and Radiological Analysis Computer System (CRACS) as the primary system for accident assessment. In a letter dated December 3, 1984, the applicant informed the staff that CRACS is not expected to be functional until June 1985. During the interim period, the applicant will rely on a dose calculation computer program which is designed for use with available personal computers and on a hand calculation method in accordance with emergency plan implementing procedures EPIP-14A and EPIP-14B. The applicant's interim dose assessment capability was evaluated and found acceptable during the onsite appraisal of the PVNGS emergency program in April-May 1983 (NRC Inspection Report No. 50-528/83-14). The interim dose capability was used in lieu of CRACS in the PVNGS emergency plan exercise held on September 26, 1984 (NRC Inspection Report No. 50-528/83-37). On the basis of the observations made by the NRC during the onsite appraisal and the emergency plan exercise, the staff finds the applicant's dose assessment capability acceptable for use on an interim basis until CRACS becomes functional, and as a backup methodology thereafter.

J. Protective Response

(6) In Supplement No. 5 to the SER, and in a letter to the applicant dated July 27, 1984, the staff requested additional information concerning the applicant's evacuation time estimate study. In a submittal dated August 16, 1984, the applicant provided a revised PVNGS evacuation time analysis in response to the staff's request. Specifically, the analysis indicated that (a) the evacuation speed equation utilized in the study was a modified version of the formula found in the Federal Highway Administration Traffic Assignment Manual, (b) the modified formula is valid only when capacity exceeds demand, and (c) the length of an average vehicle and the separation per 10 miles/hour between vehicles was changed from 10 to 20 feet. The revised evacuation time

analysis will be incorporated into the state and county response plans. On the basis of the information provided in the August 16, 1984, submittal, the staff finds that the applicant has provided a satisfactory response to this item.

(9) The provisions for an alternate (offsite) assembly area in the event of an evacuation of onsite personnel was identified as a planning deficiency in Supplement Nos. 4 and 5 to the SER. Revision 3 to the PVNGS Plan identifies the Palo Verde Inn located approximately 8 miles northwest of the site near Tonopah, Arizona, as the primary offsite assembly area and the Hassayampa Pump Station located approximately 7 miles east of the site as the alternate offsite assembly area. On the basis of the information in Revision 3 to the plan, the staff finds that the applicant has provided a satisfactory response to this item.

13.3.2.2 Emergency Planning Items Related to Authorization for Fuel Loading and Low-Power Operation

E. Notification Methods and Procedures

The staff has confirmed that the PVNGS prompt notification siren system consisting of 37 sirens located in the populated areas in the plume exposure pathway emergency planning zone (EPZ) is installed and operational. This confirmation is based on information provided by the applicant in a submittal to the NRC dated December 4, 1984. This submittal indicates that a full-scale test of the siren system was conducted on September 10, 1983, and on October 24, 1984. Both of these tests were observed by FEMA. A report of the PVNGS alert and notification system including the siren test results will be provided at a later date by FEMA in the course of FEMA's review and formal administrative approval of offsite emergency preparedness under 44 CFR 350 of FEMA's rules.

G. Public Education and Information

The staff has confirmed that the PVNGS public information brochures and other educational material on emergencies has been distributed to the public within the plume exposure EPZ. As reported in NRC Inspection Report No. 50-528/83-14, dated August 10, 1983, the applicant's public education and information program has included mailings of the emergency brochures, open house presentations, a quarterly newsletter, inclusion of emergency information in the telephone book, posting of information in public areas, and presentations to various groups and organizations. An update on the applicant's public education and information program, including examples of various items disseminated to the public, was provided in a submittal to the NRC dated December 4, 1984. The staff has reviewed this material and finds that it is in conformance with the guidance in NUREG-0654.

13.3.3 Federal Emergency Management Agency Findings on Offsite Emergency Plans and Preparedness

FEMA reported on the status of offsite emergency preparedness for PVNGS 1-3 in a memorandum to the NRC dated November 28, 1984. The memorandum transmitted the FEMA exercise reports for the full-participation exercises conducted at the

PVNGS site on May 11, 1983, and September 26, 1984, and an assessment of the corrective actions accomplished by the State of Arizona following the initial exercise. FEMA stated that there is reasonable assurance that appropriate protective measures can be implemented by offsite jurisdictions around PVNGS 1-3 to protect the health and safety of the public in the event of a radiological emergency.

In the report to the NRC, FEMA indicated that the radiological response plans developed by state and local offsite jurisdictions for PVNGS 1-3 were still under review by FEMA Region IX and the Regional Assistance Committee. A favorable FEMA finding on plan adequacy in addition to the above finding on the capability of state and local emergency plans to be implemented, is required prior to operation above 5% of rated power. The NRC has formally requested a finding on plan adequacy and FEMA has indicated that such a finding will be provided on a schedule expected to preclude impacting full power authorization. The staff will report on this matter in a future supplement to the SER.

13.3.4 Summary and Conclusions

On the basis of the staff's review of the revised PVNGS Emergency Plan and the additional information and commitments provided by the applicant in the submittals discussed in Section 13.3.2 of the SER, the staff concludes that the level of onsite emergency planning and preparedness provides reasonable assurance that adequate protective measures can and will be taken in the event of a radiological emergency that may occur at PVNGS Unit 1 during full loading and low power operations; i.e., up to 5% of rated power. After receiving a finding from FEMA on the adequacy of state and local emergency plans, the staff will provide its conclusion on the overall state of onsite and offsite emergency preparedness in a future supplement to the SER prior to power ascension above 5% of rated power for PVNGS Unit 1.

13.4 Operational Review

13.4.1 Onsite Review

The applicant has revised the FSAR to include a general description of the composition, responsibilities, and operations of the onsite review committee (the Plant Review Board). The description generally follows current regulatory guidance for such committees (e.g., Section 6.5.1, "Standard Technical Specification for C-E PWRs"). Final details concerning the composition and functioning of this committee will be defined in a manner acceptable to the staff during development of the facility Technical Specifications. Accordingly, the staff finds the applicant's proposed implementation of the onsite review function acceptable.

13.4.2 Independent Review

The applicant has revised the planned implementation of the independent review function. Instead of utilizing a standing committee (the Safety Audit Committee) as previously described, the applicant now plans to utilize the Organizational Unit concept as described in paragraph 4.7 of ANSI/ANS Standard 3.1-1978 and paragraph 4.3 of ANSI Standard N18.7-1976. The group will be called the Nuclear Safety Group (NSG) and will consist of a minimum of four staff specialists and a supervisor. The NSG staff will have personnel from other APS organizations

and outside consultants available for consultation. The group will report through the Safety Manager to the Vice President, Nuclear Production.

Details concerning the composition and functioning of this group will be defined in a manner acceptable to staff during development of the facility Technical Specifications. Accordingly, the staff finds the applicant's currently proposed implementation of the independent review function acceptable.

13.4.3 Independent Safety Engineering Group

In the previous review of this activity, the Independent Safety Engineering Group (ISEG) functions were combined with those of the Shift Technical Advisors (STAs). With this arrangement, individuals performed ISEG duties when they were not on duty as STAs. As noted in paragraphs 13.1.1.2.9 and 13.1.2.2.2.4 of the FSAR, these functions are now separate, with ISEG and STA tasks performed by different groups of individuals.

The staff has reviewed the applicant's general description of the makeup, functions, and lines of communication of this newly formed group and finds these to conform to the NUREG-0737 requirements applicable to this item (I.B.1.2). The staff notes Item I.B.1.2 of NUREG-0737 states that the ISEG should report, "offsite to a corporate official who holds a high-level, technically oriented position that is not in the management chain for power production." The staff also notes that the ISEG reports to the Manager, Nuclear Safety, who in turn reports directly to the Vice President, Nuclear Production. On the basis that the Manager, Nuclear Safety, is located off site and is not in the management chain for power production, the staff concludes that this organizational structure is acceptable.

Final details concerning the composition and functioning of this group will be defined in a manner acceptable to the staff during development of the facility Technical Specifications. Accordingly, the staff finds the applicant's currently proposed implementation of the ISEG function acceptable.

13.6 Physical Security

Identification of Vital Areas

In Supplement No. 5 to the SER the staff noted that the applicant's vital area identification program did not completely satisfy current requirements. The applicant has since revised the facility's Physical Security Plan to satisfy the staff comments, and the program is now considered to be acceptable. Therefore, this issue has been resolved.

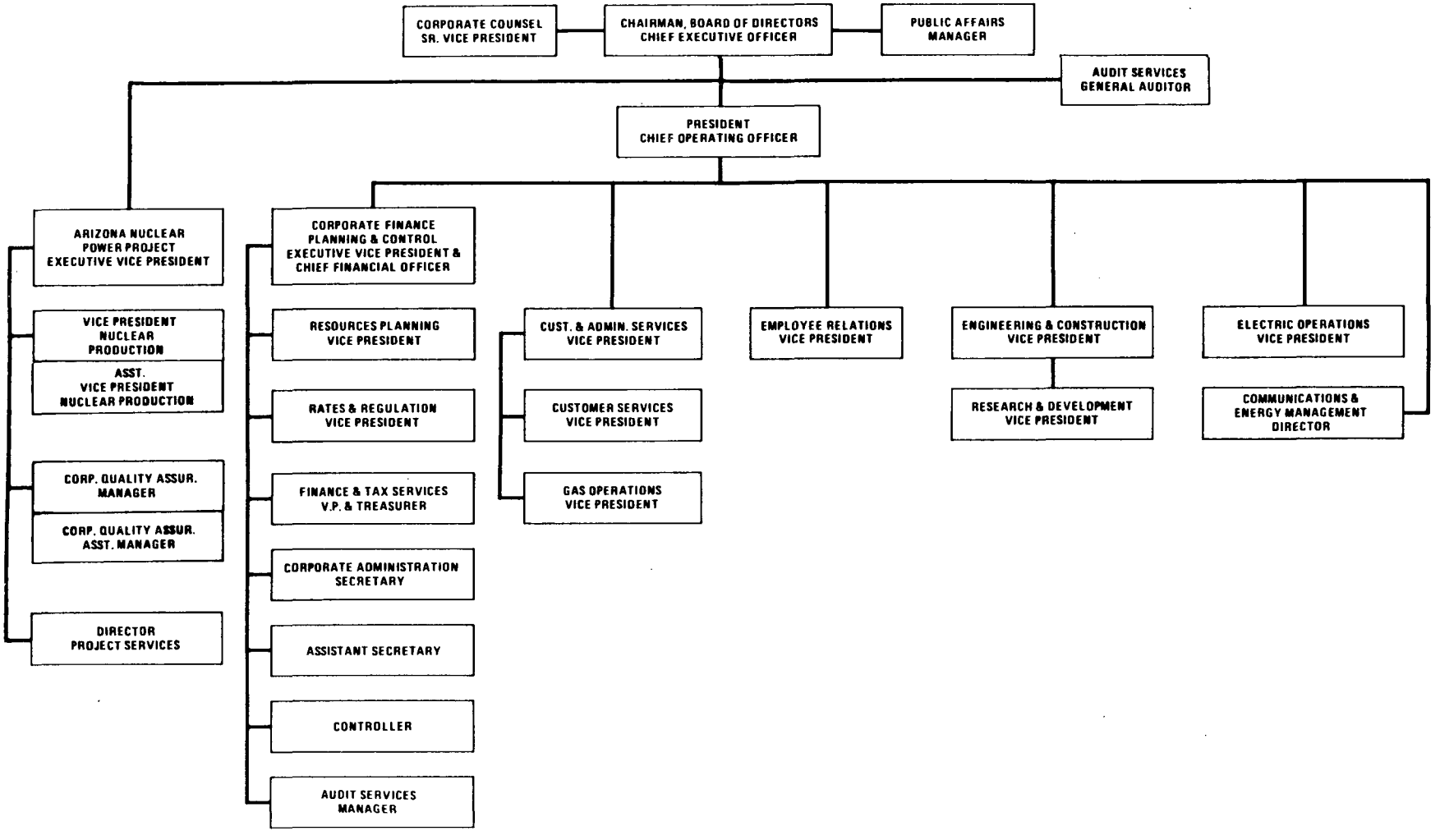

Figure 13.1 APS corporate organization

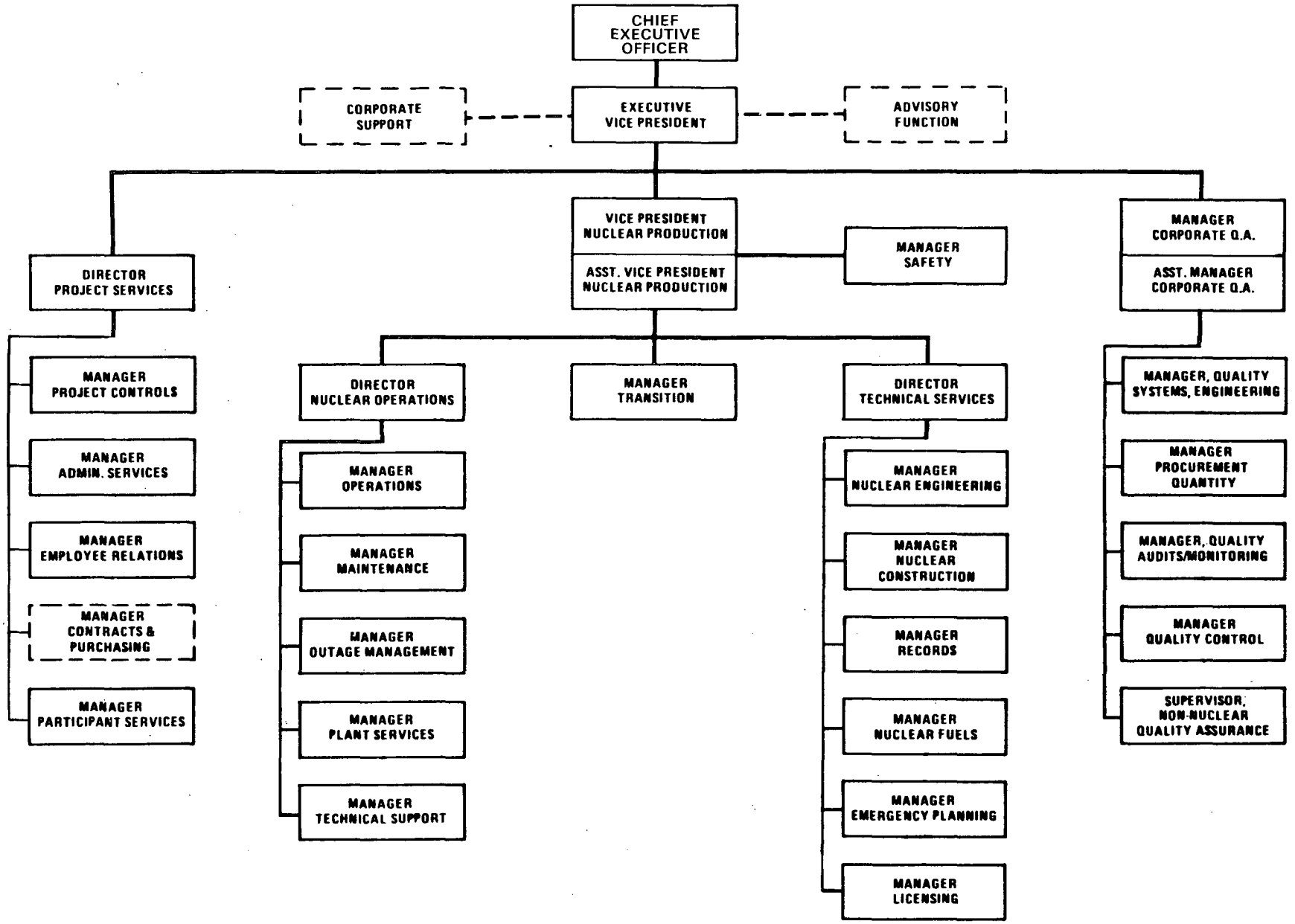

Figure 13.2 APS nuclear organization

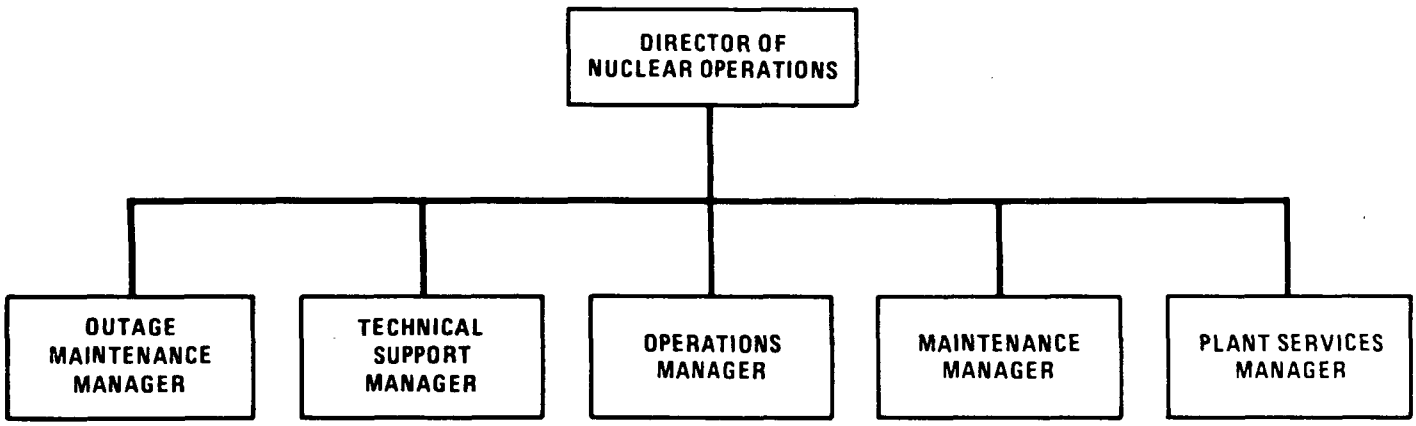

Figure 13.3 Nuclear operations organization

14 INITIAL TEST PROGRAM

In Supplement No. 6 to the PVNGS 1-3 SER, the staff stated that it was reviewing the updated test program description for the initial test program submitted by the applicant. As a result of its initial review of this submittal, the staff requested that the applicant provide additional information. The applicant's responses were provided by a letter dated July 3, 1984, and two letters dated October 15, 1984.

The requested information related to the following areas:

(1) A commitment for having startup test procedures available for NRC review.

(2) The method of performing 125-V dc power system test to ensure that all dc loads required for safe shutdown function properly at minimum battery terminal voltage.

(3) Administrative inconsistency related to certain FSAR figures.

In its responses, the applicant (1) committed to provide startup procedures 60 days before fuel load or 60 days before their actual use; (2) established the acceptability of the method to be used for performing the 125-V dc power system test, and (3) clarified the administrative inconsistency. The staff found the responses to be acceptable and concluded that the updated test program description for the initial test program is acceptable. Therefore, this matter has been resolved.

In addition, the applicant submitted a number of preoperational test description changes by letter dated October 29, 1984. These changes are of two types: (1) changes to bring the test description into conformance with the "as built" plant and (2) changes which clarify the intent of certain phrases and steps in some test descriptions.

The following test descriptions have changes that bring the test description into conformance with the as built plant:

(1) 14B.4 125-V dc power system
(2) 14B.46 Radwaste Bldg HVAC
(3) 14B.47 Turbine Bldg HVAC

The following test descriptions have changes that clarify items in the descriptions:

(1) 14B.13 Auxiliary Feedwater System
(2) 14B.38 Fire Protection System
(3) 14B.44 Containment HVAC-Tendon Gallery and Penetration
(4) 14B.49 Liquid Radwaste System

Since the test objective, methods, or acceptance criteria are not substantially changed in any of the above test descriptions, the staff finds the above changes to be acceptable.

In Supplement No. 6 to the SER, the staff stated that it was reviewing the resolution of problems encountered during preoperational testing with the reactor coolant system (RCS) pumps, low-pressure safety-injection (LPSI) pumps, thermowelds, thermal sleeves (liners), and control element assembly shroud.

The staff has now completed its evaluation of these component problems. The staff's evaluation included review of all reports submitted by the applicant on each problem (interim reports, final reports, and other supplemental documents) in addition to numerous meetings with both the applicant and nuclear steam supply system (NSSS) vendor to discuss the problem causes and solutions. The staff's findings for each component are summarized in the following discussions.

(1) Reactor Coolant Pump Failures During Hot Functional Testing

A number of hardware failures were discovered in the reactor coolant pumps (RCPs) at PVNGS Unit 1 following the pre-core hot functional test program. The major problem included diffuser and suction pipe retaining cap screws that were loose and/or broken, damage to the leading edge of the diffuser vanes because of cavitation, and broken impeller vane segments. These RCPs were supplied by Combustion Engineering (CE), were designed by Klein Schanzlin & Becker (KSB) of West Germany, and were manufactured and tested by CE-KSB in Newington, New Hampshire.

The failures associated with the diffuser, i.e., the bolted connections and the diffuser vane cavitation damage, were determined not to be a materials problem but a design problem.

These failures were a result of the design of the pump as it operated at maximum or runout flow rates. At the higher flow rates, there was a flow mismatch between the impeller blade and diffuser vane, since the impeller and diffuser were sized for the normal design flow point. This mismatch was the cause of cavitation on the leading edge of the diffuser vanes and occurred when the localized fluid velocities were highest. The narrow gap between the diffuser and impeller vanes increased the problem since there was little room for any localized flow adjustment.

Also, as the impeller blades pass a stationary diffuser vane, hydraulic forces are imparted to the vane. The larger the gap between the passing impeller blade and the diffuser vane, the smaller are the forces which are passed. When the radial gap between impeller and diffuser is too small, a strong shock is generated each time an impeller blade passes a diffuser vane inlet. These forces can be seen at the blade-passing frequency which is a function of pump revolutions per minute (rpm) and the number of impeller blades. This hydraulic loading of the diffuser was the cause of the failures which occurred in the two bolted diffuser connections, in conjunction with relatively low capscrew pre-loading and a joint design which could contribute to relative movement.

Extensive model testing at KSB and full-scale pump testing at CE Newington have verified these design problems at pump runout condition. Operation at single-pump runout, which is approximately 142% of design flow, produced the highest pulse intensities and, therefore, the highest stresses in the working parts.

Examination of the impeller vane fracture surfaces indicated over-stress failure by fatigue. Extensive investigations were made of the impeller castings which indicated that the three failed vanes were the thinnest of the 22 vanes examined. A finite element stress analysis was performed to better understand the impeller failures and establish a basis for ensuring that new impellers would have an adequate margin against failure. The peak stress distribution was shown to be near the leading edge of the impeller vane in the fillet area of the hub connection. This is where the cracks which led to the vane failure are located. In addition, strain gauge instrumentation in the full-scale pump test program was used to verify the stress levels in the impeller vane fracture area.

A number of design changes were made to the pumps, as discussed below, to correct the problems discovered during the hot functional test program.

The radial gap between diffuser and impeller increased from 2% to 6% (material was removed from diffuser vane to accomplish this), which demonstrated a significant reduction of the potential for cavitation damage on the diffuser inlet during operation at the low temperature runout flowrate condition. This change also reduced the pressure pulsations and hydraulic loading on the diffuser and, therefore, reduced the stresses in the diffuser's bolted connec-tions. In addition, the diffuser's inlet vanes were re-profiled.

The strength of the diffuser and suction pipe-to-diffuser joints was increased. The number of bolts, length of bolts, and bolt torques at these joints were all increased. In addition, other design changes were made to increase the stiffness of these joints.

The impellers were replaced with impellers that had thicker vanes near the leading edge where the failures had occurred. The trailing edge of the impeller vanes were backfilled to bring the pump head curve back up to design (trailing edge did not fail in hot function testing). These modifications provided a safety margin of 1.75 for the peak stress relative to the thickest vane which previously failed.

A test program was carried out at the CE Newington test facility to verify the modified design. This testing included 50 hours at design flow rate and 100 hours at runout flowrate on the original pump design to collect baseline data on the full-size hydraulic components at operating temperature and pressure. The modified pump was then tested for 51 hours at design flowrate and 150 hours at runout flowrate to verify the modified pump hydraulics. These tests included (1) strain gauge measurements on diffuser bolts, (2) accelerometer data to indicate vibration levels in the diffuser flange, (3) pressure pulsation data and visual inspection to check for cavitation marks, contact surface wear, or movements, and (4) bolt torque values.

In addition, model testing was conducted at KSB to verify that the increase in impeller-to-diffuser gap reduced the radial hydraulic forces. The model testing also provided fiber-optic investigation of the cavitation phenomenon to support the fact that these changes reduced the tendency for local cavitation in the diffuser. The KSB model tests and CE prototype tests were also used to verify the impeller stresses.

In addition, a demonstration test was conducted at PVNGS Unit 1 to confirm the adequacy of the repairs to the reactor coolant pumps under operating conditions. RCP 2B was torn down and inspected after completing 737 hours of operation (37 hours were at runout conditions). Visual inspection of the diffuser vanes and the diffuser and suction pipe bolted joints showed no evidence of cavitation or loose cap screws. The impeller was inspected and it passed the nondestructive examination (NDE) testing criteria previously established.

The visual inspection of the impeller revealed minor cavitation on the convex side of three vanes in a low stress area removed from where impeller vane failures had previously occurred. The average area of the cavitation was 16 mm in diameter. Experts from CE-KSB in Newington and from KSB in Frankenthal, West Germany, were consulted on the finding and they agreed that the slight cavitation was acceptable. This conclusion was based on the extensive experience derived from similar testing in West Germany where such cavitation was found to be self-limiting, and because the location of the cavitation was in the area of least stress and away from the area previously deemed critical.

Although the RCP is not a safety-related component, the staff has followed closely the applicant's evaluation of the RCP problems which developed during hot functional testing at PVNGS Unit 1 to determine the potential impact on plant safety. The staff followed the program for determining the root cause of the deficiencies, as well as the program for verifying the modifications by analysis, model testing, prototype testing, and full-scale field testing. The staff has also reviewed the applicant's final report on this matter, submitted by letter dated September 14, 1984, and a subsequent letter dated September 27, 1984, which summarized the results of the inspection following the demonstration test. It is the staff's opinion that the applicant's modifications to the RCP have resolved the deficiencies and that the RCP does not have any credible failure mechanism which would have safety implications.

(2) Low-Pressure Safety-Injection Pumps Failure to Start

The PVNGS 1-3 low-pressure safety-injection (LPSI) pumps are supplied by Combustion Engineering (CE). The pumps are manufactured by Ingersoll Rand (IR) and include 500-hp Westinghouse motors. Such a problem (an LPSI pump failure to start) was discovered during the preoperational testing on PVNGS Unit 1. Pump disassembly and inspection revealed surface damage to the mating surfaces of the impeller and pump lower case wear ring. The damage was repaired by smoothing these surfaces and the pump was then successfully retested.

During subsequent preoperational testing, additional failures to start were encountered with the LPSI pumps. The failures to start were intermittent, with one failure to start occurring after 41 successful starts and an accumulated run time of 66 hours.

The cause of the failure to start was hard contact between the impeller and casing ring. On the basis of a recommendation of CE and IR, the following corrective actions were implemented on the LPSI pumps to mitigate the effects of the contact. Because of similarities in design, the same changes were implemented on the containment spray (CS) pumps.

(1) The upper and lower case rings were replaced with material known for its gall-resistant properties (ARMCO Nitonic 60).

(2) The running clearances between the impeller and case rings were increased.

(3) The impeller upper and lower ring fit areas were serrated to make them less sensitive to any contact.

(4) Alignment constraints were increased to ensure centralization of the upper case ring.

However, following these changes to the pumps, additional failures to start occurred. As with previous failed starts, the shaft rotated slowly before trip and was free to rotate by hand thereafter. At that time it was concluded that shaft flexibility combined with transient electromagnetic starting forces of this particular 500-hp motor were responsible for the impeller contacting the wear ring with a resultant failure to start. Although contact between impellers and case rings during startup did not in itself cause failure to start, it was demonstrated to be a precondition of the failure-to-start mechanism.

Therefore, to minimize the startup shaft and impeller deflections, a stiffer shaft 800-hp motor from the CS pump was installed on the LPSI pump. Measurements of startup deflections have shown impeller-to-case ring contact consistently occurs with the original 500-hp LPSI pump motors and does not occur with the stiffer shaft 800-hp CS pump motors in combination with either LPSI or CS pump impellers.

It was then determined that a 100-start test with no failures would demonstrate adequate reliability with 95% confidence for a pump/motor set. An LPSI pump using an 800-hp CS pump motor successfully completed this test. In addition, PVNGS Unit 1 LPSI pumps A and B have been started 36 times and 46 times, respectively, since completion of the 100-start test, without any difficulties. Disassembly and inspection of these pumps during the time period of additional starts have not disclosed any abnormal wear patterns. CS pumps A and B have been started 48 times and 46 times, respectively, with the same results.

After reviewing the final report for the LPSI pump failure-to-start problem and the test results, submitted by letter dated August 9, 1984, the staff concurs with the applicant's conclusion that the safety-related LPSI and CS pumps are qualified to carry out their intended functions with the modifications described.

(3) <u>LPSI and CS Pumps Abnormal Rumbling Noises</u>

During the performance verification testing of the modified LPSI and CS pumps, a rumble-type noise was observed in the pumps and their adjacent suction piping. The rumble occurred between 2,800 and 3,400 gpm in the LPSI pumps and between 1,800 and 2,800 gpm in the CS pumps, which are below the normal flow ranges for these pumps. The rumble was intermittent, not periodic in character. Before LPSI and CS pump modifications, the pumps had not been operated in these flow ranges for a sufficient time to determine if the rumble was present even before pump modifications had been made.

The rumble noise came from collapsing of bubbles in the flow stream about one foot below the pump casing in the intake pipe. Aural observations of the intake piping at several locations disclosed that strong turbulence develops in the flow aperiodically. The bends, tees, and reducers in the system are sufficient to generate random, large-scale turbulence. The cavitation conditions

then develop intermittently when the swirl, associated with a burst of turbulence, interacts with the prerotation induced in the intake pipe when operating the pump at partial flow conditions.

Tests conducted on similar pumps have demonstrated that backflow from the impeller can induce prerotation in certain partial flow ranges. Accelerometer data confirmed the propagation downstream of flow disturbances at the acoustic wave speed which coincided with the noise source. In addition, changes in pipe internal configuration upstream of the intake (addition of strainer in the eccentric spoolpiece) shifted the frequency at which rumble occurred.

The upper time limit for which conditions (flowrates) at which rumble could occur in the LPSI pump is 4 hours. The CS pumps will not be operated at all in the flowrate range for which rumble occurs. LPSI pump 1B was run in its rumble range during tests for a duration of about 2 hours. Post-test inspections revealed no pump degradation. Also, IR has confirmed that operation in the rumble range for up to 4 hours would not cause pump damage.

The applicant has therefore concluded that both the LPSI and CS pump system do not represent a safety concern if left uncorrected and would not adversely affect the capability to safely shut down the reactor. However, LPSI pump operating procedures are being revised to incorporate a warning not to operate in the 2,500 to 3,500 gpm flow range during the shutdown cooling mode of operation.

After reviewing the final report and test results for the LPSI and CS pump rumble condition, submitted by letter dated September 26, 1984, the staff concurs with the applicant's conclusion that the safety-related LPSI and CS pumps are qualified to carry out their intended safety functions without requiring any modifications regarding operation in the rumble flowrate ranges.

(4) Thermowells

Hot functional testing (HFT) at PVNGS Unit 1 was initiated in early May 1983. The initial indication of resistance temperature detector (RTD) and related equipment problems developed at the site when the first of five RTDs failed in the electrically open position on May 31, 1983, during the HFT. The RTD senses reactor coolant temperatures at various locations in the primary loop. The thermowell forms a pocket for mounting the RTD by penetrating the reactor coolant system (RCS) piping and providing a thin-wall membrane which isolates primary system pressure. HFT was about three-quarters complete on June 17, 1983, when a leak was detected in the thermowell corresponding to the first RTD that failed electrically. On June 21, 1983, a leak developed in the thermowell associated with a second RTD that failed. APS and CE site personnel analyzed the pattern that had been established, i.e., the failure of an RTD and subsequent failure of the associated thermowell, and proceeded to plug those thermowells which contained failed RTDs.

When the loop 2A reactor coolant pump (RCP) was disassembled for its planned inspection following HFT, the cold-leg thermowells in loop 2A were inspected through the RCP casing with the pump diffuser in place. No thermowell failure was detected and further HFT was performed. Structural vibration data for the thermowells was obtained during this testing by placing an accelerometer in one

of the thermowells. Subsequent to these tests, inspection of the thermowells from the inside of the RCS piping during the week of July 18, 1983, showed damage to several cold-leg thermowells. Some cold-leg thermowells were broken flush with the inside of the RCS pipe; one was bent but intact; and one was broken both at the intersection between the large section at the top of thermowell and at the lower end adjacent to the inside wall of the pipe. Another thermowell was broken at the top and had fallen into the flow stream of the RCS cold leg. Other thermowells showed no visible damage. A total of five cold-leg thermowells were found to have failed. Initial inspection of the hot-leg thermowells did not show any visible damage, except about half of them were slightly bent in the direction of the reactor vessel (against the flow).

Both visual and metallurgical examinations were performed on the damaged thermowells. The visual examination included wear measurements which showed that the most significant wear was experienced in the RCS cold legs, which can have higher than normal flow. The high-flow conditions were experienced in various RCS cold legs during HFT when only one of the two reactor coolant pumps was operated, inducing flow in a particular steam generator. The majority of the thermowells that failed (3 out of 5) were located in the cold leg that had the highest number of hours in this high-flow mode of operation.

The wear measurement and damage correlation also showed that thermowells at a particular location in the RCP cold legs were the most susceptible to both wear and damage. On each cold leg, three thermowells are installed approximately 30 in. from the pump. They are oriented at 10, 12, and 2 o'clock when viewed from the pump in the direction of flow. The 10 o'clock position thermowells received the worst damage in 3 out of 4 loops. This position is almost in a direct line with the flow axis of the RCP diffuser vanes.

There is no physical evidence that a broken impeller part from the reactor coolant pump impacted any of the thermowells on loop 1B. On loop 2A, it appears Thermowell No. 125 was struck very early in the HFT period because little wear took place before it was bent at about 45° as a result of impact. Thermowell No. 122CA on the same loop (2A) was also struck but only after a considerable amount of wear occurred. This thermowell also fractured at the top.

A visual examination of the wear surfaces on the dowstream side of the thermowells classified the wear as adhesive wear. This wear is typical of that produced by oscillatory motion of loaded contact surfaces.

A metallurgical examination was performed on the five failed RTD thermowells. The results indicated that the chemical and mechanical properties and the microstructure were within the normal limits. There were no indications of pre-existing flaws on the fracture surfaces. The fracture surfaces exhibited relatively large areas of fatigue cracks. The cracks indicate high-cycle (low-stress) fatigue as the failure mechanism. Possible crack initiation points were identified on the outside of the thermowell tubular sections at approximately 90° to the flow direction. Portions of the fracture surface were smeared because of relative motion of the two surfaces. It was concluded that the most likely excitation mechanism to cause this type of failure would be vortex shedding. Vortex shedding results when flow across a tube produces a series of vortices in the downstream wake formed as the flow separates alternately from

the opposite sides of the tube. This alternating shedding of vortices produces alternating forces which occur more frequently as the flow increases.

Calculations have shown that for normal operating flow rates, the vortex shedding frequencies for the cold-leg thermowells would be adequately separated from the predicted natural frequency. For the higher flow conditions that existed during some portions of the hot functional testing, the vortex shedding frequency can be analytically shown to be close to the thermowell natural frequency, and thus could have stimulated the thermowell at its natural frequency.

To determine if the vortex shedding mechanism is responsible for thermowell damage, tests were run at the Combustion Engineering TF-2 flow loop test facility in Windsor, Connecticut. Testing of the System 80 thermowell/nozzle produced a wear pattern similar to that observed after HFT of PVNGS Unit 1. As a result of the damage and the postulated failure mechanism, CE initiated a program to redesign the thermowell in order to increase its strength and stiffness to raise its natural frequency.

The redesign of the thermowell is based on maintaining the original interfaces, design parameters, and thermal response times for the RTD instrument. In addition, it was desired to minimize flow-induced excitation. Four major design objectives were established:

(1) Increase the natural frequency of the thermowell to prevent resonance with vortex-shedding frequencies.

(2) Eliminate the clearance at the support area between the thermowell and nozzle to eliminate relative motion that could cause wear.

(3) Reduce stress level to eliminate the possibility of high-cycle fatigue.

(4) Provide a flow profile that would minimize vortex-induced loading.

A structural analysis was performed for pressure, thermal, seismic, and mechanical loadings for the redesigned thermowell. The thermowell was designed to the requirements of the ASME Boiler and Pressure Vessel Code Section III for Class 1 components.

The redesigned thermowell was tested in the CE-Windsor TF-2 flow loop to observe the effects of vortex shedding without the influence of the reactor coolant pumps. The redesigned thermowell was also installed in the CE-KSB pump test loop near the RCP outlet, similar to its actual arrangement in the reactor coolant system. PVNGS Unit 1 flow velocities and the test flow velocities were compared and it was concluded that the design calculation assumptions were adequately conservative.

In addition, shaker-table tests were conducted to compare the natural frequency of the original design with that of the redesign. The results of these tests indicated that the natural frequency of the new design is higher than that of the original design by a factor of 2.

The redesigned thermowell was then tested during the demonstration test at PVNGS Unit 1. The purpose for testing the thermowell was to verify that the thermowell response was consistent with that observed from other tests and by

analysis. The test duration was 700 hours. Test results verified that all design objectives were accomplished. Specifically, the response of the redesigned thermowell to vortex shedding was substantially reduced. Visual inspection of the thermowells after completion of the demonstration tests showed no damage or wear.

The staff has reviewed this matter, including the applicant's final report regarding resolution of the issue, submitted by letter dated September 14, 1984. After evaluating the analytical results and test data submitted by the applicant on this subject, the staff concurs that thermowell failures were caused by the resonance of vortex shedding frequencies and the thermowell natural frequency which resulted in wear and high-cycle fatigue. The staff concludes that analyses conducted by the applicant, supplemented by test data from the CE-Windsor TF-2 flow loop, the CE-KSB pump test loop and the full-scale demonstration tests satisfactorily demonstrated that the new thermowell design is structurally adequate.

(5) Thermal Liners

During the post-HFT inspection on July 19, 1983, the reactor coolant pump (RCP) 1A and 1B discharge piping was entered to look at the thermowells which failed during the HFT. It was noticed that the thermal liner in the safety-injection nozzle for the 1B pipe was protruding into the pipe about one-half inch. Also, it was observed that the thermal liner was missing from the safety-injection nozzle in the 1A pipe and there were gouges in the cladding on safety-injection nozzle 1A near the nozzle-to-pipe juncture where the positioning pads were located. The missing liner was found in the reactor vessel below the inlet nozzle through which it had passed and wedged between the reactor vessel and the outside of the flow skirt. All other nozzles with thermal liners in the RCS piping were examined, and the liners were found to be in place.

The applicant recovered thermal liner 1A from the reactor vessel. Inspections and examinations showed that the nozzle groove was correctly machined, and the liner was explanded (expanded by explosion forming) into place properly, but the liner had vibrated and had worn the nozzle cladding so it became loose and eventually dislodged from the nozzle. The safety-injection nozzle is located downstream of the pump and upstream of the reactor vessel. The applicant evaluated the potential for blocking core flow and concluded that the dislodged liner would not lead to flow blockage. The liner would be prevented from entering the core region by the reactor flow skirt and would remain trapped between the flow baffle and the reactor vessel shell as found in PVNGS Unit 1. However, the liners were originally installed only as additional assurance of adequate protection of the nozzle. Because of this and to avoid loosening and possible failure of the three remaining liners, the applicant decided to remove all thermal liners from the safety-injection nozzle areas. Any damage done to the nozzle cladding was repaired and operational suitability was verified by non-destructive examination. The explansion ridge in the cladding was also removed and the surface was machined smooth and examined. No base metal was exposed.

To demonstrate that the above modification is acceptable, the applicant reviewed and reexamined the usage factors for the safety-injection nozzles based on all design transient cycles. The maximum cumulative usage factor in the part of the nozzle that is protected by the liner when it is in place is calculated to be 0.094. The usage factor at this location without the liner is 0.34. The

cumulative usage factor is calculated to be 0.60 in its "as is" configuration in which a stress concentration factor is used. If this surface is machined smooth so that a stress concentration factor would not be present, which is the case for the modification described above, the usage factor at this location would be 0.16. Thus, the largest usage factor in the area that was behind the liner will be 0.34 when the liner is not present. The usage factor in the safe-end portion of the nozzle, which is not protected by the thermal liner, is 0.6. Therefore, the absence of the liner will not change the operating capability of the nozzle.

The applicant has removed all thermal liners from the safety-injection nozzle areas together with the explansion ridges and repaired all the damages. The staff has reviewed this matter, including the applicant's report regarding resolution of the issue submitted by letter dated December 30, 1983. Since the cumulative usage factor in the area that was behind the liner is a maximum of 0.34 compared with the usage factor of 0.6 at the safe-end portion of the nozzle, the staff concludes that the modification eliminated the potential problem and will not affect the operability of the nozzles. The staff agrees to this modification and finds it acceptable.

(6) Control Element Assembly Shroud (CEA Shroud)

Inspection of the PVNGS Unit 1 reactor internals subsequent to HFT in July 1983 revealed damage to the control element assembly shroud (CEA shroud). The CEA shroud is part of the upper guide structure (UGS) assembly. It consists of an array of vertical round tubes (9-in. OD) which are arranged in a square grid pattern with 16-in. pitch. The tubes are joined by welding vertical plates called webs between adjacent tubes, as shown on Figure 14.1. Tubes and webs are made from 3/16-in. type 304 stainless steel. The purpose of the CEA shroud is to provide separation of the CEAs. The CEA shroud is mounted on eight pads on the UGS base plate and is held in position by eight tie rods which are threaded into the UGS base plate at their lower end. At their upper end, the pretensioned tie rods are held by nuts which bear on eight plugs in the tops of eight of the CEA shroud tubes. Guides for the 4-finger CEA extension shafts are attached to the top of the tubes, and guides for the 12-finger CEA extension shafts are attached to the webs. These guides serve the purpose of aligning CEA extension shafts for entry into the closure head nozzles during closure head installation and into the internals lift rig during attachment.

The damage, revealed by visual and dye penetrant examination consisted of the following:

(1) A total of 13 cracks in eleven 4-finger CEA shroud tubes. In most instances, these cracks start in the welds at the attachment of the 4-finger CEA guides to the shroud tubes.

(2) Two cracks involving the welds at the attachment of the 12-finger CEA extension shaft guides to the webs.

(3) Three cracks involving the welds between 4-finger CEA shroud tubes and webs: two at the top of the shroud and one at the bottom.

(4) One crack in the base metal of a web.

(5) Three wear marks on the shroud at the 45° location.

(6) One ductile break, one-half-inch long, located in a web at the bottom.

A metallurgical program was established to identify the nature of the failures. Samples of the shroud were removed and examined. Metallography and chemistry confirmed that the shroud material was as specified. Fractography of the fractured surfaces showed most of the failures occurred by high-cycle fatigue; i.e., by induced cyclic stresses of a magnitude at or near the endurance limit of the material. Cracking in some of the welds was identified as transgranular stress corrosion cracking (TGSCC) which was caused by entrapped slag from the shielded metal arc welding (SMAW) process which was used in fabricating the CEA shroud assembly. The fatigue cracking and TGSCC were determined to be unrelated events except for one location. At the bottom of the shroud at a tube-to-web joint on tube 13, a fatigue crack was identified, but it occurred as a result of TGSCC propagation.

A series of hydraulic and mechanical vibration tests was performed to identify potential forcing functions which might induce shroud vibrations and to characterize the modes of vibration of the CEA shroud assembly and of individual CEA shroud tubes.

Analyses were conducted to investigate potential causes of the failures in the CEA shroud by examining the structural response to the loadings experienced during the comprehensive vibration assessment program (CVAP) which was completed in July 1983. The primary objective of the analyses was to identify potential forcing functions and consequent modes of vibration during normal operation which could have caused the same kind of failures.

The evaluation of the failure modes utilizing CVAP test data, structural analyses, and experimental test measurements on both single-shroud tubes and on the entire CEA shroud assembly initially identified four potential failure mechanisms for the original shroud design; of the four, only two are considered probable. One mechanism is the lateral response of the CEA shroud assembly to vibratory excitation of the upper guide structure support plate, and a second mechanism is the higher frequency shell response of the individual shroud tubes. Of these two, only the first was determined to be significant by analysis and was shown to be a probable cause of the failures.

Specifically, the applicant concluded that the fatigue failures of the original structure were primarily caused by low-frequency response of the assembly to excitations induced by adjacent structures (CEA tube bank) with secondary contributing stresses from shell mode responses due to pump pressure pulsations.

On the basis of the above evaluations, the applicant decided to modify the Palo Verde CEA shrouds by removing 3 in. from the top of the CEA shrouds and also removing all of the 4-finger and 12-finger CEA guides. This eliminates the potential resonance failure caused by vibration of the CEA guides. It also eliminates the high stress concentration at the top of the tubes and thereby reduces the local stresses induced by global shroud vibration. In addition, it effectively eliminates all of the original locations of crack initiation. The guides as originally designed had no function during normal operation. They served the purpose of aligning CEA extension shafts for entry into the closure head nozzles during closure head installation and into the internals lift rig during attachment. With the modified design, this function is provided by a

separate tool which is not a permanent part of the vessel or the internals. This tool is utilized only during refueling operations.

To eliminate the possibility of transgranular stress corrosion cracking, all fillet, double fillet, or partial penetration welds which had been made previously with shielded metal arc process were mechanically removed and replaced by the gas tungsten arc process.

The second modification was the addition of snubbers (keyways) which limit the lateral displacement of the CEA shroud in the global modes of vibration. Snubbers are located on the shroud at the upper guide structure flange elevation and transmit the loading to the UGS flange. This also raises the natural frequencies of the dominant global vibration modes of the shroud relative to the UGS assembly.

To characterize the vibration behavior of a single CEA shroud tube after it had been modified as described above, a mechanical excitation test was performed in air.

Results indicated that the maximum strain amplitude existed at the least critical tube region for the resonance frequency. This location is far away from the web weldments where stress risers would exist. Analytical models were confirmed by using the detailed model deflections and strain patterns obtained from these experiments.

For a final assessment of their design adequacy, the modified CEA shrouds were included as a part of the demonstration test which was conducted by the applicant at PVNGS Unit 1 in July 1984. The test conditions were representative of those used during the hot functional test and the system was appropriately instrumented to check out the structural and hydraulic performance. Following completion of the test, the reactor vessel head was removed and a reactor coolant pump was disassembled to be visually inspected.

Evaluation of the comparisons of analytical predictions and demonstration test measurements led the applicant to the conclusion that the design adequacy of the modified CEA shroud is acceptable for long-term operation.

This conclusion is based upon the following results:

(1) All design limits of Section III of the ASME Code have been met by means of analysis for normal operation and for seismic and LOCA loads.

(2) The measured response frequencies of the CEA shroud assembly were as predicted. Response strains from assembly motion were lower than expected. The shell mode response was shown to be small and well under the acceptance criteria.

(3) The acceptance criterion based upon ASME Code fatigue limits, was at no time exceeded during the demonstration test.

(4) Inspection of the shroud assembly was performed after acquiring a minimum of 10^7 cycles of vibration. No indications of failure or abnormal wear were found.

(5) Measured responses in the UGS tube bank region agreed very well with CVAP data. It can be concluded that the structural modifications do not affect the UGS responses and flow conditions.

(6) The mechanical excitation tests, although not representative of the loading in the reactor, produced failure in the original tube with the 4-finger guides but not in the modified tube. This indicates that the stress levels in the modified tube are reduced significantly for the same levels of excitation.

On the basis of a review of the applicant's evaluation of the damaged CEA shrouds, including the final report submitted by letter dated September 14, 1984, the staff agrees with the applicant's assessment that two separate mechanisms, high-cycle fatigue and transgranular stress corrosion cracking, contributed to the observed cracking. The staff further concurs that the fatigue failures were primarily caused by low-frequency response of the CEA to excitations induced by adjacent structures.

The structures were modified to eliminate the potential resonance failure caused by vibration of the CEA 4-finger and 12-finger guides and to eliminate the locations of the original failures. In addition, to eliminate the possibility of future transgranular stress corrosion cracking, the shielded metal arc weld process was not used in the modified design for fillet, double fillet, or partial penetration. The staff also reviewed fabrication documentation for the modified PVNGS Unit 1 shroud to ensure that such welding was not used.

On the basis of a review of the applicant's analyses, in conjunction with the hydraulic tests, mechanical vibration tests, and full-scale demonstration test at PVNGS Unit 1, the staff concludes that the original causes of the cracks have been effectively removed and that the modified CEA shroud design is acceptable for long-term operation.

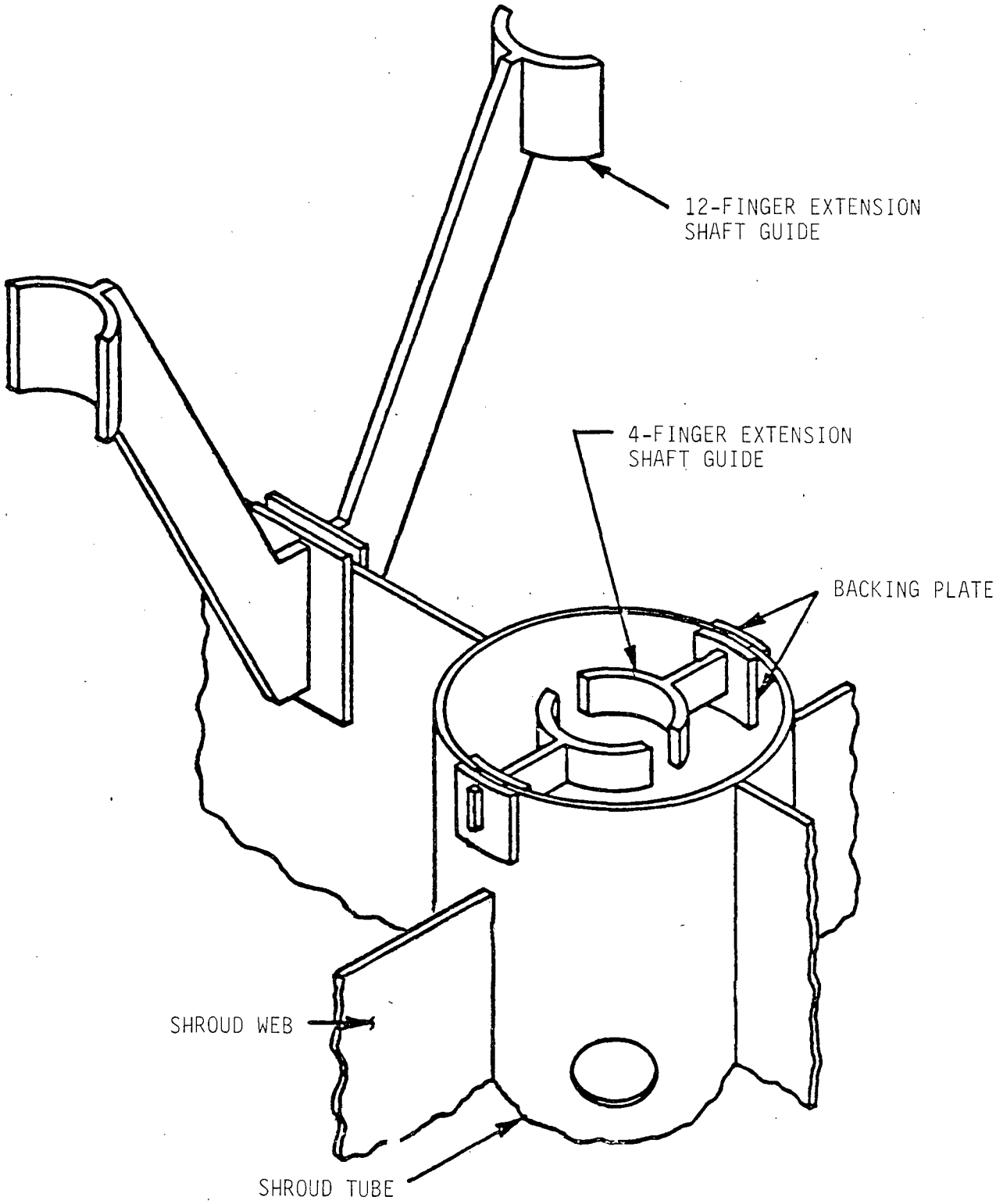

Figure 14.1 Control element assembly extension shaft guides

15 ACCIDENT ANALYSIS

Through the initial test program performed on the various engineered safety feature (ESF) systems at PVNGS Unit 1, the applicant has determined that many of these systems do not perform as assumed in the original licensing safety analyses. The systems that did not perform in accordance with the FSAR analysis assumptions are: (1) HPSI (high-pressure safety injection) system (lower flow than assumed), (2) LPSI (low-pressure safety injection) system (lower flow than assumed), and (3) AFW (auxiliary feedwater) system (lower flow and later actuation time than assumed). Although the reduction in each system's or component's performance, taken individually, appears not be be significant, the staff has required the applicant to assess the impact of this performance degradation on each and every FSAR Chapter 15 safety analysis.

The applicant's November 5, 1984, letter contained the first impact assessment. A table of impacts was prepared for all FSAR Chapter 15 events and for each of the five performance reductions associated with the AFW system. The SGTR, MFLB, and MSLB (steam generator tube rupture, main feedwater-line break, and main steamline break) accidents were reanalyzed and found to meet the staff's acceptance criteria. However, the other FSAR Chapter 15 events were not reanalyzed because the applicant judged that the AFW system performance reductions would not impact these events. This judgment was based largely on inspection of the original analyses and noting where the minimum departure from nucleate boiling ratio (DNBR), peak reactor coolant system (RCS) pressure, or time of peak cladding temperature occurred with respect to the AFW system initiation time. The staff's evaluation of these three reanalyzed events is contained in Sections 15.3.1, 15.3.2, and 15.4.5 of this supplement.

Later in the review process, the staff became aware of further reductions in ESF systems performance. The LPSI and HPSI pump performances were found to be slightly less than assumed in the accident and transient analyses. Again, the applicant reanalyzed what was judged to be the events most affected by this degradation and found that the acceptance criteria were met. The applicant's two December 5, 1984, letters forwarded the results of reanalyses of the limiting small- and large-break loss-of-coolant accidents and showed that the acceptance criteria were met. The staff's review of these letters is discussed further in Appendix H to this supplement. The staff's review of these reanalyses resulted in a concern that other FSAR Chapter 15 events may be affected by the reduced HPSI and LPSI pump performances, and the need for the applicant to reassess these events. Also, while the staff's review of the applicant's November 5, 1984, table (showing the impacts of the AFW system performance reduction on all FSAR Chapter 15 events) was nearing completion, the introduction of further ESF system problems led the staff to question whether the combined effects of the various performance problems had been properly assessed. At meetings with the applicant and Combustion Engineering on December 18, 19, and 20, 1984, these concerns were expressed and discussed. Another table of impacts was prepared. This table, which is contained in the applicant's December 20th letter shows the individual and combined effects of each reduction of ESF system performance on the FSAR Chapter 15 events. The applicant's December 20, 1984, table presented a reanalysis of the SGTR and limiting MSLB considering

the combined effects of all ESF system performance reductions. The applicant had previously reanalyzed, in its December 5, 1984, letter, the limiting large- and small-break LOCAs with all ESF system performance reductions, and these results were included in the December 20, 1984, table.

As in the November 5, 1984, submittal, the applicant's December 20, 1984, submittal did not provide reanalyses of all FSAR Chapter 15 events with the combined effects of all ESF systems performance reductions. The applicant made the same type of assessment as the earlier assessment, that was based on engineering judgments.

When considering the overall impact of the various ESF systems performance reductions on the safety analyses, and the analyses performed to date, the staff finds that the situation for each event falls into one of the following categories:

(1) Events that rely on the ESF systems whose performance is reduced, but the combined effects results in an increase in margin to the staff acceptance criteria.

(2) Events that in no way rely on the affected ESF systems.

(3) Events that assume operation of the affected ESF systems, but the equipment actuation time, valve closure time, or pump starting time is predicted to occur after the time of minimum DNBR, peak pressure, etc.

(4) Events that assume operation of the affected ESF systems, and the margin to the staff acceptance criteria would be reduced.

    (a) Events that have been reanalyzed, with a licensing code, considering all ESF systems degradations.

    (b) Events not completely analyzed, or judged to be non-limiting, or analyses not performed with a licensing code, or other events.

On the basis of the analyses that have been submitted to date, and on the staff's review of the impact tables presented in the applicant's November 5 and December 20, 1984, submittals, the staff has reasonable assurance that the applicant complies with the Commission's regulations. However, the staff requires further information regarding the impact of the ESF systems on every FSAR Chapter 15 event to confirm this conclusion. Although the staff in principle agrees with the applicant's judgments regarding the information already provided, the staff is concerned that suitable, correct, baseline calculations may not now exist for all events, upon which future plant changes will have to rely. The staff therefore will need the applicant to amplify the information already submitted to include the following:

(1) For every FSAR Chapter 15 event, identification of the appropriate category it falls under, as described above. Included should be justification for the selected categorization.

(2) For events falling into category 4b, above, a reanalysis showing that the staff's acceptance criteria continue to be met. Alternately, a suitable study can be referenced showing that the event's consequences are acceptable and applicable to the PVNGS 1-3.

(3) For events falling into category 3, above, a clear description of the relative times, and an assessment of the impact of any delays in the equipment relied upon.

Prior to initial criticality, the staff will meet with the applicant for the purpose of reaching preliminary agreement on the appropriate event categorization and reanalysis requirements. The staff may require reanalysis of events in category 3 depending on the information provided and on further review.

The staff requires the applicant to provide a schedule for submitting this information prior to initial criticality. The following license condition should be added to support this requirement:

> Prior to initial criticality, the applicant will submit, for staff review and approval, a schedule showing those FSAR Chapter 15 safety analyses that will be reanalyzed to account for the reduced system performance and which conform to the categorization described in Section 15 of Supplement No. 7 to the SER.

15.3 Limiting Accidents

15.3.1 Steamline Breaks

As a result of the preoperational testing at PVNGS Unit 1, the applicant has taken exception to the following CESSAR FSAR interface requirements with respect to the main and auxiliary feedwater systems:

(1) An increase in the feedwater isolation valve closure time (in both the downcomer and economizer lines) from 4.6 to 9.6 seconds.

(2) A reduction in the auxiliary feedwater flowrate from 875 to 750 gpm per pump.

(3) An increase in the auxiliary feedwater pump start times when normal alternating current is available from 10 seconds to 22 and 29 seconds for the motor and turbine driven pumps, respectively.

(4) An increase in the time delay from 15 to 23 seconds in which interrupted auxiliary feedwater flow must be fully reestablished in the steam generators.

In a letter dated November 5, 1984, the applicant provided the results of a reanalysis of the most-limiting steamline break accident to demonstrate the acceptable impact from those design changes identified above.

The case analyzed in CESSAR FSAR Section 15.1.5, large steamline break during full-power operation with concurrent loss of offsite power (SLBFPLOP), has been identified as the most limiting case with respect to the PVNGS design changes.

In the applicant's reanalysis of SLBFPLOP, the pressure difference between the steam generators has a setpoint of 325 psid for lockout of auxiliary feedwater to the ruptured steam generator. The sequence of events listed in revised Table 15.1-1 of the FSAR indicated that the AFW isolated from the ruptured steam generator at 16 seconds after the difference between steam generator

pressures reaches 325 psid. This portion of the reanalysis supports the response time of this action listed in Table 3.3-5 of PVNGS Unit 1 Technical Specifications.

The results of the applicant's reanalysis of the SLBFPLOP using actual PVNGS specific data indicated that the minimum DNBR did not decrease below 1.19 and the transient did not result in a return to criticality. The maximum total reactivity is -0.03% $\Delta\rho$. This is mainly so because in the PVNGS plant arrangement, the length of piping between the refueling water storage tank (RWST) and the RCS is shorter than that assumed in CESSAR FSAR analysis. Thus, in the PVNGS FSAR analysis the safety-injection flow containing boron concentration from the RWST reaches the RCS earlier than what was calculated in CESSAR FSAR. This effect overrides the effect of the delayed feedwater isolation, auxiliary feedwater initiation, and reduced AFW flow.

The staff has reviewed the applicant's November 5th reanalysis and agrees that cases 2 through 6, analyzed in CESSAR FSAR Section 15.1.5 are bounded by the case 1 analysis considering the reduced AFW flow, and changes in valve closure time.

In response to the staff concerns regarding the effects of reduced HPSI and LPSI flow on the MSLB analysis and the combined effects of various equipment problems, the applicant provided the results of a preliminary reanalysis considering all the systems change identified above in a letter dated December 20, 1984.

The applicant stated that, for the limiting steamline-break case reanalyzed for PVNGS (submitted by its letter dated November 5, 1984), reducing the HPSI flow results in an increase in the maximum post-trip reactivity to +0.035%$\Delta\rho$ and in a reduction in the minimum post-trip DNBR to 2.4. However, this maximum post-trip reactivity is bounded by the value for this event in the CESSAR FSAR (+0.09$\Delta\rho$). A minimum DNBR of 2.4 is well above the specified acceptable fuel design limit value for which any fuel failure would be indicated. Therefore, although the event results are altered by the combined effects of the reduced HPSI and AFW flows and valve closure times, the event consequences still meet the acceptance criteria. The LPSI pumps will not be actuated during a postulated steamline break; therefore, the reduction in LPSI flow should not affect the overall consequences.

The consequences of the MSLB case analyzed to maximize the potential for degradation in fuel performance prior to reactor trip (case 5 of the CESSAR FSAR) are unaffected since a safety-injection actuation signal does not occur prior to reactor trip.

However, the applicant did not reanalyze the other, previously less limiting cases on the basis of its judgment that the previously analyzed worst case would remain limiting. Although the staff has reviewed the applicant's assertion and agrees that the limiting case should not change, the staff requires further substantiation of this assertion as described in Section 15 above.

The staff has reviewed the above-stated applicant submittals and concludes that reasonable assurance exists that the results of the limiting MSLB analysis with the actual PVNGS plant-specific data (e.g., main and auxiliary feedwater system and safety injection system design) meet the acceptance criteria for this event and therefore it is acceptable.

15.3.2 Feedwater System Pipe Breaks

In a letter dated November 5, 1984, the applicant provided the results of a reanalysis of the feedwater-line-break accident to demonstrate the acceptable impact from the PVNGS design changes on the main and auxiliary feedwater system identified in Section 15.3.1 of this supplement.

The applicant stated that the feedwater-line-break transient is the most limiting transient with respect to long-term RCS heat-removal capability because of its conservative assumptions in the analysis which include:

(1) An instantaneous total loss of all main feedwater to both steam generators at the event initiation and throughout the transient.

(2) A reactor trip on a steam generator low level trip signal which minimizes the steam generator inventory available for heat removal.

(3) The single failure of one of the two safety-related auxiliary feedwater pumps.

(4) All auxiliary feedwater which is diverted to the ruptured steam generator and not credited for heat removal.

(5) The maximum value within the allowable range for the auxiliary feedwater temperature.

In order to demonstrate the adequacy of long-term RCS heat removal with the PVNGS auxiliary feedwater system design, the full spectrum of feedwater-line breaks was reevaluated. It was determined that for breaks larger than the limiting break size presented in Appendix 15B of the CESSAR FSAR (0.2 ft^2), the main steam isolation signal on low steam generator pressure would occur very early in the transient, and thus the 325-psi difference between the steam generators would be reached quickly. The ruptured steam generator is then isolated, and full auxiliary feedwater flow is provided to the intact steam generator. Also, the larger break sizes would cause an earlier reactor trip on low steam generator level and would result in the intact steam generator having more water inventory at the time of the trip for long-term RCS heat removal. For the smaller breaks, the RCS will not overpressurize in the long term. Therefore, a 0.2-ft^2 break was selected as the most limiting break size to be reanalyzed for the purpose of demonstrating the long-term heat removal capability with the actual PVNGS AFW system.

The results of the applicant's reanalysis of the feedwater-line break which were documented in the November 5, 1984, letter, indicate that the maximum RCS pressure reported in Appendix 15B of the CESSAR FSAR will not be impacted as a result of the changes in the PVNGS plant auxiliary feedwater system and the main feedwater isolation closure time, because the maximum RCS pressure during a feedwater line break occurs prior to the delivery of auxiliary feedwater flow and main steam isolation signal for main feedwater isolation. Further, the main feedwater isolation time does not affect this transient in any way, since an instantaneous total loss of all main feedwater to both steam generators was assumed in this analysis. The results of the reanalysis also indicated that the water level in the intact steam generator starts to recover at 330 seconds into the transient and by 900 seconds the plant is in a stable condition with

the pressurizer liquid volume less than 1200 ft^3 and the intact steam generator liquid inventory at approximately 51,000 lb(mass). This result demonstrates that the changes in the PVNGS plant identified in Section 15.3.1 of this supplement do not adversely impact the limiting feedwater-line-break accident analysis. Feedwater-line breaks are analyzed as pressurization events. Since the minimum DNBR does not decrease below the initial conditions, it is concluded that the fuel integrity will be maintained throughout the event.

In response to the staff concerns, relating to the effects on the results of the safety analyses due to the reduced flow from the HPSI and LPSI pumps, the applicant confirmed, in a letter dated December 20, 1984, that the safety injection systems will not be actuated during a postulated MFLB accident; thus, there would not be any impact on the analysis.

On the basis of the above, the staff has concluded that the results of the applicant's reanalysis are acceptable. However, the applicant has not reanalyzed all credible feedwater-line-break scenarios with actual AFW, HPSI, and LPSI pump capacities and longer MFWIV closure times for PVNGS. The applicant has asserted, on the basis of engineering judgments, that the cases not reanalyzed would not be affected and, therefore, need not be reanalyzed. The staff has reasonable assurance that the case previously demonstrated to be limiting would remain the limiting case with the reduced system performance. However, the staff requires the information described in Section 15 of this supplement to confirm this conclusion.

15.4 Radiological Consequences of Accidents

15.4.1 Main Steamline Break Radiological Consequences

In Section 15.4.1 of the PVNGS 1-3 SER, The staff stated that the primary-to-secondary leakage from the steam generators should be less than or equal to 0-3 gpm. This value was based on the bounding accident analysis in Chapter 15 of the CESSAR FSAR. However, the site-specific meteorological parameters for PVNGS 1-3 are sufficiently less than the parameters assumed in the CESSAR FSAR to allow the limiting condition for operation for each unit of PVNGS 1-3 to be a total 1 gpm primary-to-secondary leakage through both steam generators and 720 gpd through any one steam generator. These values will be incorporated into the Technical Specifications.

15.4.5 Steam Generator Tube Rupture Accident

In Section 15.4.5 of the Supplement No. 6 to the SER, the staff stated the following:

> In conclusion, the acceptability of the offsite radiological consequences of an SGTR accident is heavily dependent upon the instructions to the operators to recognize the conditions when the cooldown rate exceeds the assumed values for this analysis. To resolve this issue, the staff finds that, from an overall plant safety standpoint, the applicant should install block valves at PVNGS 1-3, upstream of the ADVs, per the interface requirement stated in the CESSAR System 80 FSAR. Alternately, the applicant should either

assume an ADV stuck in the full-open position, or provide positive assurance that the ADV cannot be opened beyond the assumed 10.5%.

In response to the above staff requests, by letters dated September 19, October 5, October 24, and December 4, 1984, the applicant provided a reanalysis of the SGTR accident with a failed atmospheric steam dump valve (ADV) in the full-open position. This reanalysis has incorporated the PVNGS plant-specific design of the main and auxiliary feedwater system. The PVNGS Emergency Operating Procedures have been modified to include direction to the operators to feed the affected steam generator in order to keep the tubes covered and to maximize the retention of iodine in the steam generator liquid. This modified procedure provides substantial benefits in limiting the radiological consequences following a postulated SGTR accident. The applicant has incorporated this operating procedure in its reanalysis of the SGTR event.

The applicant's reanalysis assumed that automatic isolation of AFW to the damaged steam generator occurs 3 minutes after the ADVs are manually opened, and that the first operator action taken to recover the water level in the affected steam generator is at 2 minutes after automatic isolation. The applicant's sensitivity calculations indicate that to limit the offsite doses to within the 10 CFR 100 guideline values, the operator will need to take manual control of the auxiliary feedwater system no later than approximately 12 minutes after opening of the ADV on each steam generator. The time interval between the automatic isolation of AFW to the affected steam generator and taking manual control of the AFW system is again 2 minutes. The staff has reviewed the operator actions described above and concludes there is reasonable assurance that the operator can initiate auxiliary feedwater flow to the affected steam generator and can maintain the water level above the steam generator tubes. However, this plant-specific procedure deviated from the CE Emergency Response Guidelines (CEN-152) which requires that the operator isolate the affected steam generator after the RCS temperature is below a specified value.

In response to the staff concern with respect to potential steam generator overfill following a postulated SGTR event, the applicant stated, in a letter dated December 4, 1984, that after taking manual control of the auxiliary feedwater system, the operator first raises the affected steam generator level above the top of the U-tubes. Then the AFW flow is throttled to maintain the level above the top of the steam generator U-tubes at about 71.5% wide range using Class 1E steam generator level indicators in control room. There are audio and visual alarms that actuate when it appears that steam generators are being overfilled. These alarms would provide steam generator overfill indication to the operator.

On the basis of the above, the staff has concluded that the applicant should modify the PVNGS Procedure Generation Package to include this deviation from CEN-152.

The results of the applicant's reanalysis of the SGTR accident with a loss of offsite power and a fully stuck open ADV indicated that the RCS and secondary system pressures are below the 110% of the design pressure and the minimum DNBR remains above 1.19 throughout the transient. The applicant estimated the potential radiological consequences at the exclusion area boundary to be 40 rem (thyroid) in 2 hours and at the low population zone outer boundary to be 20 rem

(thyroid) in 8 hours. The staff has also performed an independent evaluation of the offsite radiological consequences of the postulated event at the exclusion area boundary. Using assumptions consistent with SRP Section 15.6.3, the staff estimated the potential radiological consequences at the exclusion area boundary to be 77 rem (thyroid) and 0.4 rem (whole body) which are less than the guideline values of 10 CFR 100. On the basis of the above, the staff concludes that the results of the applicant's reanalysis of the SGTR accident are acceptable.

In response to the staff concern with respect to the overall impact on the results of the SGTR analysis due to reduced safety injection pump flow, the applicant, in a letter dated December 20, 1984, stated that the LPSI pumps are not actuated during the SGTR events. For the SGTR analysis with loss of offsite power and a stuck-open ADV (single failure), changes in HPSI flow will have minimal impact. A decrease in HPSI flow will result in a slight decrease in offsite dose which was confirmed by a reanalysis. For this event, operator actions are assumed to bring the plant to cold shutdown and to throttle the HPSI pumps as necessary per CEN-152.

The staff has addressed the requirements of confirmatory reanalysis of all events presented in Chapter 15 of the FSAR that are associated with the revised AFW and SI flows. The SGTR accident should be included in the list of events to be evaluated.

17 QUALITY ASSURANCE

17.2 Organization

In Section 17.2 of Supplement No. 5 to the PVNGS 1-3 SER, the staff had completed its evaluation of the organizational structure of the operations phase quality assurance program for PVNGS 1-3. In Amendment No. 13 to the FSAR, the applicant provided a realignment of the organization. The Corporate Quality Assurance Manager's organizational title has been changed to the Corporate Quality Assurance Director. He still reports directly to the Arizona Nuclear Power Project Executive Vice President as do the Director, Project Services, and the Vice President, Nuclear Production. This organizational realignment is acceptable to the staff and, to reflect this change, the following discussion replaces Section 17.2 of SER Supplement No. 5 in its entirety.

The structure of the organization responsible for the operation of PVNGS 1-3 and the establishment and execution of the operations phase quality assurance program is shown in Figure 17.1 of this supplement. The Arizona Nuclear Power Project Executive Vice President is responsible to the Chairman of the Board and Chief Executive Officer of the Arizona Public Service Company for promulgating the quality assurance program requirements. He has ultimate responsibility for quality assurance of PVNGS 1-3. The Vice President, Nuclear Production; the Director, Project Services; and the Corporate Quality Assurance Director each report to the Arizona Nuclear Power Project Executive Vice President.

The Vice President, Nuclear Production, is responsible for engineering and design support, construction of major modifications, and records management. Verification that such activities comply with requirements of the Operations Quality Assurance Program is the responsibility of the Corporate Quality Assurance Director.

The Director of Nuclear Operations is responsible for operation of PVNGS 1-3. He has the responsibility for establishing controls necessary to ensure that station activities are performed in accordance with the Operations Quality Assurance Program. The Director of Nuclear Operation's day-to-day responsibilities for the operation of PVNGS 1-3 have been delegated to the PVNGS Nuclear Engineering Manager (not shown on the figure). The PVNGS Director of Nuclear Operations reports directly to the Vice President, Nuclear Production, and has the responsibility for directing station operation and maintenance activities during the operations phase.

The Corporate Quality Assurance Director is responsible for development of the Operations Quality Assurance Program and for verifying effective implementation of the Operations Quality Assurance Program. He reports directly to the Arizona Nuclear Power Project Executive Vice President. The Corporate Quality Assurance Director directs the activities of the Corporate Quality Assurance Department and provides functional direction and technical guidance to the

Quality Assurance Managers. The Corporate Quality Assurance Director has overall responsibility for the quality assurance program including audits and quality verification. He and his staff (1) develop the operations quality assurance criteria, (2) prepare and control the Operations Quality Assurance Criteria Manual, which is concurred with by the Vice President, Nuclear Production, and approved by the Arizona Nuclear Power Project, Executive Vice President, (3) verify the implementation of the quality assurance program, (4) verify the adequacy of quality training programs, (5) review procurement documents, procedures, and instructions to ensure inclusion of appropriate quality assurance requirements, and (6) conduct internal audits within APS and external audits of suppliers.

The Corporate Quality Assurance Director and his staff have the authority, delineated in writing, to (1) identify quality assurance problems, (2) initiate, recommend, or provide solutions through designated channels, and (3) verify implementation of solutions.

Disputes which may arise between quality assurance personnel and personnel in other organizations of the applicant which cannot be resolved shall be referred to the next appropriate higher level of management for resolution. Disputes which cannot be resolved through these levels may ultimately be resolved by the Vice President, Nuclear Production, or the Arizona Nuclear Power Project Executive Vice President.

The Quality Systems and Engineering Department is directed by the Quality Systems and Engineering Manager who reports to the Corporate Quality Assurance Director. The Quality Systems and Engineering Department is responsible to: (1) develop, maintain, review, issue, and/or control programs and procedures required for the implementation of the APS Quality Assurance Program; (2) develop inspection plans and procedures; (3) review quality documents to verify adequate quality requirements are imposed to meet regulatory requirements; (4) identify conditions that will have adverse impact on the quality assurance program; and (5) detect trends or conditions adverse to quality which may not be apparent to the day-to-day observer.

The Procurement Quality Department is directed by the Procurement Quality Manager who reports to the Corporate Quality Assurance Director. The Procurement Quality Department is responsible to: (1) review procurement documents for quality requirements; (2) review vendor quality programs and ensure proper implementation in accordance with procurement documents; (3) perform receiving inspection and ensure the adequacy of storage of materials, parts, and components; (4) review procurement documentation initiated by other organizations which are delegated procurement responsibilities as necessary to ensure quality; and (5) identify adverse deficiencies in quality-related procurements that will impact the effectiveness of the quality assurance program.

The Quality Audits and Monitoring Department is directed by the Quality Audits and Monitoring Manager who reports to the Corporate Quality Assurance Director. The Quality Audits and Monitoring Department is responsible to: (1) plan and prepare an audit schedule to meet current regulatory commitments; (2) plan and conduct periodic audits of all aspects of the quality assurance program; and (3) conduct unscheduled audits as deemed necessary to appraise quality-affecting activities.

The Quality Control Department is directed by the Quality Control Manager who reports to the Corporate Quality Assurance Director. The Quality Control Department is responsible to: (1) perform inspections to verify conformance of installations with documented instructions, procedures and drawings and (2) determine that important activities have been satisfactorily accomplished.

17.3 Quality Assurance Program

As stated in Section 17.2 of this supplement, the applicant has realigned its organizational structure for the quality assurance program. To reflect this change, the first, fifth, and sixth paragraphs of Section 17.3 of the SER are replaced by the following paragraphs.

The quality assurance program for the operation of PVNGS 1-3 is presented in the applicant's Operations Quality Assurance Criteria Manual which describes the program by specifying requirements and assigning responsibilities for implementing activities affecting quality associated with the operation of PVNGS 1-3. Nuclear Production Management, Corporate Quality Assurance, the PVNGS staff, and other groups within the applicant's organization that perform quality-related functions are required to develop and implement administrative procedures to prescribe the preparation, review, approval, control, and revision of instructions, procedures, and drawings. These procedures include provisions to ensure that the instructions, procedures, and drawings are reviewed and approved before they are used.

The Corporate Quality Assurance Director is responsible for establishing and implementing the audit program. Using written procedures or checklists, audits are performed by qualified personnel not having direct responsibility in the areas being audited. The quality assurance program established a comprehensive audit system to ensure that the quality assurance program requirements and related supporting procedures are effective and are properly implemented during operations. Audits will include an objective evaluation of (1) quality assurance practices, procedures, and instructions; (2) work areas, activities, processes, and items; (3) the effectiveness of implementation of the quality assurance program; and (4) conformance with policy directives.

The quality assurance program requires documentation of audit results and review by management having responsibility in the area audited to determine and take corrective action as required. Reaudits are performed to determine that nonconformances are effectively corrected and that the corrective action precludes repetitive occurrences. Audit findings, which indicate quality trends and the effectiveness of the quality assurance program, are reviewed by the Corporate Quality Assurance Director and are reported to appropriate management on a regular basis.

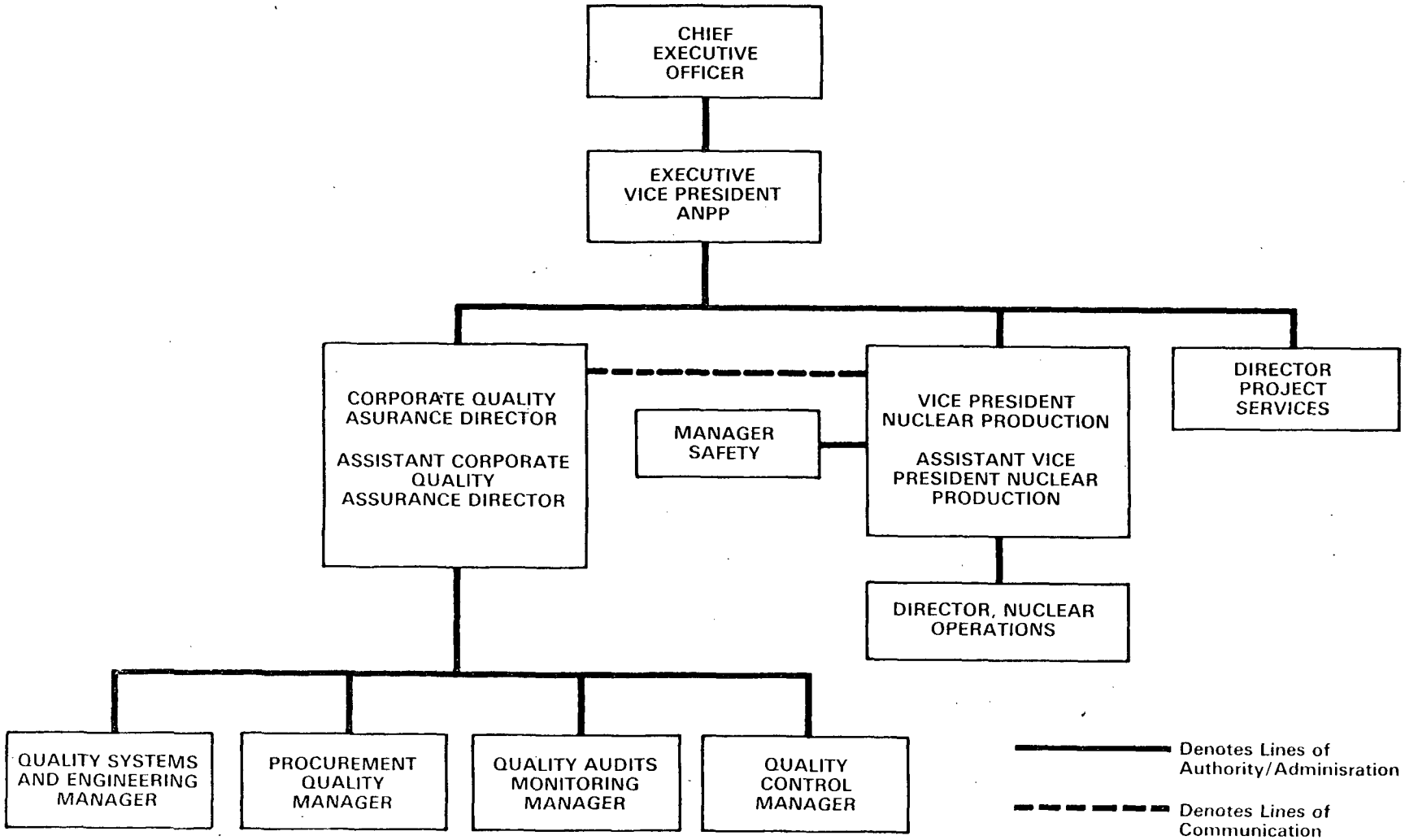

Figure 17.1 Arizona Public Service Company organization for PVNGS operation

22 TMI-2 REQUIREMENTS

22.2 Evaluation of TMI Requirements

I.A.1.1 Shift Technical Advisor

In the PVNGS 1-3 SER, the staff stated that Shift Technical Advisors (STAs) not on duty will also serve as members of the Independent Safety Engineering Group (ISEG). As a result of the applicant's reorganization of nuclear activities, as discussed in Section 13.1 of this supplement, the STA and ISEG functions have been separated. Accordingly, the original statement is no longer applicable. Because this change allows each of these types of positions to have a single, more clearly defined mission, the staff finds this change acceptable.

I.A.2.2 Training and Qualifications of Operations Personnel

In the PVNGS 1-3 SER, the staff stated that the applicant had committed to adapt generic position task analyses developed by the Institute of Nuclear Power Operations (INPO) to fit the positions at PVNGS (as a basis for training) within one year following receipt of the INPO documents (then scheduled for early 1982). By letter dated October 2, 1984, the applicant now states that the INPO task analyses which were to provide a basis for defining the needed training are being received later than originally expected. As an interim measure, the applicant has used INPO training guidelines (not necessarily based on task analyses) as guidance for developing training in the operations and maintenance areas. In addition, job task analyses developed for another utility of similar NSSS design, have been used as a basis for development of training in the areas of mechanical, electrical, and instrumentation and control maintenance.

The applicant is currently validating for applicability to PVNGS a job task analysis for reactor operators obtained through INPO. The applicant states that any necessary revisions to the training programs for operators should be completed during the fourth quarter of 1984. The applicant also states that the goal for completing INPO accreditation for all job areas is within two years after the startup of PVNGS Unit 1.

Although the original schedule was not met, the staff concludes that, based on the evidence of continuing progress in this area, the applicant's program and schedule for fully completing this task are acceptable.

I.D.1 Control Room Design Review

This supplement closes out the open licensing issues of the control room preliminary design assessment (PDA) identified in Supplement No. 6 to the SER. Also, this seventh supplement provides the status of the detailed control room design review (DCRDR), which is not a licensing requirement. The Lawrence Livermore National Laboratory Technical Evaluation Report which provides an evaluation of both the Arizona Public Service (APS) PDA and DCRDR is enclosed as Appendix I to this supplement. Appendix J to this supplement provides a status report for the PVNGS safety parameter display system (SPDS). The PDA issues which required resolution are:

(1) Confirmation of correction of all human engineering discrepancies (HEDs) required prior to licensing.

(2) Clarification of the status of the environmental survey including the lighting survey.

(3) Clarification of the applicant's review of the remote shutdown panel.

An onsite audit of the applicant's implementation of actions to correct HEDs, which had been identified during the PDA of the PVNGS Unit 1 control room, was performed by NRC personnel and their contractors from Lawrence Livermore National Laboratory (LLNL) on October 10 and 11, 1984. The team audited approximately 85% of the total number of 157 HEDs identified in the NRC's, "Human Factors Engineering Control Room Design Review/Audit Report, Palo Verde Nuclear Generating Station," dated October 14, 1981.

Four HEDs which were not satisfactorily corrected were identified during the onsite audit. These are HEDs A-5.9, A-5.14, B-5.9, and B-5.14 which are identified in the applicant's submittals dated June 30, 1983, and March 14, 1984. The resolution of these four HEDs has been deferred to the DCRDR. Further discussion of these HEDs is contained in Appendix I to this supplement. In addition to these four HEDs, the audit team noted that some equipment out-of-service tags used in the control room are sufficiently large enough to obscure control board indicators, control knobs, and component labels. The staff has agreed to defer resolution of these four HEDs and the out-of-service tag problem to the DCRDR phase of review.

In a letter dated October 29, 1984, the applicant clarified the status of its environmental survey, including the lighting survey, and its review of the remote shutdown panel for PVNGS Unit 1. In letters dated December 12 and 20, 1984, the applicant confirmed that corrective actions for all HEDs that are required prior to licensing have been implemented.

On the basis of the onsite audit conducted October 10 and 11, 1984, and review of the applicant's October 29, December 12, and December 20, 1984, submittals, the staff has concluded that the applicant has satisfactorily completed the implementation of those HED corrections required for licensing. In addition to the four HEDs identified above during the onsite audit, HEDs A-1.2, A-1.3, 64, 100, 101b, 138, 172, and A-5.16, have been deferred until after licensing and are included in the DCRDR. The staff has determined that deferring these HEDs to the DCRDR will not affect the safe operation of the plant. The HED corrections made to date have significantly improved the operators' ability to cope with accidents and permit safe operation of the plant. Correction of HEDs deferred to the DCRDR will further enhance the operators' ability to safely operate the plant.

Before exceeding 5% of rated power, the applicant is required to implement actions to correct HEDs A-3.1 and 173 in the control room, and HEDs 151A, 152A, 153A, 154A, 158A, 159B, 161A, 163A, 164A, 165A, and 166A at the remote shutdown panel as per its commitment made in the October 29, 1984, submittal. Additionally, as an interim measure, the staff recommends that APS provide temporary zone markings (i.e., normal operating ranges, alarm setpoints, etc.) on meters and recorders before exceeding 5% power to correct HED B-5.9 described in the applicant's March 14, 1984, submittal. Permanent zone markings on meters and recorders are required before startup after the first refueling outage.

To complete its DCRDR in accordance with the requirements of NUREG-0737, Supplement 1, the applicant will be required to submit a supplemental summary report by August 31, 1985. Among other things, the supplemental summary report shall provide a proposed resolution and schedule for implementation for correcting HED A-5.14 (applicant's June 30, 1983, submittal), HEDs A-5.9, B-5.9, and B-5.14 (applicant's March 14, 1984, submittal), HEDs A-1.2, A-1.3, 64, 100, 101b, 138, 172, and A-5.16 (applicant's October 29, 1984, submittal), and the out-of-service tag problem, which were deferred to the DCRDR. The staff will require that all HEDs deferred to the DCRDR be corrected no later than before startup after the first refueling outage for PVNGS Unit 1.

The applicant is required to provide the following information as a part of the DCRDR Supplemental Summary Report:

- A description of the function and task analysis methodology used and the results of the analysis include:

  (1) Sample checklists
  (2) Sample data sheets
  (3) Documentation of instrument and control needs which address range, accuracy, and availability under emergency conditions.

- A description of the methodology and the results for verifying that selected control room design improvements did provide the necessary corrections of HEDs, and did not introduce new HEDs into the control room.

- A description of the process used to coordinate control room improvements with other emergency response capability requirements.

II.B.3 Post-Accident Sampling Capability

In the PVNGS 1-3 SER, the staff found that the post-accident sampling system (PASS) met seven of the eleven criteria for Item II.B.3 in NUREG-0737.

The following four criteria were unresolved at that time.

Criterion 2: Provide a procedure for relating radionuclide gaseous and ionic species to estimated core damage.

Criterion 8: Verify that backup sampling is capable of providing at least one sample per day for 7 days following onset of the accident, and at least one sample per week until the accident condition no longer exists.

Criterion 10: Describe the procedures for onsite radiological and chemical analyses and provide the accuracy, range, and sensitivity of these analyses in an accident chemistry and radiation environment, i.e., presence of large amounts of fission products and a high radiation field in the samples.

Provide information on (1) testing frequency and type of testing to ensure long-term operability of the post-accident sampling system and (2) operator training requirements for post-accident sampling.

Criterion 11: Verify that the ventilation exhaust from the sample station will be filtered with charcoal adsorbers and high-efficiency particulate air filters.

By letters dated September 27, October 17, and December 5, 1984, the applicant provided additional information on the PASS to address these four criteria. The criteria and the applicant's responses are provided below.

Criterion 2 states that:

> The applicant shall establish an onsite radiological and chemical analysis capability to provide, within the three-hour time frame established above, quantification of the following:
>
> (a) certain radionuclides in the reactor coolant and containment atmosphere that may be indicators of the degree of core damage (e.g., noble gases, iodines and cesiums, and non-volatile isotopes);
>
> (b) hydrogen levels in the containment atmosphere;
>
> (c) dissolved gases (e.g., H_2), chloride (time allotted for analysis subject to discussion below), and boron concentration of liquids;
>
> (d) alternatively, have in-line monitoring capabilities to perform all or part of the above analyses.

The applicant responded that in-line analyses include those for radioactive isotopes (noble gases, iodines, cesium, and nonvolatile isotopes), gross gamma, pH, boron, chlorides, dissolved oxygen and hydrogen, and gaseous oxygen. Gaseous hydrogen will be sampled by the containment hydrogen control systems.

The procedure to be utilized to estimate the degree of core damage was developed from "Development of Comprehensive Procedure Guidelines for Core Damage Assessment," Combustion Engineering Owners Group Task 467, July 1983. The procedure uses radioisotopic analysis data and takes into consideration other physical parameters, such as local core exit thermocouple temperatures, core coolant conditions, hydrogen concentrations, and area radiation levels. The staff finds that these provisions satisfy Criterion 2 and are, therefore, acceptable.

Criterion 8 states that:

> If in-line monitoring is used for any sampling and analytical capability specified herein, the applicant shall provide backup sampling through grab samples, and shall demonstrate the capability of analyzing the samples. Established planning for analysis of offsite facilities is acceptable. Equipment provided for backup sampling shall be capable of providing at least one sample per day for 7 days following onset of the accident, and at least one sample per week until the accident condition no longer exists.

The applicant's response states that in-line analyses will be backed up by grab sample capability in either a depressurized, diluted, or pressurized sample device. The staff has determined that these provisions meet Criterion 8. The applicant must verify backup sampling capability consistent with NUREG-0737 Item II.B.3, Criterion 8, prior to utilization of the in-line system.

Criterion 10 states that:

> Accuracy, range, and sensitivity shall be adequate to provide pertinent data to the operator in order to describe radiological and chemical status of the reactor coolant systems.

The applicant's response states that a quality control program exists to ensure that accuracy, range, and sensitivity of the PASS instruments are adequate to provide pertinent data to the operator in order to describe radiological and chemical status of the reactor coolant system. The PASS has the analytical ranges and accuracies that are consistent with the recommendation of Regulatory Guide 1.97, Revision 3, and the clarification of NUREG-0737 Item II.B.3, Post-Accident Sampling Capability. The analytical methods and instrumentation were selected for their ability to operate in the post-accident sampling environment. Equipment used in post-accident sampling and analyses will be calibrated or tested at least every six months. Retraining of operators for post-accident sampling is scheduled at a frequency of once every six months. The staff finds that these provisions satisfy Criterion 10 and are, therefore, acceptable.

Criterion 11 states that:

> In the design of the post-accident sampling and analysis capability, consideration should be given to the following items:
>
> (a) Provisions for purging sample lines, for reducing plateout in sample line, for minimizing sample loss or distortion, for preventing blockage of sample lines by loose material in the RCS or containment, for appropriate disposal of the samples, and for flow restrictions to limit reactor coolant loss from a rupture of the sample line. The post-accident reactor coolant and containment atmosphere samples should be representative of the reactor coolant in the core area and the containment atmosphere following a transient or accident. The sample lines should be as short as possible to minimize the volume of fluid to be taken from containment. The residues of sample collection should be returned to containment or to a closed system.
>
> (b) The ventilation exhaust from the sampling station should be filtered with charcoal adsorbers and high-efficiency particulate air (HEPA) filters.

The applicant's response states that sample lines can be purged to reduce plateout to ensure proper mixing, to minimize leakage, to prevent blockage, to backflush, to blow down, for appropriate sample disposal, to minimize crud traps, and for passive flow restrictions. The sampling module is connected to the analysis module by short pipes through a shielded wall. Gaseous samples will be returned to containment atmosphere and liquid samples to the reactor drain tank and equipment drain tank.

The ventilation exhaust from the PASS sample station is filtered through HEPA and charcoal filters located in the auxiliary building.

The staff has determined that these provisions satisfy Criterion 11 and are, therefore, acceptable.

On the basis of the above evaluations, the staff now concludes the applicant's post-accident sampling system meets all of the eleven criteria of Item II.B.3 in NUREG-0737. Prior to utilizing the in-line system in accordance with Item II.B.3, the applicant shall demonstrate the capability of the backup grab sample system.

The applicant has advised the staff that because of the need for design modifications, the in-line PASS will not be available until after first refueling. In the interim the backup grab-sampling system will be used to meet the requirements of NUREG-0737 Item II.B.3. This capability will be demonstrated prior to exceeding 5% power operation and the license will be conditioned accordingly.

II.E.1.1 Auxiliary Feedwater System Evaluation

By letter dated December 10, 1984, the applicant identified a proposed change regarding the full flow recirculation line for the auxiliary feedwater (AFW) pumps. Rather than providing position indication on the valves in this line, the applicant states the line will be closed with a blind flange. This line will no longer be utilized for periodic AFW pump surveillance testing, thus precluding the possible operator error of leaving the full-flow recirculation line valve open following testing which could divert AFW flow to the condensate storage tank from the proper path to the steam generators. The staff finds this change acceptable.

II.K.1 IE Bulletin on Measures To Mitigate Small-Break LOCAs and Loss-of-Feedwater Accidents

In a letter dated November 30, 1984, the applicant provided a revision to Section II.K.1.5 of the PVNGS Lessons Learned Implementation Report (LLIR).

The last sentence in the PVNGS LLIR, Section II.K.1.5, states that periodic audits will also be conducted to verify that tagouts are removed and systems returned to normal when the repair/testing has been completed. The applicant stated that this statement is not practical. Between the time that a system is returned to normal and the next periodic audit, the plant status could change so that the system configuration would not be as stated in the restoration document being audited. PVNGS is replacing this statement with the following: "Refer to LLIR response to item I.C.6.F for a discussion of independent verification to insure restoration of systems after repair/testing."

The applicant stated that TMI Item I.C.6.F requires that licensees' procedures ensure that an effective system of verifying the correct performance of operating activities be provided. The PVNGS provides adequate methods for system verification upon completion of testing/repair.

The staff has reviewed the applicant's justification of this change and concluded that it is acceptable.

APPENDIX A

CONTINUATION OF CHRONOLOGY OF RADIOLOGICAL REVIEW

September 17, 1984	Letter from applicant transmitting revised information for FSAR Chapter 13.
September 19, 1984	Letter from applicant forwarding additional information on environmental qualification of equipment.
September 19, 1984	Letter from applicant forwarding additional information on steam generator tube rupture analysis.
September 24, 1984	Letter from applicant advising that pump and valve operability assurance program and the seismic and dynamic qualification program will be completed before fuel loading.
September 24, 1984	Letter from applicant transmitting revised changes to FSAR Chapter 13.
September 26, 1984	Letter from applicant advising staff that contract has been executed with the Department of Energy to comply with the Nuclear Waste Policy Act of 1982.
September 26, 1984	Letter from applicant transmitting "Control Room Fire Spurious Actuation Evaluation."
September 26, 1984	Letter from applicant forwarding information regarding "Documents Relating to Water Leakage From Temporary Lines."
September 27, 1984	Letter from applicant transmitting natural circulation cooldown test procedure.
September 27, 1984	Letter from applicant advising staff (1) of commitment to comply with five license conditions before fuel loading of PVNGS Unit 1 and (2) that installation of post-accident sampling system is complete.
September 27, 1984	Letter from applicant transmitting summary of post-demonstration test inspection on impeller of reactor coolant pump 2B.
September 27, 1984	Letter from applicant confirming discussion items at September 11, 1984, meeting concerning fire protection.
September 27-28, 1984	Meeting with applicant to discuss Technical Specifications.
October 1, 1984	Letter from applicant transmitting Revision 3 of training and qualification plan.

October 2, 1984	Letter from applicant transmitting 1983 financial statements.
October 2, 1984	Letter from applicant transmitting updated responses to revised Questions 13A.17 and 13A.39.
October 2, 1984	Letter from applicant forwarding information on organizational structure.
October 2, 1984	Letter from applicant transmitting information on fire protection modifications and compensatory measures.
October 3, 1984	Letter from applicant forwarding revised emergency plan implementing procedures.
October 3, 1984	Letter from applicant requesting partial exemption to General Design Criterion (GDC) 4.
October 3-5, 1984	Meeting with applicant to discuss Technical Specifications.
October 4, 1984	Letter to applicant transmitting request for additional information.
October 4, 1984	Letter from applicant advising staff of proposed compensatory measures to be taken until fire protection modifications are completed.
October 5, 1984	Letter from applicant providing information on emergency action levels.
October 5, 1984	Letter from applicant forwarding information on voltage levels at safety-related buses.
October 5, 1984	Letter from applicant regarding augmented shift staffing.
October 5, 1984	Letter from applicant transmitting information on net positive suction head for emergency core cooling system pumps.
October 5, 1984	Letter from applicant transmitting response to questions on initial test program.
October 5, 1984	Letter from applicant advising staff that evaluation of common power source and common associated circuits is complete.
October 5, 1984	Letter from applicant transmitting information on safety-related bus voltage measurement.
October 5, 1984	Letter from applicant transmitting figures for steam generator tube rupture analysis.
October 6, 1984	Letter to applicant transmitting request for additional information.

October 9, 1984	Letter from applicant forwarding information concerning fire protection.
October 9, 1984	Letter from applicant transmitting FSAR changes reflecting revision to shutdown cooling design pressure.
October 9, 1984	Letter from applicant in response to Section 2.2.2 of Generic Letter 83-28.
October 9-10, 1984	Meeting with applicant to discuss resolution of the remaining issues on environmental qualification.
October 10, 1984	Letter to applicant requesting additional information on control element assembly (CEA) shroud assembly.
October 10-11, 1984	Meeting with applicant to discuss testing provisions for engineering safety features actuation system actuation devices during power operation.
October 10-11, 1984	Meeting with applicant to perform audit of control room design review.
October 11, 1984	Letter from applicant advising that proprietary copies of CEN-271 were provided at September 20, 1984, meeting, and nonproprietary copies are being provided to project manager.
October 12, 1984	Letter from applicant transmitting revised changes to FSAR Chapter 17.
October 12, 1984	Letter from applicant transmitting proposed change to FSAR Section 1.8 concerning exceptions to Regulatory Guide (RG) 1.143.
October 15, 1984	Letter from applicant transmitting proposed change to FSAR Section 1.8 concerning exception to American National Standards Institute (ANSI) Standard N18.17.
October 15, 1984	Letter from applicant transmitting proposed change to FSAR Section 1.8 concerning exception to RG 1.68.
October 15, 1984	Letter from applicant transmitting nonproprietary documents on CEA shroud assembly that were not received with August 15, 1984, letter.
October 15, 1984	Letter from applicant transmitting proposed change to FSAR Section 1.8 concerning clarifications to ANSI Std. N18.7.
October 15, 1984	Letter from applicant transmitting FSAR pages that reflect the use of RG 1.68.3 in lieu of RG 1.80.

October 15, 1984	Letter from applicant transmitting proposed change to FSAR Section 1.8 clarifying position regarding RG 1.58 and eliminating the distinction between construction and operational phase activities.
October 16, 1984	Generic Letter 84-21, "Long-Term Low Power Operation," issued.
October 16, 1984	Letter from applicant forwarding "Fire Event Safe Shutdown Evaluation: Outside Control Room Fire Spurious Actuation Study."
October 16, 1984	Letter from applicant concerning fire protection.
October 17, 1984	Letter from applicant forwarding information on gaseous effluents monitoring.
October 17, 1984	Letter from applicant transmitting "Development of the Comprehensive Procedure Guideline for Core Damage Assessment," July 1983.
October 18, 1984	Letter from applicant transmitting proposed change to FSAR Section 1.8 concerning exception to RG 1.83.
October 18, 1984	Letter from applicant transmitting proposed changes to FSAR Section 1.8 concerning clarification regarding RGs 1.38 and 1.123.
October 18, 1984	Letter from applicant transmitting proposed change to FSAR Section 1.8 concerning an exception to ANSI Std. N45.2.4.
October 19, 1984	Letter to applicant regarding vital area barriers related to physical security plan.
October 24, 1984	Letter from applicant forwarding curves for steam generator tube rupture analysis that supersede those submitted on October 5, 1984.
October 24, 1984	Letter from applicant regarding NUREG-0654, "Criteria for Preparation and Evaluation of Radiological Emergency Response Plans and Preparedness in Support of Nuclear Power Plants."
October 24, 1984	Letter from applicant forwarding information regarding welding used to attach tie rod plate to CEA tube in the CEA shroud assembly.
October 25, 1984	Letter from applicant forwarding information on operating shift staffing.
October 25, 1984	Letter from applicant advising staff of auxiliary spray modifications.

October 29, 1984	Letter from applicant forwarding request for extension of latest construction completion date for PVNGS Unit 1 from December 31, 1984, to March 31, 1985.
October 29, 1984	Letter from applicant forwarding information on control room design review.
October 29, 1984	Letter from applicant transmitting proposed change to FSAR Section 1.8 concerning clarification and proposed exception to ANSI Std. N45.2.12.
October 29, 1984	Letter from applicant transmitting changes to preoperational test descriptions described in FSAR Section 14B.
October 29, 1984	Letter from applicant forwarding information on equipment qualification.
October 30, 1984	Letter from applicant transmitting solid radwaste process control program.
October 31, 1984	Letter from applicant forwarding "Probabilistic Assessment of Uncontrolled Deboration Event With Control Room Fire."
October 31, 1984	Letter from applicant concerning alternate shutdown capability probabilistic risk assessment.
November 1, 1984	Letter from applicant forwarding Revision 0 to Offsite Dose Calculation Manual.
November 1, 1984	Letter from applicant regarding compliance with GDC 21 insofar as engineered safety features actuation system.
November 5, 1984	Letter from applicant transmitting revised FSAR pages reflecting changes due to field testing results.
November 5, 1984	Letter to applicant transmitting Supplement No. 6 to Safety Evaluation Report.
November 7, 1984	Meeting with applicant to discuss operating experience for shift staffing.
November 13, 1984	Letter from applicant forwarding revised results of evaluation of the spurious actuation of control room fires.
November 13, 1984	Letter from applicant forwarding response to Question 6 of October 6, 1984, letter.
November 13, 1984	Letter from applicant forwarding amended request for extension of PVNGS Unit 2 construction permit completion date.

November 13, 1984	Letter from applicant forwarding "Control Room Fire Spurious Actuation Evaluation," Revision 1, and report on fire safe shutdown evaluation outside control room.
November 14, 1984	Letter from applicant forwarding supplemental information on SMA welding in the CEA shroud.
November 15, 1984	Letter from applicant transmitting Revision 7 to security plan.
November 15, 1984	Letter from applicant forwarding revised information concerning exception to RG 1.33.
November 16, 1984	Letter to applicant regarding guard training and qualification plan.
November 16, 1984	Letter from applicant forwarding response to October 6, 1984, letter.
November 20, 1984	Letter from applicant providing clarification of non-destructive examination performed on the CEA shroud plate weld.
November 21, 1984	Letter from applicant requesting schedular exemption to 10 CFR 50, Appendices A and K.
November 21, 1984	Letter from applicant advising staff of fire protection modifications and proposed compensatory measures.
November 21, 1984	Letter from applicant forwarding proposed changes to FSAR Section 17.2.
November 26, 1984	Letter from applicant forwarding information on shutdown cooling relief valve operability.
November 26, 1984	Letter from applicant forwarding fixed nuclear facility emergency response offsite plan.
November 28, 1984	Letter from applicant advising staff of response to proposed license conditions discussed in Supplement Nos. 1 and 5 to Safety Evaluation Report concerning conformance to Office of Inspection and Enforcement Bulletin 80-06 and low-temperature overpressure protection alarms.
November 28, 1984	Letter from applicant forwarding evaluation of multiple high impedance cable failures.
November 29, 1984	Letter from applicant concerning qualification of core protection calculator/plant monitoring system data link.
November 29, 1984	Letter from applicant regarding overvoltage protection.

November 29, 1984	Letter from applicant advising staff of elimination of the Federal Telecommunications System telephone from, and the incorporation of the health physics network into, the emergency communication system.
November 30, 1984	Letter from applicant forwarding revision to "Lessons Learned Implementation Report."
November 30, 1984	Letter from applicant forwarding clarification to Footnote 7(h) of FSAR Table 3.2-1.
December 3, 1984	Letter from applicant forwarding information on equipment qualification.
December 3, 1984	Letter from applicant regarding emergency preparedness dose assessment capability.
December 3, 1984	Letter from applicant forwarding marked-up copy of final draft of Technical Specifications and providing certification reflecting design and anticipated operation.
December 3, 1984	Letter from applicant advising staff of the addition of a corporate advisor and forwarding copy of résumé.
December 3, 1984	Letter from applicant advising of inclusion of Appendix R spurious actuation analysis.
December 3, 1984	Letter from applicant forwarding proprietary and non-proprietary Phase I and II software verification test reports and core protection calculator/control element assembly calculator data base listing.
December 4, 1984	Letter from applicant providing clarification of control room staffing during an emergency.
December 4, 1984	Letter from applicant advising staff of addition of ASME Code Case N-238 to FSAR Table 5.2-2 list of code cases used.
December 4, 1984	Letter from applicant forwarding information on public information on emergency planning for emergency planning zone residents.
December 4, 1984	Letter from applicant forwarding responses to questions concerning steam generator tube rupture analysis.
December 4, 1984	Letter from applicant forwarding information on prompt notification system.
December 4, 1984	Letter from applicant concerning operating shift staffing.
December 4, 1984	Letter from applicant forwarding information concerning shutdown cooling system upgrade.

December 5, 1984	Letter from applicant forwarding revised information regarding appropriate closure times with regard to field testing results.
December 5, 1984	Letter from applicant requesting schedular exemption from 10 CFR 50 Appendix A.
December 5, 1984	Letter from applicant requesting schedular exemption concerning post-accident sampling system analyses.
December 5, 1984	Letter from applicant transmitting revision to Offsite Dose Calculation Manual.
December 5, 1984	Letter from applicant regarding fire protection modification and compensatory measures.
December 5, 1984	Letter from applicant regarding RG 1.97 type A variable list.
December 7, 1984	Letter from applicant forwarding information on Appendix R spurious actuation analysis.
December 7, 1984	Letter from applicant forwarding information on seismic qualification program.
December 7, 1984	Letter from applicant forwarding listing of correspondence submitted for which FSAR, emergency plan, and Combustion Engineering Standard Safety Analysis Report (CESSAR) FSAR changes have not yet been made.
December 7, 1984	Letter from applicant regarding auxiliary pressurizer spray modification.
December 7, 1984	Letter from applicant advising staff of addition of ASME Code Case N71-7 to list of code cases used.
December 7, 1984	Letter from applicant advising staff that the environmental qualification program for Class 1E electrical equipment located in a harsh post-accident environment has been completed with the exception of the justifications for interim operation provided in letters dated September 10 and December 3, 1984, and in attachment to this letter.
December 7, 1984	Letter from applicant requesting exemption from certain requirements of Appendix J to 10 CFR 50.
December 7, 1984	Letter from applicant advising staff that safety-related mechanical equipment qualification program is complete.
December 7, 1984	Letter from applicant forwarding Revision 4 to training and qualification plan.

December 7, 1984	Letter from applicant concerning fire protection.
December 10, 1984	Letter from applicant providing information regarding commitments to Supplement 1 to NUREG-0737, response to Generic Letter 82-33.
December 10, 1984	Letter from applicant confirming that pump and valve operability assurance program is complete with certain exceptions.
December 10, 1984	Issuance of order extending construction completion date for PVNGS Unit 2 to December 31, 1985.
December 10, 1984	Letter from applicant forwarding summary of changes to responses regarding fire protection.
December 10, 1984	Letter from applicant transmitting draft proposed FSAR changes regarding radwaste systems and effluent streams.
December 10, 1984	Letter from applicant transmitting draft proposed FSAR changes concerning exceptions to ASME Code requirements.
December 10, 1984	Letter from applicant transmitting draft proposed FSAR changes concerning balance-of-plant systems.
December 10, 1984	Letter from applicant transmitting proposed FSAR changes concerning fire protection.
December 10, 1984	Letter from applicant transmitting draft proposed FSAR changes concerning low-pressure safety injection pumps.
December 10, 1984	Letter from applicant transmitting draft proposed FSAR changes concerning welding and tendon sheathing.
December 10, 1984	Letter from applicant transmitting draft proposed FSAR changes on the nuclear sampling system.
December 10, 1984	Letter from applicant transmitting draft proposed FSAR changes on operator staffing and qualifications.
December 10, 1984	Letter from applicant transmitting draft proposed FSAR changes on the engineered safety features actuation system sequencer and diesel generator starting.
December 10, 1984	Letter from applicant transmitting draft proposed FSAR revisions of the list of drawings and Chapter 16.
December 10, 1984	Letter from applicant transmitting draft proposed FSAR changes on instrumentation and controls.
December 10, 1984	Letter from applicant transmitting draft proposed FSAR changes on radiation protection design features.

December 10, 1984	Letter from applicant transmitting draft proposed FSAR changes to containment isolation valve systems.
December 10, 1984	Letter from applicant transmitting draft proposed FSAR changes on electrical systems.
December 10, 1984	Letter from applicant requesting amendments to construction permits for PVNGS Units 2 and 3 to modify description of certain pipe whip restraints and jet impingement shields.
December 12, 1984	Letter from applicant transmitting draft proposed FSAR changes on electrical separation (RG 1.75).
December 12, 1984	Letter from applicant concerning control room design review.
December 12, 1984	Letter from applicant regarding submittals of proposed FSAR changes, indicating evaluation of potential safety significance.
December 13, 1984	Letter from applicant providing additional information concerning request for exemptions to 10 CFR 50, Appendix J.
December 13, 1984	Letter from applicant providing confirmation of installation of fire detectors and remote shutdown panel T_{cold} indication before fuel loading.
December 13, 1984	Letter from applicant concerning fire protection program.
December 13, 1984	Letter from applicant providing clarification to responses concerning equipment qualification.
December 14, 1984	Letter from applicant providing certification regarding design, construction, and preoperational testing of PVNGS Unit 1.
December 14, 1984	Letter from applicant regarding reactor coolant system main pressurizer spray.
December 17, 1984	Letter from applicant providing additional information explaining and justifying deletion of design criteria for slope spent resin lines.
December 17, 1984	Letter from applicant transmitting draft proposed FSAR changes on natural circulation cooldown testing.
December 17, 1984	Letter from applicant transmitting "Regulatory Guide 1.75 Low Energy Circuit Analysis."
December 18, 1984	Letter from applicant advising staff of commitment to add Class 1E overvoltage protection isolation relays to non-Class 1E control circuitry for certain valves.

December 18, 1984	Letter from applicant concerning ASME Code, Section XI, inspection of spent fuel pool cooling pumps.
December 18, 1984	Letter from applicant providing information on radwaste and as low as reasonably achievable criterion.
December 18, 1984	Two letters from applicant regarding electrical separation (exception to RG 1.75).
December 18, 1984	Letter from applicant providing additional information in response to Generic Letter 83-28.
December 18, 1984	Letter from applicant regarding post-final design approval proposed changes to CESSAR FSAR.
December 19, 1984	Letter from applicant regarding additional post-final design approval proposed changes to CESSAR FSAR.
December 19, 1984	Letter from applicant listing documents for a future FSAR amendment.
December 20, 1984	Letter from applicant providing comments on draft license for PVNGS Unit 1.
December 20, 1984	Letter from applicant providing additional information concerning ASME Code, Section XI, inspection of spent fuel pool cooling pumps.
December 20, 1984	Letter from applicant regarding analysis of changes to HPSI and LPSI systems.
December 20, 1984	Letter from applicant regarding completion of corrective actions for control room.
December 21, 1984	Letter from applicant providing additional information for proposed changes to CESSAR FSAR submitted by letter dated December 18, 1984.
December 21, 1984	Letter from applicant providing a design change to pressurizer spray line.
December 21, 1984	Letter from applicant providing status of qualification for Limitorque valve operators.
December 26, 1984	Letter from applicant regarding completion of qualification for Limitorque valve operators.
December 26, 1984	Letter from applicant certifying final draft version of Technical Specifications for PVNGS Unit 1 dated December 21, 1984.
December 26, 1984	Letter from applicant regarding actions to enhance operator preparedness.

APPENDIX B

REFERENCES

Arizona Public Service Co. reports

"Response to NRC Request for Additional Geotechnical Information," June 1984.

EPIP-14A, "Release Rate Determination," Rev. 3.

EPIP-14B, "Initial Dose Assessment," Rev. 2.

EPIP-15, "Protective Action Guidelines," Rev. 2, July 1984.

"Palo Verde Nuclear Generating Station Emergency Plan," Rev. 3, Oct. 1983.

Combustion Engineering Owners Group report

"Development of Comprehensive Procedure Guidelines for Core Damage Assessment," July 1983.

Federal Emergency Management Agency memorandum

Memorandum to NRC, Nov. 28, 1984, transmitting the FEMA exercise reports for the full-participation exercises conducted at the PVNGS site on May 11, 1983, and September 26, 1984.

U.S. Nuclear Regulatory Commission reports

Generic Letter 84-16, June 14, 1984.

NUREG-0588, "Interim Staff Position on Environmental Qualification of Safety-Related Electrical Equipment," July 1981.

NUREG-0612, "Control of Heavy Loads at Nuclear Power Plants, Resolution of Generic Technical Activity A-36," July 1980.

NUREG-0654/FEMA-REP-1, Rev. 1, "Criteria for Preparation and Evaluation of Radiological Emergency Response Plans and Preparedness in Support of Nuclear Power Plants," Nov. 1980.

NUREG-0731 (draft), "Guidelines for Utility Management, Structure and Technical Resources," Sept. 1980.

NUREG-0737, "Clarification of TMI Action Plan Requirements," Nov. 1980.

NUREG-0800, "Standard Review Plan for the Review of Safety Analysis Reports for Nuclear Power Plants," LWR Edition, July 1981.

APPENDIX E

ABBREVIATIONS

ACI	American Concrete Institute
ADV	atmospheric dump valve
AFW	auxiliary feedwater
ANPP	Arizona Nuclear Power Project
ANS	American Nuclear Society
ANSI	American National Standards Institute
APS	Arizona Public Service Co.
APS	auxiliary pressurizer spray
ASME	American Society of Mechanical Engineers
ASTM	American Society for Testing and Materials
AWP	automatic withdrawal prohibit
AWS	American Welding Society
BTP	Branch Technical Position
BWR	boiling-water reactor
CE	Combustion Engineering
CEA	control element assembly
CEAC	core element assembly calculator
CEC	Corporate Emergency Center
CEDM	control element drive mechanism
CEDMCS	control element drive mechanism control system
CESSAR	Combustion Engineering Standard Safety Analysis Report
CFR	Code of Federal Regulations
COE	Corps of Engineers, U.S. Army
CPC	core protection calculator
CRACS	Chemical and Radiological Analysis Computer System
CS	containment spray
CVAP	comprehensive vibration assessment program
CVCS	chemical and volume control system
DCP	design change package
DCRDR	detailed control room design review
DER	deficiency evaluation report
EAL	emergency action level
ECCS	emergency core cooling system
EOF	Emergency Operational Facility
EPIP	Emergency Plan Implementing Procedure
EPRI	Electric Power Research Institute
EPZ	emergency planning zone
ESF	engineered safety feature
ESFAS	engineered safety feature actuation system
EVP	Executive Vice President
FEMA	Federal Emergency Management Agency
FMEA	failure modes and effects analysis
FPER	Fire Protection Evaluation Report
FSAR	Final Safety Analysis Report
GDC	General Design Criterion
HED	human engineering discrepancy
HELB	high-energy line break

HEPA	high-efficiency particulate air
HFT	hot functional testing
HPCS	high-pressure core spray
HPSI	high-pressure safety injection
HVAC	heating, ventilation, and air conditioning
ICCI	inadequate core cooling instrumentation
INPO	Institute of Nuclear Power Operations
IR	Ingersoll Rand
ISEG	Independent Safety Engineering Group
JIO	justification of interim operation
KSB	Klein Schanzlin & Becker
LLIR	Lessons Learned Implementation Report
LLNL	Lawrence Livermore National Laboratory
LOCA	loss-of-coolant accident
LPSI	low-pressure safety injection
LTOP	low-temperature overpressure protection
MFIV	main feedwater isolation valve
MFWIV	main feedwater isolation valve
ML&P	metal lath and plaster
MOV	motor-operated valve
MSIV	main steam isolation valve
MSLB	main steamline break
MSSS	main steam support structure
NDE	nondestructive examination
NFPA	National Fire Protection Association
NPSH	net positive suction head
NRC	U.S. Nuclear Regulatory Commission
NSG	Nuclear Safety Group
NSSS	nuclear steam supply system
PASS	post-accident sampling system
PDA	preliminary design assessment
PIV	pressure isolation valve
PMS	plant monitoring system
PORV	power-operated relief valve
PPS	plant protection system
PRA	probabilistic risk assessment
PVNGS 1-3	Palo Verde Nuclear Generating Station, Units 1, 2, and 3
PWR	pressurized-water reactor
QA	quality assurance
QC	quality control
RCP	reactor coolant pump
RCS	reactor coolant system
RG	Regulatory Guide
RRS	reactor regulating system
RTD	resistance temperature detector
RWST	refueling water storage tank
SBCS	steam bypass control system
SCS	shutdown cooling system
SDCS	shutdown cooling system
SER	Safety Evaluation Report
SGTR	steam generator tube rupture
SLB	steamline break
SLBFPLOP	steamline break during full-power operation with concurrent loss of offsite power

SMAW	shielded metal arc welding
SPDS	safety parameter display system
SRO	Senior Reactor Operator
SRS	solid radwaste system
STA	Shift Technical Advisor
TGSCC	transgranular stress corrosion cracking
TSC	Technical Support Center
UGS	upper guide structure
UL	Underwriter's Laboratories

APPENDIX F

PRINCIPAL CONTRIBUTORS

Name	Issue
E. Licitra	Project management
R. Becker	Procedures
W. Belke	Quality assurance
S. Chan	Structural engineering
O. Chopra	Power systems
H. Conrad	Materials engineering
C. Gaskin	Security program
J. Guo	Containment systems
J. Halapatz	Materials engineering
G. Hammer	Mechanical engineering
J. Holonich	Auxiliary systems
J. Huang	Containment systems
J. Jackson	Equipment qualification
J. Kane	Geotechnical engineering
F. Kantor	Emergency planning
D. Kubicki	Fire protection
M. Lamastra	Radiation protection
G. Lapinski	Control room design
J. Lee	Effluent treatment
C. Liang	Reactor systems
C. Nichols	Effluent treatment
J. Page	Mechanical engineering
R. Ramirez	Control room design
M. Schoppman	Licensee qualification
H. Shaw	Mechanical engineering
R. Stevens	Instrumentation and controls
J. Wermeil	Auxiliary systems
J. Wing	Chemical engineering
R. Wright	Equipment qualification
G. Zwetzig	Licensee qualification

APPENDIX G

U.S. ARMY CORPS OF ENGINEERS: TECHNICAL REPORT

DEPARTMENT OF THE ARMY
TULSA DISTRICT, CORPS OF ENGINEERS
POST OFFICE BOX 61
TULSA, OKLAHOMA 74121

REPLY TO
ATTENTION OF:

October 5, 1984

Engineering/Geotechnical

Mr. G. Lear
Chief, Structural and Geotechnical
Engineering Branch
Mail Stop P-214
Nuclear Regulatory Commission
Washington, D.C. 20555

Dear Mr. Lear:

Reference Interagency Agreement Number NRC-03-82-102, Task Work Order No. 4.

As outlined in the referenced agreement, we are submitting our geotechnical report on the adequacy of the foundation soils for the Palo Verde Nuclear Generating Station.

Sincerely,

Donald R. Henderson
Weldon M. Gamel
Chief, Engineering Division

Enclosure

Copy Furnished:

DAEN-CWE-SS/Pritchett

GEOTECHNICAL ENGINEERING CASE REVIEW

Synopsis. A geotechnical engineering case review of a potential foundation deficiency at the Palo Verde Nuclear Generating Station was performed by the Tulsa District Corps of Engineers. The potential deficiency resulted when several temporary water lines buried in foundation soils broke and eroded fill beneath and around several structures. An extensive investigation and evaluation was performed by the licensee (Arizona Public Service Company). Based on a review of this work the Corps has concluded that the measures taken by the licensee in evaluation of the potential problem are reasonable and adequate. It was further concluded that the pipe breaks did not significantly affect the soils supporting Category 1 structures.

Introduction. This report presents the results of the Corps of Engineers' geotechnical review of various documents describing potential foundation problems resulting from broken water lines buried in the foundation soils of the Palo Verde Nuclear Generating Station (PVNGS), Phoenix, Arizona. The review also included a site visit and a meeting with key personnel involved with the problem and resulting investigation. Inclosure 1 is a complete list of documents provided for review. These documents contain detailed descriptions of the potential problem, the procedures used for its evaluation, as well as the applicant's conclusions and remedial treatment. The following paragraphs provide a summary of the information presented in these documents along with the Corps of Engineers' comments.

Description of Potential Problem. Several temporary water lines that run through the backfill at PVNGS Units 1, 2 and 3 developed leaks which resulted in erosion of an estimated 2 to 3 cubic yards of fill at Units 1 and 2. At Unit 3 the leakage consisted of clear water with no erosion occurring at the time the leakage was discovered. A negligible amount of soil was noted at the seepage exit point but the leakage continued to flow clear until the water line was shut off. The leaks were detected in September 1981, January 1980 and December 1981 for Units 1, 2 and 3, respectively. The exit point for the leakage and soil erosion at units 1 and 2 was into the seismic gap and dead space between the Auxiliary and Control Buildings while the exit point for the leakage at Unit 3 was into the equipment hatch near the southwest corner of the Auxiliary Building. In each case the primary concern under evaluation was the ability of the backfill affected by the pipe leaks to properly support critical structures. Detailed descriptions of the potential problem at each unit can be found in Documents Number 7, 14 and 17 listed on Inclosure 1.

Site Visit and Meeting. A site visit was made on the morning of August 22, 1984 to inspect the areas in each of the three units where water leakage was known to occur. Following the site visit a meeting was held with key personnel involved with the problem and its investigation. The purpose of the site visit and meeting was to obtain a better understanding of the potential problem. Inclosure 2 is a summary of the site visit and meeting with both the agenda and list of attendees attached. Included with the agenda is a list of questions and comments based on the Corps of Engineers preliminary review of the available documents. Also included was a list of additional reports requested by the Corps of Engineers for their review. The information requested

included geology, soils and foundation design data. Document Number 18 of Inclosure 1 contained the requested information. The Corps had several comments and questions prior to the site visit that were based on a preliminary review of the information submitted. Some of the comments are discussed in the site visit report (Inclosure 2). Those not discussed in Inclosure 2 are listed below:

Comment: During the grouting program it is noted that the largest excess grout take occurred at Unit 3. No eroded fill materials were observed at the reported exit point. Undetected piping may have occurred. What are the potential consequences of undetected erosion of fill in this and other areas?

Response: The fill placement procedures were designed to eliminate the possibility of a subterranean channel developing that could permit large quantities of soil washing out. In addition, the character of the natural soils, against which the backfill is placed, is such that fill could not erode into these materials. The possibility of a leak large enough to transport soil in quantities significant enough to impact foundation conditions yet remain undetected is inconceivable.

Comment: No discussion of settlement of equipment hatch or potential loss of support under this structure or adjacent wing of the Auxiliary Building at Unit 3 was provided. Explain why these items were not discussed, considering the leakage that exited into the settlement hatch and the possibilities of undetected erosion.

Response: The equipment hatch is a non-critical structure in which excessive settlement will cause no safety problems. The safety related Auxiliary Building on the other hand was analyzed with the conservative assumption of total loss of support under a 20 x 35 foot area at the corner nearest the leak. These items are discussed in detail in APS Final Report-DER 81-55 which was provided at the meeting.

Geotechnical Investigations.

General. Geotechnical investigations were conducted by Bechtel Construction and Ertec Western, Inc. under direction of Bechtel Engineering. The purpose of the investigations was to locate the source of the water leaks and to assess the condition of the backfill affected by the leaks. The investigations consisted of:

- Pressure tests of the water lines

- Hand probing behind the seismic gap cover plate in Unit 1

- Cone Penetrometer Tests (CPT) and "undisturbed" soil sampling between the Auxiliary and Control Buildings in Units 1 and 2

- Laboratory testing on selected samples to determine moisture content, density, and grain size characteristics of backfill

- Review of in-place moisture-density test data obtained during fill placement in the areas of interest

- Review of structural settlement records.

Pressure Tests. The results of the pressure tests are summarized in Table 1 of Document Number 8, Inclosure 1. All temporary water lines were tested for leaks. Packers were used to determine location of the leak where bends in the pipe did not preclude their use. Manometer testing was used on sloping water lines to determine the elevation of the leak. It is noted that the exit point for each of the various leaks was the closest opening to all of the known or suspected leakage points.

Hand Probing. The probing behind the seismic gap cover plate showed no voids or soft zones in the one small area tested. This showed that any damage which may have occurred was limited in area.

Cone Penetrometer Tests. Cone Penetrometer Tests (CPT) were confined to the dead space between the Auxiliary and Control Buildings where the condition of backfill could be investigated without coring through foundation slabs. At both units the CPT's disclosed the presence of zones of low-strength backfill soils beneath the axis of the dead space. Undisturbed sampling was undertaken adjacent to the CPT locations to evaluate the nature of the low strength zones.

Laboratory Tests. Results of the laboratory testing on recovered samples indicated that the density of soils within the low strength zones was substantially lower than densities measured during fill placement. Similarly, the moisture contents of sampled soils was consistently higher than those measured during fill placement.

Construction Control Records. The fill placement records were reviewed to assess the condition of the backfill prior to the pipe leaks. Specifications required backfill to be compacted to dry densities in excess of 95 percent of maximum (ASTM D-1557). Compliance with these specifications was verified by in-place density testing at a frequency of one test per 100 cubic yards in Unit 1 and one test per 55 cubic yards in Units 2 and 3. All failing tests required the fill to be replaced or reworked until the specified densities were obtained. In open areas, the fill was compacted using heavy vibratory rollers. In confined areas and within 2 feet of structural walls, compaction was accomplished using hand-operated plate compacters (wackers). Pogo sticks were used to a very limited extent, usually to compact fill around pipelines. In the areas of concern (beneath the foundations of the Control Building and wing section of the Auxiliary Building) the great majority of fill was compacted by heavy vibratory rollers.

Structural Settlement Records. Settlement records of critical structures in all three units show no significant trends that could be attributed to

weakening of foundation soils due to pipe leaks. The maximum increase in total settlement recorded from the time of the pipe breaks until early 1984 was 0.3 inches for structures whose construction was completed before the pipe breaks occurred. Structures that were still under construction experienced slightly more settlement because of the additional construction. In all cases, however, post construction total settlements were well below the nominal design limit of 1.5 inches. Furthermore, the settlements for all structures appear to have stabilized and remain within tolerable limits.

Licensee Evaluation. The licensee in their approach to the problem chose to consider the worst possible case and assume the pipe leaks had caused total loss of support under a conservatively large area of the wing of the Auxiliary Building closest to the pipe break and then perform a stability analysis to determine what effect this assumption makes. The area assumed to have lost complete soil support was a 20- by 35-foot strip. The 20-foot width was taken from the outside south edge of the Auxiliary Building. The farthest northward pipe leak was a distance of 6'4" from that south edge under the wing of the Auxiliary Building. The affected area was assumed to extend two to three feet beyond the pipe location. Therefore, for the reanalysis to be conservative, a value of twice this distance was used, or after rounding up, 20 feet. The 35-foot dimension was taken as the nominal total length of the wing of the Auxiliary Building. The reanalysis conservatively assumed that all resulting loads caused by loss of support under this area would be carried by the outer wall acting as a corbel. The results of the reanalysis show the amount of reinforcing steel provided in the wall is adequate to resist all loads within design allowable stresses, even under seismic loading.

The Control Building is the only other Category 1 structure near the pipe breaks and it is beyond the points where leakage occurred and where the leaking water finally exited. It is difficult to conceive of any soil movement from the direction of this building. Also there is no evidence to suggest that the soil directly beneath the Control Building has experienced any erosion. However, it can be postulated that the projection of an angular zone of loading from the north edge of the Control Building would intercept a zone affected by the leaks. The affect of this zone on the total stability of the Control Building is considered to be negligible since the area of reduced soil density compared to the total area of the Control Building foundation is small. Additionally, from a review of settlement data no abnormal settlement has been noted for the Control Building.

The settlement records for all the buildings within the complex also show no abnormal settlement. This fact combined with the results of the stability analysis described above convinced the licensee that no remedial action other than grouting all temporary pipelines was necessary.

Corps of Engineers Evaluation. The licensee has done a thorough job of investigating the potential problem and documenting the results of his studies. The information presented above is but a brief summary of the principal features from the documents submitted for review. The Corps of Engineers is in general agreement with the licensee on the overall adequacy of the foundation soils and offers the following comments in support of this opinion.

The great majority of the backfill was compacted with heavy vibratory compaction equipment that will produce a uniformly compacted fill when the soil is placed in horizontal lifts not to exceed 9 inches as specified. The average "as placed" relative compaction was about 98 percent maximum density (ASTM D-1557) with no tests showing less than 95 percent. The frequency of quality assurance testing was adequate. The compaction procedures combined with the frequency of quality assurance testing makes it very unlikely that any significant areas of low density fill existed in machine compacted zones prior to the pipe breaks. The backfill materials classified as silty sands with less than 30 percent silt and design tests on these materials showed that saturation would have negligible effect on the strength or compressibility of the fill when placed at no less than 95% maximum density.

The hand compaction equipment used to compact fill around pipelines and within 2 feet of structural walls is more likely to produce zones to fill with low density but these areas would represent a negligible amount of fill. The location of the hand compacted zones which is generally along the sides and between buildings is another factor that reduces the potential effect these zones could have on the structures which are supported almost exclusively on fill compacted with heavy vibratory equipment.

The most probable location of the seepage paths is another factor that minimizes the potential problems that could result from the pipe leaks. The most probable seepage paths for the leakage in each case are along the pipes themselves and along the wall of the Auxiliary Building. This is due to the fact that water will follow the path of least resistance which will most likely by found along the pipelines and along the walls of the Auxiliary Buildings where the backfill was compacted with hand equipment. In each case, zones of hand compacted soils existed in practically unbroken lengths from the pipe breaks to the exit point for the leakage. Since the great majority of these areas are along the sides of Catagory 1 structures rather than under the foundation, the saturation of these soils would have negligible effect on these structures.

The dense condition of the fill compacted with heavy vibratory equipment would prevent any significant amount of flow through these soils except where hydraulic fracturing may have occurred. Hydraulic fracturing of soil occurs when the water pressure within the soil exceeds the minor prinicpal stresses within the soil. Again, the soils most likely to experience hydraulic fracturing would be the hand compacted fills since they would be expected to have lower stresses. If hydraulic fracturing did occur in the dense machine compacted fill, it would have occurred relatively close to the point of the pipe break because the water pressure would quickly dissipate as the flow distance increased from the point of the pipe break. Any damage to the fill due to hydraulic fracturing would be limited to a small zone along the fracture which is most likely to be a vertical crack due to the usual orientation of the minor prinicpal stresses. Since all temporary pipelines

were relatively close to the walls of the Auxiliary Buildings, it is probable that the great majority of the seepage path for each leak remained almost exclusively within the hand compacted fill zones. Likewise, all soil erosion that occurred would have taken place within these zones. The mechanics of soil erosion (piping) is such that it begins at the point of exit and progresses back toward the source of the leak. It would be expected that most of the soil that eroded into the seismic gap and dead space between the Auxiliary and Control Building came from near the exit points with very little if any soil eroding from under Category 1 structures. Based primarily on the reasons listed above it is very unlikely that any significant amount of soil under a Category 1 structure was affected by the pipe breaks.

One section of pipe did pass under the wing of the Auxiliary Building but the reanalysis performed by the licensee in which total loss of support under this corner of the building was assumed is conservative considering the relatively small amount of soil that was likely affected by the pipe break. The settlement records which show no abnormal settlement after the pipe breaks lends further support to the conclusion that no significant damage to the fills supporting Category 1 structures occurred as a result of the pipe breaks.

Conclusion and Recommendations. The measures taken in evaluation of the potential problems due to the pipe breaks are reasonable and adequate and the conclusion of the geotechnical review is that the pipe breaks did not significantly affect the soils supporting Category 1 structures. This conclusion is based on the probable location of the seepage paths and the effect of potential damage on critical structures. The probable seepage paths would have concentrated potential damage to narrow pathways rather than spread through the general mass of the backfill. The pathways would be along pipe-soil and wall-soil interfaces. The only areas with any significant potential for damage to soils under a critical structure was in fill under the wings of the Auxiliary Buildings at each unit. A structural reanalysis of this building was performed assuming total loss of support under a conservatively large area and the results showed the original design would be adequate. Since this conclusion is based primarily on engineering judgement rather than actual measurement of the soil properties under the structures, it is recommended that the settlement measurements be continued throughout the life of the project with special measurements taken after any significant event such as earthquakes or structural additions.

Subject: Palo Verde Project - (50-528)
Listing of Documents Furnished to COE for Their Review
(Task No. 4, Consulting Contract NRR 82-102)

Document No.	Document No.	Document Title
1	Oct. 7, 1981	Telephone Record Sheet - G. Duckworth's notification of Bob Dodds on DER 81-35 Void in Backfill
2	Nov. 5, 1981	"Interim Rpt. - DER 81-35", 50.55(e) Potentially Reportable Deficiency Relating to a leak in Temporary Fire Protection Pipe Disturbing Backfill in Proximity of Auxiliary and Control Building (Ltr. from E. Van Brunt, Jr to Reg. V)
3	Dec. 31, 1981	Ltr w/encl. from Reg. V (B. Faulkenberry) to Ariz. Public Service Co., "NRC Inspection of Palo Verde"
4	Feb. 11, 1982	Ltr. from E. Van Brunt, Jr. to Reg. V. (Faulkenberry) on DER 81-35 status
5	May 13, 1984	Ltr w/encl. (Def. Eval. Rept.) of DER 81-35 from W.H. Wilson (Bechtel) to E. Van Brunt (ANPP)
6	May 19, 1982	"Attachment A - Geotechnical Investigations to Assess Condition of Backfill After Pipe Leaks at the Palo Verde Nuclear Generating Station"
7	May, 1982	"Engineering Evaluation of Conditions of Backfill After Pipe Leaks at the Palo Verde NGS -DEFICIENCY EVALUATION REPORT NO. 81-35
8	1982	"Grouting for Disposition of Temporary Piping at the Palo Verde Nuclear Generating Station
9	May 20, 1982	Ltr. w/encl., DER 81-35 from E. Van Brunt, Jr. to Reg. V (Bishop)
10	Oct. 13, 1982	Ltr w/encl. from D. Sternberg (Reg. V) to E. Van Brunt, Jr. on "NRC Inspection of Palo Verde"
11	April 6, 1983	Ltr. w/encl from E. Van Brunt, Jr. to Reg. V (Sternberg) on DER 81-35 w/transmittal of Rev. 1
12	Dec 3, 1983	Newspaper Article from MESA Tribune on "Palo Verde Safety Problem Alleged"

Incl 1

Document No.	Document No.	Document Title
13	Feb. 9, 1984	Memorandum w/Attachment from G. Lear to G. Kighton, "Request for Additional Information, Reevaluation of Degraded Backfill Under Seismic Category 1 Structures"
14	June 18, 1984	Responses to NRC Request for Additional Geotechnical Information
15	Sep 19, 1984	Summary of Meeting to Discuss Effects of Water leaks on foundation stability
16	Aug 23, 1984	Listing of Information Requested by NRC of APS on August 23, 1984 Following Site Visit-Palo Verde Project (These documents were reviewed by COE during site Visit on Aug 22, 1984)
17	Sep 29, 1982	APS Final Report - DER 81-55 Deficiency evaluation PVNGS Unit 3
18	April 1983	FSAR sections 2.5, 2A, 2B, 2E, and 2F updated through Amendment 13.

UNITED STATES
NUCLEAR REGULATORY COMMISSION
WASHINGTON, D. C. 20555

OCT 5 1984

Docket Nos.: 50-528, 50-529
and 50-530

APPLICANT: Arizona Public Service Company

FACILITY Palo Verde, Units 1, 2 and 3

SUBJECT: SUMMARY OF MEETING TO DISCUSS EFFECTS OF WATER LEAKS ON FOUNDATION STABILITY

A meeting was held on August 22, 1984, at the Palo Verde site with representatives of the applicant. The purpose of the meeting was to discuss information relating to the water leakage during 1981 and 1982 from temporary lines under the auxiliary buildings for Palo Verde. Enclosure 1 is the agenda for the meeting and the attendees are listed on Enclosure 2. An exit meeting was held on the morning of August 23, 1984 at the applicant's office in Phoenix, Arizona. The meeting is summarized as follows.

Summary

A tour of the facilities was made on the morning of August 22, 1984 to look at the areas in each of the three units where water leakage was known to occur from underground temporary construction lines before they were grouted. The purpose of the tour was to permit representatives of the Corps of Engineers (COE), who are assisting the NRC staff in the evaluation of this issue, to obtain a better understanding of what occurred.

In the afternoon, the NRC staff and COE held discussions with representatives of the applicant and Bechtel covering the agenda items in Enclosure 1. A number of documents relating to the foundation evaluation had been made available to COE prior to the site visit. These include the following:

1. Geotechnical investigation report by Ertec Western, dated March 1982
2. Engineering evaluation report by Bechtel, dated May 1982
3. Grouting report by Bechtel, dated 1982
4. Responses to NRC staff questions, APS letter dated June 18, 1984, with attachment
5. Palo Verde FSAR Sections 2.5, 2A, 2B, 2E and 2F

Incl. 2

The purpose of the afternoon discussions was to obtain a better understanding of the erosion problem and covered the following topics:

1. The construction sequence of placing the temporary lines and completing the structures.
2. Remedial work completed after discovery of the eroded soil.
3. Results and evaluation of cone penetrometer study.
4. Basis for conclusions on foundation stability of Radwaste and Control Buildings.
5. Settlement records and future settlement plans.
6. Problems with drilling and grouting through completed structures foundations.
7. Potential effects of dynamic loading from machine/equipment start-up on future foundation stability.

With regard to the specific topics identified as item 5 of the site visit agenda, the following information was provided to the NRC staff and COE. The applicant stated that no seepage from the broken lines was noted on the ground surface at any of the three plant units. The grout take at Unit 3 that was in excess of estimated volumes of eroded soil likely filled openings that had not been detected.

At the exit meeting the following morning, the staff informed the applicant that COE felt it had sufficient information to complete its assessment of the matter. Several other documents, which provide background information relating to the water leakage, would be requested of the applicant. (The documents were requested by letter dated August 30, 1984). The staff also stated that the COE evaluation would be completed prior to fuel load of Unit 1.

E A Licitra

E. A. Licitra, Project Manager
Licensing Branch No. 3
Division of Licensing

Enclosures:
1. Site Visit Agenda
2. Meeting Attendees

cc: See next page

ZU INFOMASTER

C E TULSA

021401I21S 1531EST

01 TULSA OKLAHOMA USACE
TWX 310 781 5114-DOD CRSE-ABN

P 031921Z AUG 84
FROM DISTENGR TULSA OK//SWTED-G//
TO NRC WASH DC//SGEB-NRR//(J. KANE)
INFO CDRUSACE WASH DC//DAEN-CWE-S//
CDRUSAEDSW//SWDED-G//
ACCT NO DA BHCSVD
UNCLAS
SUBJ PALO VERDE NUCLEAR POWER PLANT, PHOENIX ARIZONA, GEOTECHNICAL REVIEW OF REPORTS ON CONDITION OF BACKFILL AFTER PIPE LEAKS

1. THE FOLLOWING AGENDA IS SUGGESTED FOR THE PROPOSED SITE VISIT TENTATIVELY SCHEDULED FOR AUGUST 22-23, 1984:

DAY ONE - VISIT SITE

A. WOULD LIKE TO SEE ALL KNOWN EXIT POINTS FOR EACH LEAK.

B. IF POSSIBLE WOULD LIKE TO SEE CONDITION OF FILL IN AREAS WHERE IT WAS SATURATED BY LEAKAGE AND IN UNDISTURBED AREAS.

DAY TWO - MEETING WITH PEOPLE FAMILIAR WITH DESIGN, CONSTRUCTION, LEAKAGE PROBLEMS, FOUNDATION CONDITIONS, AND GROUTING.

2. THE FOLLOWING QUESTIONS AND COMMENTS ARE BASED ON THE FIRST LOOK AT THE MATERIAL FURNISHED FOR REVIEW:

A. IN RESPONSE TO NRC QUESTION #3, STATEMENT IS MADE THAT ONLY ONE EXIT POINT FOR LEAKAGE OCCURRED (INTO SEISMIC GAP). WHERE WAS SEEPAGE NOTED ON THE SURFACE AS REPORTED IN THE NEWSPAPER?

B. DURING THE GROUTING PROGRAM IT IS NOTED THAT THE LARGEST EXCESS GROUT TAKE OCCURRED AT UNIT #3. NO ERODED FILL MATERIALS WERE OBSERVED AT THE REPORTED EXIT POINT FOR THIS LEAK. UNDETECTED PIPING MAY HAVE OCCURRED. WHAT ARE POTENTIAL CONSEQUENCES OF UNDETECTED EROSION OF FILL IN THIS AND OTHER AREAS?

C. NO DISCUSSION OF SETTLEMENT OF EQUIPMENT HATCH OR POTENTIAL LOSS OF SUPPORT UNDER THIS STRUCTURE OR THE ADJACENT WING OF THE AUXILIARY BUILDING AND OTHER NEARBY STRUCTURES WAS PROVIDED. EXPLAIN WHY THIS WAS NOT NECESSARY CONSIDERING THE LEAKAGE THAT EXITED INTO THE SETTLEMENT HATCH AND THE POSSIBILITIES OF UNDETECTED EROSION.

3. IF AVAILABLE, PLEASE FURNISH THE FOLLOWING ADDITIONAL REPORTS.

A. DIRECT STATEMENTS OR REPORTS FROM THE ENGINEER THAT REPORTED THE DEFICIENCY.

B. AS BUILT GEOLOGIC AND SOILS MAPS.

C. FOUNDATION REPORTS DESCRIBING GEOLOGY, SOILS, AND FOUNDATION DESIGN.

BT

Enclosure 2

Meeting Attendees
Geotechnical Meeting
August 22, 1984

APS

Kent Jones
Art Gehr
Joe Truillo
Bill Hurst
R. J. Kimmel
Bill Quinn

Bechtel

Ken Schechter
Mike Wolff
Dennis Keith
Steve Shepherd

Earth technology

Ken Euge
Steve Haire

Corps of Engineers

John Wagner
Robert Ramsey

NRC

Joseph Kane
Manny Licitra

APPENDIX H

RSB REVIEW OF CESSAR SUBMITTALS TO SUPPORT PALO VERDE LICENSE

UNITED STATES
NUCLEAR REGULATORY COMMISSION
WASHINGTON, D. C. 20555

DEC 21 1984

MEMORANDUM FOR: Thomas M. Novak, Assistant Director for Licensing, DL

FROM: R. Wayne Houston, Assistant Director for Reactor Safety, DSI

SUBJECT: RSB REVIEW OF CESSAR SUBMITTALS TO SUPPORT PALO VERDE LICENSE

Reference:
(1) A. Scherer to D. Eisenhut, October 22, 1984 (LD-84-061)
(2) A. Scherer to D. Eisenhut, December 5, 1984 (LD-84-069)
(3) A. Scherer to D. Eisenhut, December 5, 1984 (LD-84-070)
(4) A. Scherer to D. Eisenhut, December 5, 1984 (LD-84-071)

Reference (1) through (4) submitted the CE proposed changes to CESSAR system 80 FSAR. The Reactor Systems Branch has reviewed the portions of the CE submittals within the RSB review scope and concluded that they are acceptable to support licensing Palo Verde Unit 1. However, the staff will require the applicant to submit confirmatory analyses to support the above assessment. This is discussed in Section 15.0 of Palo Verde SSER No. 7. The staff SSER for those issues will be transmitted to F. Miraglia in the future in CESSAR 80 docket. The bases of the staff acceptance of those CESSAR changes relative to Palo Verde license are as follows:

1. Reference (1):

   a) The change in CESSAR FSAR Table 5.1.1-1 is made to correct a previous typographical error.

   b) The change in CESSAR FSAR Section 5.2.2.4.4 is made to reflect the actual SIS relief valve design and specifications. The staff concluded that this change does not alter ECCS performance.

   c) The change in CESSAR FSAR Figure 5.4.10-2 is made to reflect the actual installed pressurizer level program. The staff concluded that this new figure is bounded by the initial conditions specified in Table 15.0.5 of the CESSAR FSAR and therefore, it is acceptable.

2. Reference (2):

   The changes to Chapter 15 of CESSAR FSAR is made to provide clarification and consistency of the response times actually used in CESSAR safety analyses. The staff has concluded that these changes do not affect the results and conclusions of the safety analyses, which remain valid. The revised Chapter 15 sequence of event tables are now consistent with Technical Specifications and CESSAR interface requirements. The changes made in pages 5.1-12 and 5.4-15 of

CESSAR FSAR with respect to the main steam and main feedwater isolation valve closure times are consistent with CESSAR Chapter 15 analyses and therefore, the above stated changes are acceptable.

3. Reference (3):
The changes to Section 5.2.2.10 and Figure 5.2-2 are made to reflect a lower maximum ΔT of 100°F across a steam generator. This ΔT value is used in the analysis for developing Figure 5.2-2. Also clarification is added to reflect the shutdown cooling system relief valves used in the first CE system 80 plant. Figure 5.2-1 is modified to reflect the difference in height between the pressurizer and the shutdown cooling system. The staff has reviewed the above changes and concludes that they do not affect the low temperature overpressure protection and, therefore, they are acceptable.

The changes to Table 6.3.3.3-1 and 6.3.3.3-2 are made to reflect the reduced safety injection pump shutoff head and flow. The revised Figure 6.3.3.2-5L indicated that there is only a slight change to the safety injection flow into the intact discharge leg for the most limiting large break LOCA (1.0 ft^2 double ended guillotine break). The applicant's assessment is that the results of a most limiting LBLOCA with slightly reduced safety injection flow will not alter the results reported in the existing CESSAR FSAR with a maximum clad temperature of 2169°F. The staff has reviewed the above information and concludes that there is reasonable assurance that the results of a LBLOCA meet the requirements of 10 CFR 50.46 and Part 50 Appendix K and, therefore, it is acceptable for supporting Palo Verde Unit 1 license. However, the staff will require the applicant to submit confirmatory analyses to support the above assessment. This is further discussed in Section 15.0 of Palo Verde SSER No. 7.

4. Reference (4):
The changes in Section 6.3.3 of CESSAR FSAR are made to provide the results of a reanalysis of a postulated small break LOCA (0.05 ft^2 break) with reduced auxiliary feedwater and safety injection flow. The results of this reanalysis show that the peak cladding temperature increased from 1557°F to 1630°F, still below the limit allowed by 10 CFR 50.46. Both the core wide and local oxidation limits also fall below the 10 CFR 50.46 limits. The staff concludes that the results of this reanalysis provide reasonable assurance that the CE analysis is in compliance with 10 CFR 50.46 to support the Palo Verde Unit 1 license. However, the staff will require the applicant to submit confirmatory analyses to support the above assessment. This is further discussed in Section 15.0 of Palo Verde SSER No. 7.

R. Wayne Houston, Assistant Director
for Reactor Safety, DSI

APPENDIX I

TECHNICAL EVALUATION REPORT
DETAILED CONTROL ROOM DESIGN REVIEW STATUS
ARIZONA PUBLIC SERVICE COMPANY
PALO VERDE NUCLEAR GENERATING STATION

Gary L. Johnson
L. Rolf Peterson

Lawrence Livermore National Laboratory

December 6, 1984

TECHNICAL EVALUATION REPORT
DETAILED CONTROL ROOM DESIGN REVIEW STATUS
ARIZONA PUBLIC SERVICE COMPANY
PALO VERDE NUCLEAR GENERATING STATION

INTRODUCTION

An audit of the Arizona Public Service Company (APS) Detailed Control Room Design Review (DCRDR) program for the Palo Verde Nuclear Generating Station, Unit 1 (PVNGS1) was conducted on October 10 and 11, 1984. The audit team included representatives of the Nuclear Regulatory Commission and consultants from Lawrence Livermore National Laboratory.

The NRC audit established the status of the Palo Verde DCRDR and supplemented previous APS submittals to allow evaluation of the applicability of Preliminary Design Assessment (PDA) activities in fulfillment of NUREG-0737, Supplement 1, DCRDR requirements.

Additionally, the open items in the PVNGS1 PDA, detailed in Ref. 1, were reviewed. These open items are:

- Confirmation of correction of human engineering discrepancies (HEDs).
- Clarification of the status of the environmental survey, including the lighting survey.
- Clarification of the licensee review of the remote shutdown panel.

DISCUSSION

APPLICABILITY OF PDA ACTIVITIES TO FULFILLMENT OF DETAILED CONTROL ROOM DESIGN REVIEW REQUIREMENTS

The audit team evaluated the PVNGS Control Room Preliminary Design Review with respect to the DCRDR requirements of NUREG-0737, Supplement 1, as discussed below.

This evaluation was based upon material provided in Refs. 2 and 5, together with the control room inspection, discussions with the APS staff, and walk-through of the Station Blackout Emergency Operating Procedure.

DCRDR REVIEW TEAM:

Requirement

Supplement 1 to NUREG-0737 requires the establishment of a qualified multidisciplinary review team to conduct a DCRDR. Guidelines for review team selection are found in NUREG-0700 and Draft NUREG-0801.

Assessment

The Palo Verde PDA program included participation of APS Nuclear Engineering, Licensing and Operations, the A/E Instrument and Control Group, and a Human Factors Consultant. The audit team concluded the APS effort satisfies this requirement.

FUNCTION AND TASK ANALYSIS:

Requirement

Supplement 1 to NUREG-0737 requires the applicant to perform systems function and task analyses to identify control room operator tasks and operator information and control requirements during emergency operations. Supplement 1 to NUREG-0737 recommends the use of the function and task analyses that were used as the basis for developing both emergency operating procedure technical guidelines and plant-specific emergency operating procedures, to define these requirements.

Assessment

The APS "System Factors Review" identified the basic functions, requirements, and operating modes of each important plant system and evaluated the ability of controls and displays to support these functions and requirements. This evaluation was based upon the system factors review team perception of each system's operation during various plant modes, and did not explicitly work through all important event sequences, make use of plant operating procedures, or specifically identify functional requirements upon individual instruments and controls.

While the approach partially satisfies the Function and Task Analysis requirement, the audit team could not conclude that operator tasks and corresponding operator information and control requirements have been comprehensively identified for all emergency event sequences, in a manner consistent with plant-specific operating procedures. The PVNGS DCRDR submittal should further discuss how the Function and Task Analysis requirement of NUREG-0737, Supplement 1 has been addressed.

COMPARISON OF CONTROL AND DISPLAY REQUIREMENTS WITH CONTROL ROOM INVENTORY:

Requirement

Supplement 1 to NUREG-0737 requires the applicant to compare the operator display and control requirements determined from the task analyses with the control room inventory to determine missing controls and displays. Guidance in NUREG-0700 also calls for a review of the human factors suitability of instruments and controls used to satisfy operator information and control requirements.

Assessment

As discussed in Ref. 5, the PVNGS system factors review team made subjective judgments about the adequacy of instruments and controls available on the PVNGS control boards, based upon a standard set of questions regarding system functions, requirements, and operating modes.

The audit team concluded that the level of detail reflected in the questions combined with the absence of specifically identified functional requirements does not ensure all control and display requirements have been satisfied.

A systematic and rigorous comparison of requirements vs. capabilities is required as part of the DCRDR to show that controls and displays with adequate range, accuracy, and qualification have been provided. The APS DCRDR submittal should demonstrate that such a comparison has occurred.

CONTROL ROOM SURVEY:

Requirement

Supplement 1 to NUREG-0737 requires that a control room survey be conducted to identify deviations from accepted human factors principles. NUREG-0700 provides guidelines and criteria for conducting a control room survey. The objective of the control room survey is to identify for assessment and possible correction, the characteristics of displays, controls, equipment, panel layout, annunciators and alarms, control room layout, and control room ambient conditions that do not conform to good human engineering practices.

Assessment

The audit team concluded that the PVNGS PDA fulfills this requirement provided the following items are completed acceptably:

- Control room environmental and lighting survey
- Resolution of open HEDs discussed under "Confirmation of Correction of HEDs from the PDA"
- Evaluation of new control and display functional relationships or interactions identified by the functional and task analysis.
- Evaluation of operator provided enhancements and incorporation of such enhancements into the control room design as appropriate.

ASSESSMENT OF HEDs:

Requirement

Supplement 1 to NUREG-0737 requires that HEDs be assessed to determine which HEDs are significant and should be corrected. NUREG-0700 contains guidelines for the assessment process.

Assessment

The audit team concluded the APS HED assessment process, to date, complies with this requirement. The performance of APS in the evaluation of new HEDs identified as part of the DCRDR will be evaluated as part of the DCRDR review.

SELECTION OF DESIGN IMPROVEMENTS:

Requirement

Supplement 1 to NUREG-0737 requires selection of control room design improvements that will correct significant HEDs. It also states that improvements that can be accomplished with an enhancement program should be done promptly.

Assessment

The audit team concluded that the APS PDA selection process generally complies with this requirement. However, as noted in the discussion of the control room inspections, the audit team identified several control room enhancements that should be done sooner than currently scheduled by APS. Implementation of design improvements on a schedule acceptable to the NRC must be resolved.

VERIFICATION OF CONTROL ROOM DESIGN IMPROVEMENTS:

Requirement

Supplement 1 to NUREG-0737 requires verification that selected control room design improvements will provide the necessary corrections of HEDs, will not introduce new HEDs into the control room, and will not result in increased risk, unreviewed safety questions, or temporary reduction in safety.

Assessment

As discussed previously, a number of cases were noted in which HEDs were incompletely resolved or new HEDs were created as part of modifications resulting from the PDA. Additionally, APS is not consistently making use of the plant simulator to assist in verification of HED resolutions. APS should improve the verification process for pending and future human

factors modifications, and discuss this process in the DCRDR Summary Report.

COORDINATION OF CONTROL ROOM IMPROVEMENTS WITH OTHER PROGRAMS:

Requirement

Supplement 1 to NUREG-0737 requires that control room improvements be coordinated with changes from other programs; e.g., safety parameter display system (SPDS), operator training, Regulatory Guide 1.97 (R.G. 1.97), and emergency operating procedures (EOPs).

Assessment

The audit team noted that the control room improvements have not been thoroughly coordinated with EOP development and training in that the function and task analysis was not based upon the EOPs or their supporting task analysis; some nomenclature differences exist between the EOPs and control boards; and simulator modifications have not kept pace with control room human factors modifications. The first problem is expected to be resolved by completion of the PVNGS task and function analysis. Resolution of the remaining items should be discussed by the DCRDR submittal.

CONFIRMATION OF CORRECTION OF HEDs FROM THE PDA

The audit team reviewed the design improvements proposed or implemented by APS to correct HEDs identified by the PVNGS PDA. The HED corrections discussed by APS in Attachments A and B of Ref. 2 were verified by inspection of the PVNGS1 control room. Generally, HED corrections were complete and acceptable as described by the reference, however, the following deficiencies were noted. HED numbers refer to the listing in the APS submittals of 6/30/83 and 3/14/84.

HED A-1.2

Glare is a problem for most displays on all of the panels. It is worst on the "C" surfaces, depending on viewing angle.

Audit Team Observation

Glare remains a problem in the PVNGS1 control room. There was evidence that APS has tried a number of approaches to address the glare problem. While these attempts resulted in some improvement, a number of indicators, particularly the Foxboro displays on the B and C surfaces of the control panels, remain difficult to read due to glare. APS has stated that glare will be addressed as part of the control room environmental and lighting survey. APS commitment to acceptably resolve the problem of glare on displays is needed.

HED A-5.9

A large number of Foxboro meters and recorders have a 0-100 (i.e., percent) scale instead of an engineering unit scale.

Audit Team Observation

In general, Foxboro meter and recorder scales have been changed to indicate in engineering units. An exception noted is the wide and narrow range Steam Generator Water Level indicators. Both sets of indicators use 0-100% of range scales. The scale units do not directly indicate percent fill of the steam generators. APS stated these scales are acceptable because the two ranges are used during different stages of operation and are calibrated for different system temperature conditions. Therefore, providing consistent scaling of the wide and narrow range instruments would be misleading.

The audit confirmed that, for some plant transients, wide and narrow range indications must be used together. Therefore, the audit team could not conclude that the APS justification is acceptable. Additionally, temporary operator aids for interpretation of the Steam Generator Water Level instruments were posted nearby, indicating the operators have some difficulty reading and interpreting information displayed on these instruments. APS should address this deficiency as part of the DCRDR.

HED A-5.16

Green light intensity is used to distinguish faulted from normal status on the Electric Bus Panel on Panel B01. However, the two intensities are not discernible unless one witnesses the change in intensity as it happens.

Audit Team Observation

Modifications to resolve this HED have not yet been implemented. APS stated that modifications to make the two intensities readily distinguishable have been designed and will be implemented during the DCRDR. The proposed action is expected to acceptably resolve this HED.

HED A-3.1

The nature of the annunciator auditory signals could, in some cases, cause irritation or a startled reaction.

Audit Team Observation

It was noted that the ESF alarms are loud and irritating to the point that operators commented about it to the audit team. Additionally, the plant annunciator auditory alarm does not give good location cues and the audible reset indication is not readily distinguished from the preceding alarm signal. These HEDs should be addressed by the APS noise survey. APS commitment to suitable resolution of auditory alarm HEDs is needed.

HED A-5.14

Foxboro displays have a parallax problem, especially those located on the lower part of the benchboard.

Audit Team Observation

In response to this and other HEDs, APS installed Foxboro 250 series indicators and controllers instead of the Foxboro 270 series that was in use at the time of the PDA. This change resolved some of the parallax problems. However, the audit team noted that the most and least significant digits on vertical meters with three and four digit numerical labels on the meter scales, were not visible from a wide range of viewing angles. APS should address the readability of vertical meters as part of the DCRDR.

HED A-5.9

Zone markings have not been used on meters to show the operational implications of various readings (e.g., "Danger Range").

Audit Team Observation

APS planned to delay zone markings until the first refueling outage. The audit team did not consider this an acceptable schedule given the readily implemented nature of this enhancement and the fact the operators have, in many cases, applied their own zone markings, trip points, and normal operating values with grease pencil or felt pen. A commitment to apply zone and setpoint markings, prior to exceeding five percent power, is needed from APS. Use of temporary markings may be appropriate until final values of zone and setpoint parameters are determined during the first operating cycle.

HED B-5.14

There is no lamp test capability on CMC switches.

Audit Team Observation

APS addressed this HED via a lamp surveillance procedure. Although the audit team concluded that the surveillance procedure represents a step forward, the problem would be better addressed through the provision of lamp test capabilities. Additionally, the APS surveillance procedure made no special provisions to identify and verify operability of low duty cycle lamps, which would have a long surveillance interval. APS commitment to an acceptable resolution of lamp test capability or lamp surveillance procedures is needed.

In addition to the above unresolved HEDs, the audit team also noted some of the tag-out tags used in the control room are quite large and obscure control board indications, controls and labels. APS should address this issue as part of the DCRDR.

Status of Environmental and Lighting Survey

APS stated that the Environmental and Lighting Survey was in progress. The results of this survey will be presented to NRC by November 1, 1984. APS plans to complete resolution of all environmental HEDs prior to start up from the first refueling outage.

Review of Remote Shutdown Panels

The APS approach to the Remote Shutdown Panel (RSP) human factors review was discussed and documentation of their RSP review was audited. APS stated that the RSP review followed the same basic approach as the Control Room PDA. The APS review included walk-through of the Control Room Fire Remote Shutdown Procedure. Cooldown from the Hot Functional Test was conducted at the RSP to further identify HEDs.

The complete list of HEDs observed was presented to the audit team during the audit. Proposed resolutions were provided by Ref. 4. The audit team inspected the RSPs and observed no additional HEDs to those identified by the APS review.

One APS identified HED resulted from the location of the top row of meters too high on the panel for easy readability. APS proposes the provision of a portable step for use in viewing these meters. The audit team observed that these meters can be read without the step, if there is no need for accurate readings of the scales, and if operating values are not routinely expected in the upper range of the scales. Given the limited space around the RSPs, the audit team observed that use of a portable step may create a more significant HED than it corrects. APS should reevaluate their proposed corrective action for this HED.

In Ref. 4, APS indicated that functional demarcation of the RSPs would be completed before startup from the first refueling. Given the relatively simple nature of this enhancement and the fact that some functionally related

items are not located in close proximity, the audit team determined that at least a temporary functional or system demarcation of the RSPs should be implemented before operation at greater than five percent power.

CONCLUSIONS

As a result of this DCRDR audit, the following action items were identified for APS and discussed at the exit meeting on October 11, 1984.

Prior to Fuel Load

- Complete and submit the results of the Control Room Environmental Survey, including evaluation of the following:

  - ESF panel audible alarm
  - Annunciator location cues
  - Annunciator reset audible indication
  - Control room lighting and glare on instruments and displays.

  This submittal shall provide an acceptable schedule for resolution of HEDs identified by the Environmental Survey.

- Submit documentation of the Remote Shutdown Panel Survey.

- Submit formal confirmation of implementation or justification for delay of implementation for all PDA HED resolution actions committed to be complete prior to fuel load.

Prior to Exceeding Five Percent Power

- Provide zone marking, as appropriate, on Control Room and Remote Shutdown Panel displays.

- Provide functional demarcation or grouping of indicators and controls on the Remote Shutdown Panel.

These enhancements may be of a temporary nature pending installation of permanent banding and demarcation resulting from the DCRDR and initial operating experience.

Detailed Control Room Design Review Summary Report

Submit a DCRDR completion schedule and a final DCRDR Summary Report. The DCRDR Summary Report should address the DCRDR requirements of NUREG-0737, Supplement 1 and include the following features.

- A detailed description of the functional and task analysis methodology and results including:

1. Sample checklists
2. Sample data sheets
3. Documentation of instrument and control needs addressing -
   - range
   - accuracy
   - availability under accident conditions.

- Discussion of the final resolution and corrective action implementation schedule for the following items:
  - glare on indicators
  - Foxboro 250 indicator readability
  - faulted/normal trip indication on breaker controls
  - lamp testing
  - scale and calibration differences between wide and narrow range Steam Generator Water Level indication
  - ability to recognize audible alarm locations
  - control room tag-out tags
  - consistency of control board and operating procedure nomenclature.

- Statement of provisions to ensure consistency between the plant control room and simulator.

- Review of aids and enhancements implemented by the operators and permanent installation of desirable enhancements into the control room design.

REFERENCES

1. Memo, W. T. Russell (NRC, DHFS) to T. M. Novak (NRC, DOL), "Preliminary Design Assessment (PDA) SER Input for Palo Verde Nuclear Generating Station, Unit 1," dated August 17, 1984.

2. Letter, E. E. Van Brunt, Jr. (APS) to G. Knighton (NRC, DOL), ANPP-29066-JWR/GAS, dated March 14, 1984.

3. Report, J. W. Savage and D. A. Lappa (LLNL), "Human Factors Engineering, Control Room Design Review/Audit Report, Palo Verde Nuclear Generating Station," UCID-19106, dated October 9, 1981.

4. Letter, E. E. Van Brunt, Jr. (APS) to G. Knighton (NRC, DOL), ANPP-29422-JWR/GAS, dated May 4, 1984.

5. Letter, E. E. Van Brunt, Jr. (APS) to G. Knighton (NRC, DOL), ANPP-29252-WFO/KEJ, dated April 9, 1984.

APPENDIX J

SAFETY PARAMETER DISPLAY SYSTEM
STATUS REPORT FOR
PALO VERDE 1, 2, and 3

I. POSITION

All holders of operating licenses issued by the Nuclear Regulatory Commission (licensees) and applicants for an operating license (OL) must provide a Safety Parameter Display System (SPDS) in the control room of their plant. The NRC has established various requirements and provided guidance for the design of an SPDS in Supplement 1 to NUREG-0737.

The purpose of the SPDS is to provide a concise display of critical plant variables to control room operators to aid them in rapidly and reliably determining the safety status of the plant. NUREG-0737, Supplement 1 provides that licensees and applicants prepare a written safety analysis describing the basis on which the selected parameters are sufficient to assess the safety status of each identified function for a wide range of events, which include symptoms of severe accidents. Licensees and applicants shall also prepare an Implementation Plan for the SPDS which contains schedules for design, development, installation, and full operation of the SPDS as well as a design Verification and Validation (V&V) Plan. The Safety Analysis and the Implementation Plan are to be submitted to the NRC for staff review. The results from the staff's review are to be published in a Safety Evaluation Report (SER).

The staff review for licensees requesting a pre-implementation review and for applicants consists of a review of SPDS documentation (i.e., safety analysis report and implementation plan) and audit meetings/site visits.

After an initial review of the licensee/applicant's submittals, three separate audit meetings/site visits, as described below, may be arranged through the Division of Licensing Project Manager. As dictated by the comprehensiveness of the applicant/licensee's documentation and the schedule for design and implementation of the SPDS, the objectives of these audits may be met in fewer site visits.

Design Verification Audit. The purpose of this audit meeting is to obtain additional information required to resolve any outstanding questions about the V&V program, to confirm that the V&V program is being correctly implemented, and to audit the results of the V&V activities to date. At this meeting, the applicant/licensee should provide a thorough description of the SPDS design process. Emphasis should be placed on how the applicant/licensee is assuring that the implemented SPDS will provide appropriate parameters, be isolated from safety systems, provide reliable and valid data, and incorporate good human engineering practice.

Design Validation Audit: After review of all documentation, an audit may be conducted to review the as-built prototype or installed SPDS. The purpose of

this audit is to assure that the results of the applicant/licensee's testing demonstrate that the SPDS meets the functional requirements of the design and to assure that the SPDS exhibits good human engineering practice.

Installation Audit. As necessary, a final audit may be conducted at the site to ascertain that the SPDS has been installed in accordance with the applicant/licensee's plan and is functioning properly. A specific concern is that the data displayed reflect the sensor signal which measures the variable displayed. This audit will be coordinated with and may be conducted by the NRC Resident Inspector.

Unlike licensees, applicants will undergo prior to implementation, a full review to determine whether the applicable provisions of Supplement 1 to NUREG-0737 have been satisfied. To the extent possible, the staff will temper its review to conform to the schedule for licensing and SPDS implementation.

DISCUSSION

By letters dated March 27 and December 10, 1984, Arizona Public Service Company (APS) stated that the Palo Verde 1, 2, and 3 SPDS was installed and that the required Safety Analysis was complete. APS further states that during the process of performing the above tasks (Verification and Validation of SPDS), several observations were identified and documented. These observations were expected to be resolved by about December 1984 and the final summary report confirming the acceptability of the SPDS available at that time.

The staff has received no other information concerning the Palo Verde SPDS or the nature of the "observations" identified as needing resolution. The SPDS, therefore, remains an open item. Further, since no information has been provided regarding the unresolved "observations," the staff cannot confirm that the Palo Verde SPDS does not pose a serious safety question. The staff requires that the Safety Analysis Report and Implementation Plan (including the results of the Verification and Validation program) be submitted to the NRC by February 28, 1985, and that any identified problems be resolved and the SPDS be operational in the control room by June 1, 1985.

NRC FORM 335 (2-84) NRCM 1102, 3201, 3202

U.S. NUCLEAR REGULATORY COMMISSION

BIBLIOGRAPHIC DATA SHEET

SEE INSTRUCTIONS ON THE REVERSE

1. REPORT NUMBER (Assigned by TIDC, add Vol. No., if any)

NUREG-0857
Supplement No. 7

2. TITLE AND SUBTITLE

Safety Evaluation Report Related to the Operation of Palo Verde Nuclear Generating Station, Units 1, 2 and 3

3. LEAVE BLANK

4. DATE REPORT COMPLETED

MONTH	YEAR
December	1984

5. AUTHOR(S)

6. DATE REPORT ISSUED

MONTH	YEAR
December	1984

7. PERFORMING ORGANIZATION NAME AND MAILING ADDRESS (Include Zip Code)

Division of Licensing
Office of Nuclear Reactor Regulation
U.S. Nuclear Regulatory Commission
Washington, D. C. 20555

8. PROJECT/TASK/WORK UNIT NUMBER

9. FIN OR GRANT NUMBER

10. SPONSORING ORGANIZATION NAME AND MAILING ADDRESS (Include Zip Code)

Same as 7. above

11a. TYPE OF REPORT

b. PERIOD COVERED (Inclusive dates)

12. SUPPLEMENTARY NOTES

Docket Nos. STN 528, STN 50-529 and STN 50-530

13. ABSTRACT (200 words or less)

Supplement No. 7 to the Safety Evaluation Report for the application filed by Arizona Public Service Company, et al, for licenses to operate the Palo Verde Nuclear Generating Station, Units 1, 2 and 3 (Docket Nos. STN 50-528/529/530), located in Maricopa County, Arizona has been prepared by the Office of Nuclear Reactor Regulation of the U.S. Nuclear Regulatory Commission. The purpose of this supplement is to update the Safety Evaluation Report by providing an evaluation of (1) additional information submitted by the applicants since Supplement No. 6 was issued and (2) matters that the staff had under review when Supplement No. 6 was issued.

14. DOCUMENT ANALYSIS – a. KEYWORDS/DESCRIPTORS

b. IDENTIFIERS/OPEN-ENDED TERMS

15. AVAILABILITY STATEMENT

Unlimited

16. SECURITY CLASSIFICATION

(This page)
Unclassified

(This report)
Unclassified

17. NUMBER OF PAGES

18. PRICE

431-02-0483
Box 19

UNITED STATES
NUCLEAR REGULATORY COMMISSION
WASHINGTON, D.C. 20555

OFFICIAL BUSINESS
PENALTY FOR PRIVATE USE, $300

FIRST CLASS MAIL
POSTAGE & FEES PAID
USNRC
WASH. D.C.
PERMIT No. G-67

NUREG-0857, Supp. No. 7 SER RELATED TO THE OPERATION OF PALO VERDE NUCLEAR GENERATING STATION, UNITS 1, 2, AND 3 DECEMBER 1984