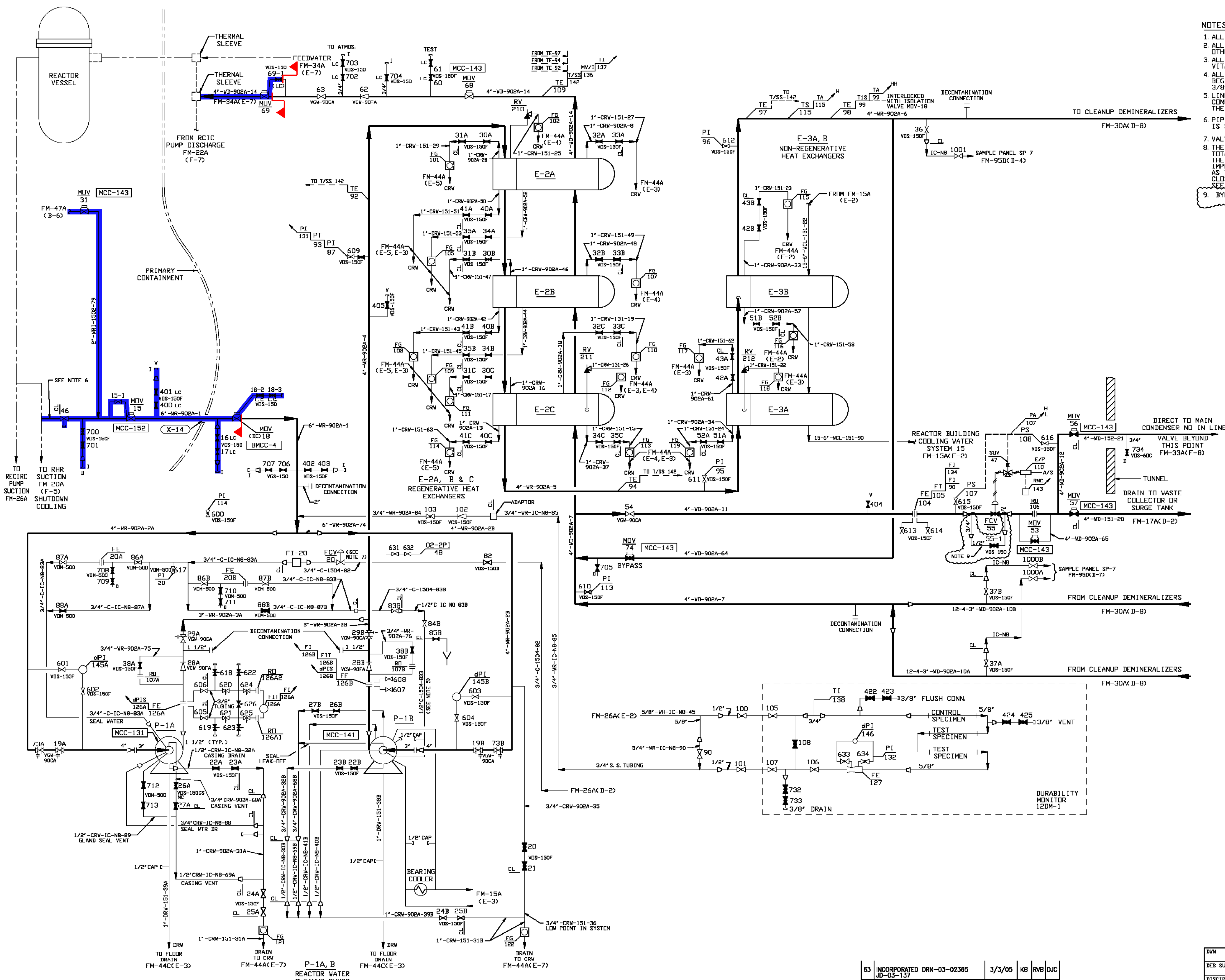

NOTES

1. ALL MANUAL VALVES PREFIXED RWC UNLESS OTHERWISE NOTED.
2. ALL COMPONENT MARK NUMBERS PREFIXED 12 UNLESS OTHERWISE NOTED.
3. ALL INSTRUMENTATION POWERED FROM STATION BATTERY VIA VITAL AC SYSTEM.
4. ALL ILRT CONNECTIONS (I) ARE PIPING CLASS IC-N8 BEGINNING AT THE DOWNSTREAM SIDE OF THE REDUCER TO THE 3/8" ILRT CONNECTION.
5. LINE 1/2"C-1504-83B CONTAINS UNIONS AND THREADED CONNECTIONS WHICH HAVE BEEN QUALIFIED AS PART OF THE ORIGINAL PLANT DESIGN.
6. PIPING BETWEEN G.E. RECIRC., 10RHR-88 AND 12RWC-46 IS SA420-WPL6 PER F1-84-053.
7. VALVE 12FCV-20 INTERNALS REMOVED PER M1-97-023.
8. THE REACTOR WATER CLEAN-UP (RWCU) SYSTEM NORMAL TOTAL FLOW RATE SHALL BE UP TO 100,000 LB/HR. HOWEVER, THE RWCU MAXIMUM FLOW MAY BE UP TO 120,000 LB/HR TO IMPROVE CONTROL OF THE REACTOR WATER CHEMISTRY AS LONG AS THE OPERATING LIMITS OF RWCU AND REACTOR BUILDING CLOSED LOOP COOLING (RBCLC) SYSTEMS CAN BE MAINTAINED. SEE JAF-SE-96-030, REV 0 DATED 5/21/96.
9. BYPASS PIPING IS SCH. 160.

REV	DESCRIPTION	DATE	BY	CHK'D	APP.
63	INCORPORATED DRN-03-02365 JD-03-137	3/3/05	KB	RVB	DJC

REVISIONS

REV NO	DATE	DESCRIPTION	DWN	CHK	RE	VFY	APP
62	2/11/04	AS-BUILT PER DCR-04-002, DRN-03-02553	PD	DMC	--	GT	JA
61	10/23/02	AS-BUILT PER MOD NO JD-99-142	KMB	JB	--	MM	JA
60	8/26/02	AS BUILT PER JE-00-159	PJD	JB	--	KM	JA
59	1/18/02	AS BUILT PER DCR-01-289	DMC	KB	--	KM	SKK

REVISIONS

QA CAT I & II/III

NUCLEAR SAFETY RELATED

DWN | CHK'D
DES SUPV
DISCIPLINE ENG
DISCIPLINE MGR.
PROJ APPROVAL
DATE

JAMES A. FITZPATRICK
NUCLEAR POWER PLANT

FLOW DIAGRAM
REACTOR WATER CLEANUP
SYSTEM 12

Entergy Nuclear Northeast

SCALE NONE
DWG NO FM-24A
REV 63
SHEET OF

REF: ISI-FM-24A
EC-FM-24A

SYSTEM INTENDED FUNCTION BOUNDARY

COMPONENTS SUBJECT TO AMR

REACTOR COOLANT SYSTEM PRESSURE BOUNDARY
AMM-33

NO.	DATE	DESCRIPTION	BY	ENG	CHK	APP
0	7-6-05	.	.	.	.	.

REVISIONS

LRA-FM-24A-0

CAD FILE LRA-FM-24A_63.DGN
RASTER FILE FM-24A_63.CAL