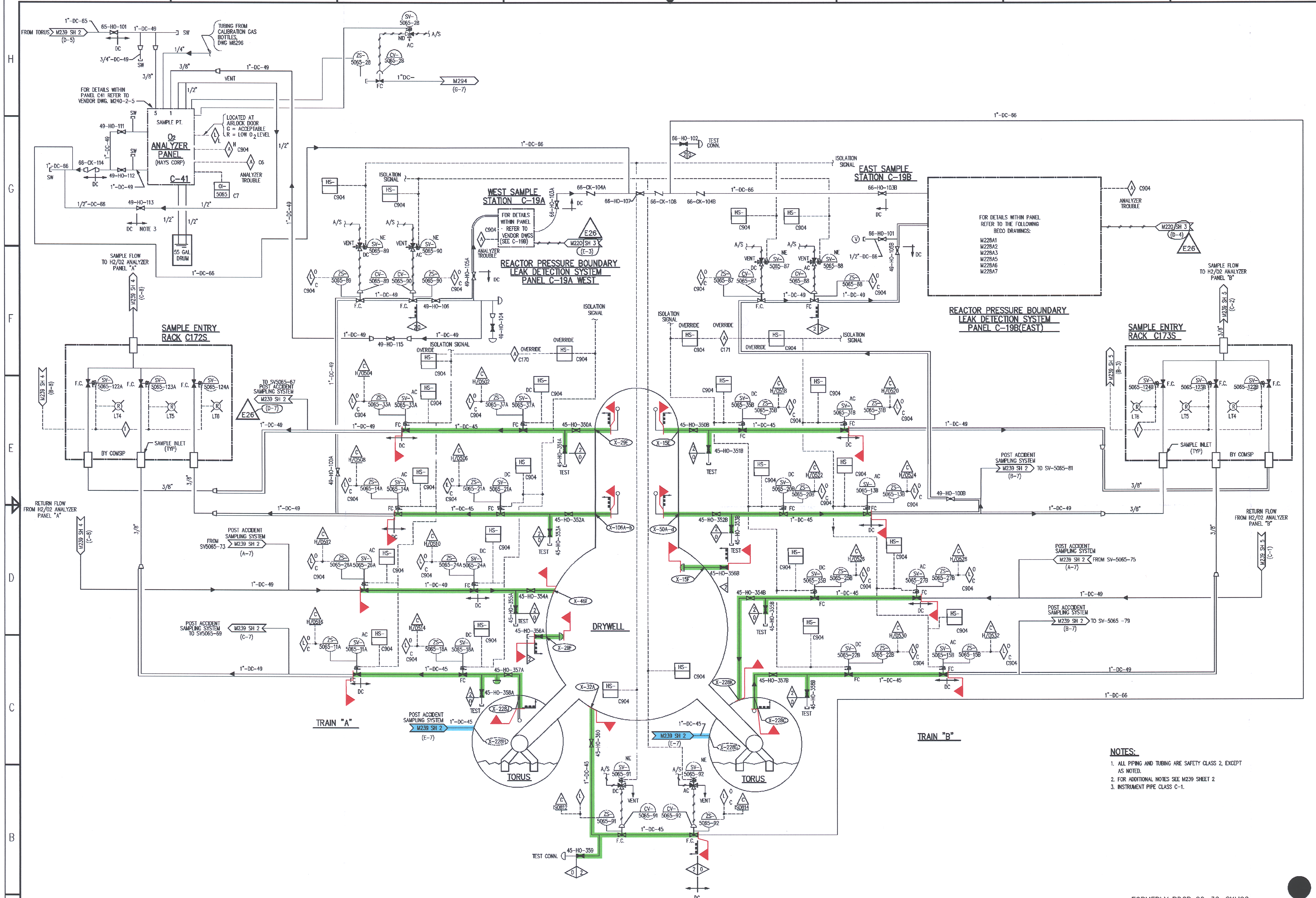

NOTES:

1. ALL PIPING AND TUBING ARE SAFETY CLASS 2, EXCEPT AS NOTED.
2. FOR ADDITIONAL NOTES SEE M239 SHEET 2
3. INSTRUMENT PIPE CLASS C-1.

SYSTEM INTENDED FUNCTION BOUNDARY

COMPONENTS SUBJECT TO AMR

- RESIDUAL HEAT REMOVAL SYSTEM AMRM-02
- PRIMARY CONTAINMENT ATMOSPHERE CONTROL SYSTEM AMRM-08

FORMERLY PDCR 80-30-SKM90

TITLE OF REFERENCE DRAWINGS	DWG NUMBER
PIPING SYSTEM ISOMETRIC DRAWINGS	M1004-SHS 300-331
EPIC SYSTEM ELEMENTARY DIAGRAM	M226A-2
COMSIP INC H2/O2 ANALYZER	099720
FUNCTIONAL DIA CONT ATOMOS CONTROL SYSTEM	SM434 SH 8,9,11
SCHEMATIC DIA REACTOR PRESS BOUND LEAK DET SYS C-19	E716
SCHEMATIC DIA POST ACCIDENT SAMPLING SYSTEM	E714 SH 1 & 2
SCHEMATIC DIA CONT ATMOS MONITORING SYSTEM	E713 SH 1 & 2

NO	DATE	REVISIONS	BY	ENG	CHK	APP
E26	2/03	REV FOR CR-PNP-2003-00365 PER DCN 14179	CTS	—	AEJ	WJB
E25	3/00	REV FOR PR 91.2204 PER DCN 07812	CTS	—	NJW	DLJ
E24	3/98	REV FOR FRN 97-04-73 PER DCN 02828	GAC	—	NJW	DLJ
E23	2/26/97	B.REVISED FOR FRN96-04-84 PER DCN00293	TEB	-	AJB	DLJ
		A.ELECTRONIC CONVERSION PER DCN97-00295		-	AJB	DLJ
E22	4/1/96	REVISED PER PR 96.0099.01	CTS	GEO		TFW
E21	2/14/96	REVISED PER PR 95.0611	TEB	MJD		TFW
E20	10/5/95	REVISED PER PR 95.9008.04	TEB	JRT		ETA
E19	5/18/95	REVISED PER PDC 92-63	TEB	RMB		ETA
E18	4/25/94	PER PHOENIX PROJECT CHANGE RECORD APPENDIX (B-71)	RMB / AJB	N/A	DAD / PDH	WJR / JPG

SCALE NONE | DESIGNED | DRAWN YANKEE ATOMIC | E

BOSTON EDISON

PILGRIM STATION NO. 600

BOSTON EDISON COMPANY

TITLE: P & ID H_2 & O_2 ANALYZER & REACTOR COOLANT PRESS BOUNDARY LEAK DETECTION SYSTEMS

Q / Non Q

DRAWING NO. M239 SH 1 — REV E26

41100-1941 FSAR DWG FIGURE 10.19-1 (REV 16)

NO.	DATE	DESCRIPTION	BY	ENG	CHK	APP
0	10-13-05	.	.	.	.	.

REVISIONS

LRA-M-239-SH-01-0

CAD FILE LRA-M-239-SH-01_E26.DGN

RASTER FILE M239SH1-CALS_E26.CAL

A-30