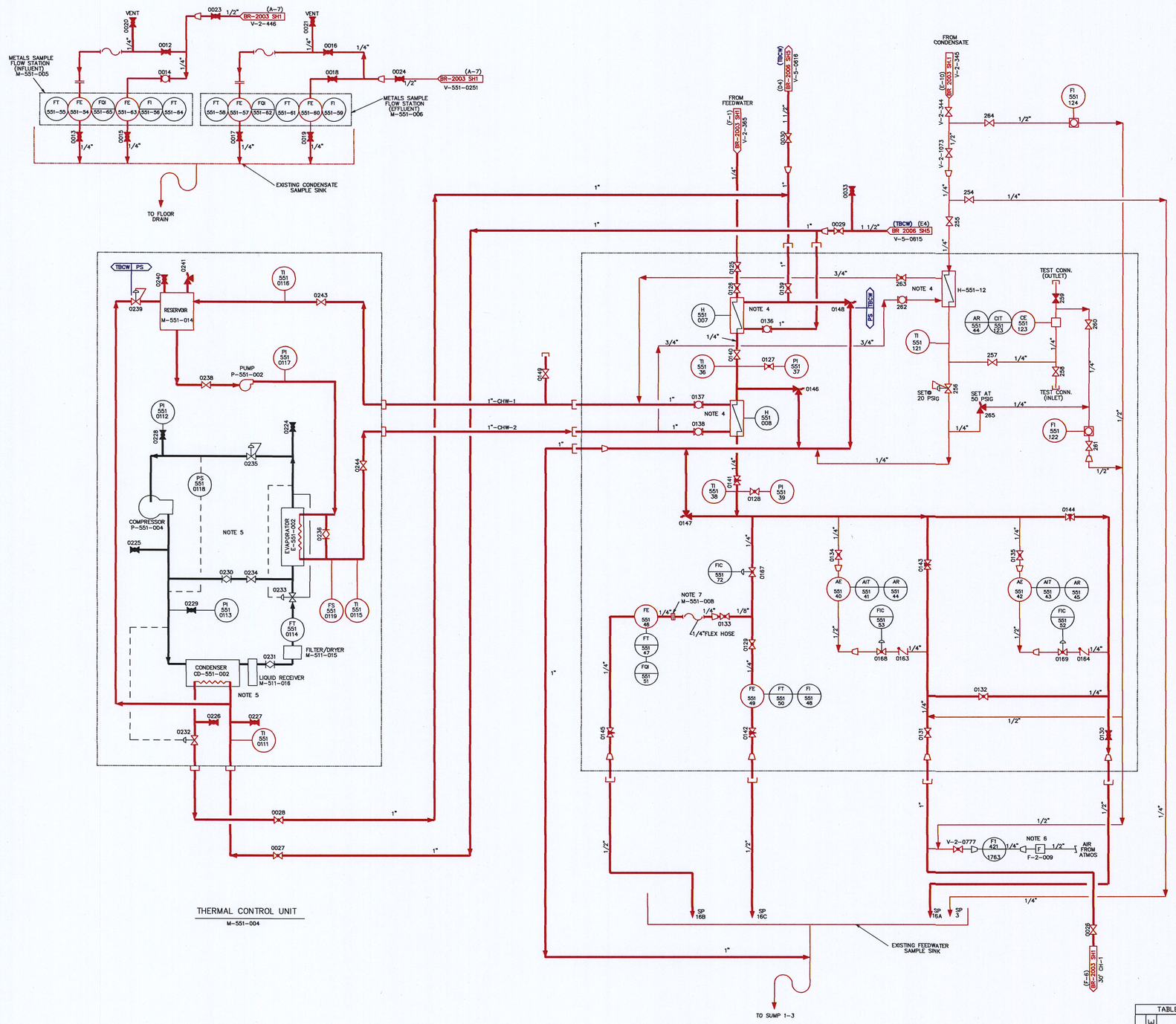

THERMAL CONTROL UNIT
M-551-004

FINAL FEEDWATER FACILITY
M-551-003

NOTES:

1. ALL VALVE NUMBERS ARE PREFIXED BY V-551 UNLESS OTHERWISE NOTED.
2. THIS DRAWING IS BASED ON GU 3E-551-21-1000 SHEET 1 REVISION 8
3. THIS DRAWING INCLUDES THE FOLLOWING LICENSE RENEWAL SYSTEMS:
   TBCW– TURBINE BUILDING CLOSED COOLING WATER
   PS– PROCESS SAMPLING SYSTEM
4. THE FINAL FEEDWATER FACILITY COOLER SHELLSIDE COMPONENTS ARE EVALUATED WITH THE TBCW SYSTEM. THE FINAL FEEDWATER FACILITY COOLER TUBE SIDE COMPONENTS ARE NOT IN SCOPE FOR SPATIAL INTERACTION.
5. THE CONDENSER AND EVAPORATOR ASSOCIATED WITH THE THERMAL CONTROL UNIT IN THE FINAL FEEDWATER FACILITY ARE A "TUBE-IN-TUBE" DESIGN IN WHICH THE REFRIGERANT FLOWS THROUGH THE INNER TUBE WHILE WATER(CLOSED COOLING WATER) FLOWS IN THE ANNULUS BETWEEN THE INNER AND OUTER TUBES. THE OUTER TUBES OF THE CONDENSER ARE EVALUATED WITH THE TBCW SYSTEM. THE OUTER TUBES OF THE EVAPORATOR ARE EVALUATED WITH THE PS SYSTEM. THE THERMAL CONTROL UNIT REFRIGERANT DOES NOT HAVE THE POTENTIAL FOR SPATIAL INTERACTION.
6. PIPING CONTAINS AIR AND THEREFORE DOES NOT HAVE POTENTIAL FOR SPATIAL INTERACTION WITH SAFETY RELATED EQUIPMENT.
7. FLANGE CONNECTION IS INCLUDED WITH PIPING AND FITTINGS FOR AGING MANAGEMENT REVIEW.

TABLE OF ADDITIONS & CHANGES

NO	DATE	DESCRIPTION	REV'D	CHK'D	APP'D
0	7/05/10	INITIAL ISSUE FOR LICENSE RENEWAL	JNV	SBR	KPM

MECHANICAL

LICENSE RENEWAL DRAWING
NUCLEAR LIQUID SAMPLING SYSTEM
FINAL FDW FACIL & THRM CONT. UNIT
FLOW DIAGRAM

OYSTER CREEK
AmerGen

SHEET 1 OF 1 LR-GU-3E-551-21-1000 0

LR-GU-3E-551-21-1000 SH 1 OF 1

D63