NOTES:

1. THE COMPONENT IS SHOWN TO ILLUSTRATE IT FUNCTIONALLY AND MAY NOT REFLECT THE EXACT CONFIGURATION.
2. VALVE POSITIONS REFLECT AN ENGINE RUNNING CONDITION.
3. SEE NOTE 5 ON SHEET 1 OF THIS DRAWING.
4. CONTINUOUS AND INTERMINTENT PRELUBE DOES NOT FLOW THROUGH FILTERS 2F-7119A, 7119B, 7119C.
5. SEE SHEET 1 OF THIS DRAWING FOR ALL REMAINING NOTES.

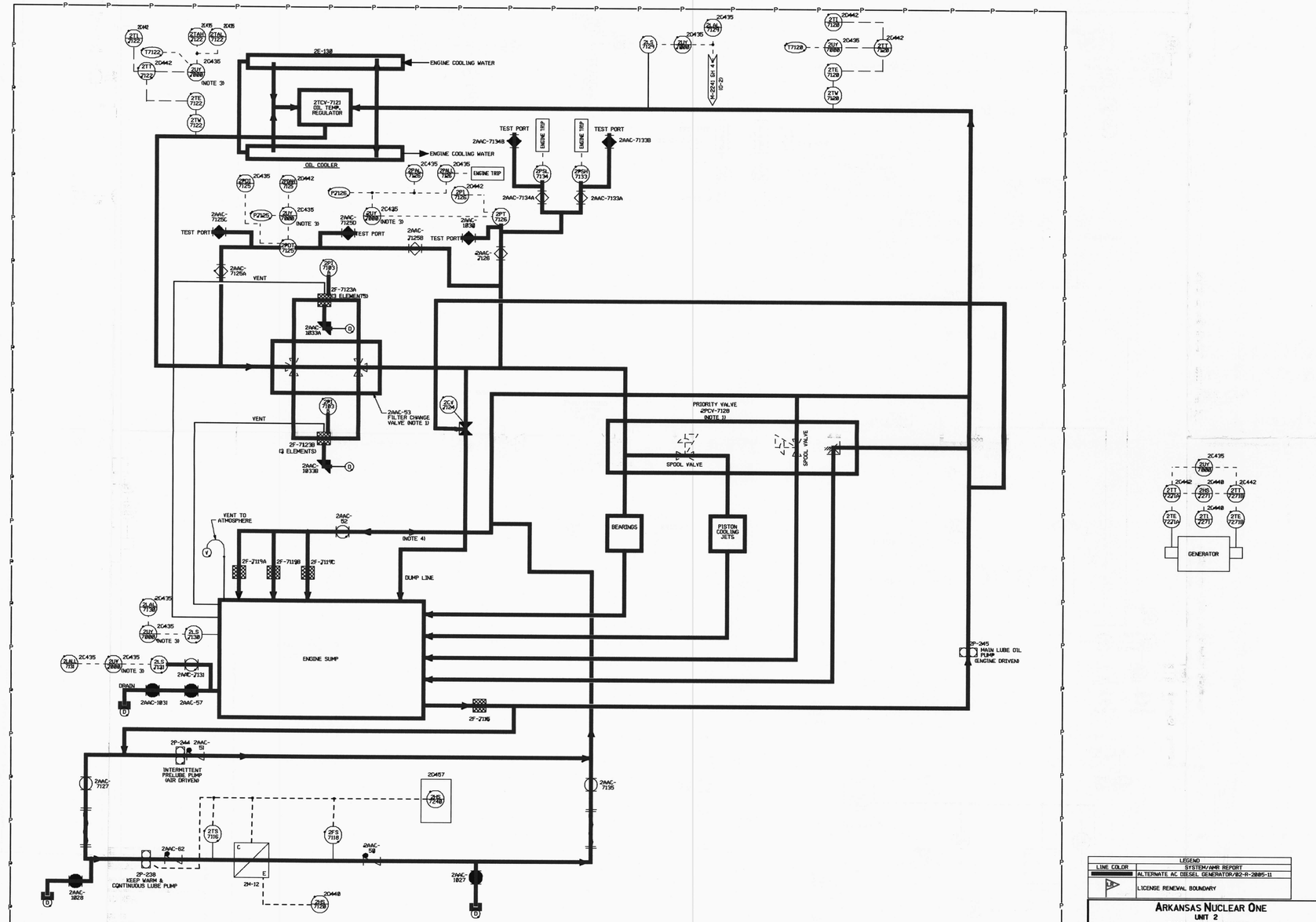

LEGEND	
LINE COLOR	SYSTEM/AMR REPORT
	ALTERNATE AC DIESEL GENERATOR/02-R-2005-11
LR	LICENSE RENEWAL BOUNDARY

ARKANSAS NUCLEAR ONE
UNIT 2
RUSSELLVILLE, ARKANSAS

PIPING & INSTRUMENT DIAGRAM
AAC GENERATOR SYSTEM
LUBE OIL SYSTEM

DRAWING NO	SHEET	REVISION
LRA-M-2241	5	0

UEC Nuclear
A Bechtel Company
7443.002

REV	DISCIPLINE	CHKD	DATE	DISCIPLINE	CHKD	DATE
	STRUCTURAL	N/A	-	INST & CONT	IB	2/5/9
	MECH POWER	CBK	2/5/9	MECH SVCE	N/A	-
	ELECTRICAL	IB	2/5/9	NUCLEAR	N/A	-
	R & QA	N/A	-			

Entergy

RED "X" IF ORIGINAL

BASED ON M-2241 SH 5 REV 3

D-53