FENOC
FirstEnergy Nuclear Operating Company

Perry Nuclear Power Plant
10 Center Road
Perry, Ohio 44081

William R. Kanda
Vice President - Nuclear

440-280-5579
Fax: 440-280-8029

August 28, 2003
PY-CEI/NRR-2730L

United States Nuclear Regulatory Commission
Document Control Desk
Washington, D.C. 20555

Perry Nuclear Power Plant
Docket No. 50-440
Inservice Inspection Summary Report

Ladies and Gentlemen:

In accordance with the American Society of Mechanical Engineers (ASME) Boiler and Pressure Vessel (B&PV) Code, Section XI, "Inservice Inspection", 1989 Edition, Article IWA-6000, the ninth Inservice Inspection Summary Report for the Perry Nuclear Power , Plant is enclosed. This report documents the inservice examination activities conducted from return to commercial operation from the eighth refueling outage until the completion of the ninth refueling outage.

If you have questions or require additional information, please contact Mr. Vernon K. Higaki, Manager-Regulatory Affairs, at (440) 280-5294.

Very truly yours,

for William R. Kanda

Enclosure

cc: NRC Region III Administrator
NRC Resident Inspector
NRR Project Manager
Authorized Nuclear Inservice Inspector (ANII)
State of Ohio

A047

FORM NIS-1 OWNERS REPORT FOR INSERVICE INSPECTIONS

As required by the provisions of the ASME Code Rules

1. Owner FirstEnergy Nuclear Operating Company, 10 Center Road, Perry, OH 44081
(Name and Address of Owner)

2. Plant Perry Nuclear Power Plant, 10 Center Road, Perry, OH 44081
(Name and Address of Plant)

3. Plant Unit 1 4. Owner Certificate of Authorization (if required) N/A

5. Commercial Service Date 11/18/87 6. National Board Number for Unit N/A

7. Components Inspected (only the systems with Class 1 and 2 components are listed in following table)

Component or Appurtenance	Manufacturer or Installer	Manufacturer or Installer Serial No.	PNPP MPL No.	National Board No.
Rx Vessel	GE/CBIN	T-49	1B13	15
Rx Vessel	GE/A&ES	1B13	1B13	64077
Nuclear Boiler System	GE/A&ES	1B21	1B21	64084
Nuclear Boiler System	Pullman Power Products	1B21	1B21	109
Reactor Recirculation System	GE/A&ES	1B33	1B33	64076
Reactor Recirculation System	Pullman Power Products	1B33	1B33	119
CRD Hydraulic Control System	Pullman Power Products	1C11	1C11	92
Standby Liquid Control System	Pullman Power Products	1C41	1C41	108
Containment Atmosphere Monitoring	Johnson Controls	1D23-0064-F	1D23	008
Residual Heat Removal System	Engineers & Fabricators Company	1E12	1E12	1621
Residual Heat Removal System	Pullman Power Products	1E12	1E12	83
Containment Spray System	Pullman Power Products	1E15	1E15	105
Low Pressure Core Spray System	Pullman Power Products	1E21	1E21	85
High Pressure Core Spray System	Pullman Power Products	1E22	1E22	86
Leak Detection System	Johnson Controls	1E51-0068-F	1E31	15
MSIV Leakage Control System	Pullman Power Products	1E32	1E32	104
Reactor Core Isolation Cooling System	Pullman Power Products	1E51	1E51	84

Note: Supplemental sheets in form of lists, sketches, or drawings may be used, provided (1) size is 8½ in. x 11 in., (2) information in items 1 through 6 on this report is included on each sheet, and (3) each sheet is numbered and the number of sheets is recorded at the top of this form.

1. Owner FirstEnergy Nuclear Operating Company, 10 Center Road, Perry, OH 44081
(Name and Address of Owner)

2. Plant Perry Nuclear Power Plant, 10 Center Road, Perry, OH 44081
(Name and Address of Plant)

3. Plant Unit 1 4. Owner Certificate of Authorization (if required) N/A

5. Commercial Service Date 11/18/87 6. National Board Number for Unit N/A

7. Components Inspected (only the systems with Class 1 and 2 components are listed in following table)

Component or Appurtenance	Manufacturer or Installer	Manufacturer or Installer Serial No.	PNPP MPL No.	National Board No.
Integrated Leak Rate System	Pullman Power Products	1E61	1E61	120
Fuel Transfer System	General Electric	1F42	1F42	64079
Reactor Water Cleanup System	GE/A&ES	1G33	1G33	64075
Reactor Water Cleanup System	Pullman Power Products	1G33	1G33	100
Fuel Pool Cleaning System	Pullman Power Products	1G41	1G41	95
Suppression Pool Drain and Cleanup System	Pullman Power Products	1G42	1G42	96
Suppression Pool Makeup System	Johnson Controls	1G43-0065-F	1G43	019
Containment Vessel Purge System	Pullman Power Products	1M14	1M14	113
Drywell Vacuum Relief System	Pullman Power Products	1M16	1M16	115
Containment Vacuum Relief System	Pullman Power Products	1M17	1M17	87
Combustible Gas Control System	Pullman Power Products	1M51	1M51	106
Main Steam System	Pullman Power Products	1N11	1N11	111
Main, Reheat, and Miscellaneous Drains	Pullman Power Products	1N22	1N22	112
Feedwater System	Pullman Power Products	1N27	1N27	89
Condenser Transfer and Storage System	Pullman Power Products	1P11	1P11	102
Mixed Bed Demineralizer Water Sys.	Pullman Power Products	1P22	1P22	73
Nuclear Closed Cooling System	Pullman Power Products	1P43	1P43	101
Containment Chilled Water System	Pullman Power Products	1P50	1P50	103
Service Air System	Fisher Controls	6393471	1P51	6170
Instrument Air System	Pullman Power Products	1P52	1P52	74
Post Accident Sampling System	Johnson Controls	1P87	1P87	034
Containment System	Newport News	NNI-OS-02	1T23	N/A

INSERVICE INSPECTION SUMMARY REPORT

FOR

PERRY NUCLEAR POWER PLANT

(PNPP)

UNIT #1

LOCATED AT: 10 Center Road
Perry, Ohio 44081

OWNER: FirstEnergy Nuclear Operating Company
10 Center Road
Perry, Ohio 44081

REACTOR SUPPLIER: General Electric Corporation
175 Curtner Avenue
San Jose, California 95125

NRC DOCKET NUMBER:	50-440
FACILITY FULL POWER LICENSE:	NPF-58
CAPACITY, Mwe:	1305
COMMERCIAL OPERATION DATE:	November 18, 1987
INSPECTION INTERVAL:	November 18, 1998 - November 17, 2008
INSPECTION PERIOD:	Second (Nov 18, 2001 - Nov 17, 2005)
REFUELING OUTAGE:	RFO9
DOCUMENT COMPLETED:	August 27, 2003

ABSTRACT

Perry Nuclear Power Plant (PNPP) Unit #1 was shutdown for approximately eight weeks to refuel the reactor vessel [Refueling Outage 9(RFO9)] and perform plant maintenance commencing April 5, 2003. During this time period, and during the preceding operating cycle, inservice examinations were performed to comply with plant Technical Specifications and the 1989 Edition of ASME Section XI with no Addenda.

ASME Section XI requires reporting of examination results for Class 1 and 2 pressure retaining components and their supports. This report summarizes the results of Class 1 and 2 examinations, and also Class 3 and Augmented examinations, that were performed in accordance with the schedules within PNPP's Inservice Examination Program Plan (ISEP), Revision 7.

There were no reactor vessel weld or nozzle examinations performed during the operating cycle or during this refueling outage.

Routine Section XI volumetric, surface and visual examinations were performed on Class 1, 2 and 3 piping systems and pressure retaining components. Class 1 piping weld examinations included, for the first time, application of Risk Informed ISI (reference Relief Request IR-049). No reportable indications were identified by any of these examinations.

In-vessel examinations consisted of the required Code visual examinations along with augmented visual examinations of the core spray piping and headers, jet pump assemblies, low pressure core injection lines, feedwater spargers, shroud head stud assembly modifications (SHSAMs), and selected Intermediate Range Monitor, Source Range Monitor, and Local Power Range Monitor dry tubes. Ultrasonic examinations were also performed on the jet pump hold down beams. The augmented examinations were primarily conducted in accordance with the Boiling Water Reactor Vessel and Internals Project (BWRVIP) inspection guidelines. During performance of the ASME Category B-N-1 visual examination of the accessible reactor vessel interior surfaces, deposits of very hard materials were identified on the stainless steel cladding of the upper regions of the vessel interior adjacent to the Main Steam nozzles. The deposits were later found to be located on corresponding areas of the Steam Dryer. The deposits were documented in Condition Report 03-01995 and evaluated as acceptable for continued operation under the condition report's root cause evaluation. The visual examinations of the SHSAMs identified excessive wear on the anti-rotation pins. The wear was documented in Condition Report 03-02831 and evaluated as operable through the next refueling outage.

Other than described above, there were no reportable indications.

RFO9 was the first refueling outage of the second Inspection Period within Perry's second 10-Year inservice Inspection Interval. With the completion of the Cycle 9 and RFO9 examinations, approximately 50% of the examinations scheduled for the second period are done. The remaining second period examinations will be completed by the end of RFO10. Cycle 9 and RFO9 examinations resulted in a complete and acceptable program in that all indications were evaluated for acceptance in accordance with ASME Section XI, IWA-3000 and all required corrective actions and/or evaluations were completed.

CONTENTS

1.0 INTRODUCTION

The information provided herein is supplied to document compliance with ASME B&PV Code, Section XI requirements for reporting inservice inspection results for Class 1 and Class 2 pressure retaining components and their supports. Examination results of Class 3 and Augmented components and their associated supports are included in this report as supplemental information.

This report covers inservice inspection activities performed from Perry Nuclear Power Plant (PNPP)'s return to commercial operation after refueling outage (RFO) 8 through the completion of RFO9.

Included in this report are the following:

- Personnel and Equipment Listings
- Examination Results Summaries
- NIS-2/NR-1 Reports
- Other Pertinent Information

2.0 REFUELING OUTAGE DURATION

The Perry Nuclear Power Plant, Unit #1, was shutdown for RFO9 from April 5, 2003 to May 31, 2003. The plant returned to commercial operation on May 31, 2003, at 00:53 a.m. This is noted as the time when the generator was synchronized to the grid.

3.0 CODE REQUIREMENTS

The inservice inspections were conducted in accordance with the requirements of ASME B&PV Code, Section XI, Division 1, 1989 Edition, no Addenda, with Code Cases N-416-1, N-457, N-460, N-461, N-491, N-498-1, N-509, N-522, N-524, N-546, N-578 as applied in PNPP's Risk-Informed Class 1 Piping program, N-623, and N-627.

4.0 INSPECTION

Inspection activities were conducted by Authorized Nuclear Inservice Inspection personnel from Factory Mutual Insurance Company and Hartford Steam Boiler Company.

5.0 CERTIFICATIONS

Personnel, equipment, and transducer certifications were maintained as required by code and procedures. This section identifies the personnel and equipment utilized in the performance of inservice examinations during Cycle 9 operations and RFO9. Certification records for personnel and equipment are kept on site and are available for review.

5.1 Personnel

Nondestructive Examination (NDE) personnel were qualified and certified to perform specific non-destructive examinations in accordance with PNPP or approved vendor procedures as verified by PNPP's Quality Assurance Section and the Authorized Nuclear Inservice Inspector.

The following is a listing of personnel responsible for the performance of the NDE activities related to ISI during Cycle 9 operations and RFO9:

ISI NDE PERSONNEL

Name	PIN	UT	PT	MT	VT
Anderson, M.	A7814	NA	NA	NA	II++
Andrie, B.	A3521	NA	NA	NA	II+
Askew, D.	A9185	NA	NA	NA	II
Bevan, J.	B8212	NA	II	II	II
Bryant, D	B2224	II	NA	NA	NA
Caulder, R.	C6928	NA	NA	NA	II++
Dame, R.	D3235	NA	NA	NA	II+
Erbacher, L.	E0936	NA	NA	NA	II
Frindy, W.	F6420	NA	III	III	III
Ginder, T.	G8312	II**	II	II	NA
Granger, D.	G2186	NA	NA	NA	II++
Harris, S.	H8634	NA	NA	NA	II+++
Hofer, T.	H8104	NA	NA	NA	III
Jasken, R.	J4369	II**	II	II	NA
Jopko, S.	J9965	NA	NA	NA	II
Joyce, A.	J8579	NA	NA	NA	II++
Kackley, P.	K2715	NA	NA	NA	II++
Knopsider, D.	K2975	NA	NA	NA	III
Kuester, C.	K9472	NA	NA	NA	II+
Kuntz, M.	K4858	NA	NA	NA	II+
Lindquist, D.	L5838	NA	II	II	II
Leach, M.	M2617	NA	NA	NA	II+++
Lynch, N.	L3427	NA	NA	NA	II+
Messenger, J.	M0254	NA	NA	NA	III
Miller, M. Jr.	M8499	NA	NA	NA	II+++
Miller, M. Sr.	M0198	NA	NA	NA	III
Munson, D.	M8099	III**	III	III	NA
Murray, K.	M3018	NA	NA	NA	II+
Musgrove, F.	M7102	NA	NA	NA	II+++
Peterson, M.	P8610	NA	NA	NA	II+
Portmann, R.	P6096	NA	III	III	III
Reaves, L.	R3514	NA	NA	NA	III
Richardt, J.	R5641	NA	NA	NA	II+
Rowland, D.	R0721	NA	NA	NA	II++
Schlortt, H.	S8543	III**	III	III	NA
Seman, S.	S6347	NA	NA	NA	II+
Shinke, W.	S9502	NA	II	II	NA
Snyder, S.	S0392	II**	II	II	NA
Tepsick, M.	T9426	NA	NA	NA	III
Vickerman, D.	V8231	NA	NA	NA	II++
Woodyard, S.	W6061	NA	II	II	II
Wirtz, C.	W9385	NA	NA	NA	III

\+ - Limited to VT-2 only
++ - Limited to in-vessel VT-1 and VT-3 examinations only
+++ - Limited to VT-3 only
** - PDI qualified personnel for manual and/or automated UT

5.2 Equipment and Materials

The equipment and materials used during the performance of the non-destructive examinations were certified and/or calibrated in accordance with site procedures or approved vendor procedures and verified by the Quality Assurance Department and the Authorized Nuclear Inservice Inspector.

The following is a listing of NDE equipment and materials used for the performance of the NDE work activities related to ISI during Cycle 9 operations and RFO9:

THERMOMETERS

Manufacturer	Model No.	PNPP M&TE No.
OMEGA	450 Digital	L70M0019F
OMEGA	450 Digital	L70M0019H
OMEGA	450 Digital	L70M0019J

MAGNETIC PARTICLE EQUIPMENT

Manufacturer	Model No.	PNPP M&TE No.
Parker	B-300 AC Yoke	N/A (PAR ACMT 006)

MAGNETIC PARTICLE MATERIALS

Manufacturer	Type	Batch No.
Magnaflux	8A Red Powder	94B029

DYE PENETRANT MATERIALS

Cleaner	Penetrant	Developer
SKC-S 00K03K	SKL-SP 01A15K	SKD-S2 01A02K

ULTRASONIC FLAW DETECTORS

Manufacturer	Model	Serial No.
Stavely	SONIC-136P	136P991A071181
Stavely	SONIC-136P	136766I
Stavely*	SONIC-137P	B02503

* - Framatome Scope used for remote Jet Pump Beam UT exams

ULTRASONIC COUPLANTS

Manufacturer	Type	Batch No.
Sonotech	Ultragel II	92031
Sonotech	Ultragel II	95325

TRANSDUCERS

Manuf.	Type	Size	Angle	Freq.	Ser No.
GE Manual Exams:					
KB Aerotech	Comp-G	.250" Dia.	45°	5.0 MHz	00XBT3
KB Aerotech	Comp-G	.375" Dia.	45°	1.5 MHz	00HJKC
KB Aerotech	Comp-G	.375" Dia.	45°	2.25 MHz	00BV5T
KB Aerotech	Comp-G	.375" Dia.	45°	2.25 MHz	00HR01
KB Aerotech	Comp-G	.375" Dia.	60°	2.25 MHz	00HR01
KB Aerotech	Comp-G	.375" Dia.	45°	5.0 MHz	00X425
KB Aerotech	Comp-G	.500" Dia.	45°	1.5 MHz	00MPX7
KB Aerotech	F-HP	.500" Dia.	0°	2.25 MHz	00X9C7
KB Aerotech	Comp-G	.500" Dia.	45°	2.25 MHz	00L1KM
KB Aerotech	Comp-G	.500" Dia.	45°	2.25 MHz	00V4B0
SwRI	NA	.500" Dia.	25°L	2.25 MHz	3567
RTD	TRL2-A	2(8x14)mm	45°RL	2.0 MHz	01-109
FRAMATOME Remote Jet Pump Beam Exams:					
Panametrics	IMMERSION	.500" Dia.	0°	2.25 MHz	35245
Panametrics	IMMERSION	.500" Dia.	0°	2.25 MHz	35248
Panametrics	IMMERSION	.500" Dia.	0°	2.25 MHz	35250
Panametrics	IMMERSION	.500" Dia.	0°	2.25 MHz	35252
Panametrics	IMMERSION	.500" Dia.	0°	2.25 MHz	35253
Panametrics	IMMERSION	.500" Dia.	0°	2.25 MHz	35298

6.0 CALIBRATION STANDARDS

Ultrasonic calibration standards used for ISI related work activities during Cycle 9 operations and RFO9 are as listed below:

CALIBRATION STANDARD IDENTIFICATION NUMBERS			
PY-6-80-CS	PY-12-100-CS	PY-18-40-CS	PY-24-40-CS
PY-6-120-CS	PY-12-120-CS	PY-18-STD-CS	PY-24-XX1-SS
PY-8-100-CS	PY-12-CLAD-SS	PY-20-80-CS	PY-26-XX2-CS
PY-10-80-CS	PY-12-PEN-CS-2	PY-20-120-CS	PY-127-1-RPV
PY-12-40-CS	PY-12-XX1-CS-F	PY-20-XX1-CS-F	PY-128-1-RPV
PY-12-80-CS	PY-12-XX1-SS	PY-22-XX1-SS	Framatome JP Beam

7.0 PROCEDURES AND INSPECTION PLANS

The examination procedures and inspection plans used during Cycle 9 operations and RFO9 were as follows:

Number	Rev	Title
Perry NDE Procedures:		
NQI-0941	R8	Liquid Penetrant Examinations
NQI-0942	R6	Magnetic Particle Examinations
NQI-1042	R8	Visual Examinations (VT-1,2,3)
NQI-0944	R6	Ultrasonic Examinations
Inspection Plans used with NQI-0944:		
NDE-002	R5	Ultrasonic Instrument Linearity Verification
NDE-008	R8	Manual Ultrasonic Examination of Ferritic Piping Welds
NDE-017	R4	Ultrasonic Examinations of Corrosion Resistant Clad (CRC) and Dissimilar Metal Piping Welds
NDE-018	R7	Procedure for Ultrasonic Examination of Stainless Steel (Austenitic) Piping Welds
NDE-019	R4	Ultrasonic Examination of Flued Head Penetration Attachment Welds
Framatome ANP NDE Procedures:		
54-ISI-159-04	R4	Procedure for the Remote Ultrasonic Examination of Jet Pump Hold Down Beams
54-ISI-363-02	R2	Remote Underwater In-Vessel Visual Inspection of Reactor Vessel Internals, Components, and Associated Repairs

8.0 RELIEF REQUESTS

Due to geometric, metallurgical, and physical limitations, some of the items scheduled for examination during RFO9 received partial examinations. Within the limitations, examinations were completed to the greatest extent practical. For those in which the examination coverage achieved was less than 90%, relief requests have been submitted and approved.

Additionally, where it has been determined that conformance with any other examination requirements of ASME Section XI is impractical, PNPP has requested relief from the examination requirements.

The following listing summarizes all the relief requests that have been submitted to and approved by the NRC for PNPP's second 10-year Inspection Interval:

RR NO/REV	SYSTEM	TYPE RELIEF	CATEG	ITEM NO
IR-001 R-2	Reactor Pressure Vessel	Partial Exams	B-A B-D	B1.21 B1.22 B1.40 B3.90 B3.100 B4.11
IR-002 R-1	Reactor Recirculation	Partial Exams	B-G-1	B6.180
IR-007 R-1	Residual Heat Removal Low Pressure Core Spray High Pressure Core Spray Reactor Core Isolation-Cooling Feedwater Reactor Water Cleanup Main Steam	Partial Exams	B-K-1	B10.10
IR-009 R-1	Reactor Pressure Vessel	Partial Exams	B-O	B14.10

RELIEF REQUESTS CONTINUED

RR NO/REV	SYSTEM	TYPE RELIEF	CATEG	ITEM NO
IR-012 R-2	Main Steam Residual Heat Removal High Pressure Core Spray Feedwater	Partial Exams	C-C	C3.10 C3.20
IR-013 R-1	High Pressure Core Spray Low Pressure Core Spray Residual Heat Removal	No Exams	C-G	C6.10
IR-015 R-1	Reactor Water Cleanup Residual Heat Removal Low Pressure Coolant-Injection	Partial Exams	C-C	C3.20
IR-018 R-1	Residual Heat Removal	Partial Exams	B-K-1	B10.10
IR-019 R-1	Control Rod Drive Residual Heat Removal High Pressure Core Spray	Partial Exams	C-C	C3.20
IR-021 R-4	Main Steam Emergency Closed Cooling Emergency Service Water	No Exams	D-B	D2.20
IR-023 R-1	All with Snubbers	Alternate Sampling Plan	Tech-Spec	N/A
IR-024 R-1	Reactor Pressure Vessel	Partial Exams	B-F	B5.10
IR-025 R-1	Main Steam	Alternative Exams	B-K-1	B10.10
IR-026 R-1	Main Steam Feedwater	Alternative Exams	C-C	C3.20
IR-027 R-1	Standby & HPCS Diesel Fuel Oil	Alternative Exams	D-B	D2.20
IR-029 R-1	Reactor Recirculation	Alternate Weld Selection	B-J	B9.11
IR-030 R-1	Reactor Pressure Vessel	Alternate Exam for Circ. Shell Welds	B-A	B1.11
IR-032 R-0	Containment	Substitute App J test for VT-3	E-D	E5.10 E5.20
IR-033 R-0	Containment	Alternate Personnel Qual	N/A	N/A
IR-034 R-0	Containment	Inspect new coating IAW coating program	N/A	N/A
IR-035 R-0	Containment	Pre-removal coating inspection IAW coating program	N/A	N/A
IR-037 R-0	Containment	Delete successive exam for repairs	E-C	N/A
IR-038 R-0	Containment	Alternative to torque and tension test	E-G	E8.20
IR-039 R-0	Containment	Alternative to VT-3 lighting and resolution	N/A	N/A
IR-040 R-0	Containment	Alternate UT thickness	N/A	N/A
IR-041 R-0	Containment	Alternate Repair Records	N/A	N/A
IR-042 R-0	Reactor Vessel	Alternate Examination	B-H	B8.10

RELIEF REQUESTS CONTINUED

RR NO/REV	SYSTEM	TYPE RELIEF	CATEG	ITEM NO
IR-043 R-0	Reactor Water Cleanup	Alternate Categorization	B-M-1	B12.30
IR-044 R-0	Reactor Vessel	Use of Code Case N-627	B-G-1	B6.10
IR-045 R-0	Reactor Vessel	Use of Code Case N-623	B-A	B1.30 B1.40
IR-046 R-0	Reactor Vessel	Alternate Length Sizing Criteria	B-A	B1.10 B1.20
IR-048 R-0	N/A	Alternate UT Annual Training Requirements	N/A	N/A
IR-049 R-0	Class 1 Piping	Risk-Informed Application	B-F & B-J	All
PT-001 R-1	Various non-isolable (from the RPV Boundary) Class 2 Components	Alternate System and Inservice Tests	C-H	C7.30 C7.70
PT-006 R-1	All Pressure Retaining Components within the ISI Boundary	Use of Code Case N-546	B-P C-H D-A D-B D-C	All for Press. Testing
PT-007 R-1	Class 3 Safety Relief Valve Discharge Piping	Alternate Hydrostatic Test	D-A	D1.10

Notes:

1. Relief Requests IR-016, IR-017, IR-022, and PT-003 were withdrawn in the 1st Inspection Interval; IR-004, IR-005, IR-006, IR-008, IR-010, IR-011, IR-014, IR-020, IR-028, IR-031, PT-002, PT-004 and PT-005 were withdrawn in the 2nd Inspection Interval; and IR-036, IR-047 and PT-008 were withdrawn without ever being approved.
2. For those Cycle 9 and RFO9 Code required examinations where the examination coverage was limited, the applicable relief request is referenced in the "remarks" column of the Examinations Results Summary (Appendix A) for the particular examination item.

9.0 SCHEDULE CHANGES

Scheduling changes were made during RFO9 to facilitate the examinations, or to account for unforeseen physical or schedule interference's, or radiological conditions. These changes differ from the schedule in Revision 7 of PNPP's Inservice Examination Program (ISEP).

The changes, which will be incorporated in the next revision to the ISEP, are as follows:

MARK NO.	DESCRIPTION AND REASON FOR CHANGE
1B13-SHSAM	Added VT-3 examination of 16 Shroud Head Stud Assembly Modification (SHSAM) assemblies. The exam was performed to check the retainer anti-rotational/ locking pins. The exams were added to RFO9 as a result of the Operational Experience Review of OE 14917 that was performed under CR 02-04534.

SCHEDULE CHANGES CONTINUED

MARK NO.	DESCRIPTION AND REASON FOR CHANGE
1B13-JPRS3-P11/P12 1B13-JPRS3-P13/P14 1B13-JPRS3-P15/P16 1B13-JPRS3-P17/P18 1B13-JPRS3-P19/P20	Added EVT-1 examinations of these components to RFO9. These are the Jet Pump riser to transition piece welds (BWRVIP No. RS-3) for the Recirculation B Loop risers within the downcomer region of the vessel. Within the ISEP, these exams were scheduled for period 3, which only includes RFO11. During participation in an INPO BWRVIP Review Visit of River Bend, it was recognized that these exams should be scheduled sooner in order to meet the intent of BWRVIP-41. As such, these 5 welds were added to the period 2 RFO9 scope (see below for compensatory deletions).
1B13-JPREW-P1/P2 1B13-JPREW-P3/P4 1B13-JPREW-P5/P6 1B13-JPREW-P7/P8 1B13-JPREW-P9/P10	Delete EVT-1 examination of these components. These are the Jet Pump riser thermal sleeve to elbow and elbow to riser welds (BWRVIP No.s RS-1 and RS-2) for the Recirculation A Loop risers within the downcomer region of the vessel. Within the ISEP, these exams are scheduled for period 2, which includes RFO9 and RFO10. During participation in an INPO BWRVIP Review Visit of River Bend, it was recognized that these exams could be scheduled farther out in time and the BWRVIP requirements would still be met. As such, these 10 welds are being rescheduled to RFO10 to compensate for the In-Vessel Visual Inspections (IVVI) that is being added to the RFO9 scope to enhance compliance with BWRVIP-41 and as a result of recent OE reviews.
1E12-0856	Substitute ultrasonic examination of another weld for this weld. This weld was a new selection under the Risk-Informed ISI selection process. Upon attempting to perform the exam in RFO9, it was determined that the weld was buried within a penetration boot seal. As such, weld 1E12-0854 was substituted in its place. Weld 1E12-0854 was able to be substituted without any affect on the Risk-Informed program, as submitted to the NRC via Inservice Examination Relief Request IR-049, because it was within the same risk segment of piping and the submittal only identified the number of welds for the different risk segments not the actual weld numbers.

10.0 EXAMINATION SUMMARY RESULTS

RFO9 was the third refueling outage of Perry's second 10-Year Inservice Inspection Interval and it marked the first of two outages for the second inspection period. With the completion of the Cycle 9 and RFO9 examinations, approximately 50% of the examinations scheduled for the second period are complete. The

remaining second period examinations will be completed by the end of RFO10.

Cycle 9 and RFO9 examinations resulted in a complete and acceptable program in that all indications were evaluated for acceptance in accordance with ASME Section XI, IWA-3000 and all corrective measures or evaluations were completed.

Appendix "A" is a computer-generated summary of the Cycle 9 and RFO9 examination results. Component identifications (Mark Nos.) and order of appearance may differ slightly from that listed in Revision 7 of PNPP's Inservice Examination Program. The differences are to accommodate the database soft-ware program. Original examination data reports are on file and available for review at the site.

11.0 NIS-2/NR-1

Repairs, replacements and modifications are carried out in accordance with PNPP's Nuclear Repair & Repair (non-nuclear) Manual which meets regulatory requirements and quality standards. Compliance of the work is delineated on NIS-2/NR-1 Forms.

The following is a listing of NIS-2/NR-1 forms applicable to this report (Class 1 and 2 only) which have been completed since PNPP's last summary report:

NR-1/NIS-2 FORMS

SYS/NO.	MPL NO.	DESCRIPTION/COMMENTS	CLASS	PG
Reactor (1B13) System Cycle 9 & RFO9 Reports:				
1B13-037	1B13-D0008	Replaced 22 CRDMs and their capscrews	1	58
1B13-038	1B13-D0008	Replaced 8 capscrews of CRDM 22/35	1	104
1B13-039	1B13-D0008	Replaced 3 CRDMs and their capscrews	1	105
Main Steam (1B21) System Cycle 9 & RFO9 Reports:				
1B21-331	1B21	Cut capped and abandoned in place outboard MSIV B-loop packing leak-off line	1	112
1B21-332	1B21	Cut capped and abandoned in place outboard MSIV D-loop packing leak-off line	1	113
1B21-333	1B21	Cut capped and abandoned in place outboard MSIV C-loop packing leak-off line	1	114
1B21-334	1B21	Cut capped and abandoned in place outboard MSIV A-loop packing leak-off line	1	115
1B21-335	1B21-G7071	Replaced E-Systems hydraulic snubber with like snubber	1	116
1B21-337	1B21-F0041B	Replaced SRV with like SRV	1	118
1B21-338	1B21-F0041D	Replaced SRV with like SRV	1	120
1B21-339	1B21-F0041F	Replaced SRV with like SRV	1	122
1B21-340	1B21-F0041K	Replaced SRV with like SRV	1	124
1B21-341	1B21-F0047B	Replaced SRV with like SRV	1	126
1B21-342	1B21-F0047D	Replaced SRV with like SRV	1	128
1B21-343	1B21-F0047F	Replaced SRV with like SRV	1	130
1B21-344	1B21-F0047H	Replaced SRV with like SRV	1	132
1B21-345	1B21-F0051B	Replaced SRV with like SRV	1	134

NR-1/NIS-2 FORMS CONTINUED

SYS/NO.	MPL NO.	DESCRIPTION/COMMENTS	CLASS	PG
1B21-346	1B21-F0051D	Replaced SRV with like SRV	1	136
1B21-347	1B21-F0041C	Replaced SRV with like SRV	1	138
1B21-348	1B21-F0032A	Removed and reinstalled test connection on side of valve	1	140
1B21-349	1B21-F0002	Replaced 2" globe valve with similar valve made of different materials	1	141
1B21-350	1B21-F0001	Replaced 2" globe valve with similar valve made of different materials	1	143
1B21-351	1B21-F0022C	Reworked valve and replaced bolting	1	145
Reactor Recirculation (1B33) System Cycle 9 & RF09 Reports:				
1B33-114	1B33-G7066A	Replaced E-Systems hydraulic snubber with like snubber	1	146
1B33-115	1B33-G7068A	Replaced E-Systems hydraulic snubber with like snubber	1	148
1B33-116	1B33-G7065A	Replaced E-Systems hydraulic snubber with like snubber	1	150
1B33-117	1B33-G7070A	Replaced E-Systems hydraulic snubber with like snubber	1	153
1B33-118	1B33-G7069A	Replaced E-Systems hydraulic snubber with like snubber	1	156
1B33-119	1B33-G7067A	Replaced E-Systems hydraulic snubber with like snubber	1	159
1B33-120	1B33-G7067A	Replaced E-Systems hydraulic snubber piston rod assembly with different size assembly	1	161
Control Rod Drive (1C11) System Cycle 9 & RF09 Reports:				
1C11-035	1C11-F163A	Small bore support removed for access and reinstalled	2	163
Standby Liquid Control (0&1C41) System Cycle 9 & RF09 Reports:				
1C41-030	1C41-F0004A	Replaced primer/trigger assembly of explosive SQUIB valve	1	164
1C41-031	1C41-F0004B	Replaced primer/trigger assembly of explosive SQUIB valve	1	168
1C41-032	1C41-F0029B	Replaced 1x2" relief valve with like valve	2	172
1C41-033	1C41-F0004B	Replaced primer/trigger assembly of explosive SQUIB valve	1	174
Residual Heat Removal (1E12) System Cycle 9 & RF09 Reports:				
1E12-270	1E12	Installed ¾" passive vent line downstream of check valve 1E12-F0042C	2	178
1E12-271	1E12-H0026	Replaced load stud and jam nut of snubber following testing	1	179
1E12-272	1E12-H0386	Replaced PSA mechanical snubber with Lisega hydraulic snubber	2	180
1E12-273	1E12-H0769	Replaced PSA mechanical snubber with Lisega hydraulic snubber	2	181
1E12-274	1E12-H0410	Replaced load pin of snubber following testing	2	182
1E12-275	1E12-F0064C	Replaced gate of 6" gate valve	2	183
1E12-276	1E12-F0055A	Replaced 4" relief vavle with like valve	2	184
1E12-277	1E12-F0063B	Replaced 8" check valve with like valve	2	186
1E12-278	1E12-D0003A	Replaced 18" orifice plate with like plate	2	188

NR-1/NIS-2 FORMS CONTINUED

SYS/NO.	MPL NO.	DESCRIPTION/COMMENTS	CLASS	PG
High Pressure Core Spray (1E22) System Cycle 9 & RFO9 Reports:				
1E22-054	1E22-H0034	Replaced PSA mechanical snubber with like snubber	2	189
1E22-055	1E22-H0032	Replaced PSA mechanical snubber with like snubber	2	191
1E22-056	1E22-D0005	Replaced 12" orifice plate with like plate	2	193
MSIV Leakage Control (1E32) System Cycle 9 & RFO9 Reports:				
1E32-104	1E32-H0137 1E32-H0138 1E32-H0139 1E32-H0140 1E32-H0141 1E32-H0142 1E32-H0152 1E32-H0153 1E32-H0154 1E32-H0164 1E32-H0165 1E32-H0167 1E32-H0230 1E32-H0231 1E32-H0233 1E32-H0234 1E32-H0235 1E32-H0237 1E32-H0238 1E32-H0240 1E32-H0243 1E32-H0244 1E32-H0245 1E32-H0246 1E32-H0247 1E32-H0248 1E32-H0250 1E32-H0251 1E32-H0270	Removed supports from small bore piping that was previously abandoned	2	194
Reactor Core Isolation Cooling (1E51) System Cycle 9 & RFO9 Reports:				
1E51-124	1E51-F0011	Replaced 6" Duo check valve with like valve	2	195
1E51-125	1E51-C0001	Design temperature limit of pump modified through engineering evaluation	2	196
1E51-126	1E51-H0156	Replaced PSA mechanical snubber with like snubber	2	198
1E51-127	1E51-H0110	Replaced PSA mechanical snubber with like snubber	2	200
1E51-128	1E51-H0111	Replaced PSA mechanical snubber with like snubber	2	202
1E51-129	1H22-H1915	Replaced PSA mechanical snubber with like snubber	2	204
1E51-130	1E51-F0066	Replaced disk of 6" check valve	1	205
1E51-131	1B13-D0003	Replaced bolting on head spray tee	1	207
Local Panels and Racks (1H22) System Cycle 9 & RFO9 Reports:				
1H22-004	1H22-H0389	Replaced PSA Mechanical snubber with like snubber	2	208

NR-1/NIS-2 FORMS CONTINUED

SYS/NO.	MPL NO.	DESCRIPTION/COMMENTS	CLASS	PG
Combustible Gas Control (1M51) System Cycle 9 & RFO9 Reports:				
1M51-026	1M51-H0124	Replaced PSA mechanical snubber with like snubber	2	209

Copies of the NIS-2/NR-1 forms are contained in Appendix "B" and the corresponding starting page numbers are provided in the above table.

APPENDIX A

"CYCLE 9 & RFO-9 EXAMINATION RESULTS SUMMARY"

INSERVICE INSPECTION SUMMARY REPORT

FOR

PERRY NUCLEAR POWER PLANT

(PNPP)

UNIT 1

First Energy Nuclear Operating Company

Perry Nuclear Power Plant

ISI Summary Report No. P0059-0009
Second Interval, Second Period, First Outage (RFO9)
Cycle 9 and RFO9 Inservice Examinations

Prepared by: _____ Date: 8/22/03
ISI Engineer

Reviewed by: Thomas L Fogs ANII Date: 8/27/03
Authorized Nuclear Inservice Inspector

ID of Component Examined Description of Component Size - Sched. - ISI Dwg. No.	ASME Category ASME Item No.	Exam Method	Exam Report No.	Status	Remarks
1B13-N8-B RPV HEAD SPRAY NOZZLE N8 TO FLANGE BOLTING 6" N/A 305-006-103	B-G-2 B7.10	VT-1	1042-03-0031	SAT	Examined 1 new stud and 3 new nuts.
1B13-N8-B RPV HEAD SPRAY NOZZLE N8 TO FLANGE BOLTING 6" N/A 305-006-103	B-G-2 B7.10	VT-1	1042-03-0037	SAT	Examined 12 studs and nuts in place after head spray piping reassembly. See report 1042-03-0031 for replacement bolting exams.
1B13-CSHP-CW-P2 HP CORE SPRAY FLOW DIVIDER REDUCER WELDS 6" 120/40 305-006-113	X-A X3.10	EVT-1	1Q800-03-021	SAT	Coverage limited to appx. 60% due to proximity of the Vessel wall.
1B13-CSHP-CW-P3a HP CORE SPRAY COUPLING TO HORIZONTAL PIPE 6" 40 305-006-113	X-A X3.10	EVT-1	1Q800-03-021	SAT	Coverage limited to appx. 60% due to proximity of the Vessel wall.
1B13-CSHP-CW-P5 HP CORE SPRAY UPPER RISER PIPE TO COUPLING 6" 40 305-006-113	X-A X3.10	EVT-1	1Q800-03-021	SAT	Coverage limited to appx. 60% due to proximity of the Vessel wall.
1B13-CSHP-CCW-P2 HP CORE SPRAY FLOW DIVIDER REDUCER WELDS 6" 120/40 305-006-113	X-A X3.10	EVT-1	1Q800-03-021	SAT	Coverage limited to appx. 60% due to proximity of the Vessel wall.
1B13-CSHP-CCW-P3a HP CORE SPRAY COUPLING TO HORIZONTAL PIPE 6" 40 305-006-113	X-A X3.10	EVT-1	1Q800-03-021	SAT	Coverage limited to appx. 60% due to proximity of the Vessel wall.
1B13-CSHP-CCW-P5 HP CORE SPRAY UPPER RISER PIPE TO COUPLING 6" 40 305-006-113	X-A X3.10	EVT-1	1Q800-03-021	SAT	Coverage limited to appx. 60% due to proximity of the Vessel wall.
1B13-CSHP-PB HP CORE SPRAY PIPING BRACKETS (3) N/A N/A 305-006-114	X-A X3.12	EVT-1	1Q800-03-021	SAT	Coverage limited to appx. 80% due to proximity of the Core Spray piping.
1B13-CSLP-P1 LP CORE SPRAY THERMAL SLEEVE TO FLOW DIVIDER WELDS (2) 10" 120 305-006-113	X-A X3.11	EVT-1	1Q800-03-021	SAT	EVT-1 coverage not possible due to the welds being at or inside the nozzle bore so just visually examined into the nozzle bore as best as possible.

ID of Component Examined Description of Component Size - Sched. - ISI Dwg. No.	ASME Category ASME Item No.	Exam Method	Exam Report No.	Status	Remarks
1B13-CSLP-CW-P2 LP CORE SPRAY FLOW DIVIDER REDUCER WELDS 6" 120/40 305-006-113	X-A X3.10	EVT-1	1Q800-03-021	SAT	Coverage limited to appx. 60% due to proximity of the Vessel wall.
1B13-CSLP-CW-P3b LP CORE SPRAY HORIZONTAL PIPE TO COUPLING 6" 40 305-006-113	X-A X3.11	EVT-1	1Q800-03-021	SAT	Coverage limited to appx. 60% due to proximity of the Vessel wall.
1B13-CSLP-CW-P3a LP CORE SPRAY COUPLING TO HORIZONTAL PIPE 6" 40 305-006-113	X-A X3.10	EVT-1	1Q800-03-021	SAT	Coverage limited to appx. 60% due to proximity of the Vessel wall.
1B13-CSLP-CW-P5 LP CORE SPRAY UPPER RISER PIPE TO COUPLING 6" 40 305-006-113	X-A X3.10	EVT-1	1Q800-03-021	SAT	Coverage limited to appx. 60% due to proximity of the Vessel wall.
1B13-CSLP-CW-P6 LP CORE SPRAY COUPLING TO LOWER RISER PIPE 6" 40 305-006-113	X-A X3.11	EVT-1	1Q800-03-021	SAT	Coverage limited to appx. 60% due to proximity of the Vessel wall.
1B13-CSLP-CW-P4c LP CORE SPRAY LOWER RISER PIPE TO ELBOW 6" 40/120 305-006-113	X-A X3.11	EVT-1	1Q800-03-021	SAT	Coverage limited to appx. 60% due to proximity of the Vessel wall.
1B13-CSLP-CW-P4d LP CORE SPRAY ELBOW TO SHROUD FLANGE 6" 120/40 305-006-113	X-A X3.11	EVT-1	1Q800-03-021	SAT	Coverage limited to appx. 90% due to proximity of the Core Spray piping.
1B13-CSLP-CCW-P2 LP CORE SPRAY FLOW DIVIDER REDUCER WELDS 6" 120/40 305-006-113	X-A X3.10	EVT-1	1Q800-03-021	SAT	Coverage limited to appx. 60% due to proximity of the Vessel wall.
1B13-CSLP-CCW-P3a LP CORE SPRAY COUPLING TO HORIZONTAL PIPE 6" 40 305-006-113	X-A X3.10	EVT-1	1Q800-03-021	SAT	Coverage limited to appx. 60% due to proximity of the Vessel wall.
1B13-CSLP-CCW-P5 LP CORE SPRAY UPPER RISER PIPE TO COUPLING 6" 40 305-006-113	X-A X3.10	EVT-1	1Q800-03-021	SAT	Coverage limited to appx. 60% due to proximity of the Vessel wall.

ID of Component Examined Description of Component Size - Sched. - ISI Dwg. No.	ASME Category ASME Item No.	Exam Method	Exam Report No.	Status	Remarks
1B13-CSLP-PB LP CORE SPRAY PIPING BRACKETS (3) N/A N/A 305-006-114	X-A X3.12	EVT-1	1Q800-03-021	SAT	Coverage limited to appx. 80% due to proximity of the Core Spray piping.
1B13-CSS-173-S2 CORE SPRAY SPARGER TEE TO SPARGER PIPE WELDS (2) 5" 305-006-115	X-A X3.20	EVT-1	1Q800-03-040	SAT	Coverage limited to appx. 60% due to proximity of the Shroud wall.
1B13-CSS-173-S4 CORE SPRAY SPARGER PIPE TO END CAP WELDS (2) 5" 305-006-115	X-A X3.20	EVT-1	1Q800-03-040	SAT	Coverage limited to appx. 60% due to proximity of the Shroud wall.
1B13-CSS-173-SB CORE SPRAY SPARGER BRACKETS N/A N/A 305-006-116	X-A X3.22	VT-1	1Q800-03-040	SAT	Coverage limited to appx. 50% due to proximity of the CS Sparger.
1B13-CSS-187-S2 CORE SPRAY SPARGER TEE TO SPARGER PIPE WELDS (2) 5" 305-006-115	X-A X3.20	EVT-1	1Q800-03-040	SAT	Coverage limited to appx. 60% due to proximity of the Shroud wall.
1B13-CSS-187-S3ab CORE SPRAY SPARGER SPRAY NOZZLE WELDS (2 EA NOZZ) 5" 305-006-115	X-A X3.21	VT-1	1Q800-03-040	SAT	Exam limited to the accessible areas of each of the spray nozzles due to the CS Sparger configuration.
1B13-CSS-187-S4 CORE SPRAY SPARGER PIPE TO END CAP WELDS (2) 5" 305-006-115	X-A X3.20	EVT-1	1Q800-03-040	SAT	Coverage limited to appx. 60% due to proximity of the Shroud wall.
1B13-CSS-187-SB CORE SPRAY SPARGER BRACKETS N/A N/A 305-006-116	X-A X3.22	VT-1	1Q800-03-040	SAT	Coverage limited to appx. 50% due to proximity of the CS Sparger.
1B13-FWS FEEDWATER SPARGERS N/A N/A 305-006-118	X-C X11.10	VT-3	1Q800-03-016	SAT	None.
1B13-FWS-DAM 150 DEGREE FW SPARGER DAMAGE, NOZZ 5-8 FROM CCW N/A N/A 305-006-118	X-A X6.13	VT-1	1Q800-03-016	SAT	None.

ID of Component Examined Description of Component Size - Sched. - ISI Dwg. No.	ASME Category ASME Item No.	Exam Method	Exam Report No.	Status	Remarks
1B13-INTERIOR REACTOR VESSEL INTERIOR REGION N/A N/A 305-006-101	B-N-1 B13.10	VT-3	1042-03A-035	SAT	Direct visual of top head interior.
1B13-INTERIOR REACTOR VESSEL INTERIOR REGION N/A N/A 305-006-101	B-N-1 B13.10	VT-3	1Q800-03-015	UNSAT	Exam found unusual crud deposits on the upper (i.e., steam region) vessel ID cladding. Under CR-03-01995 the hard deposits were evaluated as acceptable for continued operation.
1B13-IRM-16/13 IRM INSTRUMENT DRY TUBE B N/A N/A 305-006-117	X-A X2.10	VT-3	1Q800-03-078	SAT	Examined from two opposing quadrants to achieve full coverage.
1B13-IRM-16/53 IRM INSTRUMENT DRY TUBE A N/A N/A 305-006-117	X-A X2.10	VT-3	1Q800-03-078	SAT	Examined from two opposing quadrants to achieve full coverage.
1B13-IRM-24/29 IRM INSTRUMENT DRY TUBE D N/A N/A 305-006-117	X-A X2.10	VT-3	1Q800-03-078	SAT	Examined from two opposing quadrants to achieve full coverage.
1B13-IRM-24/37 IRM INSTRUMENT DRY TUBE C N/A N/A 305-006-117	X-A X2.10	VT-3	1Q800-03-078	SAT	Examined from two opposing quadrants to achieve full coverage.
1B13-JPA-P3/P4 JET PUMP NOZZLE TO MIXER ASSEMBLY N/A N/A 305-006-126	X-A X1.30	VT-3	1Q800-03-047	SAT	Exam found only light uniform coating of crud that was less than last refuel.
1B13-JPA-P13/P14 JET PUMP NOZZLE TO MIXER ASSEMBLY N/A N/A 305-006-126	X-A X1.30	VT-3	1Q800-03-047	SAT	Exam found only light uniform coating of crud that was less than last refuel.
1B13-JPHDB-P1/P2 JET PUMP HOLD DOWN BEAMS (2) N/A N/A 305-006-125	X-A X1.10	UT	1Q800-03-087	NRI	Exam included UT of BB1 and BB2 areas supplemented by VT-1 of BB3 areas. See report 1Q800-03-047 for VT-1 results.
1B13-JPHDB-P3/P4 JET PUMP HOLD DOWN BEAMS (2) N/A N/A 305-006-125	X-A X1.10	UT	1Q800-03-087	NRI	Exam included UT of BB1 and BB2 areas supplemented by VT-1 of BB3 areas. See report 1Q800-03-047 for VT-1 results.

ID of Component Examined Description of Component Size - Sched. - ISI Dwg. No.	ASME Category ASME Item No.	Exam Method	Exam Report No.	Status	Remarks
1B13-JPHDB-P5/P6 JET PUMP HOLD DOWN BEAMS (2) N/A N/A 305-006-125	X-A X1.10	UT	1Q800-03-087	NRI	Exam included UT of BB1 and BB2 areas supplemented by VT-1 of BB3 areas. See report 1Q800-03-047 for VT-1 results.
1B13-JPHDB-P7/P8 JET PUMP HOLD DOWN BEAMS (2) N/A N/A 305-006-125	X-A X1.10	UT	1Q800-03-087	NRI	Exam included UT of BB1 and BB2 areas supplemented by VT-1 of BB3 areas. See report 1Q800-03-047 for VT-1 results.
1B13-JPHDB-P9/P10 JET PUMP HOLD DOWN BEAMS (2) N/A N/A 305-006-125	X-A X1.10	UT	1Q800-03-087	NRI	Exam included UT of BB1 and BB2 areas supplemented by VT-1 of BB3 areas. See report 1Q800-03-047 for VT-1 results.
1B13-JPHDB-P11/P12 JET PUMP HOLD DOWN BEAMS (2) N/A N/A 305-006-125	X-A X1.10	UT	1Q800-03-087	NRI	Exam included UT of BB1 and BB2 areas supplemented by VT-1 of BB3 areas. See report 1Q800-03-047 for VT-1 results.
1B13-JPHDB-P13/P14 JET PUMP HOLD DOWN BEAMS (2) N/A N/A 305-006-125	X-A X1.10	UT	1Q800-03-087	NRI	Exam included UT of BB1 and BB2 areas supplemented by VT-1 of BB3 areas. See report 1Q800-03-047 for VT-1 results.
1B13-JPHDB-P15/P16 JET PUMP HOLD DOWN BEAMS (2) N/A N/A 305-006-125	X-A X1.10	UT	1Q800-03-087	NRI	Exam included UT of BB1 and BB2 areas supplemented by VT-1 of BB3 areas. See report 1Q800-03-047 for VT-1 results.
1B13-JPHDB-P17/P18 JET PUMP HOLD DOWN BEAMS (2) N/A N/A 305-006-125	X-A X1.10	UT	1Q800-03-087	NRI	Exam included UT of BB1 and BB2 areas supplemented by VT-1 of BB3 areas. See report 1Q800-03-047 for VT-1 results.
1B13-JPHDB-P19/P20 JET PUMP HOLD DOWN BEAMS (2) N/A N/A 305-006-125	X-A X1.10	UT	1Q800-03-087	NRI	Exam included UT of BB1 and BB2 areas supplemented by VT-1 of BB3 areas. See report 1Q800-03-047 for VT-1 results.
1B13-JPIN-P3/P4 JET PUMP INLET WELDS (4) N/A N/A 305-006-126	X-A X1.80	EVT-1	1Q800-03-047	SAT	Coverage limited to appx. 40% by component geometry and camera access.
1B13-JPIN-P5/P6 JET PUMP INLET WELDS (4) N/A N/A 305-006-126	X-A X1.80	EVT-1	1Q800-03-047	SAT	Coverage limited to appx. 50% by component geometry and camera access.

ID of Component Examined Description of Component Size - Sched. - ISI Dwg. No.	ASME Category ASME Item No.	Exam Method	Exam Report No.	Status	Remarks
1B13-JPIN-P9/P10 JET PUMP INLET WELDS (4) N/A N/A 305-006-126	X-A X1.80	EVT-1	1Q800-03-047	SAT	Coverage limited to appx. 40% by component geometry and camera access.
1B13-JPRS3-P11/P12 JET PUMP RISER PIPE TO TRANSITION PIECE WELD N/A N/A 305-006-126	X-A X1.71	EVT-1	1Q800-03-047	SAT	Coverage limited to appx. 50% by component geometry and camera access.
1B13-JPRS3-P13/P14 JET PUMP RISER PIPE TO TRANSITION PIECE WELD N/A N/A 305-006-126	X-A X1.71	EVT-1	1Q800-03-047	SAT	Coverage limited to appx. 50% by component geometry and camera access.
1B13-JPRS3-P15/P16 JET PUMP RISER PIPE TO TRANSITION PIECE WELD N/A N/A 305-006-126	X-A X1.71	EVT-1	1Q800-03-047	SAT	Coverage limited to appx. 50% by component geometry and camera access.
1B13-JPRS3-P17/P18 JET PUMP RISER PIPE TO TRANSITION PIECE WELD N/A N/A 305-006-126	X-A X1.71	EVT-1	1Q800-03-047	SAT	Coverage limited to appx. 50% by component geometry and camera access.
1B13-JPRS3-P19/P20 JET PUMP RISER PIPE TO TRANSITION PIECE WELD N/A N/A 305-006-126	X-A X1.71	EVT-1	1Q800-03-047	SAT	Coverage limited to appx. 60% by component geometry and camera access.
1B13-JPTW-P01 JET PUMP RESTRAINER ADJUSTING SCREW TACK WELDS N/A N/A 305-006-125	X-A X1.50	VT-3	1Q800-03-047	SAT	None.
1B13-JPTW-P02 JET PUMP RESTRAINER ADJUSTING SCREW TACK WELDS N/A N/A 305-006-125	X-A X1.50	VT-3	1Q800-03-047	SAT	None.
1B13-JPTW-P03 JET PUMP RESTRAINER ADJUSTING SCREW TACK WELDS N/A N/A 305-006-125	X-A X1.50	VT-3	1Q800-03-047	SAT	None.
1B13-JPTW-P04 JET PUMP RESTRAINER ADJUSTING SCREW TACK WELDS N/A N/A 305-006-125	X-A X1.50	VT-3	1Q800-03-047	SAT	None.

ID of Component Examined Description of Component Size - Sched. - ISI Dwg. No.	ASME Category ASME Item No.	Exam Method	Exam Report No.	Status	Remarks
1B13-JPTW-P05 JET PUMP RESTRAINER ADJUSTING SCREW TACK WELDS N/A N/A 305-006-125	X-A X1.50	VT-3	1Q800-03-047	UNSAT	Exam found .019" vessel side and .010" shroud side set screw gaps. However, the tack welds were intact and there was no sign of wedge wear. Under CR 03-02779 the gaps were evaluated as acceptable for continued operation.
1B13-JPTW-P06 JET PUMP RESTRAINER ADJUSTING SCREW TACK WELDS N/A N/A 305-006-125	X-A X1.50	VT-3	1Q800-03-047	SAT	None.
1B13-JPTW-P07 JET PUMP RESTRAINER ADJUSTING SCREW TACK WELDS N/A N/A 305-006-125	X-A X1.50	VT-3	1Q800-03-047	UNSAT	Exam found .010" vessel side set screw gap. However, the tack welds were intact and there was no sign of wedge wear. Under CR 03-02779 the gaps were evaluated as acceptable for continued operation.
1B13-JPTW-P08 JET PUMP RESTRAINER ADJUSTING SCREW TACK WELDS N/A N/A 305-006-125	X-A X1.50	VT-3	1Q800-03-047	SAT	None.
1B13-JPTW-P09 JET PUMP RESTRAINER ADJUSTING SCREW TACK WELDS N/A N/A 305-006-125	X-A X1.50	VT-3	1Q800-03-047	SAT	None.
1B13-JPTW-P10 JET PUMP RESTRAINER ADJUSTING SCREW TACK WELDS N/A N/A 305-006-125	X-A X1.50	VT-3	1Q800-03-047	SAT	None.
1B13-JPTW-P11 JET PUMP RESTRAINER ADJUSTING SCREW TACK WELDS N/A N/A 305-006-125	X-A X1.50	VT-3	1Q800-03-047	SAT	None.
1B13-JPTW-P12 JET PUMP RESTRAINER ADJUSTING SCREW TACK WELDS N/A N/A 305-006-125	X-A X1.50	VT-3	1Q800-03-047	UNSAT	Exam found .010" vessel side set screw gap. However, the tack welds were intact and there was no sign of wedge wear. Under CR 03-02779 the gaps were evaluated as acceptable for continured operation..
1B13-JPTW-P13 JET PUMP RESTRAINER ADJUSTING SCREW TACK WELDS N/A N/A 305-006-125	X-A X1.50	VT-3	1Q800-03-047	UNSAT	Exam found .010" vessel side set screw gap. However, the tack welds were intact and there was no sign of wedge wear. Under CR 03-02779 the gaps were evaluated as acceptable for continured operation..
1B13-JPTW-P14 JET PUMP RESTRAINER ADJUSTING SCREW TACK WELDS N/A N/A 305-006-125	X-A X1.50	VT-3	1Q800-03-047	UNSAT	Exam found .010" vessel side set screw gap. However, the tack welds were intact and there was no sign of wedge wear. Under CR 03-02779 the gaps were evaluated as acceptable for continued operation.

ID of Component Examined Description of Component Size - Sched. - ISI Dwg. No.	ASME Category ASME Item No.	Exam Method	Exam Report No.	Status	Remarks
1B13-JPTW-P15 JET PUMP RESTRAINER ADJUSTING SCREW TACK WELDS N/A N/A 305-006-125	X-A X1.50	VT-3	1Q800-03-047	UNSAT	Exam found .020" vessel side set screw gap. However, the tack welds were intact and there was no sign of wedge wear. Under CR 03-02779 the gaps were evaluated as acceptable for continued operation.
1B13-JPTW-P16 JET PUMP RESTRAINER ADJUSTING SCREW TACK WELDS N/A N/A 305-006-125	X-A X1.50	VT-3	1Q800-03-047	SAT	None.
1B13-JPTW-P17 JET PUMP RESTRAINER ADJUSTING SCREW TACK WELDS N/A N/A 305-006-125	X-A X1.50	VT-3	1Q800-03-047	UNSAT	Exam found .012" vessel side set screw gap. However, the tack welds were intact and there was no sign of wedge wear. Under CR 03-02779 the gaps were evaluated as acceptable for continued operation.
1B13-JPTW-P18 JET PUMP RESTRAINER ADJUSTING SCREW TACK WELDS N/A N/A 305-006-125	X-A X1.50	VT-3	1Q800-03-047	SAT	None.
1B13-JPTW-P19 JET PUMP RESTRAINER ADJUSTING SCREW TACK WELDS N/A N/A 305-006-125	X-A X1.50	VT-3	1Q800-03-047	UNSAT	Exam found .010" shroud side set screw gap. However, the tack welds were intact and there was no sign of wedge wear. Under CR 03-02779 the gaps were evaluated as acceptable for continued operation.
1B13-JPTW-P20 JET PUMP RESTRAINER ADJUSTING SCREW TACK WELDS N/A N/A 305-006-125	X-A X1.50	VT-3	1Q800-03-047	SAT	None.
1B13-LPRM-SAMP LPRM INSTRUMENT DRY TUBES 10% SAMPLE N/A N/A 305-006-117	X-A X2.11	VT-3	1Q800-03-078	SAT	Achieved 10% sample by examining LPRM's 16/17 and 48/17 from two quadrants (full coverage) and 16/25, 24/25, 40/41, 32/49 and 40/49 from one (half coverage).
1B13-LPCI-A61 LOOP A LPCI COUPLING PIPE WELDS (4) N/A N/A 305-006-124	X-A X8.10	EVT-1	1Q800-03-018	SAT	None.
1B13-LPCI-AST LOOP A LPCI COUPLING STRUT WELDS (3) N/A N/A 305-006-124	X-A X8.20	EVT-1	1Q800-03-018	SAT	None.
1B13-LPCI-A66 LOOP A LPCI SHROUD ATTACHMENT RING WELD N/A N/A 305-006-124	X-A X8.30	EVT-1	1Q800-03-018	SAT	None.

ID of Component Examined Description of Component Size - Sched. - ISI Dwg. No.	ASME Category ASME Item No.	Exam Method	Exam Report No.	Status	Remarks
1B13-SHSAM SHROUD HEAD STUD ASY MOD LOCKING PINS N/A N/A 305-006-101	X-A X6.14	VT-3	1Q800-03-077	UNSAT	Exam found severe wear on the retainer pins of SHSAMs 2 and 8. Under CR 03-02831 the wear was evaluated as acceptable for continued operation.
1B13-SRM-16/45 SRM INSTRUMENT DRY TUBE A N/A N/A 305-006-117	X-A X2.10	VT-3	1Q800-03-078	SAT	Examined from two opposing quadrants to achieve full coverage.
1B13-SRM-40/21 SRM INSTRUMENT DRY TUBE C N/A N/A 305-006-117	X-A X2.10	VT-3	1Q800-03-078	SAT	Examined from two opposing quadrants to achieve full coverage.
1B21-0131 @ 26" PIPE TO 28" PIPE 26" 1.321" 305-605-107	X-B X10.10	UT	0944-03-E050	NRI	ID geometry observed below recordable levels.
1B21-0168-B HEAD VENT/POOL FLOOR FLANGE CONNECTION BOLTING 2" 160 305-605-106	B-G-2 B7.50	VT-1	1042-03-0038	SAT	Examined 8 studs and 16 nuts after head spray reassembly.
1B21-0186-B RPV UPPER HEAD SPRAY NOZZLE FLANGE BOLTING 4" N/A 305-605-105	B-G-2 B7.50	VT-1	1042-03-0039	SAT	Examined 8 studs and 16 nuts after head spray piping reassembly. See report 1042-03-0033 for replacement bolting exams.
1B21-0186-B RPV UPPER HEAD SPRAY NOZZLE FLANGE BOLTING 4" N/A 305-605-105	B-G-2 B7.50	VT-1	1042-03-0033	SAT	Examined 1 new stud and 2 new nuts.
1B21-F0022C-IS 26" GLOBE, MSIV,INTERNAL SURFACE (GROUPING NO. II) 26" N/A 305-605-103	B-M-2 B12.50	VT2	1042-03-0042	SAT	Examined valve internal surfaces upon disassembly due to LLRT failure.
1B21-F041B-B SRV BOLTING, 12 EACH 10" N/A 305-605-102	B-G-2 B7.50	VT-1	1042-03-0021	SAT	Examined 12 existing inlet flange nuts of replacement vavle serial no. 160848.
1B21-F041B-B SRV BOLTING, 12 EACH 10" N/A 305-605-102	B-G-2 B7.50	VT-1	1042-03-0010	SAT	Examined 10 existing and 2 new inlet flange studs of replacement vavle serial no. 160848.

ID of Component Examined Description of Component Size - Sched. - ISI Dwg. No.	ASME Category ASME Item No.	Exam Method	Exam Report No.	Status	Remarks
1B21-F041C-B SRV BOLTING, 12 EACH 10" N/A 305-605-103	B-G-2 B7.50	VT-1	1042-03-0007	SAT	Examined 11 existing and 1 new inlet flange stud of replacement vavle serial no. 160866.
1B21-F041C-B SRV BOLTING, 12 EACH 10" N/A 305-605-103	B-G-2 B7.50	VT-1	1042-03-0014	SAT	Examined 12 existing nuts.
1B21-F041C-B SRV BOLTING, 12 EACH 10" N/A 305-605-103	B-G-2 B7.50	VT-1	1042-03-0025	SAT	Examined 12 new inlet flange washers for replacement valve serial no. 160866.
1B21-F041D-B SRV BOLTING, 12 EACH 10" N/A 305-605-104	B-G-2 B7.50	VT-1	1042-03-0002	SAT	Examined 10 existing and 2 new inlet flange studs of replacement valve serial no. 160886.
1B21-F041D-B SRV BOLTING, 12 EACH 10" N/A 305-605-104	B-G-2 B7.50	VT-1	1042-03-0020	SAT	Examined 12 existing inlet flange nuts of replacement valve serial no. 160886.
1B21-F041F-B SRV BOLTING, 12 EACH 10" N/A 305-605-102	B-G-2 B7.50	VT-1	1042-03-0019	SAT	Examined 12 existing inlet flange nuts of replacement valve serial no. 160889.
1B21-F041F-B SRV BOLTING, 12 EACH 10" N/A 305-605-102	B-G-2 B7.50	VT-1	1042-03-0009	SAT	Examined 12 existing inlet flange studs of replacement valve serial no. 160889.
1B21-F041K-B SRV BOLTING, 12 EACH 10" N/A 305-605-102	B-G-2 B7.50	VT-1	1042-03-0018	SAT	Examined 12 existing inlet flange nuts of replacement valve serial no. 160869.
1B21-F041K-B SRV BOLTING, 12 EACH 10" N/A 305-605-102	B-G-2 B7.50	VT-1	1042-03-0006	SAT	Examined 11 existing and 1 new inlet flange stud of replacement valve serial no. 160869.
1B21-F047B-B SRV BOLTING, 12 EACH 10" N/A 305-605-102	B-G-2 B7.50	VT-1	1042-03-0004	SAT	Examined 12 existing inlet flange studs of replacement valve serial no. 160891.

ID of Component Examined Description of Component Size - Sched. - ISI Dwg. No.	ASME Category ASME Item No.	Exam Method	Exam Report No.	Status	Remarks
1B21-F047B-B SRV BOLTING, 12 EACH 10" N/A 305-605-102	B-G-2 B7.50	VT-1	1042-03-0017	SAT	Examined 12 existing inlet flange nuts of replacement valve serial no. 160891.
1B21-F047B-B SRV BOLTING, 12 EACH 10" N/A 305-605-102	B-G-2 B7.50	VT-1	1042-03-0026	SAT	Examined 12 new inlet flange washers for replacement valve serial no. 160891.
1B21-F047D-B SRV BOLTING, 12 EACH 10" N/A 305-605-104	B-G-2 B7.50	VT-1	1042-03-0003	SAT	Examined 12 existing inlet flange studs of replacement valve serial no. 160896.
1B21-F047D-B SRV BOLTING, 12 EACH 10" N/A 305-605-104	B-G-2 B7.50	VT-1	1042-03-0016	SAT	Examined 12 existing inlet flange nuts of replacement valve serial no. 160896.
1B21-F047F-B SRV BOLTING, 12 EACH 10" N/A 305-605-102	B-G-2 B7.50	VT-1	1042-03-0005	SAT	Examined 9 existing and 3 new inlet flange studs of replacement valve serial no. 160873.
1B21-F047F-B SRV BOLTING, 12 EACH 10" N/A 305-605-102	B-G-2 B7.50	VT-1	1042-03-0015	SAT	Examined 12 existing inlet flange nuts of replacement valve serial no. 160873.
1B21-F047H-B SRV BOLTING, 12 EACH 10" N/A 305-605-104	B-G-2 B7.50	VT-1	1042-03-0023	SAT	Examined 12 existing inlet flange nuts of replacement valve serial no. 160870.
1B21-F047H-B SRV BOLTING, 12 EACH 10" N/A 305-605-104	B-G-2 B7.50	VT-1	1042-03-0008	SAT	Examined 12 new inlet flange studs of replacement valve serial no. 160870.
1B21-F051B-B SRV BOLTING, 12 EACH 10" N/A 305-605-102	B-G-2 B7.50	VT-1	1042-03-0012	SAT	Examined 9 existing and 3 new inlet flange studs of replacement valve serial no. 160860.
1B21-F051B-B SRV BOLTING, 12 EACH 10" N/A 305-605-102	B-G-2 B7.50	VT-1	1042-03-0022	SAT	Examined 12 existing inlet flange nuts of replacement valve serial no. 160860.

ID of Component Examined Description of Component Size - Sched. - ISI Dwg. No.	ASME Category ASME Item No.	Exam Method	Exam Report No.	Status	Remarks
1B21-F051D-B SRV BOLTING, 12 EACH 10" N/A 305-605-104	B-G-2 B7.50	VT-1	1042-03-0011	SAT	Examined 11 existing and 1 new inlet flange stud of replacement valve serial no. 160857.
1B21-F051D-B SRV BOLTING, 12 EACH 10" N/A 305-605-104	B-G-2 B7.50	VT-1	1042-03-0013	SAT	Examined 12 existing inlet flange nuts of replacement valve serial no. 160857.
1B21-G101A RIGID GUIDE (WA) MPL 1B21G7030 26" N/A 305-605-101	F-A F1.G	VT-3	1042-03A-030	SAT	None.
1B21-H0020 MECHANICAL SNUBBER (WA) (TANDEM) 10" N/A 305-605-125	F-A F3.SN	VT-3	VT-03-0245/6	SAT	None.
1B21-H0020-WA INTEGRAL ATTACHMENT MECHANICAL SNUBBER 10" N/A 305-605-125	D-Ac D1.20	VT-3	1042-03A-023	SAT	None.
1B21-H0121 ANCHOR (WA) 10" N/A 305-605-129	F-A F3.A	VT-3	1042-03A-020	SAT	None.
1B21-H0121-WA INTEGRAL ATTACHMENT ANCHOR 10" N/A 305-605-129	D-Ac D1.20	VT-3	1042-03A-021	SAT	None.
1B21-H0126 MECHANICAL SNUBBER 14" N/A 305-605-129	F-A F3.SN	VT-3	VT-03-0491	SAT	None.
1B21-H0220 RIGID STRUT (WA) 10" N/A 305-605-118	F-A F3.STm	VT-3	1042-03A-031	SAT	None.
1B21-H0220-WA INTEGRAL ATTACHMENT RIGID STRUT 10" N/A 305-605-118	D-Ac D1.20	VT-3	1042-03A-032	SAT	None.

ID of Component Examined Description of Component Size - Sched. - ISI Dwg. No.	ASME Category ASME Item No.	Exam Method	Exam Report No.	Status	Remarks
1B21-P122-WA @ P122 FLUED HD FITTING TO PROCESS PIPE ATTACH WELD 26" 80 305-605-109	X-E X10.20	UT	0944-03-E055	IND	45 degree shear wave examination. Previously recorded indications observed at similar amplitude sweep positions and metal paths.
1B21-P122-WA @ P122 FLUED HD FITTING TO PROCESS PIPE ATTACH WELD 26" 80 305-605-109	X-E X10.20	UT	0944-03-E056	SAT	25 longitudinal wave examination.
1B21-P122-WA @ P122 FLUED HD FITTING TO PROCESS PIPE ATTACH WELD 26" 80 305-605-109	X-E X10.20	UT	0944-03-E054	IND	0 degree examination. Previously recorded indications observed at similar amplitude sweep positions and metal paths.
1B21-QUE-04-SP ANCHOR FOR QUENCHER FOR SRV F041D (WA) N/A N/A 305-605-118	F-A F3.A	VT-3	1042-03A-034	SAT	None.
1B21-QUE-04-WA INTEGRAL ATTACHMENT QUENCHER ANCHOR, F041D N/A N/A 305-605-118	D-Ac D1.20	VT-3	1042-03A-033	SAT	None.
1B33-0003 22" PIPE TO ELBOW 22" .948" 305-602-102	R-A R3.ND	UT	0944-03-E047	NRI	ID geometry observed below recordable levels.
1B33-0003-D1 ELBOW SHORT SEAM, DOWNSTREAM 22" .898" 305-602-102	R-A R3.LS	UT	1Q800-03-012	NRI	Intersecting portions of longseam examined with circumferential weld 1B33-0003A. Reference Report No: 0944-03-E047.
1B33-0003-D2 ELBOW LONG SEAM, DOWNSTREAM 22" .898" 305-602-102	R-A R3.LS	UT	1Q800-03-013	NRI	Intersecting portions of longseam examined with circumferential weld 1B33-0003A. Reference Report No: 0944-03-E047.
1B33-0003-U PIPE SEAM, UPSTREAM 22" .948" 305-602-102	R-A R3.LS	UT	1Q800-03-014	NRI	Intersecting portions of longseam examined with circumferential weld 1B33-0003A. Reference Report No: 0944-03-E047.
1B33-0003A 22" ELBOW TO PIPE 22" .948" 305-602-102	R-A R3.ND	UT	0944-03-E038	NRI	ID geometry observed below recordable levels.

ID of Component Examined Description of Component Size - Sched. - ISI Dwg. No.	ASME Category ASME Item No.	Exam Method	Exam Report No.	Status	Remarks
1B33-0003A-D PIPE SEAM, DOWNSTREAM 22" .948" 305-602-102	R-A R3.LS	UT	1Q800-03-009	NRI	Intersecting portions of longseam examined with circumferential weld 1B33-0003A. Reference Report No: 0944-03-E038.
1B33-0003A-U1 ELBOW SHORT SEAM, UPSTREAM 22" .898" 305-602-102	R-A R3.LS	UT	1Q800-03-010	NRI	Intersecting portions of longseam examined with circumferential weld 1B33-0003A. Reference Report No: 0944-03-E038.
1B33-0003A-U2 ELBOW LONG SEAM, UPSTREAM 22" .898" 305-602-102	R-A R3.LS	UT	1Q800-03-011	NRI	Intersecting portions of longseam examined with circumferential weld 1B33-0003A. Reference Report No: 0944-03-E038.
1B33-0010-B BLANK FLANGE DECON CONNECTOR 4" N/A 305-602-102	B-G-2 B7.50	VT-1	1042-03A-017	SAT	None.
1B33-0020 24" PIPE TO ELBOW 24" 1.346" 305-602-102	R-A R3.ND	UT	0944-03-E020	NRI	Previously recorded geometry noted and verified per NDE-018. Max amp. below recordable levels.
1B33-0020-D1 ELBOW SHORT SEAM 24" 1.556" 305-602-102	R-A R3.LS	UT	1Q800-03-001	NRI	Intersecting portions of longseam examined with circumferential weld 1B33-0020. Reference Report No: 0944-03-E020.
1B33-0020-D2 ELBOW LONG SEAM 24" 1.556" 305-602-102	R-A R3.LS	UT	1Q800-03-002	NRI	Intersecting portions of longseam examined with circumferential weld 1B33-0020. Reference Report No: 0944-03-E020.
1B33-0020-U PIPE SEAM, UPSTREAM 24" 1.346" 305-602-102	R-A R3.LS	UT	1Q800-03-003	NRI	Intersecting portions of longseam examined with circumferential weld 1B33-0020. Reference Report No: 0944-03-E020.
1B33-0021 24" ELBOW TO PIPE 24" 1.346" 305-602-102	R-A R3.ND	UT	0944-03-E021	NRI	Previously recorded geometry noted and verified per NDE-018. Max amp. below recordable levels.
1B33-0021-D PIPE SEAM, DOWNSTREAM 24" 1.346" 305-602-102	R-A R3.LS	UT	1Q800-03-004	NRI	Intersecting portions of longseam examined with circumferential weld 1B33-0021. Reference Report No: 0944-03-E021.

ID of Component Examined Description of Component Size - Sched. - ISI Dwg. No.	ASME Category ASME Item No.	Exam Method	Exam Report No.	Status	Remarks
1B33-0021-U1 ELBOW SHORT SEAM 24" 1.556" 305-602-102	R-A R3.LS	UT	1Q800-03-005	NRI	Intersecting portions of longseam examined with circumferential weld 1B33-0021. Reference Report No: 0944-03-E021.
1B33-0021-U2 ELBOW LONG SEAM 24" 1.556" 305-602-102	R-A R3.LS	UT	1Q800-03-006	NRI	Intersecting portions of longseam examined with circumferential weld 1B33-0021. Reference Report No: 0944-03-E021.
1B33-0056 16" X 12" SWEEPOLET TO 12" PIPE (CRC) 12" .575" 305-602-101	R-A R3.ND	UT	0944-03-E041	NRI	Previously recorded geometry noted and verified per NDE-017. Max amp. below recordable levels.
1B33-0056-D PIPE SEAM, DOWNSTREAM 12" .575" 305-602-101	R-A R3.LS	UT	1Q800-03-086	NRI	Intersecting portions of longseam examined with circumferential weld 1B33-0003A. Reference Report No: 0944-03-E041.
1B33-0057 12" PIPE TO ELBOW 12" .575" 305-602-101	R-A R3.ND	UT	0944-03-E039	NRI	Previously recorded geometry noted and verified per NDE-018. Max amp. below recordable levels.
1B33-0057-D ELBOW SEAM, DOWNSTREAM 12" .575" 305-602-101	R-A R3.LS	UT	1Q800-03-007	NRI	Intersecting portions of longseam examined with circumferential weld 1B33-0057. Reference Report No: 0944-03-E039.
1B33-0057-U PIPE SEAM, UPSTREAM 12" .575" 305-602-101	R-A R3.LS	UT	1Q800-03-008	NRI	Intersecting portions of longseam examined with circumferential weld 1B33-0057. Reference Report No: 0944-03-E039.
1B33-B302A RIGID STRUT, PUMP, MPL 1B33G7001A N/A N/A 305-602-102	F-A F4.0	VT-3	1042-03A-025	SAT	None.
1B33-H0004 RIGID GUIDE 2" N/A 305-671-101	F-A F1.G	VT-3	1042-03A-016	SAT	None.
1B33-S370A HYDRAULIC SNUBBER, PUMP MOTOR, MPL 1B33G7065A N/A N/A 305-602-102	F-A F4.0	VT-3	VT-03-0190	SAT	None.

ID of Component Examined Description of Component Size - Sched. - ISI Dwg. No.	ASME Category ASME Item No.	Exam Method	Exam Report No.	Status	Remarks
1B33-S374A HYDRAULIC SNUBBER, PUMP (WA), MPL 1B33G7069A N/A N/A 305-602-102	F-A F4.0	VT-3	VT-03-0280	SAT	None.
1B33-S375A HYDRAULIC SNUBBER, PUMP (WA) MPL 1B33G7070A N/A N/A 305-602-102	F-A F4.0	VT-3	VT-03-0279	SAT	None.
1B33-S375A HYDRAULIC SNUBBER, PUMP (WA) MPL 1B33G7070A N/A N/A 305-602-102	F-A F4.0	VT-3	VT-03-0581	SAT	None.
1C11-0003 8" ELBOW TO TEE 8" 100 305-871-103	C-F-2 C5.51	MT	0942-03A-023	SAT	None.
1C11-0003 8" ELBOW TO TEE 8" 100 305-871-103	C-F-2 C5.51	UT	0944-03-E022	NRI	Previously recorded geometry noted and verified per NDE-008. Max amp. below recordable levels.
1C11-0007 12" PIPE TO CAP 12" 100 305-871-103	C-F-2 C5.51	UT	0944-03-E024	NRI	ID geometry observed below recordable levels.
1C11-0007 12" PIPE TO CAP 12" 100 305-871-103	C-F-2 C5.51	MT	0942-03A-025	SAT	None.
1C11-0030 8" CAP TO PIPE 8" 100 305-871-104	C-F-2 C5.51	MT	0942-03A-024	SAT	None.
1C11-0030 8" CAP TO PIPE 8" 100 305-871-104	C-F-2 C5.51	UT	0944-03-E023	GEO	Previously recorded geometry noted and verified per NDE-008 with no significant changes.
1C11-0084 2 1/2" ELBOW TO PIPE 2-1/2" 80 305-871-105	X-B X10.11	PT	0941-03A-003	SAT	None.

ID of Component Examined Description of Component Size - Sched. - ISI Dwg. No.	ASME Category ASME Item No.	Exam Method	Exam Report No.	Status	Remarks
1C11-0086 2 1/2" ELBOW TO PIPE 2-1/2" 80 305-871-105	X-B X10.11	PT	0941-03A-002	SAT	None.
1C11-0092 2 1/2" PIPE TO ELBOW 2-1/2" 80 305-871-105	X-B X10.11	PT	0941-03A-001	SAT	None.
1C11-H0052 RIGID GUIDE (WA) 8" N/A 305-871-101	F-A F2.G	VT-3	1042-03A-018	SAT	None.
1C11-H0634 RIGID STRUT (AUGMENTED HEPIBER) 2-1/2" N/A 305-871-105	F-A F5.0	VT-3	1042-03A-013	SAT	None.
1C11-H0673 MECHANICAL SNUBBER 8" N/A 305-871-101	F-A F2.SN	VT-3	VT-03-0114	SAT	None.
1C11-H0695 RIGID ANCHOR (AUGMENTED HEPIBER) 2-1/2" N/A 305-871-105	F-A F5.0	VT-3	1042-03A-014	SAT	None.
1C11-H5161 RIGID GUIDE (AUGMENTED HEPIBER) 2-1/2" N/A 305-871-105	F-A F5.0	VT-3	1042-03A-015	SAT	None.
1E12-0064C 24" PIPE TO FLANGE 24" 40 305-642-111	C-F-2 C5.51	UT	0944-03-E002	NRI	None.
1E12-0064C 24" PIPE TO FLANGE 24" 40 305-642-111	C-F-2 C5.51	MT	0942-03A-009	SAT	None.
1E12-0082 24" X 24" X 18" TEE TO 18" PIPE 18" 40 305-642-114	C-F-2 C5.51	MT	0942-03A-010	SAT	None.

ID of Component Examined Description of Component Size - Sched. - ISI Dwg. No.	ASME Category ASME Item No.	Exam Method	Exam Report No.	Status	Remarks
1E12-0082 24" X 24" X 18" TEE TO 18" PIPE 18" 40 305-642-114	C-F-2 C5.51	UT	0944-03-E003	NRI	Previously recorded geometry noted and verified per NDE-008. Max amp. below recordable levels.
1E12-0090 24" PIPE TO ELBOW 24" 40 305-642-114	C-F-2 C5.51	MT	0942-03A-017	SAT	None.
1E12-0090 24" PIPE TO ELBOW 24" 40 305-642-114	C-F-2 C5.51	UT	0944-03-E011	NRI	None.
1E12-0192 20" HT. EXCH. B001B OUTLET NOZZLE TO ELBOW 20" 40 305-643-106	C-F-2 C5.51	MT	0942-03A-021	SAT	None.
1E12-0192 20" HT. EXCH. B001B OUTLET NOZZLE TO ELBOW 20" 40 305-643-106	C-F-2 C5.51	UT	0944-03-E015	NRI	Previously recorded geometry noted and verified per NDE-008. Max amp. below recordable levels.
1E12-0206 18" FLANGE TO PIPE 18" 40 305-643-115	C-F-2 C5.51	MT	0942-03A-005	NRI	None.
1E12-0206 18" FLANGE TO PIPE 18" 40 305-643-115	C-F-2 C5.51	UT	0944-03-E001	NRI	Previously recorded geometry noted and verified per NDE-008. Max amp. below recordable levels.
1E12-0217 18" PIPE TO ELBOW 18" 40 305-643-117	C-F-2 C5.51	UT	0944-03-E004	GEO	Previously recorded geometry noted and verified per NDE-008 with no significant changes.
1E12-0217 18" PIPE TO ELBOW 18" 40 305-643-117	C-F-2 C5.51	MT	0942-03A-011	SAT	None.
1E12-0579 12" PIPE TO VALVE F053B 12" 40 305-642-132	C-F-2 C5.51	UT	0944-03-E008	NRI	None.

ID of Component Examined Description of Component Size - Sched. - ISI Dwg. No.	ASME Category ASME Item No.	Exam Method	Exam Report No.	Status	Remarks
1E12-0579 12" PIPE TO VALVE F053B 12" 40 305-642-132	C-F-2 C5.51	MT	0942-03A-014	SAT	None.
1E12-0579 12" PIPE TO VALVE F053B 12" 40 305-642-132	C-F-2 C5.51	UT	0944-03-E007	NRI	Previously recorded geometry noted and verified per NDE-008. Max amp. below recordable levels.
1E12-0581 @ 12" PIPE TO ELBOW 12" 100 305-642-132	X-B X10.10	UT	0944-03-E049	GEO	Previously recorded geometry noted and verified per NDE-008 with no significant changes.
1E12-0639 18" PIPE TO PENETRATION P407 18" STD 305-643-109	C-F-2 C5.51	MT	0942-03A-012	SAT	None.
1E12-0639 18" PIPE TO PENETRATION P407 18" STD 305-643-109	C-F-2 C5.51	UT	0944-03-E005	NRI	Previously recorded geometry noted and verified per NDE-008. Max amp. below recordable levels.
1E12-0690 12" PENETRATION P412 PROCESS PIPE TO PIPE 12" 40 305-642-137	C-F-2 C5.51	MT	0942-03A-026	SAT	None.
1E12-0690 12" PENETRATION P412 PROCESS PIPE TO PIPE 12" 40 305-642-137	C-F-2 C5.51	UT	0944-03-E027	GEO	Previously recorded geometry noted and verified per NDE-008 with no significant changes.
1E12-0756 18" PIPE TO ELBOW 18" 40 305-643-104	C-F-2 C5.51	UT	0944-03-E012	NRI	Previously recorded geometry noted and verified per NDE-008. Max amp. below recordable levels.
1E12-0756 18" PIPE TO ELBOW 18" 40 305-643-104	C-F-2 C5.51	MT	0942-03A-020	SAT	None.
1E12-0846 18" ELBOW TO PIPE 18" 40 305-643-120	C-F-2 C5.51	UT	0944-03-E009	NRI	Previously recorded geometry noted and verified per NDE-008. Max amp. below recordable levels.

ID of Component Examined Description of Component Size - Sched. - ISI Dwg. No.	ASME Category ASME Item No.	Exam Method	Exam Report No.	Status	Remarks
1E12-0846 18" ELBOW TO PIPE 18" 40 305-643-120	C-F-2 C5.51	MT	0942-03A-015	SAT	None.
1E12-0854 12" ELBOW TO ELBOW 12" 80 305-642-134	R-A R2.ND	UT	0944-03-E016	NRI	Previously recorded geometry noted and verified per NDE-008. Max amp. below recordable levels.
1E12-0858 12" PIPE TO ELBOW 12" 80 305-642-135	R-A R2.ND	UT	0944-03-E025	NRI	Previously recorded geometry noted and verified per NDE-008. Max amp. below recordable levels.
1E12-0859 12" ELBOW TO PIPE 12" 80 305-642-135	R-A R2.ND	UT	0944-03-E026	NRI	ID geometry observed below recordable levels.
1E12-0874 12" ELBOW TO PIPE 12" 80 305-642-143	R-A R2.ND	UT	0944-03-E048	NRI	ID geometry observed below recordable levels.
1E12-C002C-006 24" SUCTION FLANGE TO 24" SUCTION PIPE N/A N/A 305-643-122	C-G C6.10	MT	0942-03A-004	SAT	None.
1E12-C002C-007 18" DISCHARGE PIPE TO HEAD SHELL N/A N/A 305-643-122	C-G C6.10	MT	0942-03A-008	SAT	None.
1E12-C002C-008 24" SUCTION PIPE TO HEAD SHELL N/A N/A 305-643-122	C-G C6.10	MT	0942-03A-007	SAT	None.
1E12-C002C-011 24" SUCTION PIPE LONGSEAM N/A N/A 305-643-122	C-G C6.10	MT	0942-03A-006	SAT	None.
1E12-H0004 MECHANICAL SNUBBER 12" N/A 305-642-141	F-A F1.SN	VT-3	VT-03-0671	SAT	None.

ID of Component Examined Description of Component Size - Sched. - ISI Dwg. No.	ASME Category ASME Item No.	Exam Method	Exam Report No.	Status	Remarks
1E12-H0050 RIGID ROD 12" N/A 305-642-139	F-A F1.R	VT-3	1042-03A-028	SAT	None.
1E12-H0120 ANCHOR (WA) 12" N/A 305-643-110	F-A F2.A	VT-3	1042-03A-012	SAT	None.
1E12-H0120-WA PIPING SUPPORT WELDED ATTACHMENT 12" N/A 305-643-110	C-Cc C3.20	MT	0942-03A-019	SAT	None.
1E12-H0138 VARIABLE SPRING 18" N/A 305-643-115	F-A F2.SP	VT-3	1042-03A-001	SAT	None.
1E12-H0143 RIGID STRUT (WA) 6" N/A 305-643-116	F-A F2.ST	VT-3	1042-03A-002	SAT	None.
1E12-H0170 HYDRAULIC SNUBBER 24" N/A 305-642-111	F-A F2.SN	VT-3	VT-03-0094	SAT	None.
1E12-H0187 RIGID GUIDE (WA) 18" N/A 305-643-101	F-A F2.G	VT-3	1042-03A-010	SAT	None.
1E12-H0187-WA PIPING SUPPORT WELDED ATTACHMENT 18" N/A 305-643-101	C-Cc C3.20	MT	0942-03A-018	SAT	None.
1E12-H0372-WA PIPING SUPPORT WELDED ATTACHMENT 18" N/A 305-642-113	C-Cc C3.20	MT	0942-03A-003	SAT	None.
1E12-H0409 VARIABLE SPRING 12" N/A 305-642-134	F-A F1.SP	VT-3	1042-03A-011	SAT	None.

ID of Component Examined Description of Component Size - Sched. - ISI Dwg. No.	ASME Category ASME Item No.	Exam Method	Exam Report No.	Status	Remarks
1E12-H0416 MECHANICAL SNUBBER 12" N/A 305-642-134	F-A F1.SN	VT-3	VT-03-0092	SAT	None.
1E12-H0421 MECHANICAL SNUBBER 6" N/A 305-643-120	F-A F2.SN	VT-3	VT-03-0096	SAT	None.
1E12-H0426 VARIABLE SPRING 18" N/A 305-643-120	F-A F2.SP	VT-3	1042-03A-009	SAT	Exam found loose locknut which was corrected in accordance with Work Request No. 03-000809.
1E12-H0561 MECHANICAL SNUBBER 12" N/A 305-642-136	F-A F2.SN	VT-3	VT-03-0093	SAT	None.
1E12-H0562 RIGID STRUT (WA < .75" T) 18" N/A 305-643-110	F-A F2.ST	VT-3	1042-03A-003	SAT	None.
1E12-H0652 MECHANICAL SNUBBER 12" N/A 305-642-137	F-A F1.SN	VT-3	VT-03-0113	SAT	None.
1E12-H0709 VARIABLE SPRING 6" N/A 305-643-116	F-A F2.SP	VT-3	1042-03A-004	SAT	None.
1E12-H0710 MECHANICAL SNUBBER 8" N/A 305-642-111	F-A F2.SN	VT-3	VT-03-0095	SAT	None.
1E12-H0747 MECHANICAL SNUBBER 12" N/A 305-642-132	F-A F2.SN	VT-3	VT-03-0045	SAT	None.
1E12-H0765 MECHANICAL SNUBBER 12" N/A 305-642-145	F-A F1.SN	VT-3	VT-03-0375	SAT	None.

ID of Component Examined Description of Component Size - Sched. - ISI Dwg. No.	ASME Category ASME Item No.	Exam Method	Exam Report No.	Status	Remarks
1E12-H6000 RIGID GUIDE 6" N/A 305-643-116	F-A F2.Gs	VT-3	1042-03A-005	SAT	None.
1E12-PRB2035-SP ANCHOR, PEN TO DRYWELL (WA) 12" N/A 305-642-143	F-A F1.A	VT-3	1042-03A-026	SAT	None.
1E12-PRB2035-WA PRB2035 FLUED HD FITTING TO PROCESS PIPE ATTACH WD 12" N/A 305-642-143	B-Kc B10.20	MT	0942-03A-027	SAT	None.
1E51-0001-B 6" FLANGE BOLTING 6" N/A 305-631-108	B-G-2 B7.50	VT-1	1042-03-0040	SAT	Examined 12 studs and 24 nuts after head spray piping reassembly. See report 1042-03-0034 for replacement bolting exams.
1E51-0001-B 6" FLANGE BOLTING 6" N/A 305-631-108	B-G-2 B7.50	VT-1	1042-03-0034	SAT	Examined 6 new studs and 10 new nuts.
1E51-0009-B 6" FLANGE BOLTING 6" N/A 305-631-108	B-G-2 B7.50	VT-1	1042-03-0041	SAT	Examined 12 studs and 24 nuts after head spray piping reassembly. See report 1042-03-0035 for replacement bolting exams.
1E51-0024 6" ELBOW TO PIPE 6" 80 305-631-106	R-A R2.11	UT	0944-03-E045	NRI	ID geometry observed below recordable levels.
1E51-0025 6" PIPE TO ELBOW 6" 80 305-631-106	R-A R2.11	UT	0944-03-E046	NRI	ID geometry observed below recordable levels.
1E51-0029 6" PIPE TO ELBOW 6" 80 305-631-105	R-A R1.11	UT	0944-03-E014	NRI	Previously recorded geometry noted and verified per NDE-008. Max amp. below recordable levels.
1E51-0029A 6" TEE TO PIPE 6" 80 305-631-105	R-A R1.11	UT	0944-03-E013	NRI	None.

ID of Component Examined Description of Component Size - Sched. - ISI Dwg. No.	ASME Category ASME Item No.	Exam Method	Exam Report No.	Status	Remarks
1E51-0034 6" ELBOW TO PIPE 6" 120 305-631-103	C-F-2 C5.51	MT	0942-03A-016	SAT	None.
1E51-0034 6" ELBOW TO PIPE 6" 120 305-631-103	C-F-2 C5.51	UT	0944-03-E010	NRI	Previously recorded geometry noted and verified per NDE-008. Max amp. below recordable levels.
1E51-0099 12" PIPE TO TEE 12" STD 305-632-103	C-F-2 C5.51	MT	0942-03A-013	SAT	None.
1E51-0099 12" PIPE TO TEE 12" STD 305-632-103	C-F-2 C5.51	UT	0944-03-E006	NRI	None.
1E51-0121 10" P422 PROCESS PIPE TO PIPE 10" 80 305-632-102	R-A R2.ND	UT	0944-03-E040	GEO	Previously recorded geometry verified per NDE-008 with no significant changes.
1E51-0124 @ 10" PIPE TO VALVE F063 10" 80 305-632-101	X-B X10.10	UT	0944-03-E057	NRI	Previously recorded geometry noted and verified per NDE-008. Max amp. below recordable levels.
1E51-C001-001 RCIC PUMP CASING TO DISCHARGE FLANGE 6" N/A 305-631-109	C-G C6.10	MT	0942-03A-001	SAT	None.
1E51-C001-004 6" ELBOW TO FLANGE 6" N/A 305-631-109	C-G C6.10	MT	0942-03A-002	SAT	None.
1E51-H0039 RIGID STRUT 6" N/A 305-631-106	F-A F1.ST	VT-3	1042-03A-024	SAT	None.
1E51-H0040 VARIABLE SPRING 6" N/A 305-631-105	F-A F1.SP	VT-3	1042-03A-006	SAT	None.

ID of Component Examined Description of Component Size - Sched. - ISI Dwg. No.	ASME Category ASME Item No.	Exam Method	Exam Report No.	Status	Remarks
1E51-H0076 RIGID GUIDE 6" N/A 305-631-107	F-A F1.G	VT-3	1042-03A-022	SAT	None.
1E51-H0131 RIGID GUIDE 12" N/A 305-632-103	F-A F2.G	VT-3	1042-03A-007	SAT	None.
1E51-H0137 RIGID STRUT 6" N/A 305-631-105	F-A F2.ST	VT-3	1042-03A-008	SAT	None.
1G33-0115 6" PENE. P132 PROCESS PIPE TO VALVE F039 6" 120 305-672-102	C-F-2 C5.51	MT	0942-03A-022	SAT	
1G33-0115 6" PENE. P132 PROCESS PIPE TO VALVE F039 6" 120 305-672-102	C-F-2 C5.51	UT	0944-03-E017	NRI	
1G33-0116 @ 6" VALVE F039 TO PIPE 6" 120 305-672-102	X-B X10.10	UT	0944-03-E018	NRI	Previously recorded geometry noted and verified per NDE-008. Max amp. below recordable levels.
1G33-0117 @ 6" PIPE TO FLANGE FE N040 6" 120 305-672-102	X-B X10.10	UT	0944-03-E019	NRI	ID geometry observed below recordable levels.
1G33-0123 @ 6" VALVE F051A TO PIPE 6" 120 305-672-101	X-B X10.10	UT	0944-03-E031	GEO	Previously recorded geometry noted and verified per NDE-008 with no significant changes.
1G33-0124 @ 6" PIPE TO ELBOW 6" 120 305-672-101	X-B X10.10	UT	0944-03-E030	NRI	Previously recorded geometry noted and verified per NDE-008. Max amp. below recordable levels.
1G33-0125 @ 6" ELBOW TO PIPE 6" 120 305-672-101	X-B X10.10	UT	0944-03-E029	NRI	Previously recorded geometry noted and verified per NDE-008. Max amp. below recordable levels.

ID of Component Examined Description of Component Size - Sched. - ISI Dwg. No.	ASME Category ASME Item No.	Exam Method	Exam Report No.	Status	Remarks
1G33-0126 @ 6" PIPE TO VALVE F052A 6" 120 305-672-101	X-B X10.10	UT	0944-03-E033	NRI	ID geometry observed below recordable levels.
1G33-0126 @ 6" PIPE TO VALVE F052A 6" 120 305-672-101	X-B X10.10	UT	0944-03-E032	NRI	ID geometry observed below recordable levels.
1G33-0127 @ 6" VALVE F052A TO PIPE 6" 120 305-672-101	X-B X10.10	UT	0944-03-E036	NRI	Previously recorded geometry noted and verified per NDE-008. Max amp. below recordable levels.
1G33-0128 @ 6" PIPE TO ELBOW 6" 120 305-672-101	X-B X10.10	UT	0944-03-E034	NRI	Previously recorded geometry noted and verified per NDE-008. Max amp. below recordable levels.
1G33-0129 @ 6" ELBOW TO PIPE 6" 120 305-672-101	X-B X10.10	UT	0944-03-E035	NRI	Previously recorded geometry noted and verified per NDE-008. Max amp. below recordable levels.
1G33-0132A @ 6" PIPE TO PIPE 6" 120 305-672-101	X-B X10.10	UT	0944-03-E053	GEO	Previously recorded geometry noted and verified per NDE-008 with no significant changes.
1G33-0160 4" VALVE F028 TO 4" PIPE 4" 120 305-672-103	X-B X10.10	UT	0944-03-E037	NRI	ID geometry observed below recordable levels.
1G33-0161 4" PIPE TO VALVE F034 4" 120 305-672-103	X-B X10.10	UT	0944-03-E028	NRI	ID geometry observed below recordable levels.
1G33-H0144 MECHANICAL SNUBBER (AUGMENTED HEPIBER) 6" N/A 305-671-104	F-A F5.0	VT-3	VT-03-0616	SAT	None.
1G33-H0145 VARIABLE SPRING (AUGMENTED HEPIBER) 6" N/A 305-671-104	F-A F5.0	VT-3	1042-03A-019	SAT	None.

ID of Component Examined Description of Component Size - Sched. - ISI Dwg. No.	ASME Category ASME Item No.	Exam Method	Exam Report No.	Status	Remarks
1G33-H0215 MECHANICAL SNUBBER 6" N/A 305-672-102	F-A F2.SN	VT-3	VT-03-0361	SAT	None.
1N22-0028 @ 2" ELBOW TO PIPE 2" 160 305-121-102	X-B X10.11	MT	0942-03A-029	SAT	None.
1N22-0031 @ 2" PIPE TO ELBOW 2" 160 305-121-102	X-B X10.11	PT	0941-03A-008	SAT	None.
1N22-0031A @ 2" TEE TO PIPE 2" 160 305-121-102	X-B X10.11	PT	0941-03A-009	SAT	None.
1N22-0031B @ 2" PIPE TO TEE 2" 160 305-121-102	X-B X10.11	PT	0941-03A-010	SAT	None.
1N22-0031C @ 2" TEE TO COUPLING 2" 160 305-121-102	X-B X10.11	PT	0941-03A-011	SAT	None.
1N22-0036 @ 2" ELBOW TO PIPE 2" 160 305-121-102	X-B X10.11	PT	0941-03A-012	SAT	None.
1N22-0138 @ 2" ELBOW TO PIPE 2" 160 305-121-102	X-B X10.11	MT	0942-03A-030	SAT	None.
1N22-0139 @ 2" PIPE TO ELBOW 2" 160 305-121-102	X-B X10.11	MT	0942-03A-031	SAT	None.
1N22-0141 @ 2" PIPE TO ELBOW 2" 160 305-121-102	X-B X10.11	PT	0941-03A-013	SAT	None.

ID of Component Examined Description of Component Size - Sched. - ISI Dwg. No.	ASME Category ASME Item No.	Exam Method	Exam Report No.	Status	Remarks
1N22-0142 @ 2" ELBOW TO PIPE 2" 160 305-121-102	X-B X10.11	PT	0941-03A-014	SAT	None.
1N22-H0012 RIGID STRUT 2" N/A 305-121-102	F-A F1.ST	VT-3	1042-03A-029	SAT	None.
1N22-H0013 MECHANICAL SNUBBER 2" N/A 305-121-102	F-A F1.SN	VT-3	VT-03-0459	SAT	None.
1N27-0009 20" VALVE F032A TO PENE. P121 PROCESS PIPE 20" 80 305-082-101	R-A R1.11	UT	0944-03-E044	NRI	Previously recorded geometry noted and verified per NDE-008. Max amp. below recordable levels.
1N27-0010 @ 20" PIPE TO VALVE F032A 20" 80 305-082-101	X-B X10.10	UT	0944-03-E051	NRI	ID geometry observed below recordable levels.
1N27-0010A 20" PIPE TO PIPE 20" 80 305-082-101	C-F-2 C5.51	MT	0942-03A-028	SAT	None.
1N27-0010A 20" PIPE TO PIPE 20" 80 305-082-101	C-F-2 C5.51	UT	0944-03-E052	NRI	Previously recorded geometry noted and verified per NDE-008. Max amp. below recordable levels.
1N27-0013 @ 20" VALVE F065A TO PIPE 20" 120 305-082-101	X-B X10.10	UT	0944-03-E042	NRI	ID geometry observed below recordable levels.
1N27-0014 20" PIPE TO VALVE F065A 20" 120 305-082-101	X-B X10.10	UT	0944-03-E043	NRI	Previously recorded geometry noted and verified per NDE-008. Max amp. below recordable levels.
1N27-0086 1 1/2" CROSS TO 1 1/2" X 1" REDUCER 1-1/2" 6000 LB 305-971-101	X-B X10.11	PT	0941-03A-004	SAT	None.

ID of Component Examined Description of Component Size - Sched. - ISI Dwg. No.	ASME Category ASME Item No.	Exam Method	Exam Report No.	Status	Remarks
1N27-0087 1 1/2" CROSS TO 1 1/2" X 1" REDUCER 1-1/2" 6000 LB 305-971-101	X-B X10.11	PT	0941-03A-005	SAT	None.
1N27-0088 1 1/2" PIPE TO TEE 1-1/2" 160 305-971-101	X-B X10.11	PT	0941-03A-006	SAT	None.
1N27-0089 1 1/2" TEE TO 1 1/2" X 1" REDUCER 1-1/2" 6000LB 305-971-101	X-B X10.11	PT	0941-03A-007	SAT	None.
1N27-H0034 RIGID GUIDE (AUGMENTED HEPIBER) 20" N/A 305-082-101	F-A F5.0	VT-3	1042-03A-027	SAT	None.
1P42-H0171-WA INTEGRAL ATTACHMENT ANCHOR 10" N/A 305-621-107	D-Ac D1.20	VT-3	1042-02-0001	SAT	None.
1P42-H0231 RIGID STRUT 10" N/A 305-621-105	F-A F3.ST	VT-3	1042-02-0004	SAT	None.
1P45-H0044 RIGID GUIDE 14" N/A 305-792-116	F-A F3.G	VT-3	1042-03-0001	SAT	None.
1P45-H0094 RIGID GUIDE 24" N/A 305-791-111	F-A F3.G	VT-3	1042-02-0027	SAT	None.
1P45-H0368 RIGID GUIDE 16" N/A 305-792-110	F-A F3.G	VT-3	1042-02-0015	SAT	None.
1P45-H0506 RIGID GUIDE 8" N/A 305-792-114	F-A F3.G	VT-3	1042-02-0029	SAT	None.

ID of Component Examined Description of Component Size - Sched. - ISI Dwg. No.	ASME Category ASME Item No.	Exam Method	Exam Report No.	Status	Remarks
1P45-H0510 MECHANICAL SNUBBER (WA) 8" N/A 305-792-114	F-A F3.SN	VT-3	1042-02-0021	SAT	None.
1P45-H0510-WA INTEGRAL ATTACHMENT MECHANICAL SNUBBER 8" N/A 305-792-114	D-Ac D1.20	VT-3	1042-02-0022	SAT	None.
1P45-H0650 RIGID STRUT 14" N/A 305-791-113	F-A F3.ST	VT-3	1042-02-0028	SAT	None.
1P47-H0011 RIGID STRUT 10" N/A 305-002-101	F-A F3.ST	VT-3	1042-02-0020	SAT	None.
1P47-H0037 RIGID ROD 10" N/A 305-002-103	F-A F3.R	VT-3	1042-02-0023	SAT	None.
1P47-H0257 RIGID STRUT 10" N/A 305-002-110	F-A F3.STm	VT-3	1042-02-0024	SAT	None.
1P47-H0259 RIGID GUIDE 10" N/A 305-002-110	F-A F3.G	VT-3	1042-02-0025	SAT	None.
1P47-H0279 MECHANICAL SNUBBER (WA) 10" N/A 305-002-113	F-A F3.SN	VT-3	1042-02-0018	SAT	None.
1P47-H0279-WA INTEGRAL ATTACHMENT MECHANICAL SNUBBER 10" N/A 305-002-113	D-Ac D1.20	VT-3	1042-02-0019	SAT	None.
1P47-H0363 RIGID STRUT 6" N/A 305-002-112	F-A F3.ST	VT-3	1042-02-0026	SAT	None.

ID of Component Examined Description of Component Size - Sched. - ISI Dwg. No.	ASME Category ASME Item No.	Exam Method	Exam Report No.	Status	Remarks
0P49-D003A-SP ANCHOR, SCREEN WASH STRAINER (WA) N/A N/A 305-214-101	F-A F4.0	VT-3	1042-02-0017	SAT	None.
0P49-D003A-WA INTEGRAL ATTACHMENT SCREEN WASH STRAINER ANCHOR N/A N/A 305-214-101	D-Ac D1.10	VT-3	1042-02-0016	SAT	None.
1R44-A002A-SP ANCHOR, STARTING AIR RECEIVER TANK (WA) N/A N/A 305-351-103	F-A F4.0	VT-3	1042-02-0005	SAT	None.
1R45-A005-SP ANCHOR, HPCS FUEL OIL DAY TANK (WA) N/A N/A 305-356-101	F-A F4.0	VT-3	1042-02-0003	SAT	None.
1R48-H0013-WA INTEGRAL ATTACHMENT ANCHOR 24" N/A 305-355-102	D-Ac D1.20	VT-3	1042-02-0002	SAT	None.
1R48-H0047 RIGID SUPPORT (WA) 20" N/A 305-355-106	F-A F3.R	VT-3	1042-02-0007	SAT	None.
2P42-H0150 RIGID STRUT 10" N/A 305-623-104	F-A F3.ST	VT-3	1042-02-0006	SAT	None.
CLASS 1, PIPING PIPING-SYSTEM LEAKAGE TEST N/A N/A 305-NO-DWG	B-P B15.50	VT-2	1Q800-03-121	SAT	Exam completed by applicable ISI Pressure Testing Instructions.
CLASS 1, PUMPS PUMPS-SYSTEM LEAKAGE TEST N/A N/A 305-NO-DWG	B-P B15.60	VT-2	1Q800-03-122	SAT	Exam completed by applicable ISI Pressure Testing Instructions.
CLASS 1, VALVES VALVES-SYSTEM LEAKAGE TEST N/A N/A 305-NO-DWG	B-P B15.70	VT-2	1Q800-03-123	SAT	Exam completed by applicable ISI Pressure Testing Instructions.

ID of Component Examined Description of Component Size - Sched. - ISI Dwg. No.	ASME Category ASME Item No.	Exam Method	Exam Report No.	Status	Remarks
CLASS 1, PR COMP REACTOR VESSEL-SYSTEM LEAKAGE TEST N/A N/A 305-NO-DWG	B-P B15.10	VT-2	1Q800-03-124	SAT	Exam completed by applicable ISI Pressure Testing Instructions.
1T23-005-E EXTERIOR EL 610-664 AZ 0-90 (6%) N/A N/A 305-503-127	E-A E1.12	VT-3	1042-02-0009	SAT	Partial exam with remainder to be performed during cycle 10.
1T23-006-E EXTERIOR EL 610-664 AZ 90-180 (5%) N/A N/A 305-503-128	E-A E1.12	VT-3	1042-02-0010	SAT	Partial exam with remainder to be performed during cycle 10.
1T23-007-E EXTERIOR EL 610-664 AZ 180-270 (6%) N/A N/A 305-503-129	E-A E1.12	VT-3	1042-02-0011	SAT	Partial exam with remainder to be performed during cycle 10.
1T23-008-E EXTERIOR EL 610-664 AZ 270-360 (5%) N/A N/A 305-503-130	E-A E1.12	VT-3	1042-02-0012	SAT	Partial exam with remainder to be performed during cycle 10.
1T23-015-E EXTERIOR FUEL TRANSFER TUBE EL 620-652 (1%) N/A N/A 305-503-132	E-A E1.12	VT-3	1042-03-0043	SAT	Exam found light and heavy surface rust adjacent to some of the weld seams. No areas of material loss greater than 1/32".
1T23-001-I SUPPRESION POOL WALL EL 575-599 AZ 0-90 (3%) N/A N/A 305-503-101	E-A E1.12	VT-3	1042-03-0035	SAT	Partial direct visual exams performed with Suppression pool level at 591' (appx. 7.4% of exam area). See 1042-03-0035 for additional 9.7% coverage.
1T23-002-I SUPPRESION POOL WALL EL 575-599 AZ 90-180 (3%) N/A N/A 305-503-102	E-A E1.12	VT-3	1042-03-0046	SAT	Partial direct visual exam of upper 3ft (appx 11% of exam area).
1T23-003-I SUPPRESION POOL WALL EL 575-599 AZ 180-270 (3%) N/A N/A 305-503-103	E-A E1.12	VT-3	1Q800-03-125	SAT	Partial direct visual exams of upper 3 feet (appx. 11% of exam area). For actual exam report, see 1042-03-0046.
1T23-004-I SUPPRESION POOL WALL EL 575-599 AZ 270-360 (3%) N/A N/A 305-503-104	E-A E1.12	VT-3	1Q800-03-126	SAT	Partial direct visual exams (appx. 31% of exam area). For actual exam reports, see 1042-03-0035 and 1042-03-0046.

ID of Component Examined Description of Component Size - Sched. - ISI Dwg. No.	ASME Category ASME Item No.	Exam Method	Exam Report No.	Status	Remarks
1T23-017-EM CTMT EXT INTERFACE WITH ANNULUS POUR AZ 0-360 N/A N/A 305-503-139	E-C E4.11	VT-3	1042-02-0014	SAT	None.
1T23-017-EM CTMT EXT INTERFACE WITH ANNULUS POUR AZ 0-360 N/A N/A 305-503-139	E-C E4.11	VT-3	1042-02-0008	UNSAT	Supplemental VT-1 exam of interface area uncovered to determine extent of water intrusion and heavy surface rust. CRs 02-04440 and 03-00333.
1P53-A306-B CONTAINMENT EQUIPMENT HATCH BOLTING N/A N/A 305-503-126	E-G E8.10	VT-1	1042-03-0027	SAT	None.
1T23-017-EC ANNULUS CONCRETE SURFACE BENEATH E32 LEAKOFF LINES N/A N/A 305-503-139	L-A L1.12	VT-3	1042-02-0013	SAT	None.

Table Notes:

1. Status codes are "SAT" or "UNSAT" for visual and surface examinations. For ultrasonic examinations they are "IND" for indication, "GEO" for geometry, and "NRI" for no recordable indications.
2. The above exam listing is all the preservice examinations that were performed during Cycle8/RFO8 due to repair, replacement, or modification activities.

First Energy Nuclear Operating Company

Perry Nuclear Power Plant

ISI Summary Report No. P0059-0009
Second Interval, Second Period, First Outage (RFO9)
Cycle 9 and RFO9 Preservice Examinations

Prepared by: _____ Date: 8/22/03
ISI Engineer

Reviewed by: Thomas G Lapp ANII Date: 8/27/03
Authorized Nuclear Inservice Inspector

ID of Component Examined Description of Component Size - Sched. - ISI Dwg. No.	ASME Category ASME Item No.	Exam Method	Exam Report No.	Status	Remarks
1B13-02/27-B CRD FLANGE BOLTING N/A N/A 305-006-110	B-G-2 B7.80	VT-1	1042-03-0024	SAT	Examined 8 new capscrews and washers.
1B13-06/31-B CRD FLANGE BOLTING N/A N/A 305-006-110	B-G-2 B7.80	VT-1	1Q800-03-097	SAT	Examined 8 new capscrews and washers. See report 1042-03-0024 for exam results.
1B13-10/27-B CRD FLANGE BOLTING N/A N/A 305-006-110	B-G-2 B7.80	VT-1	1Q800-03-098	SAT	Examined 8 new capscrews and washers. See report 1042-03-0024 for exam results.
1B13-14/19-B CRD FLANGE BOLTING N/A N/A 305-006-110	B-G-2 B7.80	VT-1	1Q800-03-099	SAT	Examined 8 new capscrews and washers. See report 1042-03-0024 for exam results.
1B13-18/19-B CRD FLANGE BOLTING N/A N/A 305-006-110	B-G-2 B7.80	VT-1	1Q800-03-100	SAT	Examined 8 new capscrews and washers. See report 1042-03-0024 for exam results.
1B13-22/11-B CRD FLANGE BOLTING N/A N/A 305-006-110	B-G-2 B7.80	VT-1	1Q800-03-101	SAT	Examined 8 new capscrews and washers. See report 1042-03-0024 for exam results.
1B13-22/19-B CRD FLANGE BOLTING N/A N/A 305-006-110	B-G-2 B7.80	VT-1	1Q800-03-102	SAT	Examined 8 new capscrews and washers. See report 1042-03-0024 for exam results.
1B13-22/31-B CRD FLANGE BOLTING N/A N/A 305-006-110	B-G-2 B7.80	VT-1	1Q800-03-103	SAT	Examined 8 new capscrews and washers. See report 1042-03-0024 for exam results.
1B13-22/35-B CRD FLANGE BOLTING N/A N/A 305-006-110	B-G-2 B7.80	VT-1	1042-03-0028	SAT	Examined 8 new capscrews and washers.
1B13-26/35-B CRD FLANGE BOLTING N/A N/A 305-006-110	B-G-2 B7.80	VT-1	1Q800-03-104	SAT	Examined 8 new capscrews and washers. See report 1042-03-0024 for exam results.

ID of Component Examined Description of Component Size - Sched. - ISI Dwg. No.	ASME Category ASME Item No.	Exam Method	Exam Report No.	Status	Remarks
1B13-26/43-B CRD FLANGE BOLTING N/A N/A 305-006-110	B-G-2 B7.80	VT-1	1Q800-03-105	SAT	Examined 8 new capscrews and washers. See report 1042-03-0024 for exam results.
1B13-26/55-B CRD FLANGE BOLTING N/A N/A 305-006-110	B-G-2 B7.80	VT-1	1Q800-03-106	SAT	Examined 8 new capscrews and washers. See report 1042-03-0024 for exam results.
1B13-30/27-B CRD FLANGE BOLTING N/A N/A 305-006-110	B-G-2 B7.80	VT-1	1Q800-03-107	SAT	Examined 8 new capscrews and washers. See report 1042-03-0024 for exam results.
1B13-34/19-B CRD FLANGE BOLTING N/A N/A 305-006-110	B-G-2 B7.80	VT-1	1Q800-03-108	SAT	Examined 8 new capscrews and washers. See report 1042-03-0024 for exam results.
1B13-34/31-B CRD FLANGE BOLTING N/A N/A 305-006-110	B-G-2 B7.80	VT-1	1Q800-03-109	SAT	Examined 8 new capscrews and washers. See report 1042-03-0024 for exam results.
1B13-34/51-B CRD FLANGE BOLTING N/A N/A 305-006-110	B-G-2 B7.80	VT-1	1Q800-03-110	SAT	Examined 8 new capscrews and washers. See report 1042-03-0024 for exam results.
1B13-38/07-B CRD FLANGE BOLTING N/A N/A 305-006-110	B-G-2 B7.80	VT-1	1Q800-03-111	SAT	Examined 8 new capscrews and washers. See report 1042-03-0024 for exam results.
1B13-38/11-B CRD FLANGE BOLTING N/A N/A 305-006-110	B-G-2 B7.80	VT-1	1Q800-03-112	SAT	Examined 8 new capscrews and washers. See report 1042-03-0024 for exam results.
1B13-38/19-B CRD FLANGE BOLTING N/A N/A 305-006-110	B-G-2 B7.80	VT-1	1Q800-03-113	SAT	Examined 8 new capscrews and washers. See report 1042-03-0024 for exam results.
1B13-38/51-B CRD FLANGE BOLTING N/A N/A 305-006-110	B-G-2 B7.80	VT-1	1Q800-03-114	SAT	Examined 8 new capscrews and washers. See report 1042-03-0024 for exam results.

ID of Component Examined Description of Component Size - Sched. - ISI Dwg. No.	ASME Category ASME Item No.	Exam Method	Exam Report No.	Status	Remarks
1B13-42/35-B CRD FLANGE BOLTING N/A N/A 305-006-110	B-G-2 B7.80	VT-1	1Q800-03-115	SAT	Examined 8 new capscrews and washers. See report 1042-03-0024 for exam results.
1B13-46/35-B CRD FLANGE BOLTING N/A N/A 305-006-110	B-G-2 B7.80	VT-1	1Q800-03-116	SAT	Examined 8 new capscrews and washers. See report 1042-03-0024 for exam results.
1B13-46/47-B CRD FLANGE BOLTING N/A N/A 305-006-110	B-G-2 B7.80	VT-1	1Q800-03-117	SAT	Examined 8 new capscrews and washers. See report 1042-03-0024 for exam results.
1B13-50/47-B CRD FLANGE BOLTING N/A N/A 305-006-110	B-G-2 B7.80	VT-1	1Q800-03-118	SAT	Examined 8 new capscrews and washers. See report 1042-03-0024 for exam results.
1B13-50/51-B CRD FLANGE BOLTING N/A N/A 305-006-110	B-G-2 B7.80	VT-1	1Q800-03-119	SAT	Examined 8 new capscrews and washers. See report 1042-03-0024 for exam results.
1B13-54/39-B CRD FLANGE BOLTING N/A N/A 305-006-110	B-G-2 B7.80	VT-1	1Q800-03-120	SAT	Examined 8 new capscrews and washers. See report 1042-03-0024 for exam results.
1B21-S101C HYDRAULIC SNUBBER MPL 1B21G7071 26" N/A 305-605-103	F-A F1.SN	VT-3	VT-03-0478	SAT	PSI Exam of like for like E-Systems Hydraulic snubber replacement for seal life EQ.
1B33-S370A HYDRAULIC SNUBBER, PUMP MOTOR, MPL 1B33G7065A N/A N/A 305-602-102	F-A F4.0	VT-3	VT-03-0531	SAT	PSI Exam of like for like E-Systems Hydraulic snubber replacement for seal life EQ.
1B33-S371A HYDRAULIC SNUBBER, PUMP MOTOR, MPL 1B33G7066A N/A N/A 305-602-102	F-A F4.0	VT-3	VT-03-0422	SAT	PSI Exam of like for like E-Systems Hydraulic snubber replacement for seal life EQ.
1B33-S372A HYDRAULIC SNUBBER, PUMP (WA), MPL 1B33G7067A N/A N/A 305-602-102	F-A F4.0	VT-3	VT-03-0612	SAT	PSI Exam of like for like E-Systems Hydraulic snubber replacement for seal life EQ.

ID of Component Examined Description of Component Size - Sched. - ISI Dwg. No.	ASME Category ASME Item No.	Exam Method	Exam Report No.	Status	Remarks
1B33-S373A HYDRAULIC SNUBBER, PUMP (WA), MPL 1B33G7068A N/A N/A 305-602-102	F-A F4.0	VT-3	VT-03-0511	SAT	PSI Exam of like for like E-Systems Hydraulic snubber replacement for seal life EQ.
1B33-S374A HYDRAULIC SNUBBER, PUMP (WA), MPL 1B33G7069A N/A N/A 305-602-102	F-A F4.0	VT-3	VT-03-0554	SAT	PSI Exam of like for like E-Systems Hydraulic snubber replacement for seal life EQ.
1E12-H0026 MECHANICAL SNUBBER 12" N/A 305-642-142	F-A F1.SN	VT-3	VT-03-0097	SAT	PSI Exam performed due to Load Stud replacement following snubber testing.
1E12-H0386 MECHANICAL SNUBBER 20" N/A 305-642-102	F-A F2.SN	VT-3	VT-03-0107	SAT	PSI Exam for replacement of PSA-35 mechanical snubber with Lisega hydraulic snubber per ECP 01-8052.
1E12-H0410 MECHANICAL SNUBBER 18" N/A 305-642-134	F-A F2.SN	VT-3	VT-03-0378	SAT	PSI Exam performed due to Load Pin replacement following snubber testing.
1E12-H0769 MECHANICAL SNUBBER 20" N/A 305-642-102	F-A F2.SN	VT-3	VT-03-0108	SAT	PSI Exam for replacement of PSA-35 mechanical snubber with Lisega hydraulic snubber per ECP 01-8052.
1E22-H0032 MECHANICAL SNUBBER 24" N/A 305-701-102	F-A F2.SN	VT-3	VT-03-0695	SAT	PSI Exam performed following like for like snubber replacement because the snubber got wet. CR 03-03239.
1E22-H0034 MECHANICAL SNUBBER 24" N/A 305-701-102	F-A F2.SN	VT-3	VT-03-0696	SAT	PSI Exam performed following like for like snubber replacement because the snubber got wet. CR 03-03239.
1E51-H0110 MECHANICAL SNUBBER 10" N/A 305-632-101	F-A F1.SN	VT-3	VT-03-0726	SAT	PSI Exam performed following like for like snubber replacement because the snubber got wet. No CR.
1E51-H0111 MECHANICAL SNUBBER 10" N/A 305-632-101	F-A F1.SN	VT-3	VT-03-0727	SAT	PSI Exam performed following like for like snubber replacement because the snubber got wet. No CR.

ID of Component Examined Description of Component Size - Sched. - ISI Dwg. No.	ASME Category ASME Item No.	Exam Method	Exam Report No.	Status	Remarks
1E51-H0156 MECHANICAL SNUBBER 12" N/A 305-632-103	F-A F2.SN	VT-3	VT-03-0008	SAT	PSI Exam performed following like for like snubber replacement because the snubber got wet. CR 02-0560.
1P45-H0132 MECHANICAL SNUBBER (TANDEM) 20" N/A 305-792-108	F-A F3.SN	VT-3	VT-03-0694	SAT	PSI Exam performed following like for like replacement of North snubber because the snubber got wet due to Emergency Service Water System (P45) pipe leak. No CR specific to snubber, but refer to CR 03-03033 for the pipe leak.
1P45-H0502 MECHANICAL SNUBBER 8" N/A 305-792-111	F-A F3.SN	VT-3	VT-03-0020	SAT	PSI Exam performed due to Load Pin replacement following snubber testing.

Table Notes:

1. Status codes are "SAT" or "UNSAT" for visual and surface examinations. For ultrasonic examinations they are "IND" for indication, "GEO" for geometry, and "NRI" for no recordable indications.
2. The above exam listing is all the preservice examinations that were performed during Cycle8/RFO8 due to repair, replacement, or modification activities.

APPENDIX B

"CYCLE 9 & RFO9 NIS-2/NR-1 FORMS"

INSERVICE INSPECTION SUMMARY REPORT

FOR

PERRY NUCLEAR POWER PLANT

(PNPP)

UNIT 1

1B13-037

NIS-2/NR-1 OWNER'S REPORT FOR REPAIRS OR REPLACEMENTS

As required by the Provisions of the ASME Code Section XI

PNPP No. 9308 Rev. 9/11/00 NQI-1741

1. Owner: FIRSTENERGY CORP.
10 Center Road, Perry, Ohio 44081

Date 05/29//03
Sheet 1 of 46

2. Plant: Perry Nuclear Power Plant (PNPP)
10 Center Road, Perry, Ohio 44081

Unit 1
See Sheet 2 of 46 for WOs
(Repair Org. P.O. No., etc.)

3. Work Performed By: FIRSTENERGY Nuclear Operating Company PNPP
10 Center Road, Perry, Ohio 44081

Type Code Symbol Stamp NR
Authorization No. 33
Expiration Date 9-26-05

4. Identification of System: 1B13 Reactor and Internals

5. (a) Applicable Construction Code: ASME Sec III, Subsection NB ,1974 Edition
NAME/SECTION/DIVISION/CLASS

Winter 19 75 Addenda Code Case(s) n207, 1361-2, 1728, 1644-4, n272

(b) Construction Code used for repairs, modifications, or replacements: 1974 (Edition) W75 (Addenda) N/A (Code Case(s))

(c) ASME Code Section XI applicable for Inservice Inspection: 1989 (Edition) N/A (Addenda) N/A (Code Case(s))

(d) Applicable Edition of Section XI Utilized for Repairs, Modification, or Replacements:

19 89 , N/A 19 N/A Addenda N/A
Code Case(s)

(e) Design Responsibilities FIRSTENERGY Nuclear Operating Company

6. Identification of Components Repaired, Modified, or Replacement Components

Name of Component	Name of Manufacturer	Manufacturer Serial No.	Nat. Board No.	Other ID.	Year Built	Repair, Replacement, or Modification	ASME Code Stamped
Piping System	General Electric	1B13	64077	1B13-D0008	1984	Replacement	Yes

7. Description of Work: 22 CRDMs were replaced. See Sheet 2 of 46 for the Work Orders used, the Core locations,,Serial Numbers of the removed CRDMs, Serial Numbers of the replacement CRDMs, and the amount & Heat Numbers of new Capscrews used..

8. Test Conducted: Hydrostatic- ☐ Pneumatic- ☐ Nominal Operating Pressure- ☒ Other- ☐

Pressure 1034 psi Test Temperature 135 degrees F Code Case(s) N/A

NIS-2/NR-1 OWNER'S REPORT FOR REPAIRS OR REPLACEMENTS (Back)

PNPP No. 9308 Rev. 9/11/00 NQI-1741

9. Remarks: _____

NO NAMEPLATE/STAMPING PERFORMED DUE TO THE INTERFACE CONTROLS OF RA-2370 BEING IN EFFECT AND JURISDICTIONAL AUTHORITY CONCURRENCE HAVING BEEN RECEIVED.

Note: Attach all applicable Manufacturer's Data Reports. Supplemental sheets such as lists, sketches, or drawings may be used, provided (1) size is 8 1/2 in. x 11 in., (2) information in items 1 through 6 of this report is included on each sheet, and (3) each sheet is numbered and the number of sheets is recorded on the front of this form.

CERTIFICATE OF COMPLIANCE

I, Lester J. Erbacher, certify that to the best of my knowledge and belief the statements made in this report are correct and the repair, modification or replacement of the items described above conforms to Section XI of the ASME Code and to the National Board Inspection Code "NR" rules.

National Board Certificate of Authorization No. 33 to use the "NR stamp expires 9-26, 20 05

Date May 29, 20 03 Signed FENOC-PNPP (name of repair organization) (authorized representative) QE (title)

CERTIFICATE OF INSPECTION/INSERVICE INSPECTION

I, Thomas G. Laps, holding a valid commission issued by The National Board of Boiler and Pressure Vessel Inspectors and certificate of competency issued by the jurisdiction of OHIO and employed by Hartford Steam Boiler Ct. of Hartford, Conn. have inspected the repair, modification or replacement described in this report on MAY 31 20 03 and state that to the best of my knowledge and belief, this repair, modification or replacement has been completed in accordance with Section XI of the ASME Code and the National Board Inspection Code "NR" rules.

By signing this certificate, neither the undersigned nor my employer makes any warranty, expressed or implied, concerning the work described in this report. Furthermore, neither the undersigned nor my employer shall be liable in any manner for any personal injury, property damage or loss of any kind arising from or connected with this inspection.

Date MAY 31, 20 03 Signed Thomas G Laps (inspector) Commissions NB 9330 "N" "I" "A" Ohio Comm. (National Board (include endorsements), and jurisdiction, and no.)

1B13-037
SHT. 2 of 46

Work Order Number	Core Location	S/N Removed	S/N Installed	# of New Capscrews	Heat Number	SAP Order #
02-07927, R-0	D5047	A5715	A5110	8	F190	200000050
03-00862, R-0	D5439	A4182	A4670	8	13433	200009893
01-16641,R-0	D0227	A5169	A5656	8	13485	200009789
01-16706, R-0	D3419	A4172	A3990	8	13628	200009984
01-10780, R-0	D2219	A5054	A2468	8	13485	200004527
01-16701, R-0	D2231	A5510	A5283	8	13485	200009914
01-16305, R-0	D3027	A1639	A3703	8	13630	200009513
01-16718, R-0	D5051	A5692	A5154	8	13629B	200010217
01-16703, R-0	D2635	A4218	A2213	8	13485	200009932
02-07928, R-0	D1819	A5237	A4434	8	13630	200000071
01-16709, R-0	D3807	A3498	A3551	8	13628	200010027
01-16710, R-0	D3811	A3895	A5699	8	13628	200010064
01-16714, R-0	D4635	A5389	A5451	8	13433	200010138
01-16708, R-0	D3451	A4664	A4218	8	13629B	200010026
01-16698, R-0	D1419	A2257	9253	8	13485	200009857
01-16705, R-0	D2655	A5427	A6472	8	13433	200009961
01-16642, R-0	D0631	A4266	A4189	8	13485	200009813
01-16713, R-0	D4235	A5354	A4269	8	13629B	200010117
01-16704, R-0	D2643	A4117	A5681	8	13485	200009950
01-16712, R-0	D3851	8964	A5124	8	13630	200010097
01-16711, R-0	D3819	A4250	A5568	8	13433	200010065
01-16716, R-0	D4647	A4537	A4740	8	13629B	200010178

3

FORM N-2 NPT CERTIFICATE HOLDERS' DATA REPORT FOR NUCLEAR PART AND APPURTENANCES*

As required by the Provision of the ASME Code Rules, Section III, Div. 1

1813-037
SHT. 3 of 46

1. (a) Manufactured by General Electric Company, Castle Hayne Rd., Wilmington, N.C.
(Name and address of NPT Certificate Holder)

(b) Manufactured for General Electric Company, San Jose, California (NEBG)
(Name and address of N Certificate Holder for completed nuclear component)

2. Identification-Certificate Holder's Serial No. of Part A5110 Nat'l Bd. No.

(a) Constructed According to Drawing No. 768E534G001 Drawing Prepared by D. L. Peterson

(b) Description of Part Inspected Control Rod Drive, Model #7RDB144DG001

(c) Applicable ASME Code: Section III, Edition 1974, Addenda date W'75, Case No. N207 1361-2 Class 1

3. Remarks: Standard part for use with Reactor. Hydrostatically tested at 1820 psi.
(Brief description of service for which component was designed)

* Total number of sheets - 2

We certify that the statements made in this report are correct and this vessel part or appurtenance as defined in the Code conforms to the rules of construction of the ASME Code Section III.
(The applicable Design Specification and Stress Report are not the responsibility of the NPT Certificate Holder for parts. An NPT Certificate Holder for appurtenances is responsible for furnishing a separate Design Specification and Stress Report if the appurtenance is not included in the component Design Specification and Stress Report.)

Date 7/24 19 81 Signed GE, NEPD-WMD-QA (NPT Certificate Holder) By J. Stoudemire

Certificate of Authorization Expires September 15, 1981 Certificate of Authorization No. NPT N-1151

CERTIFICATION OF DESIGN FOR APPURTENANCE (when applicable)

Design information on file at GE, NEPD-WMD-QA, Castle Hayne Rd., Wilmington, N.C.
22A5556, Rev. 2

Stress analysis report on file at GE, NEPD-WMD-QA, Castle Hayne Rd., Wilmington, N.C.
22A4912, Rev. 2

Design specifications certified by B. N. Sridhar Prof. Eng. State Calif Reg. No. 18345

Stress analysis report certified by B. N. Sridhar Prof. Eng. State Calif Reg. No. 18345

CERTIFICATE OF SHOP INSPECTION

I, the undersigned, holding a valid commission issued by the National Board of Boiler and Pressure Vessel Inspectors and/or the State or Province of North Carolina and employed by Department of Labor of State of North Carolina have inspected the part of a pressure vessel described in this Partial Data Report on 7/24 19 81, and state that to the best of my knowledge and belief, the NPT Certificate Holder has constructed this part in accordance with the ASME Code Section III.

By signing this certificate, neither the inspector nor his employer makes any warranty, expressed or implied, concerning the part described in this Partial Data Report. Furthermore, neither the inspector nor his employer shall be liable in any manner for any personal injury or property damage or a loss of any kind arising from or connected with this inspection.

Date 7/24 19 81

G. Merrill
Inspector's Signature

Commissions N.C. 723, PA WC1766, OHIO
National Board, State, Province and No.

00519

*Supplemental sheets in form of lists, sketches or drawings may be used provided (1) size is 8½" x 11", (2) information in items 1-3 on this Data Report is included on each sheet, and (3) each sheet is numbered and number of sheets is recorded in item 3, "Remarks"

(10/77) This form (E00040) may be obtained from the Order Dept., ASME, 345 E. 47th St., New York, N.Y. 10017

FORM N-2 (back)

Items 4–8 incl. to be completed for single wall vessels, jackets of jacketed vessels, or shells of heat exchangers.

4. Shell: Material ____ ____ T.S. ____ Nominal Thickness ____ in. Corrosion Allowance ____ in. Dia. ____ ft. ____ in. Length ____ ft. ____ in.
(Kind & Spec. No.) (Min. of Range Specified)

5. Seams: Long ____ H.T.[1] ____ R.T. ____ Efficiency ____ %

Girth ____ H.T.[1] ____ R.T. ____ No. of Courses ____

6. Heads: (a) Material ____ T.S. ____ (b) Material ____ T.S. ____

Location (Top, bottom, ends)	Thickness	Crown Radius	Knuckle Radius	Elliptical Ratio	Conical Apex Angle	Hemispherical Radius	Flat Diameter	Side to Press. (Conv. or Conc.)
(a)								
(b)								

If removable, bolts used ____ (Material, Spec. No., T.S., Size, Number) Other fastening ____ (Describe or attach sketch)

7. Jacket Closure: ____
(Describe as ogee end weld, bar, etc. If bar give dimensions, if bolted, describe or sketch)

8. Design pressure[2] 1250 psi at 575 °F Drop Weight ____ Charpy Impact ____ ft-lb at temp. of ____ °F

Items 9 and 10 to be completed for tube sections

9. Tube Sheets: Stationary. Material ____ (Kind & Spec. No.) Dia. ____ (Subject to pressure) Thickness ____ in. Attachment ____ (Welded, Bolted)

Floating. Material ____ Dia. ____ Thickness ____ in. Attachment ____

10. Tubes: Material ____ O.D. ____ in. Thickness ____ inches or gage. Number ____ Type ____ (Str. or U)

Items 11–14 incl. to be completed for inner chambers of jacketed vessels, or channels of heat exchangers.

11. Shell: Material ____ T.S. ____ Nominal Thickness ____ in. Corrosion Allowance ____ in. Dia. ____ ft. ____ in. Length ____ ft. ____ in.
(Kind & Spec. No.) (Min. of Range Specified)

12. Seams: Long ____ H.T.[1] ____ R.T. ____ Efficiency ____ %

Girth ____ H.T.[1] ____ R.T. ____ No. of Courses ____

13. Heads (a) Material ____ T.S. ____ (b) Material ____ T.S. ____

Location	Thickness	Crown Radius	Knuckle Radius	Elliptical Ratio	Conical Apex Angle	Hemispherical Radius	Flat Diameter	Side to Press. (Conv. or Conc.)
(a) Top, bottom, ends								
(b) Channel								

If removable, bolts used (a) ____ (b) ____ (c) ____ Other fastening ____ (Describe or attach sketch)

14. Design pressure[2] ____ psi at ____ °F Drop Weight ____ Charpy Impact ____ ft-lb at temp. of ____ °F

Items below to be completed for all vessels where applicable.

15. Safety Valve Outlets: Number ____ Size ____ Location ____

16. Nozzles:

Purpose (Inlet, Outlet, Drain)	Number	Dia. or Size	Type	Material	Thickness	Reinforcement Material	How Attached

17. Inspection Openings: Manholes, No. ____ Size ____ Location ____
Handholes, No. ____ Size ____ Location ____
Threaded, No. ____ Size ____ Location ____

18. Supports: Skirt ____ (Yes or No) Lugs ____ (Number) Legs ____ (Number) Other ____ (Describe) Attached ____ (Where & How)

[1] If Postweld Heat-Treated.
[2] List other internal or external pressure with corresponding temperature when applicable.

4

FORM N-2 NPT CERTIFICATE HOLDERS' DATA REPORT FOR NUCLEAR PART AND APPURTENANCES*

As required by the Provision of the ASME Code Rules, Section III, Div. 1

1813-037 SHT. 4 of 45

1. (a) Manufactured by General Electric Company, Castle Hayne Rd., Wilmington, N.C.
(Name and address of NPT Certificate Holder)

(b) Manufactured for General Electric Company, San Jose, California (NEBG)
(Name and address of N Certificate Holder for completed nuclear component)

2. Identification-Certificate Holder's Serial No. of Part A5110 Nat'l Bd. No. _____

(a) Constructed According to Drawing No. 768E534G001 Drawing Prepared by D. L. Peterson

(b) Description of Part Inspected Control Rod Drive, Model #7RDB144DG001

(c) Applicable ASME Code: Section III, Edition 1974, Addenda date W'75, Case No. N207 1361-2 Class 1

1. Cap 166B9274P1
(167A2343)
SA182 - F316
3/8 thick x 1 1/16 OD

2. Indicator Pipe 166B9313P1
SA312-TP316
3/4 sch 40-seamless pipe
0.113 wall thickness
1.065 max. dia.

3. Plug 159A1176P1
SA182-F304
1/4 thick x 0.812 OD

4. Flange 919D610P1 (719E474)
SA182-F304
3.37 thick x 9 5/8 OD
neck 1 1/16 thick x 5.0 OD
2.875 ID

5. Base 137C5311P1
XM-19 ASME SA479
3.0 OD x .884 ID

6. Ring Flange 114B5122P2
SA182-F304
1" thick x 5.0 OD x 1.75 ID

7. Cap Screw 117C4516P2
SA193-B6
6 ea. 1/2 dia. on 4 1/8 bolt circle

8. Plug 175A7961P1
SA182-F304
0.38 thick x 1.307 dia.

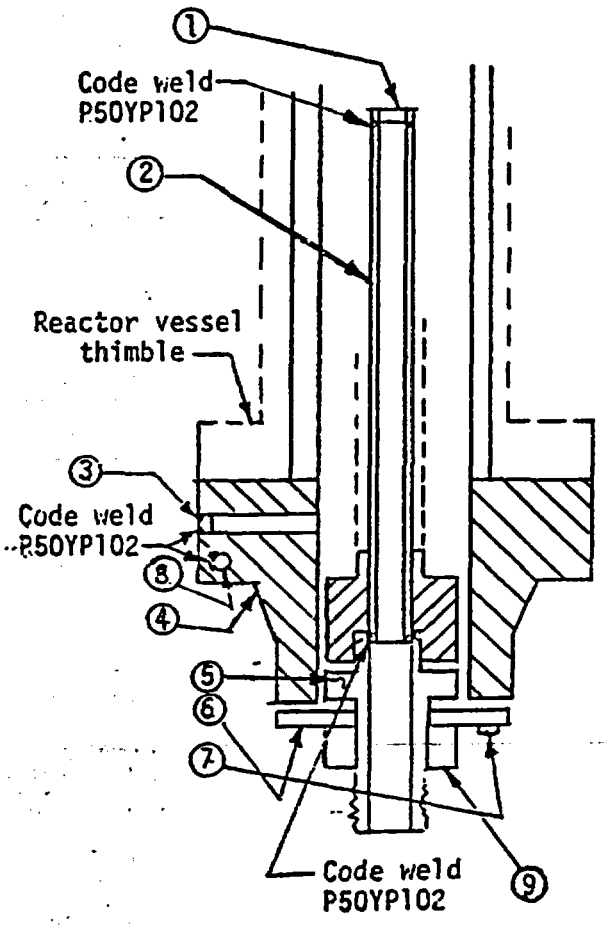

CONTROL ROD DRIVE
DWG - 768E534

9. Nut 137C5934P1
XM-19 SA479
1.30 thick x 2.62 dia.

0520

5

FORM N-2 NPT CERTIFICATE HOLDERS' DATA REPORT FOR NUCLEAR PART AND APPURTENANCES*

As required by the Provision of the ASME Code Rules, Section III, Div. 1 (1813-037 SHT. 5 of 46)

1. (a) Manufactured by General Electric Company, Castle Hayne Rd., Wilmington, N.C.
(Name and address of NPT Certificate Holder)

(b) Manufactured for General Electric Company, San Jose, California (NEBG)
(Name and address of N Certificate Holder for completed nuclear component)

2. Identification-Certificate Holder's Serial No. of Part A4670 Nat'l Bd. No. _____

(a) Constructed According to Drawing No. 768E534G001 Drawing Prepared by D. L. Peterson

(b) Description of Part Inspected Control Rod Drive, Model #7RDB144DG001

(c) Applicable ASME Code: Section III, Edition 1974, Addenda date W'75, Case No. N207 1361-2 Class 1

3. Remarks: Standard part for use with Reactor. Hydrostatically tested at 1820 psi.
(Brief description of service for which component was designed)

* Total number of sheets - 2

We certify that the statements made in this report are correct and this vessel part or appurtenance as defined in the Code conforms to the rules of construction of the ASME Code Section III.
(The applicable Design Specification and Stress Report are not the responsibility of the NPT Certificate Holder for parts. An NPT Certificate Holder for appurtenances is responsible for furnishing a separate Design Specification and Stress Report if the appurtenance is not included in the component Design Specification and Stress Report.)

Date 6/12 19 81 Signed GE, NEPD-WMD By J. Ottendorfer
(NPT Certificate Holder)

Certificate of Authorization Expires June 16, 1981 Certificate of Authorization No. NPT N-1151

CERTIFICATION OF DESIGN FOR APPURTENANCE (when applicable)

Design information on file at GE, NEPD-WMD-OA, Castle Hayne Rd., Wilmington, N.C.
22A5556, Rev. 2

Stress analysis report on file at GE, NEPD, San Jose, Calif.
22A4912, Rev. 2

Design specifications certified by B. N. Sridhar Prof. Eng. State Calif Reg. No. 18345

Stress analysis report certified by B. N. Sridhar Prof. Eng. State Calif Reg. No. 18345

CERTIFICATE OF SHOP INSPECTION

I, the undersigned, holding a valid commission issued by the National Board of Boiler and Pressure Vessel Inspectors and/or the State or Province of North Carolina and employed by Department of Labor of State of North Carolina have inspected the part of a pressure vessel described in this Partial Data Report on 6/12 19 81 and state that to the best of my knowledge and belief, the NPT Certificate Holder has constructed this part in accordance with the ASME Code Section III.

By signing this certificate, neither the Inspector nor his employer makes any warranty, expressed or implied, concerning the part described in this Partial Data Report. Furthermore, neither the Inspector nor his employer shall be liable in any manner for any personal injury or property damage or a loss of any kind arising from or connected with this inspection.

Date 6/12 19 81

E. R. Sherrill
Inspector's Signature

Commissions N.C. 723, PA.WC1766, OHIO
National Board, State, Province and No.

*Supplemental sheets in form of lists, sketches or drawings may be used provided (1) size is 8½" x 11", (2) information in items 1-2 on this Data Report is included on each sheet, and (3) each sheet is numbered and number of sheets is recorded in Item 3, "Remarks".

(10/77) This form (E00040) may be obtained from the Order Dept., ASME, 345 E. 47th St., New York, N.Y. 10017

0080

FORM N-2 (back)

Items 4–8 incl. to be completed for single wall vessels, jackets of jacketed vessels, or shells of heat exchangers.

4. Shell: Material ____ (Kind & Spec. No.) ____ T.S. ____ (Min. of Range Specified) Nominal Thickness ____ in. Corrosion Allowance ____ in. Dia. ____ ft. ____ in. Length ____ ft. ____ in.

5. Seams: Long ____ H.T.[1] ____ R.T. ____ Efficiency ____ %

Girth ____ H.T.[1] ____ R.T. ____ No. of Courses ____

6. Heads: (a) Material ____ T.S. ____ (b) Material ____ T.S. ____

	Location (Top, bottom, ends)	Thickness	Crown Radius	Knuckle Radius	Elliptical Ratio	Conical Apex Angle	Hemispherical Radius	Flat Diameter	Side to Press. (Conv. or Conc.)
(a)									
(b)									

If removable, bolts used ____ (Material, Spec. No., T.S., Size, Number) Other fastening ____ (Describe or attach sketch)

7. Jacket Closure: ____ (Describe as edge and weld, bar, etc. If bar give dimensions, if bolted, describe or sketch)

8. Design pressure[2] 1250 psi at 575 °F Drop Weight ____ Charpy Impact ____ ft-lb at temp. of ____ °F

Items 9 and 10 to be completed for tube sections

9. Tube Sheets: Stationary. Material ____ (Kind & Spec. No.) Dia. ____ (Subject to pressure) Thickness ____ in. Attachment ____ (Welded, Bolted)

Floating. Material ____ Dia. ____ Thickness ____ in. Attachment ____

10. Tubes: Material ____ O.D. ____ in. Thickness ____ inches or gage. Number ____ Type ____ (Str. or U)

Items 11–14 incl. to be completed for inner chambers of jacketed vessels, or channels of heat exchangers.

11. Shell: Material ____ (Kind & Spec. No.) T.S. ____ (Min. of Range Specified) Nominal Thickness ____ in. Corrosion Allowance ____ in. Dia. ____ ft. ____ in. Length ____ ft. ____ in.

12. Seams: Long ____ H.T.[1] ____ R.T. ____ Efficiency ____ %

Girth ____ H.T.[1] ____ R.T. ____ No. of Courses ____

13. Heads (a) Material ____ T.S. ____ (b) Material ____ T.S. ____

	Location	Thickness	Crown Radius	Knuckle Radius	Elliptical Ratio	Conical Apex Angle	Hemispherical Radius	Flat Diameter	Side to Press. (Conv. or Conc.)
(a)	Top, bottom, ends								
(b)	Channel								

If removable, bolts used (a) ____ (b) ____ (c) ____ Other fastening ____ (Describe or attach sketch)

14. Design pressure[2] ____ psi at ____ °F Drop Weight ____ Charpy Impact ____ ft-lb at temp. of ____ °F

Items below to be completed for all vessels where applicable.

15. Safety Valve Outlets: Number ____ Size ____ Location ____

16. Nozzles:

Purpose (Inlet, Outlet, Drain)	Number	Dia. or Size	Type	Material	Thickness	Reinforcement Material	How Attached

17. Inspection Openings: Manholes, No. ____ Size ____ Location ____
Handholes, No. ____ Size ____ Location ____
Threaded, No. ____ Size ____ Location ____

18. Supports: Skirt ____ (Yes or No) Lugs ____ (Number) Legs ____ (Number) Other ____ (Describe) Attached ____ (Where & How)

[1] If Postweld Heat-Treated.
[2] List other internal or external-pressure with corresponding temperature when applicable.

6

FORM N-2 NPT CERTIFICATE HOLDERS' DATA REPORT FOR NUCLEAR PART AND APPURTENANCES

As required by the Provision of the ASME Code Rules, Section III, Div. 1 B13-037 SHT 6 of 46

1. (a) Manufactured by General Electric Company, Castle Hayne Rd., Wilmington, N.C.
(Name and address of NPT Certificate Holder)

(b) Manufactured for General Electric Company, San Jose, California (NEBG)
(Name and address of N Certificate Holder for completed nuclear component)

2. Identification-Certificate Holder's Serial No. of Part A4670 Nat'l Bd. No. _____

(a) Constructed According to Drawing No. 768E534G001 Drawing Prepared by D. L. Peterson

(b) Description of Part Inspected Control Rod Drive, Model #7RDB144DG001

(c) Applicable ASME Code: Section III, Edition 1974, Addenda date W'75, Case No. N207 1361-2 Class 1

1. Cap 166B9274P1
(167A2343)
SA182 - F316
3/8 thick x 1 1/16 OD

2. Indicator Pipe 166B9313P1
SA312-TP316
3/4 sch 40-seamless pipe
0.113 wall thickness
1.065 max. dia.

3. Plug 159A1176P1
SA182-F304
1/4 thick x 0.812 OD

4. Flange 919D610P1 (719E474)
SA182-F304
3.37 thick x 9 5/8 OD
neck 1 1/16 thick x 5.0 OD
2.875 ID

5. Base 137C5311P1
XM-19 ASME SA479
3.0 OD x .884 ID

6. Ring Flange 114B5122P2
SA182-F304
1" thick x 5.0 OD x 1.75 ID

7. Cap Screw 117C4516P2
SA193-B6
6 ea. 1/2 dia. on 4 1/8 bolt circle

8. Plug 175A7961P1
SA182-F304
0.38 thick x 1.307 dia.

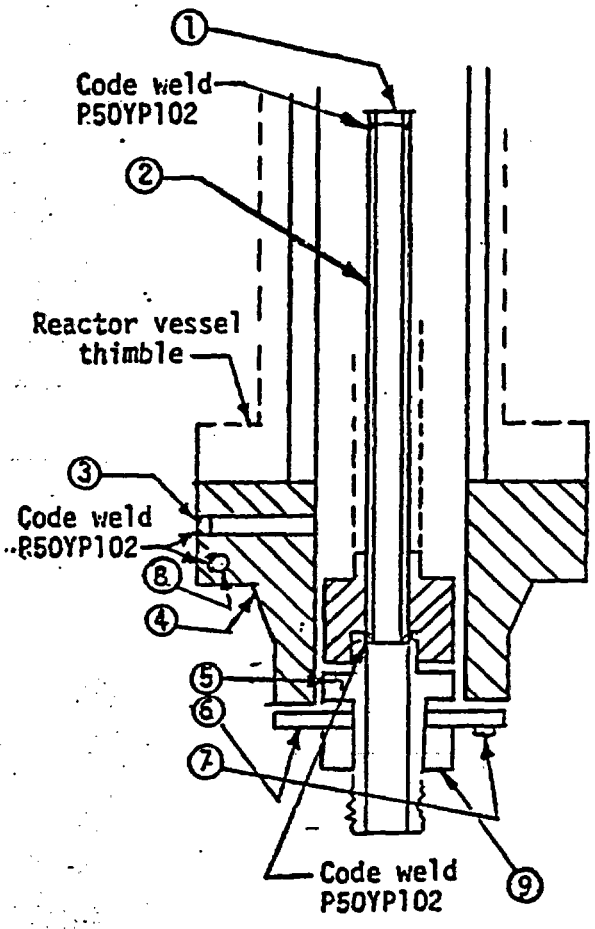

CONTROL ROD DRIVE
DWG - 768E534

9. Nut 137C5934P1
XM-19 SA479
1.30 thick x 2.62 dia.

00805

7

FORM N-2 NPT CERTIFICATE HOLDERS' DATA REPORT FOR NUCLEAR PART AND APPURTENANCES*

As required by the Provision of the ASME Code Rules, Section III, Div. 1

(813-037 SHT 7 of 46)

1. (a) Manufactured by General Electric Company, Castle Hayne Rd., Wilmington, N.C.
(Name and address of NPT Certificate Holder)

(b) Manufactured for General Electric Company, San Jose, California (NEBG)
(Name and address of N Certificate Holder for completed nuclear component)

2. Identification-Certificate Holder's Serial No. of Part A5656 Nat'l Bd. No. _____

(a) Constructed According to Drawing No. 768E534G001 Drawing Prepared by D. L. Peterson

(b) Description of Part Inspected Control Rod Drive, Model #7RDB144DG001

(c) Applicable ASME Code: Section III, Edition 1974, Addenda date W'75, Case No. N207 1361-2 Class 1

3. Remarks: Standard part for use with Reactor. Hydrostatically tested at 1820 psi.
(Brief description of service for which component was designed)

* Total number of sheets - 2

We certify that the statements made in this report are correct and this vessel part or appurtenance as defined in the Code conforms to the rules of construction of the ASME Code Section III.
(The applicable Design Specification and Stress Report are not the responsibility of the NPT Certificate Holder for parts. An NPT Certificate Holder for appurtenances is responsible for furnishing a separate Design Specification and Stress Report if the appurtenance is not included in the component Design Specification and Stress Report.)

Date 8/29 19 81 Signed GE, NEPD-WMD By J. Strudemann
(NPT Certificate Holder)

Certificate of Authorization Expires September 15, 1981 Certificate of Authorization No. NPT N-1151

CERTIFICATION OF DESIGN FOR APPURTENANCE (when applicable)

Design information on file at GE, NEPD-WMD-QA, Castle Hayne Rd., Wilmington, N.C.
22A5556, Rev. 2

Stress analysis report on file at GE, NEPD, San Jose, Calif.
22A4912, Rev. 2

Design specifications certified by B. N. Sridhar Prof. Eng. State Calif Reg. No. 18345

Stress analysis report certified by B. N. Sridhar Prof. Eng. State Calif Reg. No. 18345

CERTIFICATE OF SHOP INSPECTION

I, the undersigned, holding a valid commission issued by the National Board of Boiler and Pressure Vessel Inspectors and/or the State or Province of North Carolina and employed by Department of Labor of State of North Carolina have inspected the part of a pressure vessel described in this Partial Data Report on 8/29 19 81, and state that to the best of my knowledge and belief, the NPT Certificate Holder has constructed this part in accordance with the ASME Code Section III.

By signing this certificate, neither the Inspector nor his employer makes any warranty, expressed or implied, concerning the part described in this Partial Data Report. Furthermore, neither the Inspector nor his employer shall be liable in any manner for any personal injury or property damage or a loss of any kind arising from or connected with this inspection.

Date 8/29 19 81

Ed Sherrill
Inspector's Signature

Commissions N.C. 723; PA WC1766, OHIO
National Board, State, Province and No.

* Supplemental sheets in form of lists, sketches or drawings may be used provided (1) size is 8½" x 11", (2) information in Items 1-2 on this Data Report is included on each sheet, and (3) each sheet is numbered and number of sheets is recorded in Item 3, "Remarks".

00338

(10/77) This form (E00040) may be obtained from the Order Dept., ASME, 345 E. 47th St., New York, N.Y. 10017

FORM N-2 (back)

Items 4–8 incl. to be completed for single wall vessels, jackets of jacketed vessels, or shells of heat exchangers.

4. Shell: Material _____ (Kind & Spec. No.) T.S. _____ (Min. of Range Specified) Nominal Thickness ____ in. Corrosion Allowance ____ in. Dia. ____ ft. ____ in. Length ____ ft. ____ in.

5. Seams: Long _____ H.T.[1] _____ R.T. _____ Efficiency _____ %

Girth _____ H.T.[1] _____ R.T. _____ No. of Courses _____

6. Heads: (a) Material _____ T.S. _____ (b) Material _____ T.S. _____

	Location (Top, bottom, ends)	Thickness	Crown Radius	Knuckle Radius	Elliptical Ratio	Conical Apex Angle	Hemispherical Radius	Flat Diameter	Side to Press. (Conv. or Conc.)
(a)									
(b)									

If removable, bolts used _____ (Material, Spec. No., T.S., Size, Number) Other fastening _____ (Describe or attach sketch)

7. Jacket Closure: _____ (Describe as ogee and weld, bar, etc. If bar give dimensions, if bolted, describe or sketch)

8. Design pressure[2] 1250 psi at 575 °F

Drop Weight _____
Charpy Impact _____ ft-lb
at temp. of _____ °F

Items 9 and 10 to be completed for tube sections

9. Tube Sheets: Stationary. Material _____ (Kind & Spec. No.) Dia. _____ (Subject to pressure) Thickness ____ in. Attachment _____ (Welded, Bolted)

Floating. Material _____ Dia. _____ Thickness ____ in. Attachment _____

10. Tubes: Material _____ O.D. ____ in. Thickness _____ inches or gage. Number _____ Type _____ (Str. or U)

Items 11–14 incl. to be completed for inner chambers of jacketed vessels, or channels of heat exchangers.

11. Shell: Material _____ (Kind & Spec. No.) T.S. _____ (Min. of Range Specified) Nominal Thickness ____ in. Corrosion Allowance ____ in. Dia. ____ ft. ____ in. Length ____ ft. ____ in.

12. Seams: Long _____ H.T.[1] _____ R.T. _____ Efficiency _____ %

Girth _____ H.T.[1] _____ R.T. _____ No. of Courses _____

13. Heads (a) Material _____ T.S. _____ (b) Material _____ T.S. _____

	Location	Thickness	Crown Radius	Knuckle Radius	Elliptical Ratio	Conical Apex Angle	Hemispherical Radius	Flat Diameter	Side to Press. (Conv. or Conc.)
(a)	Top, bottom, ends								
(b)	Channel								

If removable, bolts used (a) _____ (b) _____ (c) _____ Other fastening _____ (Describe or attach sketch)

14. Design pressure[2] _____ psi at _____ °F

Drop Weight _____
Charpy Impact _____ ft-lb
at temp. of _____ °F

Items below to be completed for all vessels where applicable.

15. Safety Valve Outlets: Number _____ Size _____ Location _____

16. Nozzles:

Purpose (Inlet, Outlet, Drain)	Number	Dia. or Size	Type	Material	Thickness	Reinforcement Material	How Attached

17. Inspection Openings: Manholes, No. _____ Size _____ Location _____
Handholes, No. _____ Size _____ Location _____
Threaded, No. _____ Size _____ Location _____

18. Supports: (Skirt _____ (Yes or No) Lugs _____ (Number) Legs _____ (Number) Other _____ (Describe) Attached _____ (Where & How)

[1] If Postweld Heat-Treated.

8

FORM N-2 NPT CERTIFICATE HOLDERS' DATA REPORT FOR NUCLEAR PART AND APPURTENANCES*

As required by the Provision of the ASME Code Rules, Section III, Div. 1 {1013-037 SHT. 8 of 46} 17240

1. (a) Manufactured by General Electric Company, Castle Hayne Rd., Wilmington, N.C.
(Name and address of NPT Certificate Holder)

(b) Manufactured for General Electric Company, San Jose, California (NEBG)
(Name and address of N Certificate Holder for completed nuclear component)

2. Identification-Certificate Holder's Serial No. of Part A5656 Nat'l Bd. No.

(a) Constructed According to Drawing No. 768E534G001 Drawing Prepared by D. L. Peterson

(b) Description of Part Inspected Control Rod Drive, Model #7RDB144DG001

(c) Applicable ASME Code: Section III, Edition 1974, Addenda date W'75, Case No. N207 1361-2 Class 1

1. Cap 166B9274P1
(167A2343)
SA182 - F316
3/8 thick x 1 1/16 OD

2. Indicator Pipe 166B9313P1
SA312-TP316
3/4 sch 40-seamless pipe
0.113 wall thickness
1.065 max. dia.

3. Plug 159A1176P1
SA182-F304
1/4 thick x 0.812 OD

4. Flange 919D610P1 (719E474)
SA182-F304
3.37 thick x 9 5/8 OD
neck 1 1/16 thick x 5.0 OD
2.875 ID

5. Base 137C5311P1
XM-19 ASME SA479
3.0 OD x .884 ID

6. Ring Flange 114B5122P2
SA182-F304
1" thick x 5.0 OD x 1.75 ID

7. Cap Screw 117C4516P2
SA193-B6
6 ea. 1/2 dia. on 4 1/8 bolt circle

8. Plug 175A7961P1
SA182-F304
0.38 thick x 1.307 dia.

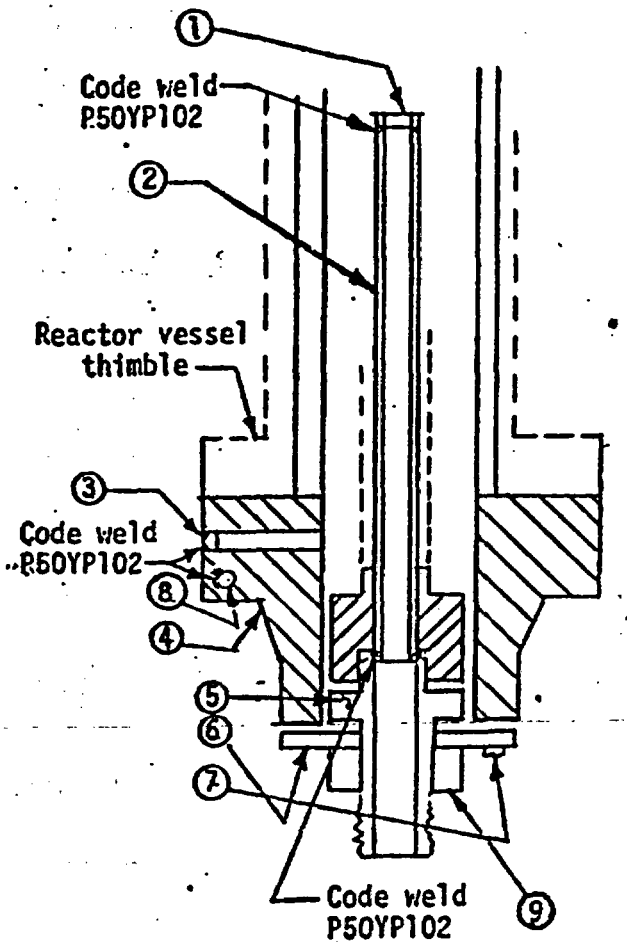

CONTROL ROD DRIVE
DWG - 768E534

9. Nut 137C5934P1
XM-19 SA479
1.30 thick x 2.62 dia.

00339

a

FORM N-2 NPT CERTIFICATE HOLDERS' DATA REPORT FOR NUCLEAR PART AND APPURTENANCES*

As required by the Provision of the ASME Code Rules, Section III, Div. 1

B13-037
SHT. 9 of 46

1. (a) Manufactured by General Electric Company, Castle Hayne Rd., Wilmington, N.C.
(Name and address of NPT Certificate Holder)

(b) Manufactured for General Electric Company, San Jose, California (NEBG)
(Name and address of N Certificate Holder for completed nuclear component)

2. Identification-Certificate Holder's Serial No. of Part A3990 Nat'l Bd. No. _____

(a) Constructed According to Drawing No. 768E534G001 Drawing Prepared by D. L. Paterson

(b) Description of Part Inspected Control Rod Drive, Model #7RDB144DG001

(c) Applicable ASME Code: Section III, Edition 1974, Addenda date W'75, Case No. N207 1361-2 Class 1

3. Remarks: Standard part for use with Reactor. Hydrostatically tested at 1820 psi.
(Brief description of service for which component was designed)

* Total number of sheets - 2

We certify that the statements made in this report are correct and this vessel part or appurtenance as defined in the Code conforms to the rules of construction of the ASME Code Section III.
(The applicable Design Specification and Stress Report are not the responsibility of the NPT Certificate Holder for parts. An NPT Certificate Holder for appurtenances is responsible for furnishing a separate Design Specification and Stress Report if the appurtenance is not included in the component Design Specification and Stress Report.)

Date 6/12 19 81 Signed GE, NEPD-WMD By J. Ettouderman
(NPT Certificate Holder)

Certificate of Authorization Expires June 16, 1981 Certificate of Authorization No. NPT N-1151

CERTIFICATION OF DESIGN FOR APPURTENANCE (when applicable)

Design information on file at GE, NEPD-WMD-OA, Castle Hayne Rd., Wilmington, N.C.
22A5556, Rev. 2

Stress analysis report on file at GE, NEPD, San Jose, Calif.
22A4912, Rev. 2

Design specifications certified by B. N. Sridhar Prof. Eng. State Calif Reg. No. 18345

Stress analysis report certified by B. N. Sridhar Prof. Eng. State Calif Reg. No. 18345

CERTIFICATE OF SHOP INSPECTION

I, the undersigned, holding a valid commission issued by the National Board of Boiler and Pressure Vessel Inspectors and/or the State or Province of North Carolina and employed by Department of Labor of State of North Carolina have inspected the part of a pressure vessel described in this Partial Data Report on 6/12 19 81, and state that to the best of my knowledge and belief, the NPT Certificate Holder has constructed this part in accordance with the ASME Code Section III.

By signing this certificate, neither the Inspector nor his employer makes any warranty, expressed or implied, concerning the part described in this Partial Data Report. Furthermore, neither the Inspector nor his employer shall be liable in any manner for any personal injury or property damage or a loss of any kind arising from or connected with this inspection.

Date 6/12 19 81

E. B. Merrill
Inspector's Signature

Commissions N.C. 723, PA WC1766, OHIO
National Board, State, Province and No.

*Supplemental sheets in form of lists, sketches or drawings may be used provided (1) size is 8½" x 11", (2) information in items 1-2 on this Data Report is included on each sheet, and (3) each sheet is numbered and number of sheets is recorded in item 3, "Remarks".

00128

(10/77) This form (E00040) may be obtained from the Order Dept., ASME, 345 E. 47th St., New York, N.Y. 10017

FORM N-2 (back)

Items 4–8 incl. to be completed for single wall vessels, jackets of jacketed vessels, or shells of heat exchangers.

4. Shell: Material _____ T.S. _____ Nominal Thickness ____ in. Corrosion Allowance ____ in. Dia. ____ ft. ____ in. Length ____ ft. ____ in.
(Kind & Spec. No.) (Min. of Range Specified)

5. Seams: Long _____ H.T.[1] _____ R.T. _____ Efficiency _____ %

Girth _____ H.T.[1] _____ R.T. _____ No. of Courses _____

6. Heads: (a) Material _____ T.S. _____ (b) Material _____ T.S. _____

Location (Top, bottom, ends)	Thickness	Crown Radius	Knuckle Radius	Elliptical Ratio	Conical Apex Angle	Hemispherical Radius	Flat Diameter	Side to Press. (Conv. or Conc.)
(a)								
(b)								

If removable, bolts used _____ (Material, Spec. No., T.S., Size, Number) Other fastening _____ (Describe or attach sketch)

7. Jacket Closure: _____
(Describe as edge and weld, bar, etc. If bar give dimensions, if bolted, describe or sketch)

8. Design pressure[2] 1250 psi at 575 °F

Drop Weight _____
Charpy Impact _____ ft-lb
at temp. of _____ °F

Items 9 and 10 to be completed for tube sections.

9. Tube Sheets: Stationary. Material _____ (Kind & Spec. No.) Dia. _____ (Subject to pressure) Thickness ____ in. Attachment _____ (Welded, Bolted)

Floating. Material _____ Dia. _____ Thickness ____ in. Attachment _____

10. Tubes: Material _____ O.D. ____ in. Thickness _____ inches or gage. Number _____ Type _____ (Str. or U)

Items 11–14 incl. to be completed for inner chambers of jacketed vessels, or channels of heat exchangers.

11. Shell: Material _____ T.S. _____ Nominal Thickness ____ in. Corrosion Allowance ____ in. Dia. ____ ft. ____ in. Length ____ ft. ____ in.
(Kind & Spec. No.) (Min. of Range Specified)

12. Seams: Long _____ H.T.[1] _____ R.T. _____ Efficiency _____ %

Girth _____ H.T.[1] _____ R.T. _____ No. of Courses _____

13. Heads: (a) Material _____ T.S. _____ (b) Material _____ T.S. _____

Location	Thickness	Crown Radius	Knuckle Radius	Elliptical Ratio	Conical Apex Angle	Hemispherical Radius	Flat Diameter	Side to Press. (Conv. or Conc.)
(a) Top, bottom, ends								
(b) Channel								

If removable, bolts used (a) _____ (b) _____ (c) _____ Other fastening _____ (Describe or attach sketch)

14. Design pressure[2] _____ psi at _____ °F

Drop Weight _____
Charpy Impact _____ ft-lb
at temp. of _____ °F

Items below to be completed for all vessels where applicable.

15. Safety Valve Outlets: Number _____ Size _____ Location _____

16. Nozzles:

Purpose (Inlet, Outlet, Drain)	Number	Dia. or Size	Type	Material	Thickness	Reinforcement Material	How Attached

17. Inspection Openings: Manholes, No. _____ Size _____ Location _____
Handholes, No. _____ Size _____ Location _____
Threaded, No. _____ Size _____ Location _____

18. Supports: Skirt _____ (Yes or No) Lugs _____ (Number) Legs _____ (Number) Other _____ (Describe) Attached _____ (Where & How)

[1] If Postweld Heat-Treated.
[2] List other internal or external pressure with coincident temperature when applicable.

FORM N-2 NPT CERTIFICATE HOLDERS' DATA REPORT FOR NUCLEAR PART AND APPURTENANCES*

As required by the Provision of the ASME Code Rules, Section III, Div. 1 (ID) 1813-037 SHT 10 of 46

1. (a) Manufactured by General Electric Company, Castle Hayne Rd., Wilmington, N.C.
(Name and address of NPT Certificate Holder)

(b) Manufactured for General Electric Company, San Jose, California (NEBG)
(Name and address of N Certificate Holder for completed nuclear component)

2. Identification-Certificate Holder's Serial No. of Part A3990 Nat'l Bd. No. _____

(a) Constructed According to Drawing No. 768E534G001 Drawing Prepared by D. L. Peterson

(b) Description of Part Inspected Control Rod Drive, Model #7RDB144DG001

(c) Applicable ASME Code: Section III, Edition 1974, Addenda date W'75, Case No. N207 1361-2 Class 1

1. Cap 166B9274P1
(167A2343)
SA182 - F316
3/8 thick x 1 1/16 OD

2. Indicator Pipe 166B9313P1
SA312-TP316
3/4 sch 40-seamless pipe
0.113 wall thickness
1.065 max. dia.

3. Plug 159A1176P1
SA182-F304
1/4 thick x 0.812 OD

4. Flange 919D610P1 (719E474)
SA182-F304
3.37 thick x 9 5/8 OD
neck 1 1/16 thick x 5.0 OD
2.875 ID

5. Base 137C5311P1
XM-19 ASME SA479
3.0 OD x .884 ID

6. Ring Flange 114B5122P2
SA182-F304
1" thick x 5.0 OD x 1.75 ID

7. Cap Screw 117C4516P2
SA193-86
6 ea. 1/2 dia. on 4 1/8 bolt circle

8. Plug 175A7961P1
SA182-F304
0.38 thick x 1.307 dia.

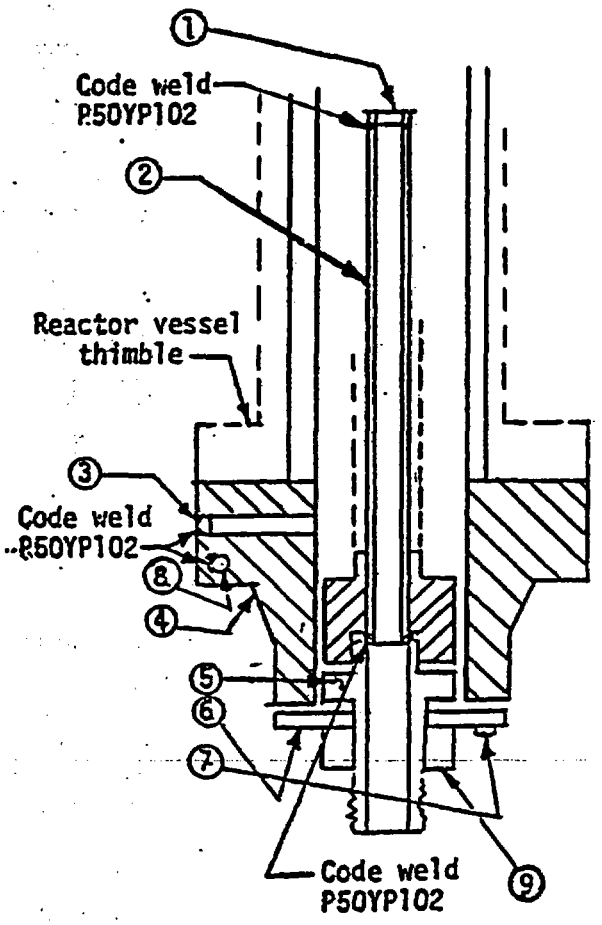

CONTROL ROD DRIVE
DWG - 768E534

9. Nut 137C5934P1
XM-19 SA479
1.30 thick x 2.62 dia.

00129

FORM N-2 NPT CERTIFICATE HOLDERS' DATA REPORT FOR NUCLEAR PART AND APPURTENANCES

As required by the Provision of the ASME Code Rules. Section III. Div. 1 1B13-037 SHT. 11 of 46

1. (a) Manufactured by General Electric Company, Castle Hayne Rd., Wilmington, N.C.
(Name and address of NPT Certificate Holder)

(b) Manufactured for General Electric Company, San Jose, California (NEBG)
(Name and address of N Certificate Holder for completed nuclear component)

2. Identification-Certificate Holder's Serial No. of Part A2468 Nat'l Bd. No.

(a) Constructed According to Drawing No. 768E534G001 Drawing Prepared by D. L. Peterson

(b) Description of Part Inspected Control Rod Drive, Model #7RDB144DG001

(c) Applicable ASME Code: Section III, Edition 1974, Addenda date W'75, Case No. N207 1361-2 Class 1

3. Remarks: Standard part for use with Reactor. Hydrostatically tested at 1820 psi.
(Brief description of service for which component was designed)

* Total number of sheets - 2

We certify that the statements made in this report are correct and this vessel part or appurtenance as defined in the Code conforms to the rules of construction of the ASME Code Section III.
(The applicable Design Specification and Stress Report are not the responsibility of the NPT Certificate Holder for parts. An NPT Certificate Holder for appurtenances is responsible for furnishing a separate Design Specification and Stress Report if the appurtenance is not included in the component Design Specification and Stress Report.)

12/30 19 80 Signed GE, NEPD-WMD-QA By
(NPT Certificate Holder)

Certificate of Authorization Expires June 16, 1981 Certificate of Authorization No. NPT N-1151

CERTIFICATION OF DESIGN FOR APPURTENANCE (when applicable)

Design information on file at GE, NEPD-WMD-QA, Castle Hayne Rd., Wilmington, N.C.
22A5556, Rev. 1

Stress analysis report on file at GE, NEPD-WMD-QA, Castle Hayne Rd., Wilmington, N.C.
22A4912, Rev. 2

Design specifications certified by B. N. Sridhar Prof. Eng. State Calif Reg. No. 18345

Stress analysis report certified by B. N. Sridhar Prof. Eng. State Calif Reg. No. 18345

CERTIFICATE OF SHOP INSPECTION

I, the undersigned, holding a valid commission issued by the National Board of Boiler and Pressure Vessel Inspectors and/or the State or Province of North Carolina and employed by Department of Labor of State of North Carolina have inspected the part of a pressure vessel described in this Partial Data Report on 12/30 19 80 and state that to the best of my knowledge and belief, the NPT Certificate Holder has constructed this part in accordance with the ASME Code Section III.

By signing this certificate, neither the inspector nor his employer makes any warranty, expressed or implied, concerning the part described in this Partial Data Report. Furthermore, neither the inspector nor his employer shall be liable in any manner for any personal injury or property damage or a loss of any kind arising from or connected with this inspection.

Date 12/30 19 80

Inspector's Signature

Commissions NC 77S,PA.WC2L60, OHIO
National Board, State, Province and No.

*Supplemental sheets in form of lists, sketches or drawings may be used provided (1) size is 8½" x 11", (2) information in items 1-3 on this Data Report is included on each sheet, and (3) each sheet is numbered and number of sheets is entered in item 3, "Remarks"

0008

(10/77) This form (E00040) may be obtained from the Order Dept., ASME, 345 E. 47th St., New York, N.Y. 10017

FORM N-2 (back)

Items 4–8 incl. to be completed for single wall vessels, jackets of jacketed vessels, or shells of heat exchangers.

4. Shell: Material ____ (Kind & Spec. No.) ____ T.S. ____ (Min. of Range Specified) Nominal Thickness ____ in. Corrosion Allowance ____ in. Dia. ____ ft. ____ in. Length ____ ft. ____ in.

5. Seams: Long ____ H.T.[1] ____ R.T. ____ Efficiency ____ %

Girth ____ H.T.[1] ____ R.T. ____ No. of Courses ____

6. Heads: (a) Material ____ T.S. ____ (b) Material ____ T.S. ____

Location (Top, bottom, ends)	Thickness	Crown Radius	Knuckle Radius	Elliptical Ratio	Conical Apex Angle	Hemispherical Radius	Flat Diameter	Side to Press. (Conv. or Conc.)
(a)								
(b)								

If removable, bolts used ____ (Material, Spec. No., T.S., Size, Number) Other fastening ____ (Describe or attach sketch)

7. Jacket Closure: ____ (Describe as ogee and weld, bar, etc. If bar give dimensions, if bolted, describe or sketch)

8. Design pressure[2] 1250 psi at 575 °F

Drop Weight ____
Charpy Impact ____ ft-lb
at temp. of ____ °F

Items 9 and 10 to be completed for tube sections

9. Tube Sheets: Stationary. Material ____ (Kind & Spec. No.) Dia. ____ (Subject to pressure) Thickness ____ in. Attachment ____ (Welded, Bolted)

Floating. Material ____ Dia. ____ Thickness ____ in. Attachment ____

10. Tubes: Material ____ O.D. ____ in. Thickness ____ inches or gage. Number ____ Type ____ (Str. or U)

Items 11–14 incl. to be completed for inner chambers of jacketed vessels, or channels of heat exchangers.

11. Shell: Material ____ (Kind & Spec. No.) T.S. ____ (Min. of Range Specified) Nominal Thickness ____ in. Corrosion Allowance ____ in. Dia. ____ ft. ____ in. Length ____ ft. ____ in.

12. Seams: Long ____ H.T.[1] ____ R.T. ____ Efficiency ____ %

Girth ____ H.T.[1] ____ R.T. ____ No. of Courses ____

13. Heads (a) Material ____ T.S. ____ (b) Material ____ T.S. ____

Location	Thickness	Crown Radius	Knuckle Radius	Elliptical Ratio	Conical Apex Angle	Hemispherical Radius	Flat Diameter	Side to Press. (Conv. or Conc.)
(a) Top, bottom, ends								
(b) Channel								

If removable, bolts used (a) ____ (b) ____ (c) ____ Other fastening ____ (Describe or attach sketch)

14. Design pressure[2] ____ psi at ____ °F

Drop Weight ____
Charpy Impact ____ ft-lb
at temp. of ____ °F

Items below to be completed for all vessels where applicable.

15. Safety Valve Outlets: Number ____ Size ____ Location ____

16. Nozzles:

Purpose (Inlet, Outlet, Drain)	Number	Dia. or Size	Type	Material	Thickness	Reinforcement Material	How Attached

17. Inspection Openings: Manholes, No. ____ Size ____ Location ____
Handholes, No. ____ Size ____ Location ____
Threaded, No. ____ Size ____ Location ____

18. Supports: Skirt ____ (Yes or No) Lugs ____ (Number) Legs ____ (Number) Other ____ (Describe) Attached ____ (Where & How)

[1] If Postweld Heat-Treated.
[2] List other internal or external pressure with corresponding temperature when applicable.

FORM N-2 NPT CERTIFICATE HOLDERS' DATA REPORT FOR NUCLEAR PART AND APPURTENANCES

As required by the Provision of the ASME Code Rules. Section III. Div. 1

1 B13-037
SH. 12 of 46

1. (a) Manufactured by General Electric Company, Castle Hayne Rd., Wilmington, N.C.
(Name and address of NPT Certificate Holder)

(b) Manufactured for General Electric Company, San Jose, California (NEBG)
(Name and address of N Certificate Holder for completed nuclear component)

2. Identification-Certificate Holder's Serial No. of Part A2468 Nat'l Bd. No.

(a) Constructed According to Drawing No. 768E534G001 Drawing Prepared by D. L. Peterson

(b) Description of Part Inspected Control Rod Drive, Model #7RDB144DG001

(c) Applicable ASME Code: Section III, Edition 1974, Addenda date W'75 Case No. N207 1361-2 Class 1

1. Cap 166B9274P1
(167A2343)
SA182 - F316
3/8 thick x 1 1/16 OD

2. Indicator Pipe 166B9313P1
SA312-TP316
3/4 sch 40-seamless pipe
0.113 wall thickness
1.065 max. dia.

3. Plug 159A1176P1
SA182-F304
1/4 thick x 0.812 OD

4. Flange 919D610P1 (719E474)
SA182-F304
3.37 thick x 9 5/8 OD
neck 1 1/16 thick x 5.0 OD
2.875 ID

5. Base 137C5311P1
XM-19 ASME SA479
3.0 OD x .884 ID

6. Ring Flange 114B5122P2
SA182-F304
1" thick x 5.0 OD x 1.75 ID

7. Cap Screw 117C4516P2
SA193-B6
6 ea. 1/2 dia. on 4 1/8 bolt circle

8. Plug 175A7961P1
SA182-F304
0.38 thick x 1.307 dia.

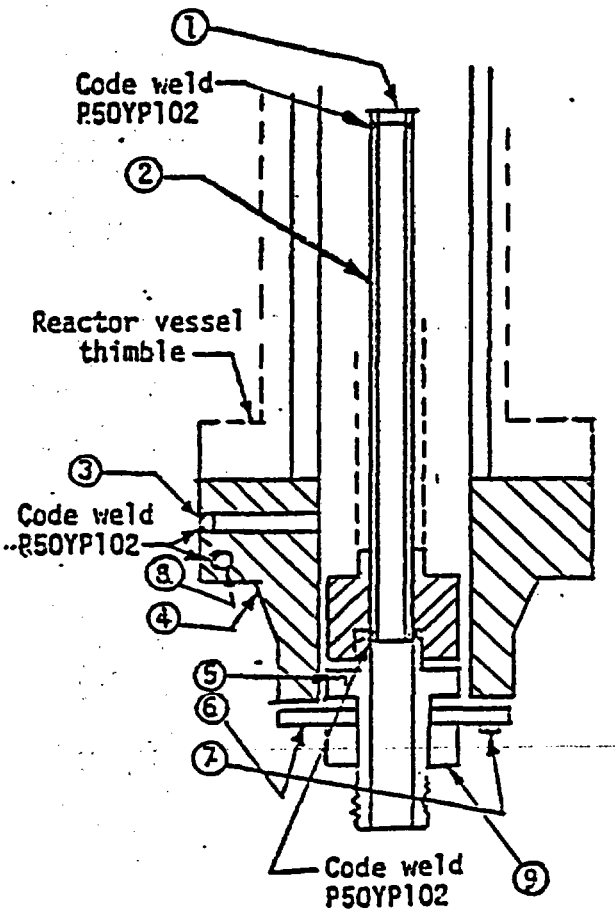

CONTROL ROD DRIVE
DWG - 768E534

9. Nut 137C5934P1
XM-19 SA479
1.30 thick x 2.62 dia.

00084

REEL 12016/410

Sheet 1 of 2

FORM N-2 NPT CERTIFICATE HOLDERS' DATA REPORT FOR NUCLEAR PART AND APPURTENANCES*
As required by the Provision of the ASME Code Rules, Section III, Div. 1

1613-037
MR 28194 SHT 13 of 46

1. (a) Manufactured by General Electric Company, Castle Hayne Rd., Wilmington, N.C.
(Name and address of NPT Certificate Holder)

(b) Manufactured for General Electric Company, San Jose, California (NEBG)
(Name and address of N Certificate Holder for completed nuclear component)

2. Identification-Certificate Holder's Serial No. of Part A5283 Nat'l Bd. No.

(a) Constructed According to Drawing No. 768E534G001 Drawing Prepared by D. L. Paterson

(b) Description of Part Inspected Control Rod Drive, Model #7RDB144DG001

(c) Applicable ASME Code: Section III, Edition 1974, Addenda date W'75, Case No. N207 1361-2 Class 1

3. Remarks: Standard part for use with Reactor. Hydrostatically tested at 1820 psi.
(Brief description of service for which component was designed)

* Total number of sheets - 2

We certify that the statements made in this report are correct and this vessel part or appurtenance as defined in the Code conforms to the rules of construction of the ASME Code Section III.
(The applicable Design Specification and Stress Report are not the responsibility of the NPT Certificate Holder for parts. An NPT Certificate Holder for appurtenances is responsible for furnishing a separate Design Specification and Stress Report if the appurtenance is not included in the component Design Specification and Stress Report.)

Date 2/24 19 83 Signed GE, NEPD-WMD- (NPT Certificate Holder) By J. C. Stroedemann

Certificate of Authorization Expires June 16, 1984 Certificate of Authorization No. NPT N-1151

CERTIFICATION OF DESIGN FOR APPURTENANCE (when applicable)

Design information on file at GENERAL ELECTRIC CO., SAN JOSE, CALIFORNIA
22A5556, Rev. 2

Stress analysis report on file at GENERAL ELECTRIC CO., SAN JOSE, CALIFORNIA
22A4912, Rev. 2

Design specifications certified by B. N. Sridhar Prof. Eng. State Calif Reg. No. 18345

Stress analysis report certified by B. N. Sridhar Prof. Eng. State Calif Reg. No. 18345

CERTIFICATE OF SHOP INSPECTION

I, the undersigned, holding a valid commission issued by the National Board of Boiler and Pressure Vessel Inspectors and/or the State or Province of North Carolina and employed by Department of Labor of State of North Carolina have inspected the part of a pressure vessel described in this Partial Data Report on 2/24 19 83 and state that to the best of my knowledge and belief, the NPT Certificate Holder has constructed this part in accordance with the ASME Code Section III.

By signing this certificate, neither the Inspector nor his employer makes any warranty, expressed or implied, concerning the part described in this Partial Data Report. Furthermore, neither the Inspector nor his employer shall be liable in any manner for any personal injury or property damage or a loss of any kind arising from or connected with this inspection.

Date 2/24 19 83

Ed Sherrill
Inspector's Signature

Commissions N.C. 723, PA WC1766, OHIO 1
National Board, State, Province and No.

RAF 5-22-87

*Supplemental sheets in form of lists, sketches or drawings may be used provided (1) size is 8½" x 11", (2) information in items 1-2 on this Data Report is included on each sheet, and (3) each sheet is numbered and number of sheets is recorded in item 3, "Remarks".

C3-12

(10/77) This form (E00040) may be obtained from the Order Dept., ASME, 345 E. 47th St., New York, N.Y. 10017

FORM N-2 (back)

Items 4–8 incl. to be completed for single wall vessels, jackets of jacketed vessels, or shells of heat exchangers.

4. Shell: Material _____ (Kind & Spec. No.) T.S. _____ (Min. of Range Specified) Nominal Thickness ____ in. Corrosion Allowance ____ in. Dia. ____ ft. ____ in. Length ____ ft. ____ in.

5. Seams: Long _____ H.T.[1] _____ R.T. _____ Efficiency _____ %

Girth _____ H.T.[1] _____ R.T. _____ No. of Courses _____

6. Heads: (a) Material _____ T.S. _____ (b) Material _____ T.S. _____

Location (Top, bottom, ends)	Thickness	Crown Radius	Knuckle Radius	Elliptical Ratio	Conical Apex Angle	Hemispherical Radius	Flat Diameter	Side to Press. (Conv. or Conc.)
(a)								
(b)								

If removable, bolts used _____ (Material, Spec. No., T.S., Size, Number) Other fastening _____ (Describe or attach sketch)

7. Jacket Closure: _____ (Describe as edge and weld, bar, etc. If bar give dimensions, if bolted, describe or sketch)

8. Design pressure[1] 1250 psi at 575 °F

Drop Weight _____
Charpy Impact _____ ft-lb
at temp. of _____ °F

Items 9 and 10 to be completed for tube sections.

9. Tube Sheets: Stationary, Material _____ (Kind & Spec. No.) Dia. _____ (Subject to pressure) Thickness ____ in. Attachment _____ (Welded, Bolted)

Floating. Material _____ Dia. _____ Thickness ____ in. Attachment _____

10. Tubes: Material _____ O.D. ____ in. Thickness _____ inches or gage. Number _____ Type _____ (Str. or U)

Items 11–14 incl. to be completed for inner chambers of jacketed vessels, or channels of heat exchangers.

11. Shell: Material _____ (Kind & Spec. No.) T.S. _____ (Min. of Range Specified) Nominal Thickness ____ in. Corrosion Allowance ____ in. Dia. ____ ft. ____ in. Length ____ ft. ____ in.

12. Seams: Long _____ H.T.[1] _____ R.T. _____ Efficiency _____ %

Girth _____ H.T.[1] _____ R.T. _____ No. of Courses _____

13. Heads: (a) Material _____ T.S. _____ (b) Material _____ T.S. _____

Location	Thickness	Crown Radius	Knuckle Radius	Elliptical Ratio	Conical Apex Angle	Hemispherical Radius	Flat Diameter	Side to Press. (Conv. or Conc.)
(a) Top, bottom, ends								
(b) Channel								

If removable, bolts used (a) _____ (b) _____ (c) _____ Other fastening _____ (Describe or attach sketch)

14. Design pressure[1] _____ psi at _____ °F

Drop Weight _____
Charpy Impact _____ ft-lb
at temp. of _____ °F

Items below to be completed for all vessels where applicable.

15. Safety Valve Outlets: Number _____ Size _____ Location _____

16. Nozzles:

Purpose (Inlet, Outlet, Drain)	Number	Dia. or Size	Type	Material	Thickness	Reinforcement Material	How Attached

17. Inspection Openings: Manholes, No. _____ Size _____ Location _____
Handholes, No. _____ Size _____ Location _____
Threaded, No. _____ Size _____ Location _____

18. Supports: Skirt _____ (Yes or No) Lugs _____ (Number) Legs _____ (Number) Other _____ (Describe) Attached _____ (Where & How)

Sheet 2 of 2

FORM N-2 NPT CERTIFICATE HOLDERS' DATA REPORT FOR NUCLEAR PART AND APPURTENANCES*
*As required by the Provision of the ASME Code Rules, Section III, Div. 1

1813-037
MR 2817 SHT. 14 OF 46

1. (a) Manufactured by General Electric Company, Castle Hayne Rd., Wilmington, N.C.
(Name and address of NPT Certificate Holder)

(b) Manufactured for General Electric Company, San Jose, California (NEBG)
(Name and address of N Certificate Holder for completed nuclear component)

2. Identification-Certificate Holder's Serial No. of Part A5283 Nat'l Bd. No.

(a) Constructed According to Drawing No. 768E534G001 Drawing Prepared by D. L. Peterson

(b) Description of Part Inspected Control Rod Drive, Model #7RDB144DG001

(c) Applicable ASME Code: Section III, Edition 1974, Addenda date W'75 Case No. N207 1361-2 Class 1

1. Cap 166B9274P1
(167A2343)
SA182 - F316
3/8 thick x 1 1/16 OD

2. Indicator Pipe 166B9313P1
SA312-TP316
3/4 sch 40-seamless pipe
0.113 wall thickness
1.065 max. dia.

3. Plug 159A1176P1
SA182-F304
1/4 thick x 0.812 OD

4. Flange 919D610P1 (719E474)
SA182-F304
3.37 thick x 9 5/8 OD
neck 1 1/16 thick x 5.0 OD
2.875 ID

5. Base 137C5311P1
XM-19 ASME SA479
3.0 OD x .884 ID

6. Ring Flange 114B5122P2
SA182-F304
1" thick x 5.0 OD x 1.75 ID

7. Cap Screw 117C4516P2
SA193-B6
6 ea. 1/2 dia. on 4 1/8 bolt circle

8. Plug 175A7961P1
SA182-F304
0.38 thick x 1.307 dia.

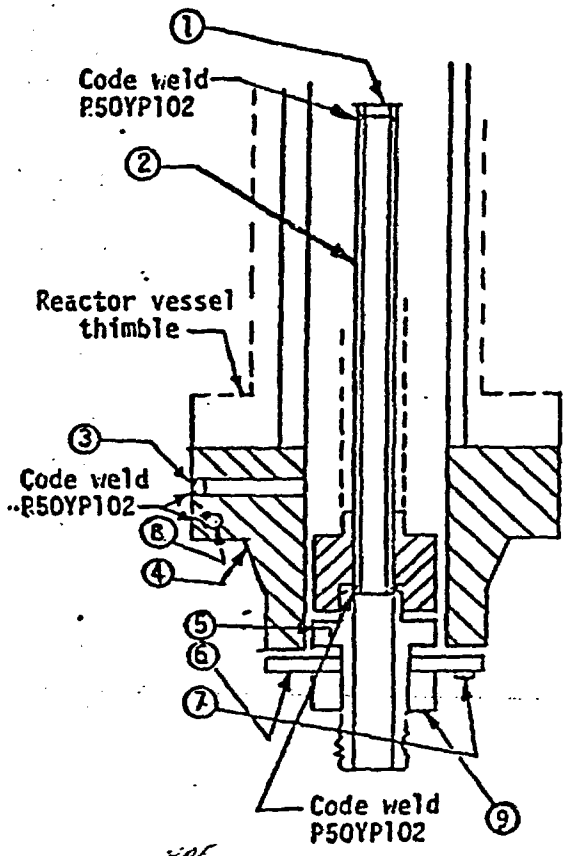

KAF 5-22-67

CONTROL ROD DRIVE
DWG - 768E534

0343

9. Nut 137C5934P1
XM-19 SA479
1.30 thick x 2.62 dia.

FORM N-2 NPT CERTIFICATE HOLDERS' DATA REPORT FOR NUCLEAR PART AND APPURTENANCES*

As required by the Provision of the ASME Code Rules. Section III. Div. 1

1818-037 SAT 15 of 46

1. (a) Manufactured by General Electric Company, Castle Hayne Rd., Wilmington, N.C.
(Name and address of NPT Certificate Holder)

(b) Manufactured for General Electric Company, San Jose, California (NEBG)
(Name and address of N Certificate Holder for completed nuclear component)

2. Identification-Certificate Holder's Serial No. of Part A3703 Nat'l Bd. No.

(a) Constructed According to Drawing No. 768E534G001 Drawing Prepared by D. L. Peterson

(b) Description of Part Inspected Control Rod Drive, Model #7RDB144DG001

(c) Applicable ASME Code: Section III, Edition 1974, Addenda date W'75, Case No. N207 1361-2 Class 1

3. Remarks: Standard part for use with Reactor. Hydrostatically tested at 1820 psi.
(Brief description of service for which component was designed)

* Total number of sheets - 2

We certify that the statements made in this report are correct and this vessel part or appurtenance as defined in the Code conforms to the rules of construction of the ASME Code Section III.
(The applicable Design Specification and Stress Report are not the responsibility of the NPT Certificate Holder for parts. An NPT Certificate Holder for appurtenances is responsible for furnishing a separate Design Specification and Stress Report if the appurtenance is not included in the component Design Specification and Stress Report.)

Date 7/23 19 81 Signed GE, NEPD-WMD-QA (NPT Certificate Holder) By J. Stroedemann

Certificate of Authorization Expires September 15, 1981 Certificate of Authorization No. NPT N-1151

CERTIFICATION OF DESIGN FOR APPURTENANCE (when applicable)

Design information on file at GE, NEPD-WMD-QA, Castle Hayne Rd., Wilmington, N.C.
22A5556, Rev. 2

Stress analysis report on file at GE, NEPD-WMD-QA, Castle Hayne Rd., Wilmington, N.C.
22A4912, Rev. 2

Design specifications certified by B. N. Sridhar Prof. Eng. State Calif Reg. No. 18345

Stress analysis report certified by B. N. Sridhar Prof. Eng. State Calif Reg. No. 18345

CERTIFICATE OF SHOP INSPECTION

I, the undersigned, holding a valid commission issued by the National Board of Boiler and Pressure Vessel Inspectors and/or the State or Province of North Carolina and employed by Department of Labor of State of North Carolina have inspected the part of a pressure vessel described in this Partial Data Report on 7/23 19 81, and state that to the best of my knowledge and belief, the NPT Certificate Holder has constructed this part in accordance with the ASME Code Section III.

By signing this certificate, neither the Inspector nor his employer makes any warranty, expressed or implied, concerning the part described in this Partial Data Report. Furthermore, neither the Inspector nor his employer shall be liable in any manner for any personal injury or property damage or a loss of any kind arising from or connected with this inspection.

Date 7/23 19 81

E. L. Merrill
Inspector's Signature

Commissions N.C. 723, PA.WC1766, OHIO
National Board, State, Province and No.

00158

*Supplemental sheets in form of lists, sketches or drawings may be used provided: (1) size is 8½" x 11", (2) information in items 1-3 on this Data Report is included on each sheet, and (3) each sheet is numbered and number of sheets is recorded in item 3, "Remarks"

(10/77) This form (E00040) may be obtained from the Order Dept., ASME, 345 E. 47th St., New York, N.Y. 10017

FORM N-2 (back)

Items 4–8 incl. to be completed for single wall vessels, jackets of jacketed vessels, or shells of heat exchangers.

4. Shell: Material ____ (Kind & Spec. No.) ____ T.S. ____ (Min. of Range Specified) Nominal Thickness ____ in. Corrosion Allowance ____ in. Dia. ____ ft. ____ in. Length ____ ft. ____ in.

5. Seams: Long ____ H.T.[1] ____ R.T. ____ Efficiency ____ %

Girth ____ H.T.[1] ____ R.T. ____ No. of Courses ____

6. Heads: (a) Material ____ T.S. ____ (b) Material ____ T.S. ____

Location (Top, bottom, ends)	Thickness	Crown Radius	Knuckle Radius	Elliptical Ratio	Conical Apex Angle	Hemispherical Radius	Flat Diameter	Side to Press. (Conv. or Conc.)
(a)								
(b)								

If removable, bolts used ____ (Material, Spec. No., T.S., Size, Number) Other fastening ____ (Describe or attach sketch)

7. Jacket Closure: ____ (Describe as edge and weld, bar, etc. If bar give dimensions, if bolted, describe or sketch)

8. Design pressure[2] 1250 psi at 575 °F Drop Weight ____ Charpy Impact ____ ft-lb at temp. of ____ °F

Items 9 and 10 to be completed for tube sections

9. Tube Sheets: Stationary. Material ____ (Kind & Spec. No.) Dia. ____ (Subject to pressure) Thickness ____ in. Attachment ____ (Welded, Bolted)

Floating. Material ____ Dia. ____ Thickness ____ in. Attachment ____

10. Tubes: Material ____ O.D. ____ in. Thickness ____ inches or gage. Number ____ Type ____ (Str. or U)

Items 11–14 incl. to be completed for inner chambers of jacketed vessels, or channels of heat exchangers.

11. Shell: Material ____ (Kind & Spec. No.) T.S. ____ (Min. of Range Specified) Nominal Thickness ____ in. Corrosion Allowance ____ in. Dia. ____ ft. ____ in. Length ____ ft. ____ in.

12. Seams: Long ____ H.T.[1] ____ R.T. ____ Efficiency ____ %

Girth ____ H.T.[1] ____ R.T. ____ No. of Courses ____

13. Heads (a) Material ____ T.S. ____ (b) Material ____ T.S. ____

Location	Thickness	Crown Radius	Knuckle Radius	Elliptical Ratio	Conical Apex Angle	Hemispherical Radius	Flat Diameter	Side to Press. (Conv. or Conc.)
(a) Top, bottom, ends								
(b) Channel								

If removable, bolts used (a) ____ (b) ____ (c) ____ Other fastening ____ (Describe or attach sketch)

14. Design pressure[2] ____ psi at ____ °F Drop Weight ____ Charpy Impact ____ ft-lb at temp. of ____ °F

Items below to be completed for all vessels where applicable.

15. Safety Valve Outlets: Number ____ Size ____ Location ____

16. Nozzles:

Purpose (Inlet, Outlet, Drain)	Number	Dia. or Size	Type	Material	Thickness	Reinforcement Material	How Attached

17. Inspection Openings: Manholes, No. ____ Size ____ Location ____
Handholes, No. ____ Size ____ Location ____
Threaded, No. ____ Size ____ Location ____

18. Supports: Skirt ____ (Yes or No) Lugs ____ (Number) Legs ____ (Number) Other ____ (Describe) Attached ____ (Where & How)

[1] If Postweld Heat-Treated.
[2] Set other internal or external pressure with corresponding temperature when applicable.

FORM N-2 NPT CERTIFICATE HOLDERS' DATA REPORT FOR NUCLEAR PART AND APPURTENANCES*

As required by the Provision of the ASME Code Rules, Section III, Div. 1 ~~1B37-037~~ 1B13-037, SHT- 16 OF 46

1. (a) Manufactured by General Electric Company, Castle Hayne Rd., Wilmington, N.C.
(Name and address of NPT Certificate Holder)

(b) Manufactured for General Electric Company, San Jose, California (NEBG)
(Name and address of N Certificate Holder for completed nuclear component)

2. Identification-Certificate Holder's Serial No. of Part A3703 Nat'l Bd. No. _____

(a) Constructed According to Drawing No. 768E534G001 Drawing Prepared by D. L. Peterson

(b) Description of Part Inspected Control Rod Drive, Model #7RDB144DG001

(c) Applicable ASME Code: Section III, Edition 1974, Addenda date W'75, Case No. N207 1361-2 Class 1

1. Cap 166B9274P1
(167A2343)
SA182 - F316
3/8 thick x 1 1/16 OD

2. Indicator Pipe 166B9313P1
SA312-TP316
3/4 sch 40-seamless pipe
0.113 wall thickness
1.065 max. dia.

3. Plug 159A1176P1
SA182-F304
1/4 thick x 0.812 OD

4. Flange 919B610P1 (719E474)
SA182-F304
3.37 thick x 9 5/8 OD
neck 1 1/16 thick x 5.0 OD
2.875 ID

5. Base 137C5311P1
XM-19 ASME SA479
3.0 OD x .884 ID

6. Ring Flange 11485122P2
SA182-F304
1" thick x 5.0 OD x 1.75 ID

7. Cap Screw 117C4516P2
SA193-B6
6 ea. 1/2 dia. on 4 1/8 bolt circle

8. Plug 175A7961P1
SA182-F304
0.38 thick x 1.307 dia.

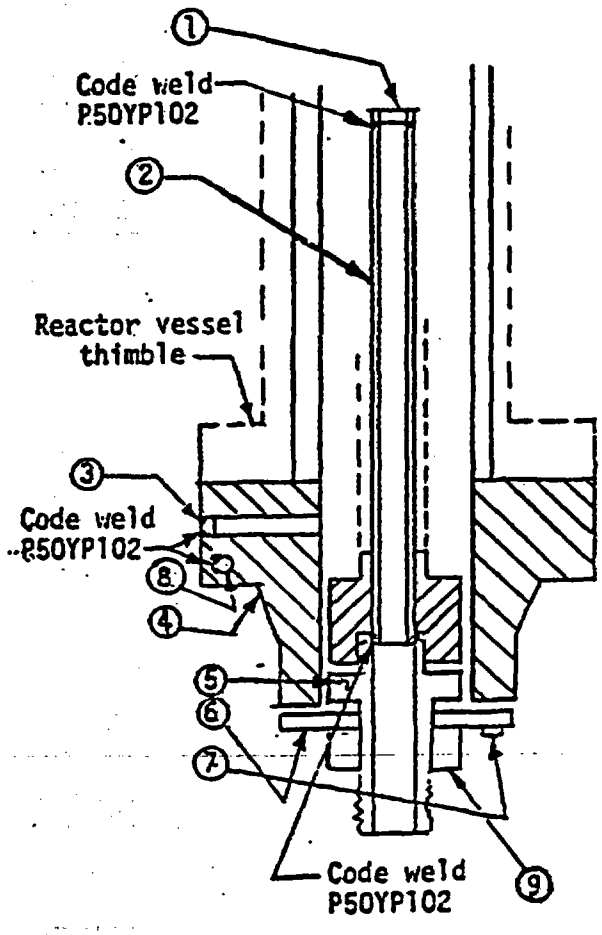

CONTROL ROD DRIVE
DWG - 768E534

9. Nut 137C5934P1
XM-19 SA479
1.30 thick x 2.62 dia.

00159

FORM N-2 NPT CERTIFICATE HOLDERS' DATA REPORT FOR NUCLEAR PART AND APPURTENANCES*
As required by the Provision of the ASME Code Rules, Section III, Div. 1 { 1B13-037 17 of 46 } 16977

1. (a) Manufactured by General Electric Company, Castle Hayne Rd., Wilmington, N.C.
(Name and address of NPT Certificate Holder)

(b) Manufactured for General Electric Company, San Jose, California (NEBG)
(Name and address of N Certificate Holder for completed nuclear component)

2. Identification-Certificate Holder's Serial No. of Part A5154 Nat'l Bd. No. _____

(a) Constructed According to Drawing No. 768E534G001 Drawing Prepared by D. L. Peterson

(b) Description of Part Inspected Control Rod Drive, Model #7RDB144DG001

(c) Applicable ASME Code: Section III, Edition 1974, Addenda date W'75, Case No. N207 1361-2 Class 1

3. Remarks: Standard part for use with Reactor. Hydrostatically tested at 1820 psi.
(Brief description of service for which component was designed)

* Total number of sheets - 2

We certify that the statements made in this report are correct and this vessel part or appurtenance as defined in the Code conforms to the rules of construction of the ASME Code Section III.
(The applicable Design Specification and Stress Report are not the responsibility of the NPT Certificate Holder for parts. An NPT Certificate Holder for appurtenances is responsible for furnishing a separate Design Specification and Stress Report if the appurtenance is not included in the component Design Specification and Stress Report.)

Date 7/7 19 81 Signed GE, NEPD-WMD By J. Ottodenmuri
(NPT Certificate Holder)

Certificate of Authorization Expires September 15, 1981 Certificate of Authorization No. NPT N-1151

CERTIFICATION OF DESIGN FOR APPURTENANCE (when applicable)

Design information on file at GE, NEPD-WMD-OA, Castle Hayne Rd., Wilmington, N.C.
22A5556, Rev. 2

Stress analysis report on file at GE, NEPD, San Jose, Calif.
22A4912, Rev. 2

Design specifications certified by B. N. Sridhar Prof. Eng. State Calif Reg. No. 18345

Stress analysis report certified by B. N. Sridhar Prof. Eng. State Calif Reg. No. 18345

CERTIFICATE OF SHOP INSPECTION

I, the undersigned, holding a valid commission issued by the National Board of Boiler and Pressure Vessel Inspectors and/or the State or Province of North Carolina and employed by Department of Labor of State of North Carolina have inspected the part of a pressure vessel described in this Partial Data Report on 7/7 19 81 and state that to the best of my knowledge and belief, the NPT Certificate Holder has constructed this part in accordance with the ASME Code Section III.

By signing this certificate, neither the Inspector nor his employer makes any warranty, expressed or implied, concerning the part described in this Partial Data Report. Furthermore, neither the Inspector nor his employer shall be liable in any manner for any personal injury or property damage or a loss of any kind arising from or connected with this inspection.

Date 7/7 19 81

Ed Sherrill
Inspector's Signature

Commissions N.C. 723, PA WC1766, OHIO
National Board, State, Province and No.

00145

*Supplemental sheets in form of lists, sketches or drawings may be used provided (1) size is 8½" x 11", (2) information in items 1-2 on this Data Report is included on each sheet, and (3) each sheet is numbered and number of sheets is recorded in item 3, "Remarks".

(10/77) This form (E00040) may be obtained from the Order Dept., ASME, 345 E. 47th St., New York, N.Y. 10017

FORM N-2 (back)

Items 4–8 incl. to be completed for single wall vessels, jackets of jacketed vessels, or shells of heat exchangers.

4. Shell: Material ____ (Kind & Spec. No.) ____ T.S. ____ (Min. of Range Specified) Nominal Thickness ____ in. Corrosion Allowance ____ in. Dia. ____ ft. ____ in. Length ____ ft. ____ in.

5. Seams: Long ____ H.T.[1] ____ R.T. ____ Efficiency ____ %

Girth ____ H.T.[1] ____ R.T. ____ No. of Courses ____

6. Heads: (a) Material ____ T.S. ____ (b) Material ____ T.S. ____

Location (Top, bottom, ends)	Thickness	Crown Radius	Knuckle Radius	Elliptical Ratio	Conical Apex Angle	Hemispherical Radius	Flat Diameter	Side to Press. (Conv. or Conc.)
(a)								
(b)								

If removable, bolts used ____ (Material, Spec. No., T.S., Size, Number) Other fastening ____ (Describe or attach sketch)

7. Jacket Closure: ____ (Describe as ogee and weld, bar, etc. If bar give dimensions, if bolted, describe or sketch)

8. Design pressure[2] 1250 psi at 575 °F Drop Weight ____ Charpy Impact ____ ft-lb at temp. of ____ °F

Items 9 and 10 to be completed for tube sections

9. Tube Sheets: Stationary. Material ____ (Kind & Spec. No.) Dia. ____ (Subject to pressure) Thickness ____ in. Attachment ____ (Welded, Bolted)

Floating. Material ____ Dia. ____ Thickness ____ in. Attachment ____

10. Tubes: Material ____ O.D. ____ in. Thickness ____ inches or gage. Number ____ Type ____ (Str. or U)

Items 11–14 incl. to be completed for inner chambers of jacketed vessels, or channels of heat exchangers.

11. Shell: Material ____ (Kind & Spec. No.) T.S. ____ (Min. of Range Specified) Nominal Thickness ____ in. Corrosion Allowance ____ in. Dia. ____ ft. ____ in. Length ____ ft. ____ in.

12. Seams: Long ____ H.T.[1] ____ R.T. ____ Efficiency ____ %

Girth ____ H.T.[1] ____ R.T. ____ No. of Courses ____

13. Heads (a) Material ____ T.S. ____ (b) Material ____ T.S. ____

Location	Thickness	Crown Radius	Knuckle Radius	Elliptical Ratio	Conical Apex Angle	Hemispherical Radius	Flat Diameter	Side to Press. (Conv. or Conc.)
(a) Top, bottom, ends								
(b) Channel								

If removable, bolts used (a) ____ (b) ____ (c) ____ Other fastening ____ (Describe or attach sketch)

14. Design pressure[2] ____ psi at ____ °F Drop Weight ____ Charpy Impact ____ ft-lb at temp. of ____ °F.

Items below to be completed for all vessels where applicable.

15. Safety Valve Outlets: Number ____ Size ____ Location ____

16. Nozzles:

Purpose (Inlet, Outlet, Drain)	Number	Dia. or Size	Type	Material	Thickness	Reinforcement Material	How Attached

17. Inspection Openings: Manholes, No. ____ Size ____ Location ____
Handholes, No. ____ Size ____ Location ____
Threaded, No. ____ Size ____ Location ____

18. Supports: Skirt ____ (Yes or No) Lugs ____ (Number) Legs ____ (Number) Other ____ (Describe) Attached ____ (Where & How)

[1] If Postweld Heat-Treated.
[2] Give either internal or external pressure with corresponding temperature when applicable.

FORM N-2 NPT CERTIFICATE HOLDERS' DATA REPORT FOR NUCLEAR PART AND APPURTENANCES*

As required by the Provision of the ASME Code Rules, Section III, Div. 1 {1B13-037 18 of 46}

1. (a) Manufactured by General Electric Company, Castle Hayne Rd., Wilmington, N.C.
(Name and address of NPT Certificate Holder)

(b) Manufactured for General Electric Company, San Jose, California (NEBG)
(Name and address of N Certificate Holder for completed nuclear component)

2. Identification-Certificate Holder's Serial No. of Part A5154 Nat'l Bd. No.

(a) Constructed According to Drawing No. 768E534G001 Drawing Prepared by D. L. Peterson

(b) Description of Part Inspected Control Rod Drive, Model #7RDB144DG001

(c) Applicable ASME Code: Section III, Edition 1974, Addenda date W'75, Case No. N207 1361-2 Class 1

1. Cap 166B9274P1
(167A2343)
SA182 - F316
3/8 thick x 1 1/16 OD

2. Indicator Pipe 166B9313P1
SA312-TP316
3/4 sch 40-seamless pipe
0.113 wall thickness
1.065 max. dia.

3. Plug 159A1176P1
SA182-F304
1/4 thick x 0.812 OD

4. Flange 919D610P1 (719E474)
SA182-F304
3.37 thick x 9 5/8 OD
neck 1 1/16 thick x 5.0 OD
2.875 ID

5. Base 137C5311P1
XM-19 ASME SA479
3.0 OD x .884 ID

6. Ring Flange 114B5122P2
SA182-F304
1" thick x 5.0 OD x 1.75 ID

7. Cap Screw 117C4516P2
SA193-B6
6 ea. 1/2 dia. on 4 1/8 bolt circle

8. Plug 175A7961P1
SA182-F304
0.38 thick x 1.307 dia.

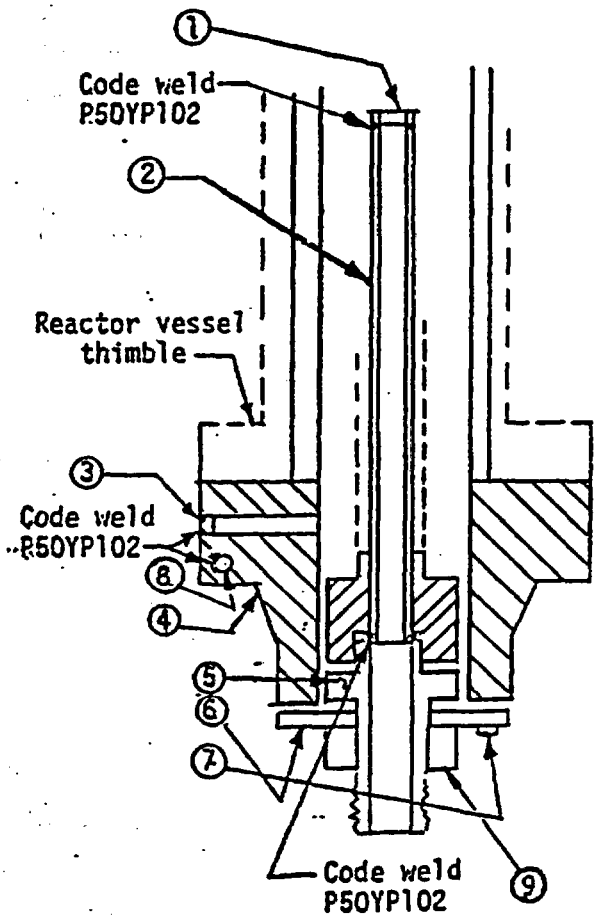

CONTROL ROD DRIVE
DWG - 768E534

9. Nut 137C5934P1
XM-19 SA479
1.30 thick x 2.62 dia.

00146

FORM N-2 NPT CERTIFICATE HOLDERS' DATA REPORT FOR NUCLEAR PART AND APPURTENANCES*

As required by the Provision of the ASME Code Rules, Section III, Div. 1 (1B13-037 19 of 46)

1. (a) Manufactured by General Electric Company, Castle Hayne Rd., Wilmington, N.C.
(Name and address of NPT Certificate Holder)

(b) Manufactured for General Electric Company, San Jose, California (NEBG)
(Name and address of N Certificate Holder for completed nuclear component)

2. Identification-Certificate Holder's Serial No. of Part A2213 Nat'l Bd. No.

(a) Constructed According to Drawing No. 768E534G001 Drawing Prepared by D. L. Peterson

(b) Description of Part Inspected Control Rod Drive, Model #7RDB144DG001

(c) Applicable ASME Code: Section III, Edition 1974, Addenda date W'75, Case No. N207/1361-2 Class 1

3. Remarks Standard part for use with Reactor. Hydrostatically tested at 1820 psi.
(Brief description of service for which component was designed)

* Total number of sheets - 2

We certify that the statements made in this report are correct and this vessel part or appurtenance as defined in the Code conforms to the rules of construction of the ASME Code Section III.
(The applicable Design Specification and Stress Report are not the responsibility of the NPT Certificate Holder for parts. An NPT Certificate Holder for appurtenances is responsible for furnishing a separate Design Specification and Stress Report if the appurtenance is not included in the component Design Specification and Stress Report.)

7/7 19 81 Signed GE, NEPD-WMD By J. Ostrodenmir
(NPT Certificate Holder)

Certificate of Authorization Expires September 15, 1981 Certificate of Authorization No. NPT N-1151

CERTIFICATION OF DESIGN FOR APPURTENANCE (when applicable)

Design information on file at GE, NEPD-WMD-OA, Castle Hayne Rd., Wilmington, N.C.
22A5556, Rev. 2

Stress analysis report on file at GE, NEPD, San Jose, Calif.
22A4912, Rev. 2

Design specifications certified by B. N. Sridhar Prof. Eng. State Calif Reg. No. 18345

Stress analysis report certified by B. N. Sridhar Prof. Eng. State Calif Reg. No. 18345

CERTIFICATE OF SHOP INSPECTION

I, the undersigned, holding a valid commission issued by the National Board of Boiler and Pressure Vessel Inspectors and/or the State or Province of North Carolina and employed by Department of Labor of State of North Carolina have inspected the part of a pressure vessel described in this Partial Data Report on 7/7 19 81 and state that to the best of my knowledge and belief, the NPT Certificate Holder has constructed this part in accordance with the ASME Code Section III.

By signing this certificate, neither the inspector nor his employer makes any warranty, expressed or implied, concerning the part described in this Partial Data Report. Furthermore, neither the inspector nor his employer shall be liable in any manner for any personal injury or property damage or a loss of any kind arising from or connected with this inspection.

Date 7/7 19 81

Ed Sherill
Inspector's Signature

Commissions N.C. 723, PA.WC1766, OHIO
National Board, State, Province and No.

000:

*Supplemental sheets in form of lists, sketches or drawings may be used provided (1) size is 8½" x 11", (2) information in items 1-2 on this Data Report is included on each sheet, and (3) each sheet is numbered and number of sheets is recorded in item 3, "Remarks".

(10/77) This form (E00040) may be obtained from the Order Dept., ASME, 345 E. 47th St., New York, N.Y. 10017

FORM N-2 (back)

Items 4–8 incl. to be completed for single wall vessels, jackets of jacketed vessels, or shells of heat exchangers.

4. Shell: Material _____ T.S. _____ Nominal Thickness ____ in. Corrosion Allowance ____ in. Dia. ____ ft. ____ in. Length ____ ft. ____ in.
(Kind & Spec. No.) (Min. of Range Specified)

5. Seams: Long _____ H.T.[1] _____ R.T. _____ Efficiency _____ %

Girth _____ H.T.[1] _____ R.T. _____ No. of Courses _____

6. Heads: (a) Material _____ T.S. _____ (b) Material _____ T.S. _____

Location (Top, bottom, ends)	Thickness	Crown Radius	Knuckle Radius	Elliptical Ratio	Conical Apex Angle	Hemispherical Radius	Flat Diameter	Side to Press. (Conv. or Conc.)
(a)								
(b)								

If removable, bolts used _____ Other fastening _____
(Material, Spec. No., T.S., Size, Number) (Describe or attach sketch)

7. Jacket Closure: _____
(Describe as open and weld, bar, etc. If bar give dimensions, if bolted, describe or sketch)

8. Design pressure[2] 1250 psi at 575 °F

Drop Weight _____
Charpy Impact _____ ft-lb
at temp. of _____ °F

Items 9 and 10 to be completed for tube sections.

9. Tube Sheets: Stationary. Material _____ Dia. _____ Thickness ____ in. Attachment _____
(Kind & Spec. No.) (Subject to pressure) (Welded, Bolted)

Floating. Material _____ Dia. _____ Thickness ____ in. Attachment _____

10. Tubes: Material _____ O.D. ____ in. Thickness _____ inches or gage. Number _____ Type _____
(Str. or U).

Items 11–14 incl. to be completed for inner chambers of jacketed vessels, or channels of heat exchangers.

11. Shell: Material _____ T.S. _____ Nominal Thickness ____ in. Corrosion Allowance ____ in. Dia. ____ ft. ____ in. Length ____ ft. ____ in.
(Kind & Spec. No.) (Min. of Range Specified)

12. Seams: Long _____ H.T.[1] _____ R.T. _____ Efficiency _____ %

Girth _____ H.T.[1] _____ R.T. _____ No. of Courses _____

13. Heads: (a) Material _____ T.S. _____ (b) Material _____ T.S. _____

Location	Thickness	Crown Radius	Knuckle Radius	Elliptical Ratio	Conical Apex Angle	Hemispherical Radius	Flat Diameter	Side to Press. (Conv. or Conc.)
(a) Top, bottom, ends								
(b) Channel								

If removable, bolts used (a) _____ (b) _____ (c) _____ Other fastening _____
(Describe or attach sketch)

14. Design pressure[2] _____ psi at _____ °F

Drop Weight _____
Charpy Impact _____ ft-lb
at temp. of _____ °F

Items below to be completed for all vessels where applicable.

15. Safety Valve Outlets: Number _____ Size _____ Location _____

16. Nozzles:

Purpose (Inlet, Outlet, Drain)	Number	Dia. or Size	Type	Material	Thickness	Reinforcement Material	How Attached

17. Inspection Openings: Manholes, No. _____ Size _____ Location _____
Handholes, No. _____ Size _____ Location _____
Threaded, No. _____ Size _____ Location _____

18. Supports: Skirt _____ (Yes or No) Lugs _____ (Number) Legs _____ (Number) Other _____ (Describe) Attached _____ (Where & How)

[1] If Postweld Heat-Treated.
[2] List other internal or external pressure with coincident temperature when applicable.

FORM N-2 NPT CERTIFICATE HOLDERS' DATA REPORT FOR NUCLEAR PART AND APPURTENANCES*

As required by the Provision of the ASME Code Rules, Section III, Div. 1 {1B13-037 20 of 46}

1. (a) Manufactured by General Electric Company, Castle Hayne Rd., Wilmington, N.C.
(Name and address of NPT Certificate Holder)

(b) Manufactured for General Electric Company, San Jose, California (NEBG)
(Name and address of N Certificate Holder for completed nuclear component)

2. Identification-Certificate Holder's Serial No. of Part A2213 Nat'l Bd. No.

(a) Constructed According to Drawing No. 768E534G001 Drawing Prepared by D. L. Peterson

(b) Description of Part Inspected Control Rod Drive, Model #7RDB144DG001

(c) Applicable ASME Code: Section III, Edition 1974, Addenda date W'75, Case No. N207 1361-2 Class 1

1. Cap 166B9274P1
(167A2343)
SA182 - F316
3/8 thick x 1 1/16 OD

2. Indicator Pipe 166B9313P1
SA312-TP316
3/4 sch 40-seamless pipe
0.113 wall thickness
1.065 max. dia.

3. Plug 159A1176P1
SA182-F304
1/4 thick x 0.812 OD

4. Flange 919D610P1 (719E474)
SA182-F304
3.37 thick x 9 5/8 OD
neck 1 1/16 thick x 5.0 OD
2.875 ID

5. Base 137C5311P1
XM-19 ASME SA479
3.0 OD x .884 ID

6. Ring Flange 114B5122P2
SA182-F304
1" thick x 5.0 OD x 1.75 ID

7. Cap Screw 117C4516P2
SA193-B6
6 ea. 1/2 dia. on 4 1/8 bolt circle

8. Plug 175A7961P1
SA182-F304
0.38 thick x 1.307 dia.

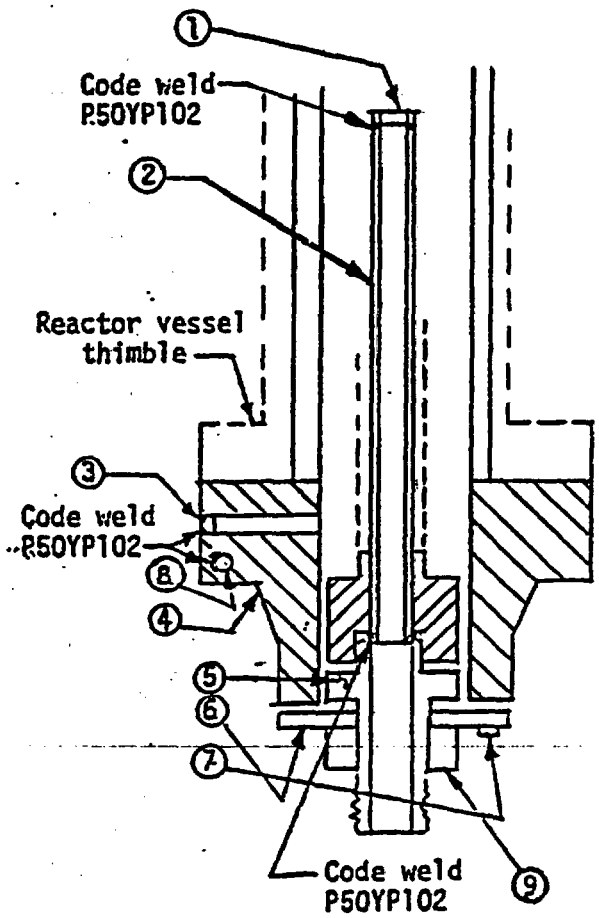

CONTROL ROD DRIVE
DWG - 768E534

9. Nut 137C5934P1
XM-19 SA479
1.30 thick x 2.62 dia.

00039

Sheet 1 of 2

FORM N-2 NPT CERTIFICATE HOLDERS' DATA REPORT FOR NUCLEAR PART AND APPURTENANCES*

As required by the Provision of the ASME Code Rules, Section III, Div. 1 (1B13-037 21 of 46)

1. (a) Manufactured by General Electric Company, Castle Hayne Rd., Wilmington, N.C.
(Name and address of NPT Certificate Holder)

(b) Manufactured for General Electric Company, San Jose, California (NEBG)
(Name and address of N Certificate Holder for completed nuclear component)

2. Identification-Certificate Holder's Serial No. of Part A4434 Nat'l Bd. No.

(a) Constructed According to Drawing No. 768E534G001 Drawing Prepared by D. L. Paterson

(b) Description of Part Inspected Control Rod Drive, Model #7RDB144DG001

(c) Applicable ASME Code: Section III, Edition 1974, Addenda date W'75, Case No. N207 1361-2 Class 1

3. Remarks: Standard part for use with Reactor. Hydrostatically tested at 1820 psi.
(Brief description of service for which component was designed)

* Total number of sheets - 2

We certify that the statements made in this report are correct and this vessel part or appurtenance as defined in the Code conforms to the rules of construction of the ASME Code Section III.
(The applicable Design Specification and Stress Report are not the responsibility of the NPT Certificate Holder for parts. An NPT Certificate Holder for appurtenances is responsible for furnishing a separate Design Specification and Stress Report if the appurtenance is not included in the component Design Specification and Stress Report.)

Date 5/1 19 81 Signed GE, NEPD-WMD-QA By J. Ottredenmuir
(NPT Certificate Holder)

Certificate of Authorization Expires June 16, 1981 Certificate of Authorization No. NPT N-1151

CERTIFICATION OF DESIGN FOR APPURTENANCE (when applicable)

Design information on file at GE, NEPD-WMD-QA, Castle Hayne Rd., Wilmington, N.C.
22A5556, Rev. 1

Stress analysis report on file at GE, NEPD-WMD-QA, Castle Hayne Rd., Wilmington, N.C.
22A4912, Rev. 2

Design specifications certified by B. N. Sridhar Prof. Eng. State Calif Reg. No. 18345

Stress analysis report certified by B. N. Sridhar Prof. Eng. State Calif Reg. No. 18345

CERTIFICATE OF SHOP INSPECTION

I, the undersigned, holding a valid commission issued by the National Board of Boiler and Pressure Vessel Inspectors and/or the State or Province of North Carolina and employed by Department of Labor of State of North Carolina have inspected the part of a pressure vessel described in this Partial Data Report on 5/1 19 81, and state that to the best of my knowledge and belief, the NPT Certificate Holder has constructed this part in accordance with the ASME Code Section III.

By signing this certificate, neither the Inspector nor his employer makes any warranty, expressed or implied, concerning the part described in this Partial Data Report. Furthermore, neither the Inspector nor his employer shall be liable in any manner for any personal injury or property damage or a loss of any kind arising from or connected with this inspection.

Date 5/1 19 81

E R Sherrill
Inspector's Signature

Commissions N.C. 723, PA.WC1766, OHIO
National Board, State, Province and No.

00895

*Supplemental sheets in form of lists, sketches or drawings may be used provided (1) size is 8½" x 11", (2) information in Items 1-2 on this Data Report is included on each sheet, and (3) each sheet is numbered and number of sheets is recorded in Item 3, "Remarks".

(10/77) This form (E00040) may be obtained from the Order Dept., ASME, 345 E. 47th St., New York, N.Y. 10017

FORM N-2 (back)

Items 4–8 incl. to be completed for single wall vessels, jackets of jacketed vessels, or shells of heat exchangers.

4. Shell: Material _____ (Kind & Spec. No.) T.S. _____ (Min. of Range Specified) Nominal Thickness ____ in. Corrosion Allowance ____ in. Dia. ____ ft. ____ in. Length ____ ft. ____ in.

5. Seams: Long _____ H.T.[1] _____ R.T. _____ Efficiency _____ %

Girth _____ H.T.[1] _____ R.T. _____ No. of Courses _____

6. Heads: (a) Material _____ T.S. _____ (b) Material _____ T.S. _____

Location (Top, bottom, ends)	Thickness	Crown Radius	Knuckle Radius	Elliptical Ratio	Conical Apex Angle	Hemispherical Radius	Flat Diameter	Side to Press. (Conv. or Conc.)
(a)								
(b)								

If removable, bolts used _____ (Material, Spec. No., T.S., Size, Number) Other fastening _____ (Describe or attach sketch)

7. Jacket Closure: _____ (Describe as edge and weld, bar, etc. If bar give dimensions, if bolted, describe or sketch)

8. Design pressure[2] 1250 psi at 575 °F

Drop Weight _____
Charpy Impact _____ ft-lb
at temp. of _____ °F

Items 9 and 10 to be completed for tube sections

9. Tube Sheets: Stationary. Material _____ (Kind & Spec. No.) Dia. _____ (Subject to pressure) Thickness ____ in. Attachment _____ (Welded, Bolted)

Floating. Material _____ Dia. _____ Thickness ____ in. Attachment _____

10. Tubes: Material _____ O.D. ____ in. Thickness _____ inches or gage. Number _____ Type _____ (Str. or U)

Items 11–14 incl. to be completed for inner chambers of jacketed vessels, or channels of heat exchangers.

11. Shell: Material _____ (Kind & Spec. No.) T.S. _____ (Min. of Range Specified) Nominal Thickness ____ in. Corrosion Allowance ____ in. Dia. ____ ft. ____ in. Length ____ ft. ____ in.

12. Seams: Long _____ H.T.[1] _____ R.T. _____ Efficiency _____ %

Girth _____ H.T.[1] _____ R.T. _____ No. of Courses _____

13. Heads (a) Material _____ T.S. _____ (b) Material _____ T.S. _____

Location	Thickness	Crown Radius	Knuckle Radius	Elliptical Ratio	Conical Apex Angle	Hemispherical Radius	Flat Diameter	Side to Press. (Conv. or Conc.)
(a) Top, bottom, ends								
(b) Channel								

If removable, bolts used (a) _____ (b) _____ (c) _____ Other fastening _____ (Describe or attach sketch)

14. Design pressure[2] _____ psi at _____ °F

Drop Weight _____
Charpy Impact _____ ft-lb
at temp. of _____ °F

Items below to be completed for all vessels where applicable.

15. Safety Valve Outlets: Number _____ Size _____ Location _____

16. Nozzles:

Purpose (Inlet, Outlet, Drain)	Number	Dia. or Size	Type	Material	Thickness	Reinforcement Material	How Attached

17. Inspection Openings: Manholes, No. _____ Size _____ Location _____
Handholes, No. _____ Size _____ Location _____
Threaded, No. _____ Size _____ Location _____

18. Supports: Skirt _____ (Yes or No) Lugs _____ (Number) Legs _____ (Number) Other _____ (Describe) Attached _____ (Where & How)

[1] If Postweld Heat-Treated.
[2] List other internal or external pressure with coincident temperature when applicable.

FORM N-2 NPT CERTIFICATE HOLDERS' DATA REPORT FOR NUCLEAR PART AND APPURTENANCES*
As required by the Provision of the ASME Code Rules, Section III, Div. 1 {1B13-037 22 of 46}

1. (a) Manufactured by General Electric Company, Castle Hayne Rd., Wilmington, N.C.
(Name and address of NPT Certificate Holder)

(b) Manufactured for General Electric Company, San Jose, California (NEBG)
(Name and address of N Certificate Holder for completed nuclear component)

2. Identification-Certificate Holder's Serial No. of Part A4434 Nat'l Bd. No.

(a) Constructed According to Drawing No. 768E534G001 Drawing Prepared by D. L. Peterson

(b) Description of Part Inspected Control Rod Drive, Model #7RDB144DG001

(c) Applicable ASME Code: Section III, Edition 1974, Addenda date W'75, Case No. N207 1361-2 Class 1

1. Cap 166B9274P1
(167A2343)
SA182 - F316
3/8 thick x 1 1/16 OD

2. Indicator Pipe 166B9313P1
SA312-TP316
3/4 sch 40-seamless pipe
0.113 wall thickness
1.065 max. dia.

3. Plug 159A1176P1
SA182-F304
1/4 thick x 0.812 OD

4. Flange 919D610P1 (719E474)
SA182-F304
3.37 thick x 9 5/8 OD
neck 1 1/16 thick x 5.0 OD
2.875 ID

5. Base 137C5311P1
XM-19 ASME SA479
3.0 OD x .884 ID

6. Ring Flange 114B5122P2
SA182-F304
1" thick x 5.0 OD x 1.75 ID

7. Cap Screw 117C4516P2
SA193-B6
6 ea. 1/2 dia. on 4 1/8 bolt circle

8. Plug 175A7961P1
SA182-F304
0.38 thick x 1.307 dia.

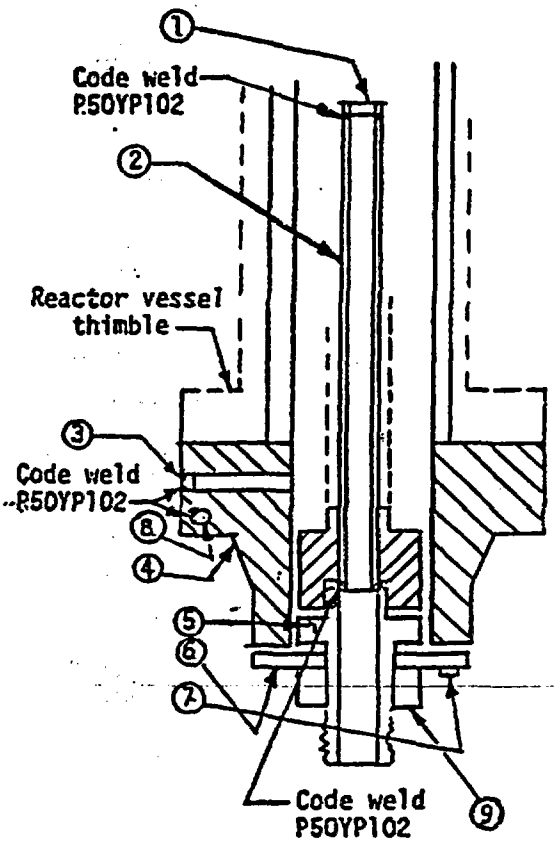

CONTROL ROD DRIVE
DWG - 768E534

9. Nut 137C5934P1
XM-19 SA479
1.30 thick x 2.62 dia.

00896

B13-16977 Sheet 1 of 2

FORM N-2 NPT CERTIFICATE HOLDERS' DATA REPORT FOR NUCLEAR PART AND APPURTENANCES*
As required by the Provision of the ASME Code Rules, Section III, Div. 1 {1B13-037 23 of 46}

1. (a) Manufactured by General Electric Company, Castle Hayne Rd., Wilmington, N.C.
(Name and address of NPT Certificate Holder)

(b) Manufactured for General Electric Company, San Jose, California (NEBG)
(Name and address of N Certificate Holder for completed nuclear component)

2. Identification-Certificate Holder's Serial No. of Part A3551 Nat'l Bd. No.

(a) Constructed According to Drawing No. 768ES34G001 Drawing Prepared by D. L. Paterson

(b) Description of Part Inspected Control Rod Drive, Model #7RDB144DG001

(c) Applicable ASME Code: Section III, Edition 1974, Addenda date W'75, Case No. N207 1361-2 Class 1

3. Remarks: Standard part for use with Reactor. Hydrostatically tested at 1820 psi.
(Brief description of service for which component was designed)

* Total number of sheets - 2

We certify that the statements made in this report are correct and this vessel part or appurtenance as defined in the Code conforms to the rules of construction of the ASME Code Section III.
(The applicable Design Specification and Stress Report are not the responsibility of the NPT Certificate Holder for parts. An NPT Certificate Holder for appurtenances is responsible for furnishing a separate Design Specification and Stress Report if the appurtenance is not included in the component Design Specification and Stress Report.)

Date 7/23 1981 Signed GE, NEPD-WMD-QA (NPT Certificate Holder) By J. Stoudenmire

Certificate of Authorization Expires September 15, 1981 Certificate of Authorization No. NPT N-1151

CERTIFICATION OF DESIGN FOR APPURTENANCE (when applicable)

Design information on file at GE, NEPD-WMD-QA, Castle Hayne Rd., Wilmington, N.C.
22A5556, Rev. 2

Stress analysis report on file at GE, NEPD-WMD-QA, Castle Hayne Rd., Wilmington, N.C.
22A4912, Rev. 2

Design specifications certified by B. N. Sridhar Prof. Eng. State Calif Reg. No. 18345

Stress analysis report certified by B. N. Sridhar Prof. Eng. State Calif Reg. No. 18345

CERTIFICATE OF SHOP INSPECTION

I, the undersigned, holding a valid commission issued by the National Board of Boiler and Pressure Vessel Inspectors and/or the State or Province of North Carolina and employed by Department of Labor of State of North Carolina have inspected the part of a pressure vessel described in this Partial Data Report on 7/23 1981, and state that to the best of my knowledge and belief, the NPT Certificate Holder has constructed this part in accordance with the ASME Code Section III.

By signing this certificate, neither the inspector nor his employer makes any warranty, expressed or implied, concerning the part described in this Partial Data Report. Furthermore, neither the inspector nor his employer shall be liable in any manner for any personal injury or property damage or a loss of any kind arising from or connected with this inspection.

Date 7/23 1981

E. G. Hersill
Inspector's Signature

Commissions N.C. 723, PA WC1766, OHIO
National Board, State, Province and No.

*Supplemental sheets in form of lists, sketches or drawings may be used provided (1) size is 8½" x 11", (2) information in items 1-3 on this Data Report is included on each sheet, and (3) each sheet is numbered and number of sheets is recorded in item 3. "Remarks"

00010

(10/77) This form (E00040) may be obtained from the Order Dept., ASME, 345 E. 47th St., New York, N.Y. 10017

FORM N-2 (back)

Items 4–8 incl. to be completed for single wall vessels, jackets of jacketed vessels, or shells of heat exchangers.

4. Shell: Material ____ ____ T.S. ____ Nominal Thickness ____ in. Corrosion Allowance ____ in. Dia. ____ ft. ____ in. Length ____ ft. ____ in.
(Kind & Spec. No.) (Min. of Range Specified)

5. Seams: Long ____ H.T.[1] ____ R.T. ____ Efficiency ____ %

Girth ____ H.T.[1] ____ R.T. ____ No. of Courses ____

6. Heads: (a) Material ____ T.S. ____ (b) Material ____ T.S. ____

Location (Top, bottom, ends)	Thickness	Crown Radius	Knuckle Radius	Elliptical Ratio	Conical Apex Angle	Hemispherical Radius	Flat Diameter	Side to Press. (Conv. or Conc.)
(a)								
(b)								

If removable, bolts used ____ (Material, Spec. No., T.S., Size, Number) Other fastening ____ (Describe or attach sketch)

7. Jacket Closure: ____
(Describe as edge and weld, bar, etc. If bar give dimensions, if bolted, describe or sketch)

8. Design pressure[1] 1250 psi at 575 °F

Drop Weight ____
Charpy Impact ____ ft-lb
at temp. of ____ °F

Items 9 and 10 to be completed for tube sections

9. Tube Sheets: Stationary. Material ____ (Kind & Spec. No.) Dia. ____ (Subject to pressure) Thickness ____ in. Attachment ____ (Welded, Bolted)

Floating. Material ____ Dia. ____ Thickness ____ in. Attachment ____

10. Tubes: Material ____ O.D. ____ in. Thickness ____ inches or gage. Number ____ Type ____ (Str. or U)

Items 11–14 incl. to be completed for inner chambers of jacketed vessels, or channels of heat exchangers.

11. Shell: Material ____ T.S. ____ Nominal Thickness ____ in. Corrosion Allowance ____ in. Dia. ____ ft. ____ in. Length ____ ft. ____ in.
(Kind & Spec. No.) (Min. of Range Specified)

12. Seams: Long ____ H.T.[1] ____ R.T. ____ Efficiency ____ %

Girth ____ H.T.[1] ____ R.T. ____ No. of Courses ____

13. Heads (a) Material ____ T.S. ____ (b) Material ____ T.S. ____

Location	Thickness	Crown Radius	Knuckle Radius	Elliptical Ratio	Conical Apex Angle	Hemispherical Radius	Flat Diameter	Side to Press. (Conv. or Conc.)
(a) Top, bottom, ends								
(b) Channel								

If removable, bolts used (a) ____ (b) ____ (c) ____ Other fastening ____ (Describe or attach sketch)

14. Design pressure[1] ____ psi at ____ °F

Drop Weight ____
Charpy Impact ____ ft-lb
at temp. of ____ °F

Items below to be completed for all vessels where applicable.

15. Safety Valve Outlets: Number ____ Size ____ Location ____

16. Nozzles:

Purpose Inlet, Outlet, Drain	Number	Dia. or Size	Type	Material	Thickness	Reinforcement Material	How Attached

17. Inspection Openings: Manholes, No. ____ Size ____ Location ____
Handholes, No. ____ Size ____ Location ____
Threaded, No. ____ Size ____ Location ____

18. Supports: Skirt ____ (Yes or No) Lugs ____ (Number) Legs ____ (Number) Other ____ (Describe) Attached ____ (Where & How)

[1] If Postweld Heat-Treated.
[2] [illegible] other internal or external pressure with corresponding temperature when applicable.

FORM N-2 NPT CERTIFICATE HOLDERS' DATA REPORT FOR NUCLEAR PART AND APPURTENANCES*

As required by the Provision of the ASME Code Rules. Section III. Div. 1

{1613-037 24 of 46}

(a) Manufactured by General Electric Company, Castle Hayne Rd., Wilmington, N.C.
(Name and address of NPT Certificate Holder)

(b) Manufactured for General Electric Company, San Jose, California (NEBG)
(Name and address of N Certificate Holder for completed nuclear component)

2. Identification-Certificate Holder's Serial No. of Part A3551 Nat'l Bd. No.

(a) Constructed According to Drawing No. 768E534G001 Drawing Prepared by D. L. Peterson

(b) Description of Part Inspected Control Rod Drive, Model #7RDB144DG001

(c) Applicable ASME Code: Section III, Edition 1974, Addenda date W'75, Case No. N207 1361-2 Class 1

1. Cap 166B9274P1
(167A2343)
SA182 - F316
3/8 thick x 1 1/16 OD

2. Indicator Pipe 166B9313P1
SA312-TP316
3/4 sch 40-seamless pipe
0.113 wall thickness
1.065 max. dia.

3. Plug 159A1176P1
SA182-F304
1/4 thick x 0.812 OD

4. Flange 919D610P1 (719E474)
SA182-F304
3.37 thick x 9 5/8 OD
neck 1 1/16 thick x 5.0 OD
2.875 ID

5. Base 137C5311P1
XM-19 ASME SA479
3.0 OD x .884 ID

6. Ring Flange 114B5122P2
SA182-F304
1" thick x 5.0 OD x 1.75 ID

7. Cap Screw 117C4516P2
SA193-B6
6 ea. 1/2 dia. on 4 1/8 bolt circle

8. Plug 175A7961P1
SA182-F304
0.38 thick x 1.307 dia.

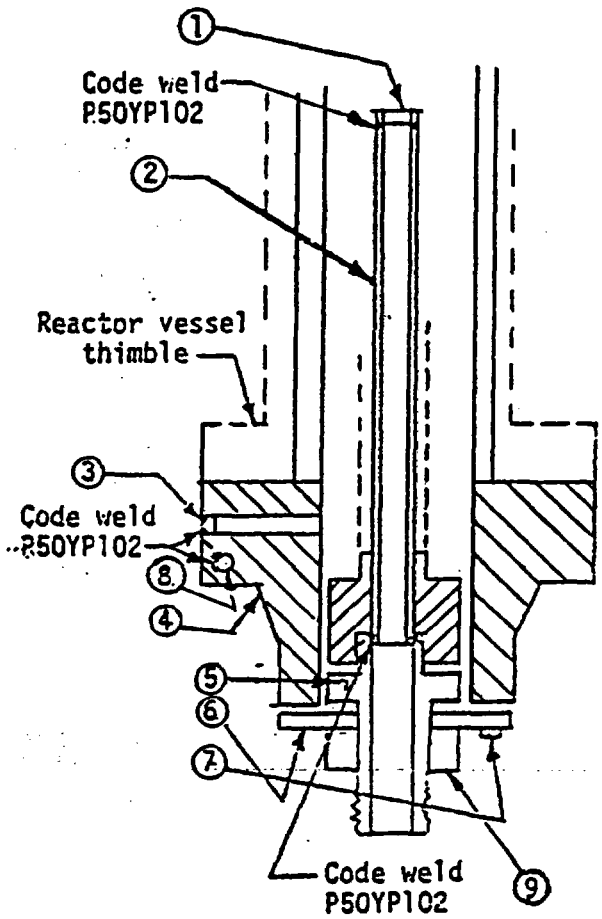

CONTROL ROD DRIVE
DWG - 768E534

9. Nut 137C5934P1
XM-19 SA479
1.30 thick x 2.62 dia.

00011

FORM N-2 NPT CERTIFICATE HOLDERS' DATA REPORT FOR NUCLEAR PART AND APPURTENANCES*

As required by the Provision of the ASME Code Rules. Section III. Div. 1 {1B13-037 25 of 46}

1. (a) Manufactured by General Electric Company, Castle Hayne Rd., Wilmington, N.C.
(Name and address of NPT Certificate Holder)

(b) Manufactured for General Electric Company, San Jose, California (NEBG)
(Name and address of N Certificate Holder for completed nuclear component)

2. Identification-Certificate Holder's Serial No. of Part A5699 Nat'l Bd. No.

(a) Constructed According to Drawing No. 768E534G001 Drawing Prepared by D. L. Paterson

(b) Description of Part Inspected Control Rod Drive, Model #7RDB144DG001

(c) Applicable ASME Code: Section III, Edition 1974, Addenda date W'75, Case No. N207 1361-2 Class 1

3. Remarks: Standard part for use with Reactor. Hydrostatically tested at 1820 psi.
(Brief description of service for which component was designed)

* Total number of sheets - 2

We certify that the statements made in this report are correct and this vessel part or appurtenance as defined in the Code conforms to the rules of construction of the ASME Code Section III.
(The applicable Design Specification and Stress Report are not the responsibility of the NPT Certificate Holder for parts. An NPT Certificate Holder for appurtenances is responsible for furnishing a separate Design Specification and Stress Report if the appurtenance is not included in the component Design Specification and Stress Report.)

4/24 19 81 Signed GE, NEPD-WMD-QA By J. Stroudemann
(NPT Certificate Holder)

Certificate of Authorization Expires June 16, 1981 Certificate of Authorization No. NPT N-1151

CERTIFICATION OF DESIGN FOR APPURTENANCE (when applicable)

Design information on file at GE, NEPD-WMD-QA, Castle Hayne Rd., Wilmington, N.C.
22A5556, Rev. 1

Stress analysis report on file at GE, NEPD-WMD-QA, Castle Hayne Rd., Wilmington, N.C.
22A4912, Rev. 2

Design specifications certified by B. N. Sridhar Prof. Eng. State Calif Reg. No. 18345

Stress analysis report certified by B. N. Sridhar Prof. Eng. State Calif Reg. No. 18345

CERTIFICATE OF SHOP INSPECTION

I, the undersigned, holding a valid commission issued by the National Board of Boiler and Pressure Vessel Inspectors and/or the State or Province of North Carolina and employed by Department of Labor of State of North Carolina have inspected the part of a pressure vessel described in this Partial Data Report on 4/24 19 81 and state that to the best of my knowledge and belief, the NPT Certificate Holder has constructed this part in accordance with the ASME Code Section III.

By signing this certificate, neither the Inspector nor his employer makes any warranty, expressed or implied, concerning the part described in this Partial Data Report. Furthermore, neither the Inspector nor his employer shall be liable in any manner for any personal injury or property damage or a loss of any kind arising from or connected with this inspection.

Date 4/24 19 81 N.C. 723, PA.WC1766, OHIO

Inspector's Signature Commissions National Board, State, Province and No.

00356

*Supplemental sheets in form of lists, sketches or drawings may be used provided (1) size is 8½" x 11", (2) information in items 1-3 on this Data Report is included on each sheet, and (3) each sheet is numbered and number of sheets is recorded in item 3. "Remarks"

(10/77) This form (E000 40) may be obtained from the Order Dept., ASME, 345 E. 47th St., New York, N.Y. 10017

FORM N-2 (back)

Items 4–8 incl. to be completed for single wall vessels, jackets of jacketed vessels, or shells of heat exchangers.

4. Shell: Material _____ (Kind & Spec. No.) _____ T.S. _____ (Min. of Range Specified) Nominal Thickness ____ in. Corrosion Allowance ____ in. Dia. ____ ft. ____ in. Length ____ ft. ____ in.

5. Seams: Long _____ H.T.[1] _____ R.T. _____ Efficiency _____ %

Girth _____ H.T.[1] _____ R.T. _____ No. of Courses _____

6. Heads: (a) Material _____ T.S. _____ (b) Material _____ T.S. _____

Location (Top, bottom, ends)	Thickness	Crown Radius	Knuckle Radius	Elliptical Ratio	Conical Apex Angle	Hemispherical Radius	Flat Diameter	Side to Press. (Conv. or Conc.)
(a)								
(b)								

If removable, bolts used _____ (Material, Spec. No., T.S., Size, Number) Other fastening _____ (Describe or attach sketch)

7. Jacket Closure: _____ (Describe as edge and weld, bar, etc. If bar give dimensions, if bolted, describe or sketch)

8. Design pressure[2] 1250 psi at 575 °F

Drop Weight _____
Charpy Impact _____ ft-lb
at temp. of _____ °F

Items 9 and 10 to be completed for tube sections

9. Tube Sheets: Stationary. Material _____ (Kind & Spec. No.) Dia. _____ (Subject to pressure) Thickness ____ in. Attachment _____ (Welded, Bolted)

Floating. Material _____ Dia. _____ Thickness ____ in. Attachment _____

10. Tubes: Material _____ O.D. ____ in. Thickness _____ inches or gage. Number _____ Type _____ (Str. or U)

Items 11–14 incl. to be completed for inner chambers of jacketed vessels, or channels of heat exchangers.

11. Shell: Material _____ (Kind & Spec. No.) T.S. _____ (Min. of Range Specified) Nominal Thickness ____ in. Corrosion Allowance ____ in. Dia. ____ ft. ____ in. Length ____ ft. ____ in.

12. Seams: Long _____ H.T.[1] _____ R.T. _____ Efficiency _____ %

Girth _____ H.T.[1] _____ R.T. _____ No. of Courses _____

13. Heads (a) Material _____ T.S. _____ (b) Material _____ T.S. _____

Location	Thickness	Crown Radius	Knuckle Radius	Elliptical Ratio	Conical Apex Angle	Hemispherical Radius	Flat Diameter	Side to Press. (Conv. or Conc.)
(a) Top, bottom, ends								
(b) Channel								

If removable, bolts used (a) _____ (b) _____ (c) _____ Other fastening _____ (Describe or attach sketch)

14. Design pressure[2] _____ psi at _____ °F

Drop Weight _____
Charpy Impact _____ ft-lb
at temp. of _____ °F

Items below to be completed for all vessels where applicable.

15. Safety Valve Outlets: Number _____ Size _____ Location _____

16. Nozzles:

Purpose (Inlet, Outlet, Drain)	Number	Dia. or Size	Type	Material	Thickness	Reinforcement Material	How Attached

17. Inspection Openings: Manholes, No. _____ Size _____ Location _____
Handholes, No. _____ Size _____ Location _____
Threaded, No. _____ Size _____ Location _____

18. Supports: Skirt _____ (Yes or No) Lugs _____ (Number) Legs _____ (Number) Other _____ (Describe) Attached _____ (Where & How)

[1] If Postweld Heat-Treated.
[2] List other internal or external pressure with corresponding temperature when applicable.

FORM N-2 NPT CERTIFICATE HOLDERS' DATA REPORT FOR NUCLEAR PART AND APPURTENANCES

As required by the Provision of the ASME Code Rules, Section III, Div. 1 {1B13-037 26 of 46}

(a) Manufactured by General Electric Company, Castle Hayne Rd., Wilmington, N.C.
(Name and address of NPT Certificate Holder)

(b) Manufactured for General Electric Company, San Jose, California (NEBG)
(Name and address of N Certificate Holder for completed nuclear component)

2. Identification-Certificate Holder's Serial No. of Part A5699 Nat'l Bd. No.

(a) Constructed According to Drawing No. 768E534G001 Drawing Prepared by D. L. Peterson

(b) Description of Part Inspected Control Rod Drive, Model #7RDB144DG001

(c) Applicable ASME Code: Section III, Edition 1974, Addenda date W'75, Case No. N207 1361-2 Class 1

1. Cap 166B9274P1
(167A2343)
SA182 - F316
3/8 thick x 1 1/16 OD

2. Indicator Pipe 166B9313P1
SA312-TP316
3/4 sch 40-seamless pipe
0.113 wall thickness
1.065 max. dia.

3. Plug 159A1176P1
SA182-F304
1/4 thick x 0.812 OD

4. Flange 919D610P1 (719E474)
SA182-F304
3.37 thick x 9 5/8 OD
neck 1 1/16 thick x 5.0 OD
2.875 ID

5. Base 137C5311P1
XM-19 ASME SA479
3.0 OD x .884 ID

6. Ring Flange 114B5122P2
SA182-F304
1" thick x 5.0 OD x 1.75 ID

7. Cap Screw 117C4516P2
SA193-B6
6 ea. 1/2 dia. on 4 1/8 bolt circle

8. Plug 175A7961P1
SA182-F304
0.38 thick x 1.307 dia.

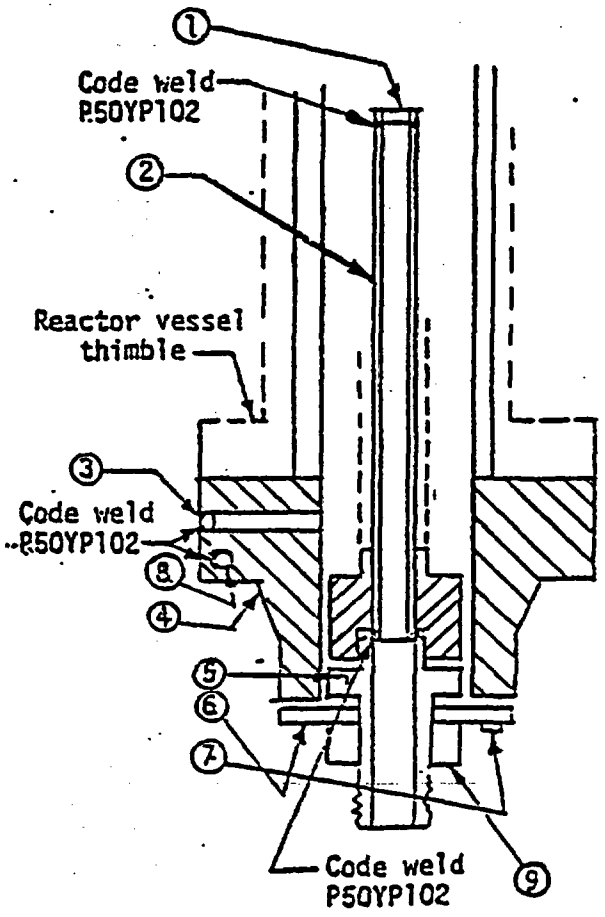

CONTROL ROD DRIVE
DWG - 768E534

9. Nut 137C5934P1
XM-19 SA479
1.30 thick x 2.62 dia.

00357

B13 · 16582

FORM N-2 NPT CERTIFICATE HOLDERS' DATA REPORT FOR NUCLEAR PART AND APPURTENANCES*

As required by the Provision of the ASME Code Rules, Section III, Div. 1

1B13-037
27 of 46

1. (a) Manufactured by General Electric Company, Castle Hayne Rd., Wilmington, N.C.
(Name and address of NPT Certificate Holder)

(b) Manufactured for General Electric Company, San Jose, California (NEBG)
(Name and address of N Certificate Holder for completed nuclear component)

2. Identification-Certificate Holder's Serial No. of Part A5451 Nat'l Bd. No.

(a) Constructed According to Drawing No. 768E534G001 Drawing Prepared by D. L. Peterson

(b) Description of Part Inspected Control Rod Drive, Model #7RDB144DG001

(c) Applicable ASME Code: Section III, Edition 1974, Addenda date W'75, Case No. N207 1361-2 Class 1

3. Remarks: Standard part for use with Reactor. Hydrostatically tested at 1820 psi.
(Brief description of service for which component was designed)

* Total number of sheets - 2

We certify that the statements made in this report are correct and this vessel part or appurtenance as defined in the Code conforms to the rules of construction of the ASME Code Section III.
(The applicable Design Specification and Stress Report are not the responsibility of the NPT Certificate Holder for parts. An NPT Certificate Holder for appurtenances is responsible for furnishing a separate Design Specification and Stress Report if the appurtenance is not included in the component Design Specification and Stress Report.)

Date 6/12 19 81 Signed GE, NEPD-WMD By J. C. Troedemann
(NPT Certificate Holder)

Certificate of Authorization Expires June 16, 1981 Certificate of Authorization No. NPT N-1151

CERTIFICATION OF DESIGN FOR APPURTENANCE (when applicable)

Design information on file at GE, NEPD-WMD-QA, Castle Hayne Rd., Wilmington, N.C.
22A5556, Rev. 2

Stress analysis report on file at GE, NEPD, San Jose, Calif.
22A4912, Rev. 2

Design specifications certified by B. N. Sridhar Prof. Eng. State Calif Reg. No. 18345

Stress analysis report certified by B. N. Sridhar Prof. Eng. State Calif Reg. No. 18345

CERTIFICATE OF SHOP INSPECTION

I, the undersigned, holding a valid commission issued by the National Board of Boiler and Pressure Vessel Inspectors and/or the State or Province of North Carolina and employed by Department of Labor of State of North Carolina have inspected the part of a pressure vessel described in this Partial Data Report on 6/12 19 81 and state that to the best of my knowledge and belief, the NPT Certificate Holder has constructed this part in accordance with the ASME Code Section III.

By signing this certificate, neither the Inspector nor his employer makes any warranty, expressed or implied, concerning the part described in this Partial Data Report. Furthermore, neither the Inspector nor his employer shall be liable in any manner for any personal injury or property damage or a loss of any kind arising from or connected with this inspection.

Date 6/12 19 81

E. L. Sherrill
Inspector's Signature

Commissions N.C. 723, PA WC1766, OHIO
National Board, State, Province and No.

*Supplemental sheets in form of lists, sketches or drawings may be used provided (1) size is 8½" x 11", (2) information in items 1-3 on this Data Report is included on each sheet, and (3) each sheet is numbered and number of sheets is recorded in item 3, "Remarks".

00551

(10/77) This form (E00040) may be obtained from the Order Dept., ASME, 345 E. 47th St., New York, N.Y. 10017

FORM N-2 (back)

Items 4–8 incl. to be completed for single wall vessels, jackets of jacketed vessels, or shells of heat exchangers.

4. Shell: Material _____ (Kind & Spec. No.) T.S. _____ (Min. of Range Specified) Nominal Thickness ____ in. Corrosion Allowance ____ in. Dia. ____ ft. ____ in. Length ____ ft. ____ in.

5. Seams: Long _____ H.T.[1] _____ R.T. _____ Efficiency _____ %

Girth _____ H.T.[1] _____ R.T. _____ No. of Courses _____

6. Heads: (a) Material _____ T.S. _____ (b) Material _____ T.S. _____

Location (Top, bottom, ends)	Thickness	Crown Radius	Knuckle Radius	Elliptical Ratio	Conical Apex Angle	Hemispherical Radius	Flat Diameter	Side to Press. (Conv. or Conc.)
(a)								
(b)								

If removable, bolts used _____ (Material, Spec. No., T.S., Size, Number) Other fastening _____ (Describe or attach sketch)

7. Jacket Closure: _____ (Describe as ogee and weld, bar, etc. If bar give dimensions, if bolted, describe or sketch)

8. Design pressure[2] 1250 psi at 575 °F

Drop Weight _____
Charpy Impact _____ ft-lb
at temp. of _____ °F

Items 9 and 10 to be completed for tube sections

9. Tube Sheets: Stationary. Material _____ (Kind & Spec. No.) Dia. _____ (Subject to pressure) Thickness ____ in. Attachment _____ (Welded, Bolted)

Floating. Material _____ Dia. _____ Thickness ____ in. Attachment _____

10. Tubes: Material _____ O.D. ____ in. Thickness _____ inches or gage. Number _____ Type _____ (Str. or U)

Items 11–14 incl. to be completed for inner chambers of jacketed vessels, or channels of heat exchangers.

11. Shell: Material _____ (Kind & Spec. No.) T.S. _____ (Min. of Range Specified) Nominal Thickness ____ in. Corrosion Allowance ____ in. Dia. ____ ft. ____ in. Length ____ ft. ____ in.

12. Seams: Long _____ H.T.[1] _____ R.T. _____ Efficiency _____ %

Girth _____ H.T.[1] _____ R.T. _____ No. of Courses _____

13. Heads: (a) Material _____ T.S. _____ (b) Material _____ T.S. _____

Location	Thickness	Crown Radius	Knuckle Radius	Elliptical Ratio	Conical Apex Angle	Hemispherical Radius	Flat Diameter	Side to Press. (Conv. or Conc.)
(a) Top, bottom, ends								
(b) Channel								

If removable, bolts used (a) _____ (b) _____ (c) _____ Other fastening _____ (Describe or attach sketch)

14. Design pressure[2] _____ psi at _____ °F

Drop Weight _____
Charpy Impact _____ ft-lb
at temp. of _____ °F

Items below to be completed for all vessels where applicable.

15. Safety Valve Outlets: Number _____ Size _____ Location _____

16. Nozzles:

Purpose (Inlet, Outlet, Drain)	Number	Dia. or Size	Type	Material	Thickness	Reinforcement Material	How Attached

17. Inspection Openings: Manholes, No. _____ Size _____ Location _____
Handholes, No. _____ Size _____ Location _____
Threaded, No. _____ Size _____ Location _____

18. Supports: Skirt _____ (Yes or No) Lugs _____ (Number) Legs _____ (Number) Other _____ (Describe) Attached _____ (Where & How)

[1] If Postweld Heat-Treated.
[2] List other internal or external pressure with coincident temperature when applicable.

FORM N-2 NPT CERTIFICATE HOLDERS' DATA REPORT FOR NUCLEAR PART AND APPURTENANCES*

As required by the Provision of the ASME Code Rules, Section III, Div. 1 {1B13-037 28 of 46}

1. (a) Manufactured by General Electric Company, Castle Hayne Rd., Wilmington, N.C.
(Name and address of NPT Certificate Holder)

(b) Manufactured for General Electric Company, San Jose, California (NEBG)
(Name and address of N Certificate Holder for completed nuclear component)

2. Identification-Certificate Holder's Serial No. of Part A5451 Nat'l Bd. No.

(a) Constructed According to Drawing No. 768E534G001 Drawing Prepared by D. L. Peterson

(b) Description of Part Inspected Control Rod Drive, Model #7RDB144DG001

(c) Applicable ASME Code: Section III, Edition 1974, Addenda date W'75, Case No. N207 1361-2 Class 1

1. Cap 166B9274P1
(167A2343)
SA182 - F316
3/8 thick x 1 1/16 OD

2. Indicator Pipe 166B9313P1
SA312-TP316
3/4 sch 40-seamless pipe
0.113 wall thickness
1.065 max. dia.

3. Plug 159A1176P1
SA182-F304
1/4 thick x 0.812 OD

4. Flange 919B610P1 (719E474)
SA182-F304
3.37 thick x 9 5/8 OD
neck 1 1/16 thick x 5.0 OD
2.875 ID

5. Base 137C5311P1
XM-19 ASME SA479
3.0 OD x .884 ID

6. Ring Flange 114B5122P2
SA182-F304
1" thick x 5.0 OD x 1.75 ID

7. Cap Screw 117C4516P2
SA193-B6
6 ea. 1/2 dia. on 4 1/8 bolt circle

8. Plug 175A7961P1
SA182-F304
0.38 thick x 1.307 dia.

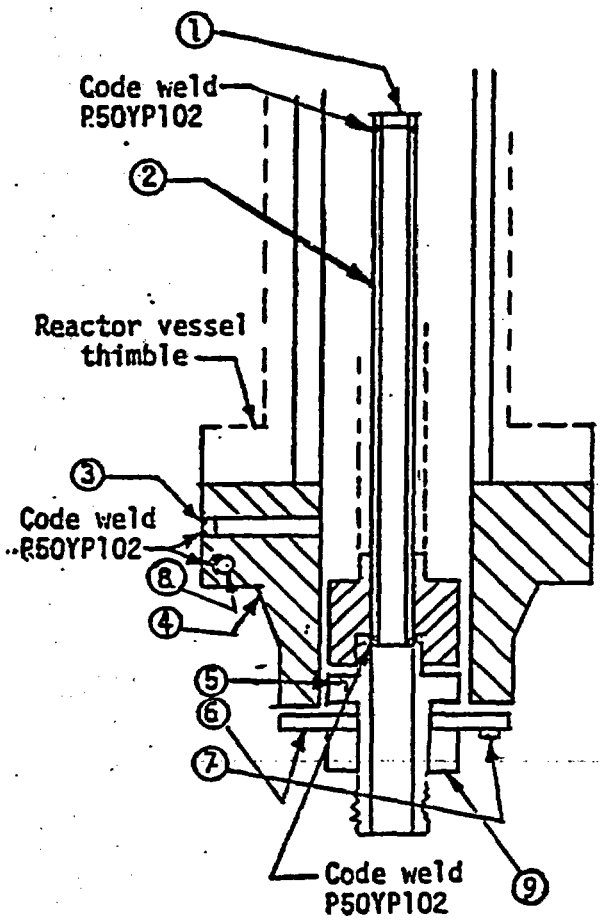

CONTROL ROD DRIVE
DWG - 768E534

9. Nut 137C5934P1
XM-19 SA479
1.30 thick x 2.62 dia.

00552

FORM N-2 NPT CERTIFICATE HOLDERS' DATA REPORT FOR NUCLEAR PART AND APPURTENANCES*

As required by the Provision of the ASME Code Rules, Section III, Div. 1

1B13-037
29 of 46

1. (a) Manufactured by General Electric Company, Castle Hayne Rd., Wilmington, N.C.
(Name and address of NPT Certificate Holder)

(b) Manufactured for General Electric Company, San Jose, California (NEBG)
(Name and address of N Certificate Holder for completed nuclear component)

2. Identification-Certificate Holder's Serial No. of Part A4218 Nat'l Bd. No.

(a) Constructed According to Drawing No. 768E534G001 Drawing Prepared by D. L. Peterson

(b) Description of Part Inspected Control Rod Drive, Model #7RDB144DG001

(c) Applicable ASME Code: Section III, Edition 1974, Addenda date W'75, Case No. N20/1361-2 Class 1

3. Remarks: Standard part for use with Reactor. Hydrostatically tested at 1820 psi.
(Brief description of service for which component was designed)

* Total number of sheets - 2

We certify that the statements made in this report are correct and this vessel part or appurtenance as defined in the Code conforms to the rules of construction of the ASME Code Section III.
(The applicable Design Specification and Stress Report are not the responsibility of the NPT Certificate Holder for parts. An NPT Certificate Holder for appurtenances is responsible for furnishing a separate Design Specification and Stress Report if the appurtenance is not included in the component Design Specification and Stress Report.)

12/30 19 80 Signed GE, NEPD-WMD-QA By
(NPT Certificate Holder)

Certificate of Authorization Expires June 16, 1981 Certificate of Authorization No. NPT N-1151

CERTIFICATION OF DESIGN FOR APPURTENANCE (when applicable)

Design information on file at GE, NEPD-WMD-QA, Castle Hayne Rd., Wilmington, N.C.
22A5556, Rev. 1

Stress analysis report on file at GE, NEPD-WMD-QA, Castle Hayne Rd., Wilmington, N.C.
22A4912, Rev. 2

Design specifications certified by B. N. Sridhar Prof. Eng. State Calif Reg. No. 18345

Stress analysis report certified by B. N. Sridhar Prof. Eng. State Calif Reg. No. 18345

CERTIFICATE OF SHOP INSPECTION

I, the undersigned, holding a valid commission issued by the National Board of Boiler and Pressure Vessel Inspectors and/or the State or Province of North Carolina and employed by Department of Labor of State of North Carolina have inspected the part of a pressure vessel described in this Partial Data Report on 12/30 19 80 and state that to the best of my knowledge and belief, the NPT Certificate Holder has constructed this part in accordance with the ASME Code Section III.

By signing this certificate, neither the inspector nor his employer makes any warranty, expressed or implied, concerning the part described in this Partial Data Report. Furthermore, neither the inspector nor his employer shall be liable in any manner for any personal injury or property damage or a loss of any kind arising from or connected with this inspection.

Date 12/30 19 80

Inspector's Signature Commissions NC 779, PA 102200, Ohio
National Board, State, Province and No.

*Supplemental sheets in form of lists, sketches or drawings may be used provided (1) size is 8½" x 11", (2) information in items 1-3 on this Data Report is included on each sheet, and (3) each sheet is numbered and number of sheets is recorded in item 3, "Remarks"

0023

(10/77) This form (E00040) may be obtained from the Order Dept., ASME, 345 E. 47th St., New York, N.Y. 10017

FORM N-2 (back)

Items 4–8 incl. to be completed for single wall vessels, jackets of jacketed vessels, or shells of heat exchangers.

4. Shell: Material ____ (Kind & Spec. No.) ____ T.S. ____ (Min. of Range Specified) Nominal Thickness ____ in. Corrosion Allowance ____ in. Dia. ____ ft. ____ in. Length ____ ft. ____ in.

5. Seams: Long ____ H.T.[1] ____ R.T. ____ Efficiency ____ %

Girth ____ H.T.[1] ____ R.T. ____ No. of Courses ____

6. Heads: (a) Material ____ T.S. ____ (b) Material ____ T.S. ____

	Location (Top, bottom, ends)	Thickness	Crown Radius	Knuckle Radius	Elliptical Ratio	Conical Apex Angle	Hemispherical Radius	Flat Diameter	Side to Press. (Conv. or Conc.)
(a)									
(b)									

If removable, bolts used ____ (Material, Spec. No., T.S., Size, Number) Other fastening ____ (Describe or attach sketch)

7. Jacket Closure: ____ (Describe as ogee and weld, bar, etc. If bar give dimensions, if bolted, describe or sketch)

8. Design pressure[2] 1250 psi at 575 °F Drop Weight ____ Charpy Impact ____ ft-lb at temp. of ____ °F

Items 9 and 10 to be completed for tube sections

9. Tube Sheets: Stationary. Material ____ (Kind & Spec. No.) Dia. ____ (Subject to pressure) Thickness ____ in. Attachment ____ (Welded, Bolted)

Floating. Material ____ Dia. ____ Thickness ____ in. Attachment ____

10. Tubes: Material ____ O.D. ____ in. Thickness ____ inches or gage. Number ____ Type ____ (Str. or U)

Items 11–14 incl. to be completed for inner chambers of jacketed vessels, or channels of heat exchangers.

11. Shell: Material ____ (Kind & Spec. No.) T.S. ____ (Min. of Range Specified) Nominal Thickness ____ in. Corrosion Allowance ____ in. Dia. ____ ft. ____ in. Length ____ ft. ____ in.

12. Seams: Long ____ H.T.[1] ____ R.T. ____ Efficiency ____ %

Girth ____ H.T.[1] ____ R.T. ____ No. of Courses ____

13. Heads (a) Material ____ T.S. ____ (b) Material ____ T.S. ____

	Location	Thickness	Crown Radius	Knuckle Radius	Elliptical Ratio	Conical Apex Angle	Hemispherical Radius	Flat Diameter	Side to Press. (Conv. or Conc.)
(a)	Top, bottom, ends								
(b)	Channel								

If removable, bolts used (a) ____ (b) ____ (c) ____ Other fastening ____ (Describe or attach sketch)

14. Design pressure[2] ____ psi at ____ °F Drop Weight ____ Charpy Impact ____ ft-lb at temp. of ____ °F

Items below to be completed for all vessels where applicable.

15. Safety Valve Outlets: Number ____ Size ____ Location ____

16. Nozzles:

Purpose (Inlet, Outlet, Drain)	Number	Dia. or Size	Type	Material	Thickness	Reinforcement Material	How Attached

17. Inspection Openings: Manholes, No. ____ Size ____ Location ____
Handholes, No. ____ Size ____ Location ____
Threaded, No. ____ Size ____ Location ____

18. Supports: Skirt ____ (Yes or No) Lugs ____ (Number) Legs ____ (Number) Other ____ (Describe) Attached ____ (Where & How)

[1] Butt weld Heat-Treated.
[2] List other internal or external pressure with coincident temperature when applicable.

FORM N-2 NPT CERTIFICATE HOLDERS' DATA REPORT FOR NUCLEAR PART AND APPURTENANCES
As required by the Provision of the ASME Code Rules, Section III, Div. 1

1B13-037
30 of 46

(a) Manufactured by General Electric Company, Castle Hayne Rd., Wilmington, N.C.
(Name and address of NPT Certificate Holder)

(b) Manufactured for General Electric Company, San Jose, California (NEBG)
(Name and address of N Certificate Holder for completed nuclear component)

2. Identification-Certificate Holder's Serial No. of Part A4218 Nat'l Bd. No.

(a) Constructed According to Drawing No. 768E534G001 Drawing Prepared by D. L. Peterson

(b) Description of Part Inspected Control Rod Drive, Model #7RDB144DG001

(c) Applicable ASME Code: Section III, Edition 1974, Addenda date W'75 Case No. N207 1361-2 Class 1

1. Cap 166B9274P1
(167A2343)
SA182 - F316
3/8 thick x 1 1/16 OD

2. Indicator Pipe 166B9313P1
SA312-TP316
3/4 sch 40-seamless pipe
0.113 wall thickness
1.065 max. dia.

3. Plug 159A1176P1
SA182-F304
1/4 thick x 0.812 OD

4. Flange 919D610P1 (719E474)
SA182-F304
3.37 thick x 9 5/8 OD
neck 1 1/16 thick x 5.0 OD
2.875 ID

5. Base 137C5311P1
XM-19 ASME SA479
3.0 OD x .884 ID

6. Ring Flange 114B5122P2
SA182-F304
1" thick x 5.0 OD x 1.75 ID

7. Cap Screw 117C4516P2
SA193-B6
6 ea. 1/2 dia. on 4 1/8 bolt circle

8. Plug 175A7961P1
SA182-F304
0.38 thick x 1.307 dia.

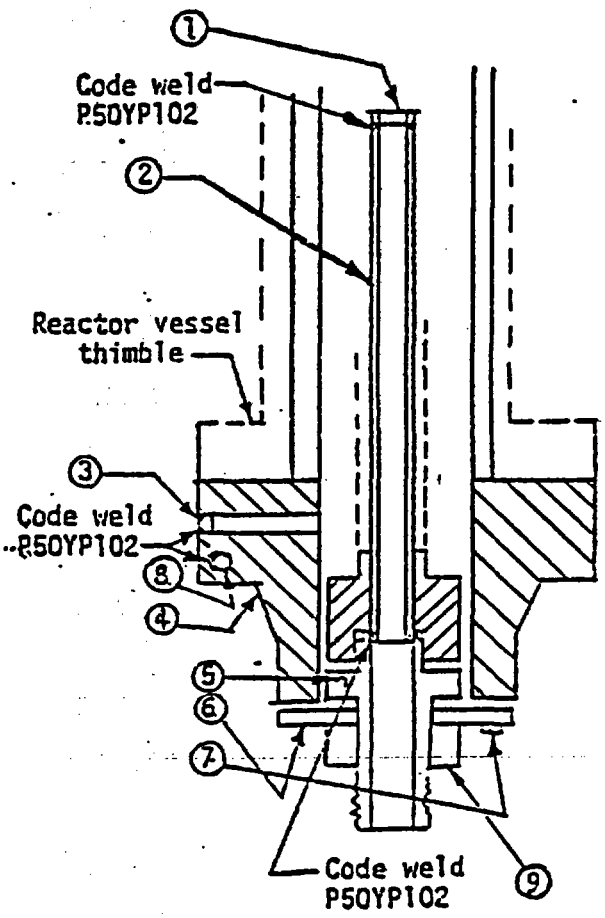

CONTROL ROD DRIVE
DWG - 768E534

9. Nut 137C5934P1
XM-19 SA479
1.30 thick x 2.62 dia.

00234

MR 19488

FORM N-2 NPT CERTIFICATE HOLDERS' DATA REPORT FOR NUCLEAR PART AND APPURTENANCES*

As required by the Provision of the ASME Code Rules. Section III. Div. 1 B13-037 (31 of 46)

1. (a) Manufactured by General Electric Company, Castle Hayne Rd., Wilmington, N.C.
(Name and address of NPT Certificate Holder)

(b) Manufactured for General Electric Company, San Jose, California
(Name and address of N Certificate Holder for completed nuclear component)

2. Identification-Certificate Holder's Serial No. of Part 9253 Nat'l Bd. No. _____

(a) Constructed According to Drawing No. 768E534G001 Drawing Prepared by D. L. Peterson

(b) Description of Part Inspected Control Rod Drive, Model #7RDB144DG001

(c) Applicable ASME Code: Section III, Edition 1974, Addenda date W'75, Case No. N207 1361-2 Class 1

3. Remarks: Standard part for use with Reactor. Hydrostatically tested at 1820 psi.
(Brief description of service for which component was designed)

* Total number of sheets - 2

We certify that the statements made in this report are correct and this vessel part or appurtenance as defined in the Code conforms to the rules of construction of the ASME Code Section III.
(The applicable Design Specification and Stress Report are not the responsibility of the NPT Certificate Holder for parts. An NPT Certificate Holder for appurtenances is responsible for furnishing a separate Design Specification and Stress Report if the appurtenance is not included in the component Design Specification and Stress Report.)

Date 12/28 19 79 Signed GE, NEPD-WMD-QA (NPT Certificate Holder) By [signature]

Certificate of Authorization Expires June 16, 1981 Certificate of Authorization No. NPT N-1151

CERTIFICATION OF DESIGN FOR APPURTENANCE (when applicable)

Design information on file at GE, NEPD-WMD-QA, Castle Hayne Rd., Wilmington, N.C.
22A5556, Rev. 1

Stress analysis report on file at GE, NEPD-WMD-QA, Castle Hayne Rd., Wilmington, N.C.
22A4912, Rev. 2

Design specifications certified by B. N. Sridhar Prof. Eng. State Calif Reg. No. 18345

Stress analysis report certified by B. N. Sridhar Prof. Eng. State Calif Reg. No. 18345

CERTIFICATE OF SHOP INSPECTION

I, the undersigned, holding a valid commission issued by the National Board of Boiler and Pressure Vessel Inspectors and/or the State or Province of North Carolina and employed by Department of Labor of State of North Carolina have inspected the part of a pressure vessel described in this Partial Data Report on 12/28 19 79 and state that to the best of my knowledge and belief, the NPT Certificate Holder has constructed this part in accordance with the ASME Code Section III.

By signing this certificate, neither the inspector nor his employer makes any warranty, expressed or implied, concerning the part described in this Partial Data Report. Furthermore, neither the inspector nor his employer shall be liable in any manner for any personal injury or property damage or a loss of any kind arising from or connected with this inspection.

Date 12/28 19 79

[signature] Inspector's Signature

Commissions NC 723, PA WC1766, OHIO.
National Board, State, Province and No.

*Supplemental sheets in form of lists, sketches or drawings may be used provided (1) size is 8½" x 11", (2) information in Items 1-2 on this Data Report is included on each sheet, and (3) each sheet is numbered and number of sheets is recorded in Item 3, "Remarks".

(10/77) This form (E00040) may be obtained from the Order Dept., ASME, 345 E. 47th St., New York, N.Y. 10017

7-14-94

FORM N-2 (back)

Items 4–8 incl. to be completed for single wall vessels, jackets of jacketed vessels, or shells of heat exchangers.

4. Shell: Material ____ ____ T.S. ____ Nominal Thickness ____ in. Corrosion Allowance ____ in. Dia. ____ ft. ____ in. Length ____ ft. ____ in.
(Kind & Spec. No.) (Min. of Range Specified)

5. Seams: Long ____ H.T.[1] ____ R.T. ____ Efficiency ____ %

Girth ____ H.T.[1] ____ R.T. ____ No. of Courses ____

6. Heads: (a) Material ____ T.S. ____ (b) Material ____ T.S. ____

Location (Top, bottom, ends)	Thickness	Crown Radius	Knuckle Radius	Elliptical Ratio	Conical Apex Angle	Hemispherical Radius	Flat Diameter	Side to Press. (Conv. or Conc.)
(a) ____	____	____	____	____	____	____	____	____
(b) ____	____	____	____	____	____	____	____	____

If removable, bolts used ____ (Material, Spec. No., T.S., Size, Number) Other fastening ____ (Describe or attach sketch)

7. Jacket Closure: ____
(Describe as ogee and weld, bar, etc. If bar give dimensions, if bolted, describe or sketch)

8. Design pressure[2] 1250 psi at 575 °F

Drop Weight ____
Charpy Impact ____ ft-lb
at temp. of ____ °F

Items 9 and 10 to be completed for tube sections

9. Tube Sheets: Stationary. Material ____ (Kind & Spec. No.) Dia. ____ (Subject to pressure) Thickness ____ in. Attachment ____ (Welded, Bolted)

Floating. Material ____ Dia. ____ Thickness ____ in. Attachment ____

10. Tubes: Material ____ O.D. ____ in. Thickness ____ inches or gage. Number ____ Type ____ (Str. or U)

Items 11–14 incl. to be completed for inner chambers of jacketed vessels, or channels of heat exchangers.

11. Shell: Material ____ T.S. ____ Nominal Thickness ____ in. Corrosion Allowance ____ in. Dia. ____ ft. ____ in. Length ____ ft. ____ in.
(Kind & Spec. No.) (Min. of Range Specified)

12. Seams: Long ____ H.T.[1] ____ R.T. ____ Efficiency ____ %

Girth ____ H.T.[1] ____ R.T. ____ No. of Courses ____

13. Heads (a) Material ____ T.S. ____ (b) Material ____ T.S. ____

Location	Thickness	Crown Radius	Knuckle Radius	Elliptical Ratio	Conical Apex Angle	Hemispherical Radius	Flat Diameter	Side to Press. (Conv. or Conc.)
(a) Top, bottom, ends	____	____	____	____	____	____	____	____
(b) Channel	____	____	____	____	____	____	____	____

If removable, bolts used (a) ____ (b) ____ (c) ____ Other fastening ____ (Describe or attach sketch)

14. Design pressure[2] ____ psi at ____ °F

Drop Weight ____
Charpy Impact ____ ft-lb
at temp. of ____ °F

Items below to be completed for all vessels where applicable.

15. Safety Valve Outlets: Number ____ Size ____ Location ____

16. Nozzles:

Purpose (Inlet, Outlet, Drain)	Number	Dia. or Size	Type	Material	Thickness	Reinforcement Material	How Attached
____	____	____	____	____	____	____	____
____	____	____	____	____	____	____	____
____	____	____	____	____	____	____	____

17. Inspection Openings: Manholes, No. ____ Size ____ Location ____
Handholes, No. ____ Size ____ Location ____
Threaded, No. ____ Size ____ Location ____

18. Supports: Skirt ____ (Yes or No) Lugs ____ (Number) Legs ____ (Number) Other ____ (Describe) Attached ____ (Where & How)

[1] If Postweld Heat-Treated.
[2] List other internal or external pressure with coincident temperature when applicable.

FORM N-2 NPT CERTIFICATE HOLDERS' DATA REPORT FOR NUCLEAR PART AND APPURTENANCES*

As required by the Provision of the ASME Code Rules, Section III, Div. 1 MR19488

1. (a) Manufactured by General Electric Company, Castle Hayne Rd., Wilmington, N.C. 1B13-037 32 of 46
(Name and address of NPT Certificate Holder)

(b) Manufactured for General Electric Company, San Jose, California (NEBG)
(Name and address of N Certificate Holder for completed nuclear component)

2. Identification-Certificate Holder's Serial No. of Part 9253 Nat'l Bd. No. _____

(a) Constructed According to Drawing No. 768E534G001 Drawing Prepared by D. L. Peterson

(b) Description of Part Inspected Control Rod Drive, Model #7RDB144DG001

(c) Applicable ASME Code: Section III, Edition 1974, Addenda date W'75, Case No. N207 1361-2 Class 1

1. Cap 166B9274P1
(167A2343)
SA182 - F316
3/8 thick x 1 1/16 OD

2. Indicator Pipe 166B9313P1
SA312-TP316
3/4 sch 40-seamless pipe
0.113 wall thickness
1.065 max. dia.

3. Plug 159A1176P1
SA182-F304
1/4 thick x 0.812 OD

4. Flange 919D610P1 (719E474)
SA182-F304
3.37 thick x 9 5/8 OD
neck 1 1/16 thick x 5.0 OD
2.875 ID

5. Base 137C5311P1
XM-19 ASME SA479
3.0 OD x .884 ID

6. Ring Flange 114B5122P2
SA182-F304
1" thick x 5.0 OD x 1.75 ID

7. Cap Screw 117C4516P2
SA193-B6
6 ea. 1/2 dia. on 4 1/8 bolt circle

8. Plug 175A7961P1
SA182-F304
0.38 thick x 1.307 dia.

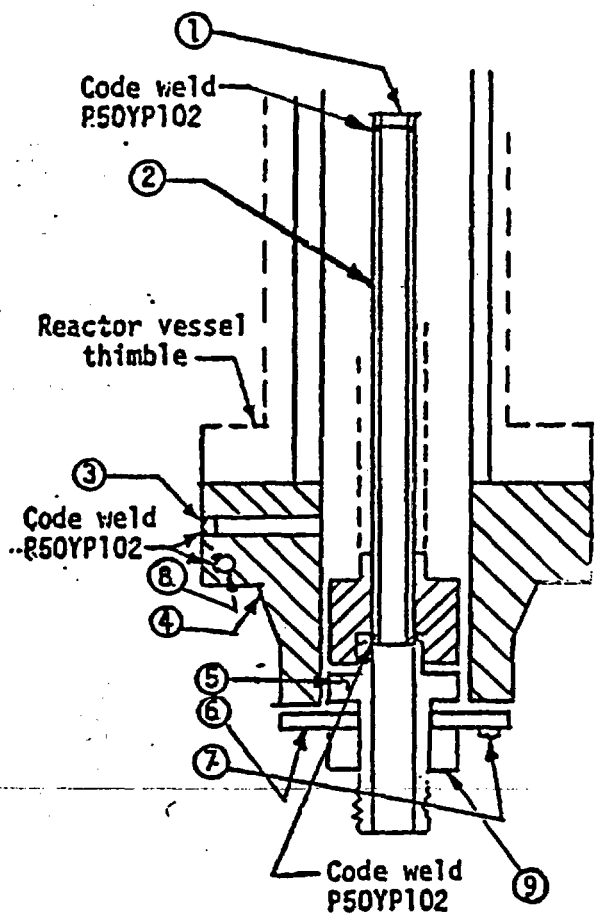

CONTROL ROD DRIVE
DWG - 768E534

9. Nut 137C5934P1
XM-19 SA479
1.30 thick x 2.62 dia.

12017/457

FORM N-2 NPT CERTIFICATE HOLDERS' DATA REPORT FOR NUCLEAR PART AND APPURTENANCES*
*As required by the Provision of the ASME Code Rules, Section III, Div. 1

1813-037
MR 28195 33 of 46

1. (a) Manufactured by General Electric Company, Castle Hayne Rd., Wilmington, N.C.
(Name and address of NPT Certificate Holder)

(b) Manufactured for General Electric Company, San Jose, California (NEBG)
(Name and address of N Certificate Holder for completed nuclear component)

2. Identification-Certificate Holder's Serial No. of Part A6472 Nat'l Bd. No.

(a) Constructed According to Drawing No. 768E534G001 Drawing Prepared by D. L. Paterson

(b) Description of Part Inspected Control Rod Drive, Model #7RDB144DG001

(c) Applicable ASME Code: Section III, Edition 1974, Addenda date W'75, Case No. N207 1361-2 Class 1

3. Remarks: Standard part for use with Reactor. Hydrostatically tested at 1820 psi.
(Brief description of service for which component was designed)

* Total number of sheets - 2

We certify that the statements made in this report are correct and this vessel part or appurtenance as defined in the Code conforms to the rules of construction of the ASME Code Section III.
(The applicable Design Specification and Stress Report are not the responsibility of the NPT Certificate Holder for parts. An NPT Certificate Holder for appurtenances is responsible for furnishing a separate Design Specification and Stress Report if the appurtenance is not included in the component Design Specification and Stress Report.)

Date 7/19 19 83 Signed GE, NEPD-SMD (NPT Certificate Holder) By J. Ottendorfer

Certificate of Authorization Expires June 16, 1984 Certificate of Authorization No. NPT N-1151

CERTIFICATION OF DESIGN FOR APPURTENANCE (when applicable)

Design information on file at GENERAL ELECTRIC CO., SAN JOSE, CALIFORNIA
22A5556, Rev. 2

Stress analysis report on file at GENERAL ELECTRIC CO., SAN JOSE, CALIFORNIA
22A4912, Rev. 2

Design specifications certified by B. N. Sridhar Prof. Eng. State Calif Reg. No. 18345

Stress analysis report certified by B. N. Sridhar Prof. Eng. State Calif Reg. No. 18345

CERTIFICATE OF SHOP INSPECTION

I, the undersigned, holding a valid commission issued by the National Board of Boiler and Pressure Vessel Inspectors and/or the State or Province of North Carolina and employed by Department of Labor of State of North Carolina have inspected the part of a pressure vessel described in this Partial Data Report on 7/19 19 83 and state that to the best of my knowledge and belief, the NPT Certificate Holder has constructed this part in accordance with the ASME Code Section III.

By signing this certificate, neither the Inspector nor his employer makes any warranty, expressed or implied, concerning the part described in this Partial Data Report. Furthermore, neither the Inspector nor his employer shall be liable in any manner for any personal injury or property damage or a loss of any kind arising from or connected with this inspection.

RAF 5-26

Date 7/19 19 83

E. B. Sherrill
Inspector's Signature

Commissions N.C. 723, PA.WC1766, OHIO
National Board, State, Province and Number

*Supplemental sheets in form of lists, sketches or drawings may be used provided (1) size is 8½" x 11", (2) information in items 1-3 on this Data Report is included on each sheet, and (3) each sheet is numbered and number of sheets is recorded in item 3, "Remarks".

(10/77) This form (E00040) may be obtained from the Order Dept., ASME, 345 E. 47th St., New York, N.Y. 1001

FORM N-2 (back)

Items 4–8 incl. to be completed for single wall vessels, jackets of jacketed vessels, or shells of heat exchangers.

4. Shell: Material _____ T.S. _____ Nominal Thickness ____ in. Corrosion Allowance ____ in. Dia. ____ ft. ____ in. Length ____ ft. ____ in.
(Kind & Spec. No.) (Min. of Range Specified)

5. Seams: Long _____ H.T.[1] _____ R.T. _____ Efficiency _____ %

Girth _____ H.T.[1] _____ R.T. _____ No. of Courses _____

6. Heads: (a) Material _____ T.S. _____ (b) Material _____ T.S. _____

Location (Top, bottom, ends)	Thickness	Crown Radius	Knuckle Radius	Elliptical Ratio	Conical Apex Angle	Hemispherical Radius	Flat Diameter	Side to Press. (Conv. or Conc.)
(a)								
(b)								

If removable, bolts used _____ (Material, Spec. No., T.S., Size, Number) Other fastening _____ (Describe or attach sketch)

7. Jacket Closures _____
(Describe as edge and weld, bar, etc. If bar give dimensions, if bolted, describe or sketch)

8. Design pressure[2] 1250 psi at 575 °F

Drop Weight _____
Charpy Impact _____ ft-lb
at temp. of _____ °F

Items 9 and 10 to be completed for tube sections.

9. Tube Sheets: Stationary. Material _____ (Kind & Spec. No.) Dia. _____ (Subject to pressure) Thickness ____ in. Attachment _____ (Welded, Bolted)

Floating. Material _____ Dia. _____ Thickness ____ in. Attachment _____

10. Tubes: Material _____ O.D. ____ in. Thickness _____ inches or gage. Number _____ Type _____ (Str. or U)

Items 11–14 incl. to be completed for inner chambers of jacketed vessels, or channels of heat exchangers.

11. Shell: Material _____ T.S. _____ Nominal Thickness ____ in. Corrosion Allowance ____ in. Dia. ____ ft. ____ in. Length ____ ft. ____ in.
(Kind & Spec. No.) (Min. of Range Specified)

12. Seams: Long _____ H.T.[1] _____ R.T. _____ Efficiency _____ %

Girth _____ H.T.[1] _____ R.T. _____ No. of Courses _____

13. Heads: (a) Material _____ T.S. _____ (b) Material _____ T.S. _____

Location	Thickness	Crown Radius	Knuckle Radius	Elliptical Ratio	Conical Apex Angle	Hemispherical Radius	Flat Diameter	Side to Press. (Conv. or Conc.)
(a) Top, bottom, ends								
(b) Channel								

If removable, bolts used (a) _____ (b) _____ (c) _____ Other fastening _____ (Describe or attach sketch)

14. Design pressure[2] _____ psi at _____ °F

Drop Weight _____
Charpy Impact _____ ft-lb
at temp. of _____ °F

Items below to be completed for all vessels where applicable.

15. Safety Valve Outlets: Number _____ Size _____ Location _____

16. Nozzles:

Purpose (Inlet, Outlet, Drain)	Number	Dia. or Size	Type	Material	Thickness	Reinforcement Material	How Attached

17. Inspection Openings: Manholes, No. _____ Size _____ Location _____
Handholes, No. _____ Size _____ Location _____
Threaded, No. _____ Size _____ Location _____

18. Supports: Skirt _____ (Yes or No) Legs _____ (Number) Legs _____ (Number) Other _____ (Describe) Attached _____ (Where & How)

Sheet 2 of 2

FORM N-2 NPT CERTIFICATE HOLDERS' DATA REPORT FOR NUCLEAR PART AND APPURTENANCES
As required by the Provision of the ASME Code Rules, Section III, Div. 1

1B13-037
MR 28175
34 of 46

1. (a) Manufactured by General Electric Company, Castle Hayne Rd., Wilmington, N.C.
(Name and address of NPT Certificate Holder)

(b) Manufactured for General Electric Company, San Jose, California (NEBG)
(Name and address of N Certificate Holder for completed nuclear component)

2. Identification-Certificate Holder's Serial No. of Part A6472 Nat'l Bd. No.

(a) Constructed According to Drawing No. 768E534G001 Drawing Prepared by D. L. Paterson

(b) Description of Part Inspected Control Rod Drive, Model #7RDB144DG001

(c) Applicable ASME Code: Section III, Edition 1974, Addenda date W'75, Case No. N207 1361-2 Class 1

1. Cap 166B9274P1
(167A2343)
SA182 - F316
3/8 thick x 1 1/16 OD

2. Indicator Pipe 166B9313P1
SA312-TP316
3/4 sch 40-seamless pipe
0.113 wall thickness
1.065 max. dia.

3. Plug 159A1176P1
SA182-F304
1/4 thick x 0.812 OD

4. Flange 919D610P1 (719E474)
SA182-F304
3.37 thick x 9 5/8 OD
neck 1 1/16 thick x 5.0 OD
2.875 ID

5. Base 137C5311P1
XM-19 ASME SA479
3.0 OD x .884 ID

6. Ring Flange 11485122P2
SA182-F304
1" thick x 5.0 OD x 1.75 ID

7. Cap Screw 117C4516P2
SA193-B6
6 ea. 1/2 dia. on 4 1/8 bolt circle

8. Plug 175A7961P1
SA182-F304
0.38 thick x 1.307 dia.

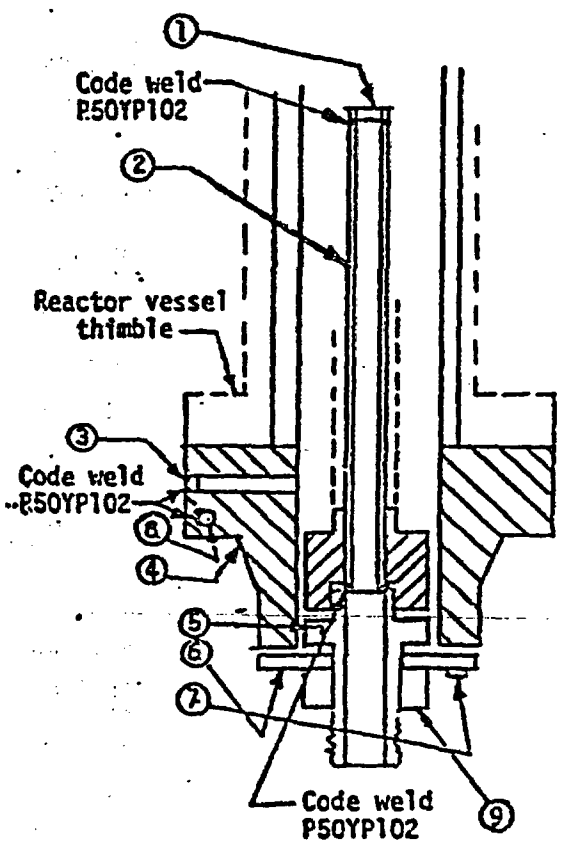

CONTROL ROD DRIVE
DWG - 768E534

9. Nut 137C5934P1
XM-19 SA479
1.30 thick x 2.62 dia.

1648

FORM N-2 NPT CERTIFICATE HOLDERS' DATA REPORT FOR NUCLEAR PART AND APPURTENANCES*

As required by the Provision of the ASME Code Rules, Section III, Div. 1 (1B13-037 35 of 46)

1. (a) Manufactured by General Electric Company, Castle Hayne Rd., Wilmington, N.C.
(Name and address of NPT Certificate Holder)

(b) Manufactured for General Electric Company, San Jose, California (NEBG)
(Name and address of N Certificate Holder for completed nuclear component)

2. Identification-Certificate Holder's Serial No. of Part A4189 Nat'l Bd. No.

(a) Constructed According to Drawing No. 768E534G001 Drawing Prepared by D. L. Peterson

(b) Description of Part Inspected Control Rod Drive, Model #7RDB144DG001

(c) Applicable ASME Code: Section III, Edition 1974, Addenda date W'75, Case No. N207 1361-2 Class 1

3. Remarks: Standard part for use with Reactor. Hydrostatically tested at 1820 psi.
(Brief description of service for which component was designed)

* Total number of sheets - 2

We certify that the statements made in this report are correct and this vessel part or appurtenance as defined in the Code conforms to the rules of construction of the ASME Code Section III.
(The applicable Design Specification and Stress Report are not the responsibility of the NPT Certificate Holder for parts. An NPT Certificate Holder for appurtenances is responsible for furnishing a separate Design Specification and Stress Report if the appurtenance is not included in the component Design Specification and Stress Report.)

Date 6/12 19 81 Signed GE, NEPD-WMD (NPT Certificate Holder) By J. Ottredemann

Certificate of Authorization Expires June 16, 1981 Certificate of Authorization No. NPT N-1151

CERTIFICATION OF DESIGN FOR APPURTENANCE (when applicable)

Design information on file at GE, NEPD-WMD-OA, Castle Hayne Rd., Wilmington, N.C.
22A5556, Rev. 2

Stress analysis report on file at GE, NEPD, San Jose, Calif.
22A4912, Rev. 2

Design specifications certified by B. N. Sridhar Prof. Eng. State Calif Reg. No. 18345

Stress analysis report certified by B. N. Sridhar Prof. Eng. State Calif Reg. No. 18345

CERTIFICATE OF SHOP INSPECTION

I, the undersigned, holding a valid commission issued by the National Board of Boiler and Pressure Vessel Inspectors and/or the State or Province of North Carolina and employed by Department of Labor of State of North Carolina have inspected the part of a pressure vessel described in this Partial Data Report on 6/12 19 81, and state that to the best of my knowledge and belief, the NPT Certificate Holder has constructed this part in accordance with the ASME Code Section III.

By signing this certificate, neither the Inspector nor his employer makes any warranty, expressed or implied, concerning the part described in this Partial Data Report. Furthermore, neither the Inspector nor his employer shall be liable in any manner for any personal injury or property damage or a loss of any kind arising from or connected with this inspection.

Date 6/12 19 81

E. L. Sherrill
Inspector's Signature

Commissions N.C. 723, PA.WC1766, OHIO
National Board, State, Province and No.

*Supplemental sheets in form of lists, sketches or drawings may be used provided (1) size is 8½" x 11", (2) information in items 1-2 on this Data Report is included on each sheet, and (3) each sheet is numbered and number of sheets is recorded in Item 3, "Remarks".

00185

(10/77) This form (E00040) may be obtained from the Order Dept., ASME, 345 E. 47th St., New York, N.Y. 10017

FORM N-2 (back)

Items 4–8 incl. to be completed for single wall vessels, jackets of jacketed vessels, or shells of heat exchangers.

4. Shell: Material _____ (Kind & Spec. No.) T.S. _____ (Min. of Range Specified) Nominal Thickness ____ in. Corrosion Allowance ____ in. Dia. ____ ft. ____ in. Length ____ ft. ____ in.

5. Seams: Long _____ H.T.[1] _____ R.T. _____ Efficiency _____ %

Girth _____ H.T.[1] _____ R.T. _____ No. of Courses _____

6. Heads: (a) Material _____ T.S. _____ (b) Material _____ T.S. _____

Location (Top, bottom, ends)	Thickness	Crown Radius	Knuckle Radius	Elliptical Ratio	Conical Apex Angle	Hemispherical Radius	Flat Diameter	Side to Press. (Conv. or Conc.)
(a)								
(b)								

If removable, bolts used _____ (Material, Spec. No., T.S., Size, Number) Other fastening _____ (Describe or attach sketch)

7. Jacket Closure: _____ (Describe as edges and weld, bar, etc. If bar give dimensions, if bolted, describe or sketch)

8. Design pressure[2] 1250 psi at 575 °F

Drop Weight _____
Charpy Impact _____ ft-lb
at temp. of _____ °F

Items 9 and 10 to be completed for tube sections.

9. Tube Sheets: Stationary. Material _____ (Kind & Spec. No.) Dia. _____ (Subject to pressure) Thickness ____ in. Attachment _____ (Welded, Bolted)

Floating. Material _____ Dia. _____ Thickness ____ in. Attachment _____

10. Tubes: Material _____ O.D. ____ in. Thickness _____ inches or gage. Number _____ Type _____ (Str. or U)

Items 11–14 incl. to be completed for inner chambers of jacketed vessels, or channels of heat exchangers.

11. Shell: Material _____ (Kind & Spec. No.) T.S. _____ (Min. of Range Specified) Nominal Thickness ____ in. Corrosion Allowance ____ in. Dia. ____ ft. ____ in. Length ____ ft. ____ in.

12. Seams: Long _____ H.T.[1] _____ R.T. _____ Efficiency _____ %

Girth _____ H.T.[1] _____ R.T. _____ No. of Courses _____

13. Heads: (a) Material _____ T.S. _____ (b) Material _____ T.S. _____

Location	Thickness	Crown Radius	Knuckle Radius	Elliptical Ratio	Conical Apex Angle	Hemispherical Radius	Flat Diameter	Side to Press. (Conv. or Conc.)
(a) Top, bottom, ends								
(b) Channel								

If removable, bolts used (a) _____ (b) _____ (c) _____ Other fastening _____ (Describe or attach sketch)

14. Design pressure[2] _____ psi at _____ °F

Drop Weight _____
Charpy Impact _____ ft-lb
at temp. of _____ °F

Items below to be completed for all vessels where applicable.

15. Safety Valve Outlets: Number _____ Size _____ Location _____

16. Nozzles:

Purpose (Inlet, Outlet, Drain)	Number	Dia. or Size	Type	Material	Thickness	Reinforcement Material	How Attached

17. Inspection Openings: Manholes, No. _____ Size _____ Location _____
Handholes, No. _____ Size _____ Location _____
Threaded, No. _____ Size _____ Location _____

18. Supports: Skirt _____ (Yes or No) Lugs _____ (Number) Legs _____ (Number) Other _____ (Describe) Attached _____ (Where & How)

[1] If Postweld Heat-Treated.
[2] List other internal or external pressure with coincident temperature when applicable.

FORM N-2 NPT CERTIFICATE HOLDERS' DATA REPORT FOR NUCLEAR PART AND APPURTENANCES*
As required by the Provision of the ASME Code Rules, Section III, Div. 1 {1813-037 34 of 46}

1. (a) Manufactured by General Electric Company, Castle Hayne Rd., Wilmington, N.C.
(Name and address of NPT Certificate Holder)

(b) Manufactured for General Electric Company, San Jose, California (NEBG)
(Name and address of N Certificate Holder for completed nuclear component)

2. Identification-Certificate Holder's Serial No. of Part A4189 Nat'l Bd. No.

(a) Constructed According to Drawing No. 768E534G001 Drawing Prepared by D. L. Peterson

(b) Description of Part Inspected Control Rod Drive, Model #7RDB144DG001

(c) Applicable ASME Code: Section III, Edition 1974, Addenda date W'75, Case No. N207 1361-2 Class 1

1. Cap 166B9274P1
(167A2343)
SA182 - F316
3/8 thick x 1 1/16 OD

2. Indicator Pipe 166B9313P1
SA312-TP316
3/4 sch 40-seamless pipe
0.113 wall thickness
1.065 max. dia.

3. Plug 159A1176P1
SA182-F304
1/4 thick x 0.812 OD

4. Flange 919D610P1 (719E474)
SA182-F304
3.37 thick x 9 5/8 OD
neck 1 1/16 thick x 5.0 OD
2.875 ID

5. Base 137C5311P1
XM-19 ASME SA479
3.0 OD x .884 ID

6. Ring Flange 11485122P2
SA182-F304
1" thick x 5.0 OD x 1.75 ID

7. Cap Screw 117C4516P2
SA193-B6
6 ea. 1/2 dia. on 4 1/8 bolt circle

8. Plug 175A7961P1
SA182-F304
0.38 thick x 1.307 dia.

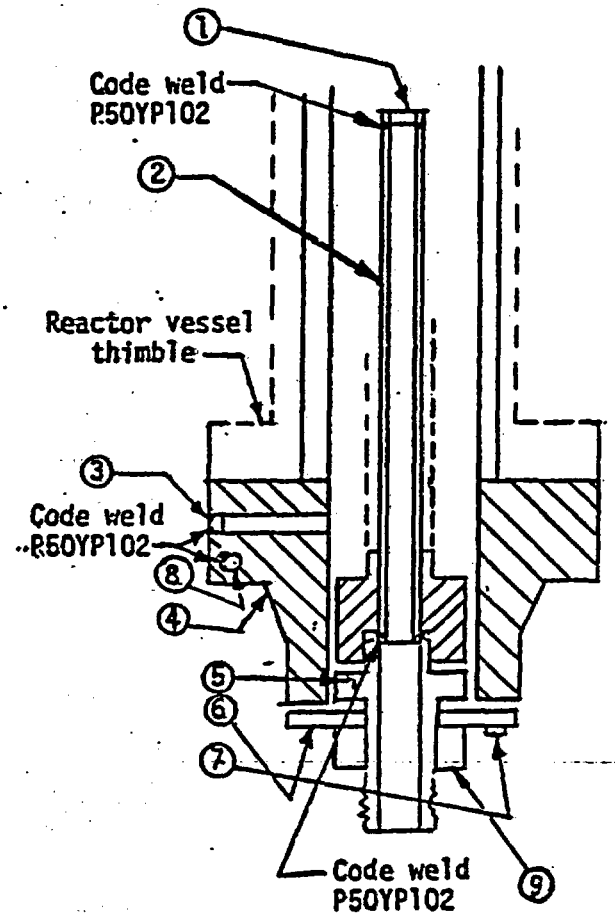

CONTROL ROD DRIVE
DWG - 768E534

9. Nut 137C5934P1
XM-19 SA479
1.30 thick x 2.62 dia.

00189

FORM N-2 NPT CERTIFICATE HOLDERS' DATA REPORT FOR NUCLEAR PART AND APPURTENANCES*

As required by the Provision of the ASME Code Rules. Section III. Div. 1 {1B13-037 37 of 46}

1. (a) Manufactured by General Electric Company, Castle Hayne Rd., Wilmington, N.C.
(Name and address of NPT Certificate Holder)

(b) Manufactured for General Electric Company, San Jose, California (NEBG)
(Name and address of N Certificate Holder for completed nuclear component)

2. Identification-Certificate Holder's Serial No. of Part A4269 Nat'l Bd. No. _____

(a) Constructed According to Drawing No. 768E534G001 Drawing Prepared by D. L. Paterson

(b) Description of Part Inspected Control Rod Drive, Model #7RDB144DG001

(c) Applicable ASME Code: Section III, Edition 1974, Addenda date W'75, Case No. N207 1361-2 Class 1

3. Remarks: Standard part for use with Reactor. Hydrostatically tested at 1820 psi.
(Brief description of service for which component was designed)

* Total number of sheets - 2

We certify that the statements made in this report are correct and this vessel part or appurtenance as defined in the Code conforms to the rules of construction of the ASME Code Section III.
(The applicable Design Specification and Stress Report are not the responsibility of the NPT Certificate Holder for parts. An NPT Certificate Holder for appurtenances is responsible for furnishing a separate Design Specification and Stress Report if the appurtenance is not included in the component Design Specification and Stress Report.)

Date 7/23 19 81 Signed GE, NEPD-WMD-QA By J. Stoudenmire
(NPT Certificate Holder)

Certificate of Authorization Expires September 15, 1981 Certificate of Authorization No. NPT N-1151

CERTIFICATION OF DESIGN FOR APPURTENANCE (when applicable)

Design information on file at GE, NEPD-WMD-QA, Castle Hayne Rd., Wilmington, N.C.
22A5556, Rev. 2

Stress analysis report on file at GE, NEPD-WMD-QA, Castle Hayne Rd., Wilmington, N.C.
22A4912, Rev. 2

Design specifications certified by B. N. Sridhar Prof. Eng. State Calif Reg. No. 18345

Stress analysis report certified by B. N. Sridhar Prof. Eng. State Calif Reg. No. 18345

CERTIFICATE OF SHOP INSPECTION

I, the undersigned, holding a valid commission issued by the National Board of Boiler and Pressure Vessel Inspectors and/or the State or Province of North Carolina and employed by Department of Labor of State of North Carolina have inspected the part of a pressure vessel described in this Partial Data Report on 7/23 1981, and state that to the best of my knowledge and belief, the NPT Certificate Holder has constructed this part in accordance with the ASME Code Section III.

By signing this certificate, neither the Inspector nor his employer makes any warranty, expressed or implied, concerning the part described in this Partial Data Report. Furthermore, neither the Inspector nor his employer shall be liable in any manner for any personal injury or property damage or a loss of any kind arising from or connected with this inspection.

Date 7/23 19 81 N.C. 723, PA.WC1766, OHIO

Ed Sherrill
Inspector's Signature

Commissions _____
National Board, State, Province and No.

00894

*Supplemental sheets in form of lists, sketches or drawings may be used provided (1) size is 8½" x 11", (2) information in items 1-2 on this Data Report is included on each sheet, and (3) each sheet is numbered and number of sheets is recorded in item 3, "Remarks"

(10/77) This form (E000.40) may be obtained from the Order Dept., ASME, 345 E. 47th St., New York, N.Y. 10017

FORM N-2 (back)

Items 4–8 incl. to be completed for single wall vessels, jackets of jacketed vessels, or shells of heat exchangers.

4. Shell: Material ____ (Kind & Spec. No.) T.S. ____ (Min. of Range Specified) Nominal Thickness ____ in. Corrosion Allowance ____ in. Dia. ____ ft. ____ in. Length ____ ft. ____ in.

5. Seams: Long ____ H.T.[1] ____ R.T. ____ Efficiency ____ %

Girth ____ H.T.[1] ____ R.T. ____ No. of Courses ____

6. Heads: (a) Material ____ T.S. ____ (b) Material ____ T.S. ____

Location (Top, bottom, ends)	Thickness	Crown Radius	Knuckle Radius	Elliptical Ratio	Conical Apex Angle	Hemispherical Radius	Flat Diameter	Side to Press. (Conv. or Conc.)
(a)								
(b)								

If removable, bolts used ____ (Material, Spec. No., T.S., Size, Number) Other fastening ____ (Describe or attach sketch)

7. Jacket Closures: ____ (Describe as edge and weld, bar, etc. If bar give dimensions, if bolted, describe or sketch)

8. Design pressure[2] 1250 psi at 575 °F Drop Weight ____ Charpy Impact ____ ft-lb at temp. of ____ °F

Items 9 and 10 to be completed for tube sections

9. Tube Sheets: Stationary. Material ____ (Kind & Spec. No.) Dia. ____ (Subject to pressure) Thickness ____ in. Attachment ____ (Welded, Bolted)

Floating. Material ____ Dia. ____ Thickness ____ in. Attachment ____

10. Tubes: Material ____ O.D. ____ in. Thickness ____ inches or gage. Number ____ Type ____ (Str. or U)

Items 11–14 incl. to be completed for inner chambers of jacketed vessels, or channels of heat exchangers.

11. Shell: Material ____ (Kind & Spec. No.) T.S. ____ (Min. of Range Specified) Nominal Thickness ____ in. Corrosion Allowance ____ in. Dia. ____ ft. ____ in. Length ____ ft. ____ in.

12. Seams: Long ____ H.T.[1] ____ R.T. ____ Efficiency ____ %

Girth ____ H.T.[1] ____ R.T. ____ No. of Courses ____

13. Heads (a) Material ____ T.S. ____ (b) Material ____ T.S. ____

Location	Thickness	Crown Radius	Knuckle Radius	Elliptical Ratio	Conical Apex Angle	Hemispherical Radius	Flat Diameter	Side to Press. (Conv. or Conc.)
(a) Top, bottom, ends								
(b) Channel								

If removable, bolts used (a) ____ (b) ____ (c) ____ Other fastening ____ (Describe or attach sketch)

14. Design pressure[2] ____ psi at ____ °F Drop Weight ____ Charpy Impact ____ ft-lb at temp. of ____ °F

Items below to be completed for all vessels where applicable.

15. Safety Valve Outlets: Number ____ Size ____ Location ____

16. Nozzles:

Purpose (Inlet, Outlet, Drain)	Number	Dia. or Size	Type	Material	Thickness	Reinforcement Material	How Attached

17. Inspection Openings: Manholes, No. ____ Size ____ Location ____
Handholes, No. ____ Size ____ Location ____
Threaded, No. ____ Size ____ Location ____

18. Supports: Skirt ____ (Yes or No) Lugs ____ (Number) Legs ____ (Number) Other ____ (Describe) Attached ____ (Where & How)

[1] If Postweld Heat-Treated.
[2] List other internal or external pressure with concurrent temperature when applicable.

FORM N-2 NPT CERTIFICATE HOLDERS' DATA REPORT FOR NUCLEAR PART AND APPURTENANCES*
As required by the Provision of the ASME Code Rules, Section III, Div. 1 {1B13-037 38 of 46}

169

1. (a) Manufactured by General Electric Company, Castle Hayne Rd., Wilmington, N.C.
(Name and address of NPT Certificate Holder)

(b) Manufactured for General Electric Company, San Jose, California (NEBG)
(Name and address of N Certificate Holder for completed nuclear component)

2. Identification-Certificate Holder's Serial No. of Part A4269 Nat'l Bd. No. _____

(a) Constructed According to Drawing No. 768E534G001 Drawing Prepared by D. L. Peterson

(b) Description of Part Inspected Control Rod Drive, Model #7RDB144DG001

(c) Applicable ASME Code: Section III, Edition 1974, Addenda date W'75, Case No. N207 1361-2 Class 1

1. Cap 166B9274P1
(167A2343)
SA182 - F316
3/8 thick x 1 1/16 OD

2. Indicator Pipe 166B9313P1
SA312-TP316
3/4 sch 40-seamless pipe
0.113 wall thickness
1.065 max. dia.

3. Plug 159A1176P1
SA182-F304
1/4 thick x 0.812 OD

4. Flange 919D610P1 (719E474)
SA182-F304
3.37 thick x 9 5/8 OD
neck 1 1/16 thick x 5.0 OD
2.875 ID

5. Base 137C5311P1
XM-19 ASME SA479
3.0 OD x .884 ID

6. Ring Flange 114B5122P2
SA182-F304
1" thick x 5.0 OD x 1.75 ID

7. Cap Screw 117C4516P2
SA193-B6
6 ea. 1/2 dia. on 4 1/8 bolt circle

8. Plug 175A7961P1
SA182-F304
0.38 thick x 1.307 dia.

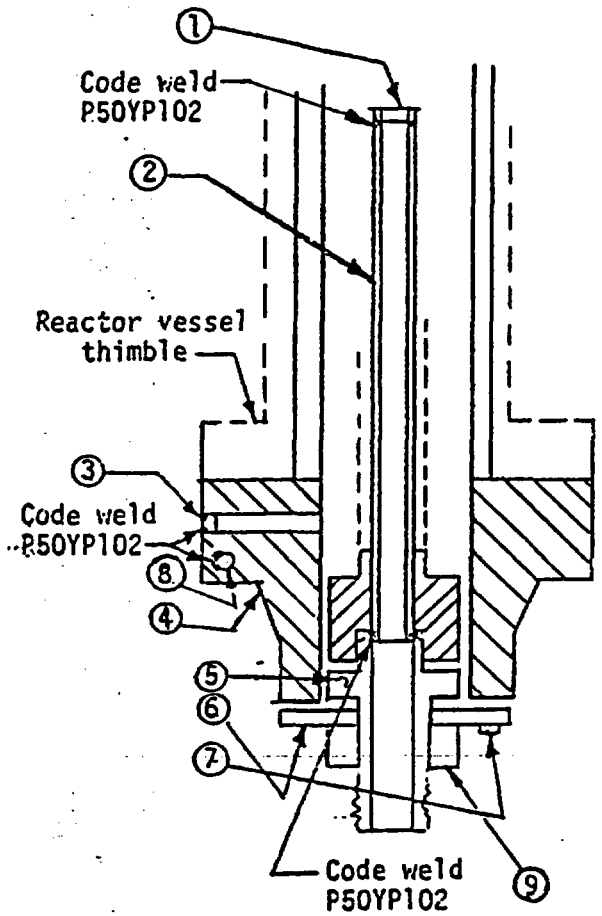

CONTROL ROD DRIVE
DWG - 768E534

9. Nut 137C5934P1
XM-19 SA479
1.30 thick x 2.62 dia.

00895

FORM N-2 NPT CERTIFICATE HOLDERS' DATA REPORT FOR NUCLEAR PART AND APPURTENANCES*

As required by the Provision of the ASME Code Rules, Section III, Div. 1 (1B13-037 39 & 46)

1. (a) Manufactured by General Electric Company, Castle Hayne Rd., Wilmington, N.C.
(Name and address of NPT Certificate Holder)

(b) Manufactured for General Electric Company, San Jose, California (NEBG)
(Name and address of N Certificate Holder for completed nuclear component)

2. Identification-Certificate Holder's Serial No. of Part A5681 Nat'l Bd. No.

(a) Constructed According to Drawing No. 768E534G001 Drawing Prepared by D. L. Peterson

(b) Description of Part Inspected Control Rod Drive, Model #7RDB144DG001

(c) Applicable ASME Code: Section III, Edition 1974, Addenda date W'75, Case No. N207 1361-2 Class 1

3. Remarks: Standard part for use with Reactor. Hydrostatically tested at 1820 psi.
(Brief description of service for which component was designed)

* Total number of sheets - 2

We certify that the statements made in this report are correct and this vessel part or appurtenance as defined in the Code conforms to the rules of construction of the ASME Code Section III.
(The applicable Design Specification and Stress Report are not the responsibility of the NPT Certificate Holder for parts. An NPT Certificate Holder for appurtenances is responsible for furnishing a separate Design Specification and Stress Report if the appurtenance is not included in the component Design Specification and Stress Report.)

Date 5/1 19 81 Signed GE, NEPD-WMD-QA By J. Estrada
(NPT Certificate Holder)

Certificate of Authorization Expires June 16, 1981 Certificate of Authorization No. NPT N-1151

CERTIFICATION OF DESIGN FOR APPURTENANCE (when applicable)

Design information on file at GE, NEPD-WMD-QA, Castle Hayne Rd., Wilmington, N.C.
22A5556, Rev. 1

Stress analysis report on file at GE, NEPD-WMD-QA, Castle Hayne Rd., Wilmington, N.C.
22A4912, Rev. 2

Design specifications certified by B. N. Sridhar Prof. Eng. State Calif Reg. No. 18345

Stress analysis report certified by B. N. Sridhar Prof. Eng. State Calif Reg. No. 18345

CERTIFICATE OF SHOP INSPECTION

I, the undersigned, holding a valid commission issued by the National Board of Boiler and Pressure Vessel Inspectors and/or the State or Province of North Carolina and employed by Department of Labor of State of North Carolina have inspected the part of a pressure vessel described in this Partial Data Report on 5/1 19 81, and state that to the best of my knowledge and belief, the NPT Certificate Holder has constructed this part in accordance with the ASME Code Section III.

By signing this certificate, neither the Inspector nor his employer makes any warranty, expressed or implied, concerning the part described in this Partial Data Report. Furthermore, neither the Inspector nor his employer shall be liable in any manner for any personal injury or property damage or a loss of any kind arising from or connected with this inspection.

Date 5/1 19 81

E. L. Sheild
Inspector's Signature

Commissions N.C. 723, PA WC1766, OHIO
National Board, State, Province and No.

*Supplemental sheets in form of lists, sketches or drawings may be used provided (1) size is 8½" x 11", (2) information in items 1-2 on this Data Report is included on each sheet, and (3) each sheet is numbered and number of sheets is recorded in item 3, "Remarks".

00296

110/77 This form (E00040) may be obtained from the Order Dept., ASME, 345 E. 47th St., New York, N.Y. 10017

FORM N-2 (back)

Items 4–8 Incl. to be completed for single wall vessels, jackets of jacketed vessels, or shells of heat exchangers.

4. Shell: Material _____ T.S. _____ Nominal Thickness ____ in. Corrosion Allowance ____ in. Dia. ____ ft. ____ in. Length ____ ft. ____ in.
(Kind & Spec. No.) (Min. of Range Specified)

5. Seams: Long _____ H.T.[1] _____ R.T. _____ Efficiency _____ %

Girth _____ H.T.[1] _____ R.T. _____ No. of Courses _____

6. Heads: (a) Material _____ T.S. _____ (b) Material _____ T.S. _____

Location (Top, bottom, ends)	Thickness	Crown Radius	Knuckle Radius	Elliptical Ratio	Conical Apex Angle	Hemispherical Radius	Flat Diameter	Side to Press. (Conv. or Conc.)
(a)								
(b)								

If removable, bolts used _____ (Material, Spec. No., T.S., Size, Number) Other fastening _____ (Describe or attach sketch)

7. Jacket Closure: _____
(Describe as edge and weld, bar, etc. If bar give dimensions, if bolted, describe or sketch)

8. Design pressure[2] 1250 psi at 575 °F

Drop Weight _____
Charpy Impact _____ ft-lb
at temp. of _____ °F

Items 9 and 10 to be completed for tube sections.

9. Tube Sheets: Stationary. Material _____ (Kind & Spec. No.) Dia. _____ (Subject to pressure) Thickness ____ in. Attachment _____ (Welded, Bolted)

Floating. Material _____ Dia. _____ Thickness ____ in. Attachment _____

10. Tubes: Material _____ O.D. ____ in. Thickness _____ inches or gage. Number _____ Type _____ (Str. or U)

Items 11–14 incl. to be completed for inner chambers of jacketed vessels, or channels of heat exchangers.

11. Shell: Material _____ T.S. _____ Nominal Thickness ____ in. Corrosion Allowance ____ in. Dia. ____ ft. ____ in. Length ____ ft. ____ in.
(Kind & Spec. No.) (Min. of Range Specified)

12. Seams: Long _____ H.T.[1] _____ R.T. _____ Efficiency _____ %

Girth _____ H.T.[1] _____ R.T. _____ No. of Courses _____

13. Heads (a) Material _____ T.S. _____ (b) Material _____ T.S. _____

Location	Thickness	Crown Radius	Knuckle Radius	Elliptical Ratio	Conical Apex Angle	Hemispherical Radius	Flat Diameter	Side to Press. (Conv. or Conc.)
(a) Top, bottom, ends								
(b) Channel								

If removable, bolts used (a) _____ (b) _____ (c) _____ Other fastening _____ (Describe or attach sketch)

14. Design pressure[2] _____ psi at _____ °F

Drop Weight _____
Charpy Impact _____ ft-lb
at temp. of _____ °F

Items below to be completed for all vessels where applicable.

15. Safety Valve Outlets: Number _____ Size _____ Location _____

16. Nozzles:

Purpose (Inlet, Outlet, Drain)	Number	Dia. or Size	Type	Material	Thickness	Reinforcement Material	How Attached

17. Inspection Openings: Manholes, No. _____ Size _____ Location _____
Handholes, No. _____ Size _____ Location _____
Threaded, No. _____ Size _____ Location _____

18. Supports: Skirt _____ (Yes or No) Lugs _____ (Number) Legs _____ (Number) Other _____ (Describe) Attached _____ (Where & How)

[1] If Postweld Heat-Treated.
[2] List other internal or external pressure with coincident temperature when applicable.

FORM N-2 NPT CERTIFICATE HOLDERS' DATA REPORT FOR NUCLEAR PART AND APPURTENANCES*

As required by the Provision of the ASME Code Rules, Section III, Div. 1 {1B13-037 40 of 46} 1655

1. (a) Manufactured by General Electric Company, Castle Hayne Rd., Wilmington, N.C.
(Name and address of NPT Certificate Holder)

(b) Manufactured for General Electric Company, San Jose, California (NEBG)
(Name and address of N Certificate Holder for completed nuclear component)

2. Identification-Certificate Holder's Serial No. of Part A5681 Nat'l Bd. No. _____

(a) Constructed According to Drawing No. 768E534G001 Drawing Prepared by D. L. Peterson

(b) Description of Part Inspected Control Rod Drive, Model #7RDB144DG001

(c) Applicable ASME Code: Section III, Edition 1974, Addenda date W'75, Case No. N207 1361-2 Class 1

1. Cap 166B9274P1
(167A2343)
SA182 - F316
3/8 thick x 1 1/16 OD

2. Indicator Pipe 166B9313P1
SA312-TP316
3/4 sch 40-seamless pipe
0.113 wall thickness
1.065 max. dia.

3. Plug 159A1176P1
SA182-F304
1/4 thick x 0.812 OD

4. Flange 919D610P1 (719E474)
SA182-F304
3.37 thick x 9 5/8 OD
neck 1 1/16 thick x 5.0 OD
2.875 ID

5. Base 137C5311P1
XM-19 ASME SA479
3.0 OD x .884 ID

6. Ring Flange 114B5122P2
SA182-F304
1" thick x 5.0 OD x 1.75 ID

7. Cap Screw 117C4516P2
SA193-B6
6 ea. 1/2 dia. on 4 1/8 bolt circle

8. Plug 175A7961P1
SA182-F304
0.38 thick x 1.307 dia.

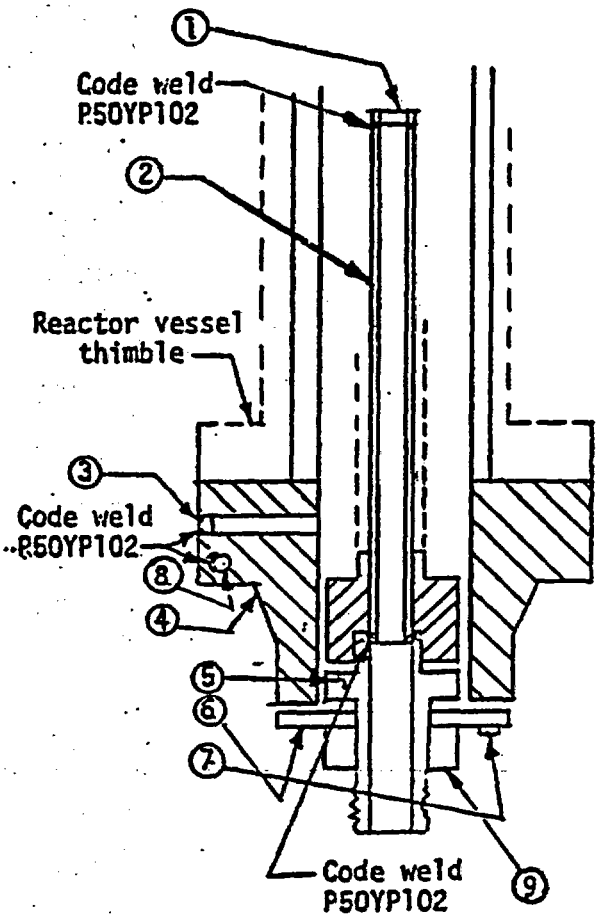

CONTROL ROD DRIVE
DWG - 768E534

9. Nut 137C5934P1
XM-19 SA479
1.30 thick x 2.62 dia.

00297

FORM N-2 NPT CERTIFICATE HOLDERS' DATA REPORT FOR NUCLEAR PART AND APPURTENANCES*

As required by the Provision of the ASME Code Rules, Section III, Div. 1

1013-037
141' of 465

1. (a) Manufactured by General Electric Company, Castle Hayne Rd., Wilmington, N.C.
(Name and address of NPT Certificate Holder)

(b) Manufactured for General Electric Company, San Jose, California (NEBG)
(Name and address of N Certificate Holder for completed nuclear component)

2. Identification-Certificate Holder's Serial No. of Part A5124 Nat'l Bd. No.

(a) Constructed According to Drawing No. 768E534G001 Drawing Prepared by D. L. Peterson

(b) Description of Part Inspected Control Rod Drive, Model #7RDB144DG001

(c) Applicable ASME Code: Section III, Edition 1974, Addenda date W'75, Case No. N207 1361-2 Class 1

3. Remarks: Standard part for use with Reactor. Hydrostatically tested at 1820 psi.
(Brief description of service for which component was designed)

* Total number of sheets - 2

We certify that the statements made in this report are correct and this vessel part or appurtenance as defined in the Code conforms to the rules of construction of the ASME Code Section III.
(The applicable Design Specification and Stress Report are not the responsibility of the NPT Certificate Holder for parts. An NPT Certificate Holder for appurtenances is responsible for furnishing a separate Design Specification and Stress Report if the appurtenance is not included in the component Design Specification and Stress Report.)

Date 8/26/ 19 81 Signed GE, NEPD-WMD By J. Stoudenmire
(NPT Certificate Holder)

Certificate of Authorization Expires September 15, 1981 Certificate of Authorization No. NPT N-1151

CERTIFICATION OF DESIGN FOR APPURTENANCE (when applicable)

Design information on file at GE, NEPD-WMD-OA, Castle Hayne Rd., Wilmington, N.C.
22A5556, Rev. 2

Stress analysis report on file at GE, NEPD, San Jose, Calif.
22A4912, Rev. 2

Design specifications certified by B. N. Sridhar Prof. Eng. State Calif Reg. No. 18345

Stress analysis report certified by B. N. Sridhar Prof. Eng. State Calif Reg. No. 18345

CERTIFICATE OF SHOP INSPECTION

I, the undersigned, holding a valid commission issued by the National Board of Boiler and Pressure Vessel Inspectors and/or the State or Province of North Carolina and employed by Department of Labor of State of North Carolina have inspected the part of a pressure vessel described in this Partial Data Report on 8/26/ 19 81 and state that to the best of my knowledge and belief, the NPT Certificate Holder has constructed this part in accordance with the ASME Code Section III.

By signing this certificate, neither the Inspector nor his employer makes any warranty, expressed or implied, concerning the part described in this Partial Data Report. Furthermore, neither the Inspector nor his employer shall be liable in any manner for any personal injury or property damage or a loss of any kind arising from or connected with this inspection.

Date 8/26/ 19 81 N.C. 723, PA.WC1766, OWG 00348

E. J. Sherrill
Inspector's Signature

Commissions
National Board, State, Province and No.

*Supplemental sheets in form of lists, sketches or drawings may be used provided (1) size is 8½" x 11", (2) information in items 1-2 on this Data Report is included on each sheet, and (3) each sheet is numbered and number of sheets is recorded in Item 3, "Remarks".

FORM N-2 (back)

Items 4–8 incl. to be completed for single wall vessels, jackets of jacketed vessels, or shells of heat exchangers.

4. Shell: Material _____ (Kind & Spec. No.) T.S. _____ (Min. of Range Specified) Nominal Thickness ____ in. Corrosion Allowance ____ in. Dia. ____ ft. ____ in. Length ____ ft. ____ in.

5. Seams: Long _____ H.T.[1] _____ R.T. _____ Efficiency _____ %

   Girth _____ H.T.[1] _____ R.T. _____ No. of Courses _____

6. Heads: (a) Material _____ T.S. _____ (b) Material _____ T.S. _____

Location (Top, bottom, ends)	Thickness	Crown Radius	Knuckle Radius	Elliptical Ratio	Conical Apex Angle	Hemispherical Radius	Flat Diameter	Side to Press. (Conv. or Conc.)
(a)								
(b)								

If removable, bolts used _____ (Material, Spec. No., T.S., Size, Number) Other fastening _____ (Describe or attach sketch)

7. Jacket Closure: _____ (Describe as ogee and weld, bar, etc. If bar give dimensions, if bolted, describe or sketch)

8. Design pressure[2] 1250 psi at 575 °F Drop Weight _____ Charpy Impact _____ ft-lb at temp. of _____ °F

Items 9 and 10 to be completed for tube sections

9. Tube Sheets: Stationary. Material _____ (Kind & Spec. No.) Dia. _____ (Subject to pressure) Thickness ____ in. Attachment _____ (Welded, Bolted)

   Floating. Material _____ Dia. _____ Thickness ____ in. Attachment _____

10. Tubes: Material _____ O.D. ____ in. Thickness _____ inches or gage. Number _____ Type _____ (Str. or U)

Items 11–14 incl. to be completed for inner chambers of jacketed vessels, or channels of heat exchangers.

11. Shell: Material _____ (Kind & Spec. No.) T.S. _____ (Min. of Range Specified) Nominal Thickness ____ in. Corrosion Allowance ____ in. Dia. ____ ft. ____ in. Length ____ ft. ____ in.

12. Seams: Long _____ H.T.[1] _____ R.T. _____ Efficiency _____ %

    Girth _____ H.T.[1] _____ R.T. _____ No. of Courses _____

13. Heads (a) Material _____ T.S. _____ (b) Material _____ T.S. _____

Location	Thickness	Crown Radius	Knuckle Radius	Elliptical Ratio	Conical Apex Angle	Hemispherical Radius	Flat Diameter	Side to Press. (Conv. or Conc.)
(a) Top, bottom, ends								
(b) Channel								

If removable, bolts used (a) _____ (b) _____ (c) _____ Other fastening _____ (Describe or attach sketch)

14. Design pressure[2] _____ psi at _____ °F Drop Weight _____, Charpy Impact _____ ft-lb at temp. of _____ °F

Items below to be completed for all vessels where applicable.

15. Safety Valve Outlets: Number _____ Size _____ Location _____

16. Nozzles:

Purpose (Inlet, Outlet, Drain)	Number	Dia. or Size	Type	Material	Thickness	Reinforcement Material	How Attached

17. Inspection Openings: Manholes, No. _____ Size _____ Location _____
    Handholes, No. _____ Size _____ Location _____
    Threaded, No. _____ Size _____ Location _____

18. Supports: Skirt _____ (Yes or No) Lugs _____ (Number) Legs _____ (Number) Other _____ (Describe) Attached _____ (Where & How)

[1] If Postweld Heat-Treated.

FORM N-2 NPT CERTIFICATE HOLDERS' DATA REPORT FOR NUCLEAR PART AND APPURTENANCES

As required by the Provision of the ASME Code Rules, Section III, Div. 1 (1613-037 42 of 46)

1. (a) Manufactured by General Electric Company, Castle Hayne Rd., Wilmington, N.C.
(Name and address of NPT Certificate Holder)

(b) Manufactured for General Electric Company, San Jose, California (NEBG)
(Name and address of N Certificate Holder for completed nuclear component)

2. Identification-Certificate Holder's Serial No. of Part A5124 Nat'l Bd. No.

(a) Constructed According to Drawing No. 768E534G001 Drawing Prepared by D. L. Peterson

(b) Description of Part Inspected Control Rod Drive, Model #7RDB144DG001

(c) Applicable ASME Code: Section III, Edition 1974, Addenda date W'75, Case No. N207 1361-2 Class 1

1. Cap 166B9274P1
(167A2343)
SA182 - F316
3/8 thick x 1 1/16 OD

2. Indicator Pipe 166B9313P1
SA312-TP316
3/4 sch 40-seamless pipe
0.113 wall thickness
1.065 max. dia.

3. Plug 159A1176P1
SA182-F304
1/4 thick x 0.812 OD

4. Flange 919D610P1 (719E474)
SA182-F304
3.37 thick x 9 5/8 OD
neck 1 1/16 thick x 5.0 OD
2.875 ID

5. Base 137C5311P1
XM-19 ASME SA479
3.0 OD x .884 ID

6. Ring Flange 114B5122P2
SA182-F304
1" thick x 5.0 OD x 1.75 ID

7. Cap Screw 117C4516P2
SA193-B6
6 ea. 1/2 dia. on 4 1/8 bolt circle

8. Plug 175A7961P1
SA182-F304
0.38 thick x 1.307 dia.

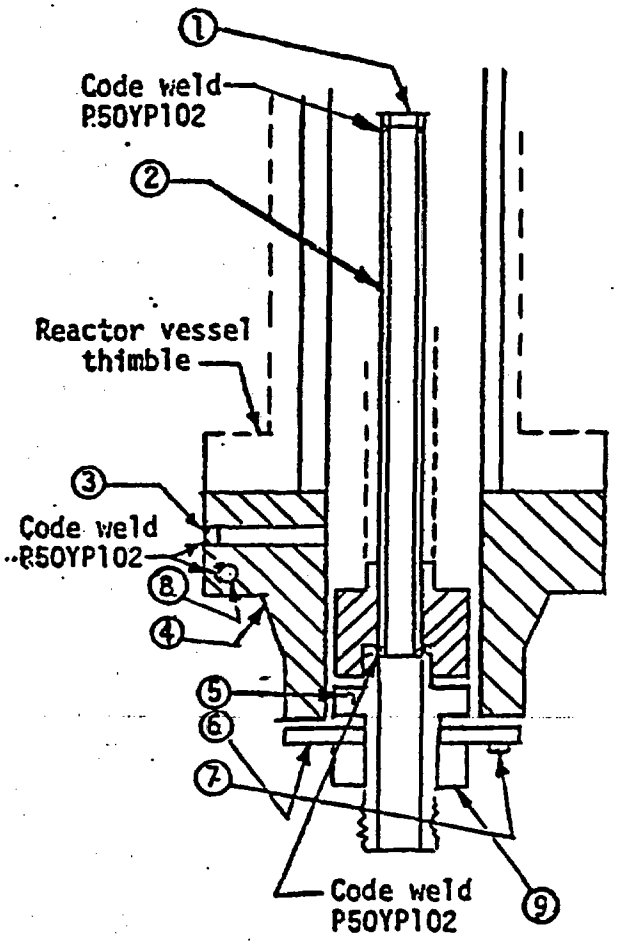

CONTROL ROD DRIVE
DWG - 768E534

9. Nut 137C5934P1
XM-19 SA479
1.30 thick x 2.62 dia.

00549

1B13-037
SHT. 43 of 46

Sheet 1 of 2

FORM N-2 NPT CERTIFICATE HOLDERS' DATA REPORT FOR NUCLEAR PART AND APPURTENANCES*

As required by the Provision of the ASME Code Rules, Section III, Div. 1

1. (a) Manufactured by General Electric Company, Castle Hayne Rd., Wilmington, N.C.
(Name and address of NPT Certificate Holder)

(b) Manufactured for General Electric Company, San Jose, California (NEBG)
(Name and address of N Certificate Holder for completed nuclear component)

2. Identification-Certificate Holder's Serial No. of Part A5568 Nat'l Bd. No.

(a) Constructed According to Drawing No. 768E534G001 Drawing Prepared by D. L. Peterson

(b) Description of Part Inspected Control Rod Drive, Model #7RDB144DG001

(c) Applicable ASME Code: Section III, Edition 1974, Addenda date W'75, Case No. N207 1361-2 Class 1

3. Remarks: Standard part for use with Reactor. Hydrostatically tested at 1820 psi.
(Brief description of service for which component was designed)

* Total number of sheets - 2

We certify that the statements made in this report are correct and this vessel part or appurtenance as defined in the Code conforms to the rules of construction of the ASME Code Section III.
(The applicable Design Specification and Stress Report are not the responsibility of the NPT Certificate Holder for parts. An NPT Certificate Holder for appurtenances is responsible for furnishing a separate Design Specification and Stress Report if the appurtenance is not included in the component Design Specification and Stress Report.)

Date 8/26/ 19 81 Signed GE, NEPD-WMD (NPT Certificate Holder) By J. Ottedenimer

Certificate of Authorization Expires September 15, 1981 Certificate of Authorization No. NPT N-1151

CERTIFICATION OF DESIGN FOR APPURTENANCE (when applicable)

Design information on file at GE, NEPD-WMD-OA, Castle Hayne Rd., Wilmington, N.C.
22A5556, Rev. 2

Stress analysis report on file at GE, NEPD, San Jose, Calif.
22A4912, Rev. 2

Design specifications certified by B. N. Sridhar Prof. Eng. State Calif Reg. No. 18345

Stress analysis report certified by B. N. Sridhar Prof. Eng. State Calif Reg. No. 18345

CERTIFICATE OF SHOP INSPECTION

I, the undersigned, holding a valid commission issued by the National Board of Boiler and Pressure Vessel Inspectors and/or the State or Province of North Carolina and employed by Department of Labor of State of North Carolina have inspected the part of a pressure vessel described in this Partial Data Report on 8/26/ 19 81, and state that to the best of my knowledge and belief, the NPT Certificate Holder has constructed this part in accordance with the ASME Code Section III.

By signing this certificate, neither the Inspector nor his employer makes any warranty, expressed or implied, concerning the part described in this Partial Data Report. Furthermore, neither the Inspector nor his employer shall be liable in any manner for any personal injury or property damage or a loss of any kind arising from or connected with this inspection.

Date 8/26/ 19 81

E. P. Sherrill
Inspector's Signature

Commissions N.C. 723, PA.WC1766, OHIO 00638
National Board, State, Province and No.

*Supplemental sheets in form of lists, sketches or drawings may be used provided (1) size is 8½" x 11", (2) information in Items 1-2 on this Data Report is included on each sheet, and (3) each sheet is numbered and number of sheets is recorded in Item 3, "Remarks".

FORM N-2 (back) 1B13-037 SHT. 43 of 46 5/29/03

Items 4–8 incl. to be completed for single wall vessels, jackets of jacketed vessels, or shells of heat exchangers.

4. Shell: Material _____ (Kind & Spec. No.) T.S. _____ (Min. of Range Specified) Nominal Thickness ____ in. Corrosion Allowance ____ in. Dia. ____ ft. ____ in. Length ____ ft. ____ in.

5. Seams: Long _____ H.T.[1] _____ R.T. _____ Efficiency _____ %

Girth _____ H.T.[1] _____ R.T. _____ No. of Courses _____

6. Heads: (a) Material _____ T.S. _____ (b) Material _____ T.S. _____

	Location (Top, bottom, ends)	Thickness	Crown Radius	Knuckle Radius	Elliptical Ratio	Conical Apex Angle	Hemispherical Radius	Flat Diameter	Side to Press. (Conv. or Conc.)
(a)									
(b)									

If removable, bolts used _____ (Material, Spec. No., T.S., Size, Number) Other fastening _____ (Describe or attach sketch)

7. Jacket Closure: _____ (Describe as ogee end weld, bar, etc. If bar give dimensions, if bolted, describe or sketch)

8. Design pressure[2] 1250 psi at 575 °F Drop Weight _____ Charpy Impact _____ ft-lb at temp. of _____ °F

Items 9 and 10 to be completed for tube sections

9. Tube Sheets: Stationary. Material _____ (Kind & Spec. No.) Dia. _____ (Subject to pressure) Thickness ____ in. Attachment _____ (Welded, Bolted)

Floating. Material _____ Dia. _____ Thickness ____ in. Attachment _____

10. Tubes: Material _____ O.D. ____ in. Thickness _____ inches or gage. Number _____ Type _____ (Str. or U)

Items 11–14 incl. to be completed for inner chambers of jacketed vessels, or channels of heat exchangers.

11. Shell: Material _____ (Kind & Spec. No.) T.S. _____ (Min. of Range Specified) Nominal Thickness ____ in. Corrosion Allowance ____ in. Dia. ____ ft. ____ in. Length ____ ft. ____ in.

12. Seams: Long _____ H.T.[1] _____ R.T. _____ Efficiency _____ %

Girth _____ H.T.[1] _____ R.T. _____ No. of Courses _____

13. Heads (a) Material _____ T.S. _____ (b) Material _____ T.S. _____

	Location	Thickness	Crown Radius	Knuckle Radius	Elliptical Ratio	Conical Apex Angle	Hemispherical Radius	Flat Diameter	Side to Press. (Conv. or Conc.)
(a)	Top, bottom, ends								
(b)	Channel								

If removable, bolts used (a) _____ (b) _____ (c) _____ Other fastening _____ (Describe or attach sketch)

14. Design pressure[2] _____ psi at _____ °F Drop Weight _____ Charpy Impact _____ ft-lb at temp. of _____ °F

Items below to be completed for all vessels where applicable.

15. Safety Valve Outlets: Number _____ Size _____ Location _____

16. Nozzles:

Purpose (Inlet, Outlet, Drain)	Number	Dia. or Size	Type	Material	Thickness	Reinforcement Material	How Attached

17. Inspection Openings: Manholes, No. _____ Size _____ Location _____
Handholes, No. _____ Size _____ Location _____
Threaded, No. _____ Size _____ Location _____

18. Supports: Skirt _____ (Yes or No) Lugs _____ (Number) Legs _____ (Number) Other _____ (Describe) Attached _____ (Where & How)

[1] If Postweld Heat-Treated.
[2] [illegible]

1313-037
SHT. 44 of 46

Sheet 2 of 2

FORM N-2 NPT CERTIFICATE HOLDERS' DATA REPORT FOR NUCLEAR PART AND APPURTENANCES*

As required by the Provision of the ASME Code Rules, Section III, Div. 1

17240

1. (a) Manufactured by General Electric Company, Castle Hayne Rd., Wilmington, N.C.
(Name and address of NPT Certificate Holder)

(b) Manufactured for General Electric Company, San Jose, California (NEBG)
(Name and address of N Certificate Holder for completed nuclear component)

2. Identification-Certificate Holder's Serial No. of Part A5568 Nat'l Bd. No. _____

(a) Constructed According to Drawing No. 768E534G001 Drawing Prepared by D. L. Peterson

(b) Description of Part Inspected Control Rod Drive, Model #7RDB144DG001

(c) Applicable ASME Code: Section III, Edition 1974, Addenda date W'75, Case No. N207 1361-2 Class 1

1. Cap 166B9274P1
(167A2343)
SA182 - F316
3/8 thick x 1 1/16 OD

2. Indicator Pipe 166B9313P1
SA312-TP316
3/4 sch 40-seamless pipe
0.113 wall thickness
1.065 max. dia.

3. Plug 159A1176P1
SA182-F304
1/4 thick x 0.812 OD

4. Flange 919D610P1 (719E474)
SA182-F304
3.37 thick x 9 5/8 OD
neck 1 1/16 thick x 5.0 OD
2.875 ID

5. Base 137C5311P1
XM-19 ASME SA479
3.0 OD x .884 ID

6. Ring Flange 114B5122P2
SA182-F304
1" thick x 5.0 OD x 1.75 ID

7. Cap Screw 117C4516P2
SA193-B6
6 ea. 1/2 dia. on 4 1/8 bolt circle

8. Plug 175A7961P1
SA182-F304
0.38 thick x 1.307 dia.

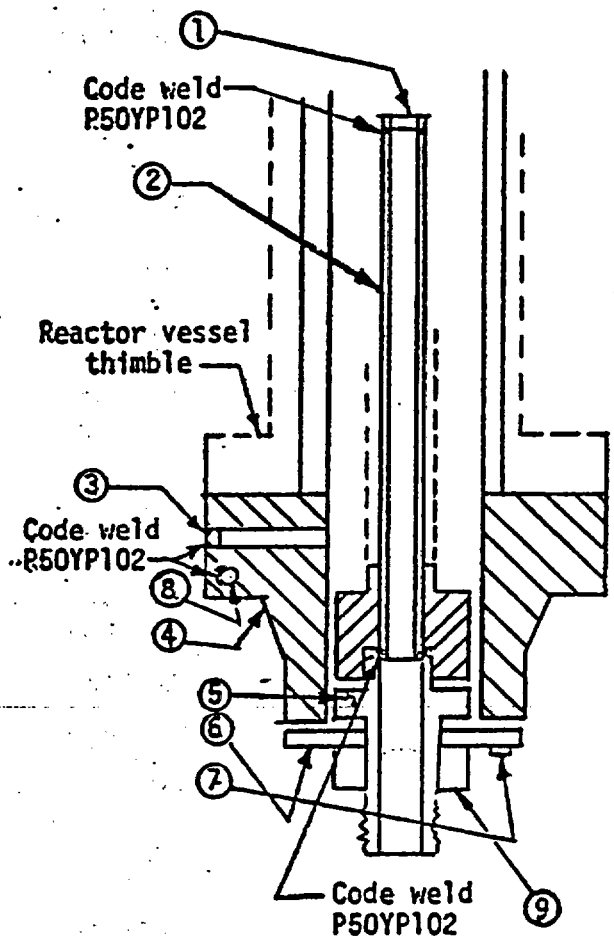

CONTROL ROD DRIVE
DWG - 768E534

9. Nut 137C5934P1
XM-19 SA479
1.30 thick x 2.62 dia.

00639

1B13-037
SET 45 of 46

REEL 12017/1359

SHEET 1 OF 2

FORM N-2 NPT CERTIFICATE HOLDERS' DATA REPORT FOR NUCLEAR PART AND APPURTENANCES*

*As required by the Provision of the ASME Code Rules, Section III, Div. 1

MR 25195

1. (a) Manufactured by General Electric Company, Castle Hayne Rd., Wilmington, N.C.
(Name and address of NPT Certificate Holder)

(b) Manufactured for General Electric Company, San Jose, California (NEBG)
(Name and address of N Certificate Holder for completed nuclear component)

2. Identification-Certificate Holder's Serial No. of Part A4740 Nat'l Bd. No.

(a) Constructed According to Drawing No. 768E534G001 Drawing Prepared by D. L. Peterson

(b) Description of Part Inspected Control Rod Drive, Model #7EDB144DG001

(c) Applicable ASME Code: Section III, Edition 1974, Addenda date W'75, Case No. N207/1361-2 Class 1

3. Remarks Standard part for use with Reactor. Hydrostatically tested at 1820 psi.
(Brief description of service for which component was designed)

* Total number of sheets - 2

We certify that the statements made in this report are correct and this vessel part or appurtenance as defined in the Code co forms to the rules of construction of the ASME Code Section III.
(The applicable Design Specification and Stress Report are not the responsibility of the NPT Certificate Holder for parts. An NPT Cert icate Holder for appurtenances is responsible for furnishing a separate Design Specification and Stress Report if the appurtenance is included in the component Design Specification and Stress Report.)

Date 4/30 19 83 Signed GE, NEPO-WMD By J. E. Stoudenmire
(NPT Certificate Holder)

Certificate of Authorization Expires June 16, 1984 Certificate of Authorization No. NPT N-1151

CERTIFICATION OF DESIGN FOR APPURTENANCE (when applicable)

Design information on file at GENERAL ELECTRIC CO., SAN JOSE, CALIFORNIA
22A5556, Rev. 2

Stress analysis report on file at GENERAL ELECTRIC CO., SAN JOSE, CALIFORNIA
22A4912, Rev. 2

Design specifications certified by B. N. Sridhar Prof. Eng. State Calif Reg. No. 18345

Stress analysis report certified by B. N. Sridhar Prof. Eng. State Calif Reg. No. 18345

CERTIFICATE OF SHOP INSPECTION

I, the undersigned, holding a valid commission issued by the National Board of Boiler and Pressure Vessel Inspectors and/or the State or Province of North Carolina and employed by Department of Labor of State of North Carolina have inspected the part of a pressure vessel described in this Partial Data Report on 4/30 19 83 and state that to the best of my knowledge and belief, the NPT Certificate Holder has constructed this part in accordance with the ASME Code Section III.

By signing this certificate, neither the inspector nor his employer makes any warranty, expressed or implied, concerning the part described in this Partial Data Report. Furthermore, neither the inspector nor his employer shall be liable in any manner for any personal injury or property damage or a loss of any kind arising from or connected with this inspection.

Date 4/30 19 83

E. B. Merrill
Inspector's Signature

Commissions N.C. 723, PA.WC1766, OHIO
National Board, State, Province and No.

RAF 6-5-6

*Supplemental sheets in form of lists, sketches or drawings may be used provided (1) size is 8½" x 11", (2) information in Items 1-3 on this Data Report is included on each sheet, and (3) each sheet is numbered and number of sheets is recorded in Item 3, "Remarks".

(10/77) This form (E00040) may be obtained from the Order Dept., ASME, 345 E. 47th St., New York, N.Y. 10

FORM N-2 (back)

Items 4–8 incl. to be completed for single wall vessels, jackets of jacketed vessels, or shells of heat exchangers.

4. Shell: Material _____ (Kind & Spec. No.) T.S. _____ (Min. of Range Specified) Nominal Thickness ____ in. Corrosion Allowance ____ in. Dia. ____ ft. ____ in. Length ____ ft. ____ in.

5. Seams: Long _____ H.T.[1] _____ R.T. _____ Efficiency _____ %

Girth _____ H.T.[1] _____ R.T. _____ No. of Courses _____

6. Heads: (a) Material _____ T.S. _____ (b) Material _____ T.S. _____

Location (Top, bottom, ends)	Thickness	Crown Radius	Knuckle Radius	Elliptical Ratio	Conical Apex Angle	Hemispherical Radius	Flat Diameter	Side to Press. (Conv. or Conc.)
(a)								
(b)								

If removable, bolts used _____ (Material, Spec. No., T.S., Size, Number) Other fastening _____ (Describe or attach sketch)

7. Jacket Closure: _____ (Describe as edge and weld, bar, etc. If bar give dimensions, if bolted, describe or sketch)

8. Design pressure[2] 1250 psi at 575 °F

Drop Weight _____
Charpy Impact _____ ft-lb
at temp. of _____ °F

Items 9 and 10 to be completed for tube sections.

9. Tube Sheets: Stationary. Material _____ (Kind & Spec. No.) Dia. _____ (Subject to pressure) Thickness ____ in. Attachment _____ (Welded, Bolted)

Floating. Material _____ Dia. _____ Thickness ____ in. Attachment _____

10. Tubes: Material _____ O.D. ____ in. Thickness _____ inches or gage. Number _____ Type _____ (Str. or U)

Items 11–14 incl. to be completed for inner chambers of jacketed vessels, or channels of heat exchangers.

11. Shell: Material _____ (Kind & Spec. No.) T.S. _____ (Min. of Range Specified) Nominal Thickness ____ in. Corrosion Allowance ____ in. Dia. ____ ft. ____ in. Length ____ ft. ____ in.

12. Seams: Long _____ H.T.[1] _____ R.T. _____ Efficiency _____ %

Girth _____ H.T.[1] _____ R.T. _____ No. of Courses _____

13. Heads: (a) Material _____ T.S. _____ (b) Material _____ T.S. _____

Location	Thickness	Crown Radius	Knuckle Radius	Elliptical Ratio	Conical Apex Angle	Hemispherical Radius	Flat Diameter	Side to Press. (Conv. or Conc.)
(a) Top, bottom, ends								
(b) Channel								

If removable, bolts used (a) _____ (b) _____ (c) _____ Other fastening _____ (Describe or attach sketch)

14. Design pressure[2] _____ psi at _____ °F

Drop Weight _____
Charpy Impact _____ ft-lb
at temp. of _____ °F

Items below to be completed for all vessels where applicable.

15. Safety Valve Outlets: Number _____ Size _____ Location _____

16. Nozzles:

Purpose (Inlet, Outlet, Drain)	Number	Dia. or Size	Type	Material	Thickness	Reinforcement Material	How Attached

17. Inspection Openings: Manholes, No. _____ Size _____ Location _____
Handholes, No. _____ Size _____ Location _____
Threaded, No. _____ Size _____ Location _____

18. Supports: Skirt _____ (Yes or No) Lugs _____ (Number) Legs _____ (Number) Other _____ (Describe) Attached _____ (Where & How)

1813-37
SHT 46 of 46

Sheet 2 of 2

FORM N-2 NPT CERTIFICATE HOLDERS' DATA REPORT FOR NUCLEAR PART AND APPURTENANCES*
As required by the Provision of the ASME Code Rules, Section III, Div. 1

MR28195

1. (a) Manufactured by General Electric Company, Castle Hayne Rd., Wilmington, N.C.
(Name and address of NPT Certificate Holder)

(b) Manufactured for General Electric Company, San Jose, California (NEBG)
(Name and address of N Certificate Holder for completed nuclear component)

2. Identification-Certificate Holder's Serial No. of Part A4740 Nat'l Bd. No.

(a) Constructed According to Drawing No. 768E534G001 Drawing Prepared by D. L. Peterson

(b) Description of Part Inspected Control Rod Drive, Model #7RDB144DG001

(c) Applicable ASME Code: Section III, Edition 1974, Addenda date W'75, Case No. N207 1361-2 Class 1

1. Cap 166B9274P1
(167A2343)
SA182 - F316
3/8 thick x 1 1/16 OD

2. Indicator Pipe 166B9313P1
SA312-TP316
3/4 sch 40-seamless pipe
0.113 wall thickness
1.065 max. dia.

3. Plug 159A1176P1
SA182-F304
1/4 thick x 0.812 OD

4. Flange 919D610P1 (719E474)
SA182-F304
3.37 thick x 9 5/8 OD
neck 1 1/16 thick x 5.0 OD
2.875 ID

5. Base 137C5311P1
XM-19 ASME SA479
3.0 OD x .884 ID

6. Ring Flange 11485122P2
SA182-F304
1" thick x 5.0 OD x 1.75 ID

7. Cap Screw 117C4516P2
SA193-B6
6 ea. 1/2 dia. on 4 1/8 bolt circle

8. Plug 175A7961P1
SA182-F304
0.38 thick x 1.307 dia.

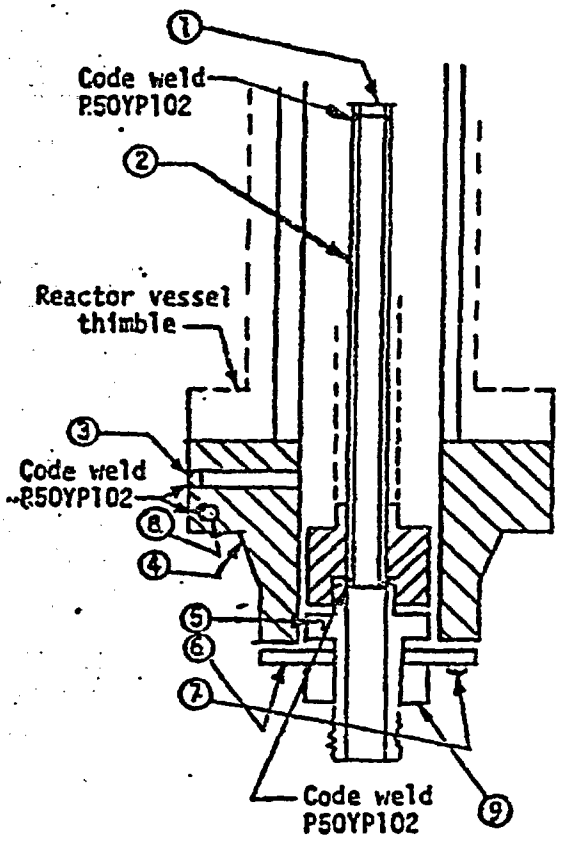

CONTROL ROD DRIVE
DWG - 768E534

9. Nut 137C5934P1
XM-19 SA479
1.30 thick x 2.62 dia.

1B13-038

NIS-2/NR-1 OWNER'S REPORT FOR REPAIRS OR REPLACEMENTS

As required by the Provisions of the ASME Code Section XI

PNPP No. 9308 Rev. 9/11/00 NQI-1741

1. Owner: FIRSTENERGY CORP.
10 Center Road, Perry, Ohio 44081

Date 05/29//03
Sheet 1 of 1

2. Plant: Perry Nuclear Power Plant (PNPP)
10 Center Road, Perry, Ohio 44081

Unit 1
WO 03-004391-000, R-0
(Repair Org. P.O. No., etc.)
ORDER# 20000 89 E6

3. Work Performed By: FIRSTENERGY Nuclear Operating Company PNPP
10 Center Road, Perry, Ohio 44081

Type Code Symbol Stamp NR
Authorization No. 33
Expiration Date 9-26-05

4. Identification of System: 1B13 Reactor and Internals

5. (a) Applicable Construction Code: ASME Sec III, Subsection NB ,1974 Edition
NAME/SECTION/DIVISION/CLASS

Winter 19 75 Addenda Code Case(s) N207, 1361-2, 1728, 1644-4, N272

(b) Construction Code used for repairs, modifications, or replacements: 1974 (Edition) W75 (Addenda) N/A (Code Case(s))

(c) ASME Code Section XI applicable for Inservice Inspection: 1989 (Edition) N/A (Addenda) N/A (Code Case(s))

(d) Applicable Edition of Section XI Utilized for Repairs, Modification, or Replacements:
19 89 , N/A 19 N/A Addenda N/A (Code Case(s))

(e) Design Responsibilities FIRSTENERGY Nuclear Operating Company

6. Identification of Components Repaired, Modified, or Replacement Components

Name of Component	Name of Manufacturer	Manufacturer Serial No.	Nat. Board No.	Other ID.	Year Built	Repair, Replacement, or Modification	ASME Code Stamped
Piping System	General Electric	1B13	64077	1B13-D0008	1984	Replacement	Yes

7. Description of Work: Replaced 8 (each) Capscrews, Heat Number 13630 during re-installation of CRDM S/N A4531 at core location 22-35.

8. Test Conducted: Hydrostatic- ☐ Pneumatic- ☐ Nominal Operating Pressure- ☒ Other- ☐
Pressure 1034 psi Test Temperature 135 degrees F Code Case(s) N/A

NIS-2/NR-1 OWNER'S REPORT FOR REPAIRS OR REPLACEMENTS (Back)

PNPP No. 9308 Rev. 9/11/00 NQI-1741

9. Remarks:

NO NAMEPLATE/STAMPING PERFORMED DUE TO THE INTERFACE CONTROLS OF RA-2370 BEING IN EFFECT AND JURISDICTIONAL AUTHORITY CONCURRENCE HAVING BEEN RECEIVED.

Note: Attach all applicable Manufacturer's Data Reports. Supplemental sheets such as lists, sketches, or drawings may be used, provided (1) size is 8 1/2 in. x 11 in., (2) information in items 1 through 6 of this report is included on each sheet, and (3) each sheet is numbered and the number of sheets is recorded on the front of this form.

CERTIFICATE OF COMPLIANCE

I, Lester J. Erbacher, certify that to the best of my knowledge and belief the statements made in this report are correct and the repair, modification or replacement of the items described above conforms to Section XI of the ASME Code and to the National Board Inspection Code "NR" rules.

National Board Certificate of Authorization No. 33 to use the "NR stamp expires 9-26, 20 05

Date May 29, 20 03 Signed FENOC-PNPP (name of repair organization) (authorized representative) QE (title)

CERTIFICATE OF INSPECTION/INSERVICE INSPECTION

I, Thomas G. Laps, holding a valid commission issued by The National Board of Boiler and Pressure Vessel Inspectors and certificate of competency issued by the jurisdiction of OHIO and employed by Hartford Steam Boiler Ct. of Hartford, Conn. have inspected the repair, modification or replacement described in this report on JUNE 6, 2003 and state that to the best of my knowledge and belief, this repair, modification or replacement has been completed in accordance with Section XI of the ASME Code and the National Board Inspection Code "NR" rules.

By signing this certificate, neither the undersigned nor my employer makes any warranty, expressed or implied, concerning the work described in this report. Furthermore, neither the undersigned nor my employer shall be liable in any manner for any personal injury, property damage or loss of any kind arising from or connected with this inspection.

Date JUNE 6, 2003 Signed Thomas G. Laps (inspector) Commissions NB 9330 "N" "I" "A" Ohio Comm. (National Board (include endorsements), and jurisdiction, and no.)

1B13-039

NIS-2/NR-1 OWNER'S REPORT FOR REPAIRS OR REPLACEMENTS

As required by the Provisions of the ASME Code Section XI

PNPP No. 9308 Rev. 9/11/00 NQI-1741

1. Owner: FIRSTENERGY CORP. 10 Center Road, Perry, Ohio 44081 — Date 06/03/03 — Sheet 1 of 7

2. Plant: Perry Nuclear Power Plant (PNPP) 10 Center Road, Perry, Ohio 44081 — Unit 1 — See Descrip. of Work (Repair Org. P.O. No., etc.)

3. Work Performed By: FIRSTENERGY Nuclear Operating Company PNPP 10 Center Road, Perry, Ohio 44081 — Type Code Symbol Stamp NR — Authorization No. 33 — Expiration Date 9-26-05

4. Identification of System: 1B13 Reactor and Internals

5. (a) Applicable Construction Code: ASME Sec III, Subsection NB (NAME/SECTION/DIVISION/CLASS), 1974 Edition

Winter 19 75 Addenda Code Case(s) N207, 1361-2, 1728, 1644-4, N272

(b) Construction Code used for repairs, modifications, or replacements: 1974 (Edition) W75 (Addenda) N/A (Code Case(s))

(c) ASME Code Section XI applicable for Inservice Inspection: 1989 (Edition) N/A (Addenda) N/A (Code Case(s))

(d) Applicable Edition of Section XI Utilized for Repairs, Modification, or Replacements:

19 89, N/A 19 N/A Addenda N/A (Code Case(s))

(e) Design Responsibilities FIRSTENERGY Nuclear Operating Company

6. Identification of Components Repaired, Modified, or Replacement Components

Name of Component	Name of Manufacturer	Manufacturer Serial No.	Nat. Board No.	Other ID.	Year Built	Repair, Replacement, or Modification	ASME Code Stamped
Piping System	General Electric	1B13	64077	1B13-D0008	1984	Replacement	Yes

7. Description of Work: Replaced 3 each CRDMs. Replaced S/N A5649 at Core location 10-27 with S/N A5691 using 8 Ea. Capscrew Ht# 13485 per WO 01-016643-000 R-00. Replaced S/N A5684 at Core Location 22-11 with S/N A4657 using 8 Ea. capscrew HT# 13433 per WO 01-16700, R-00 and replaced S/N A3620 at Core location 34-31 with S/N A4611 using 8 Ea. Capscrew HT# 13628 per WO 01-16707, R-00. SAP ORDER NUMBERS 6/2/03 20001263 4, 20000 9833 & 20000 9891, & 20001008

8. Test Conducted: Hydrostatic- ☐ Pneumatic- ☐ Nominal Operating Pressure- ☒ Other- ☐

Pressure 1034 psi Test Temperature 135 degrees F Code Case(s) N/A

NIS-2/NR-1 OWNER'S REPORT FOR REPAIRS OR REPLACEMENTS (Back)

PNPP No. 9308 Rev. 9/11/00 NQI-1741

9. Remarks: _____

NO NAMEPLATE/STAMPING PERFORMED DUE TO THE INTERFACE CONTROLS OF RA-2370 BEING IN EFFECT AND JURISDICTIONAL AUTHORITY CONCURRENCE HAVING BEEN RECEIVED.

Note: Attach all applicable Manufacturer's Data Reports. Supplemental sheets such as lists, sketches, or drawings may be used, provided (1) size is 8 1/2 in. x 11 in., (2) information in items 1 through 6 of this report is included on each sheet, and (3) each sheet is numbered and the number of sheets is recorded on the front of this form.

CERTIFICATE OF COMPLIANCE

I, Lester J. Erbacher, certify that to the best of my knowledge and belief the statements made in this report are correct and the repair, modification or replacement of the items described above conforms to Section XI of the ASME Code and to the National Board Inspection Code "NR" rules.

National Board Certificate of Authorization No. 33 to use the "NR stamp expires 9-26, 20 05

Date June 3, 20 03 Signed FENOC-PNPP (name of repair organization) (authorized representative) QE (title)

CERTIFICATE OF INSPECTION/INSERVICE INSPECTION

I, Thomas G. Laps, holding a valid commission issued by The National Board of Boiler and Pressure Vessel Inspectors and certificate of competency issued by the jurisdiction of OHIO and employed by Hartford Steam Boiler Ct. of Hartford, Conn. have inspected the repair, modification or replacement described in this report on June 11, 20 03 and state that to the best of my knowledge and belief, this repair, modification or replacement has been completed in accordance with Section XI of the ASME Code and the National Board Inspection Code "NR" rules.

By signing this certificate, neither the undersigned nor my employer makes any warranty, expressed or implied, concerning the work described in this report. Furthermore, neither the undersigned nor my employer shall be liable in any manner for any personal injury, property damage or loss of any kind arising from or connected with this inspection.

Date June 11, 20 03 Signed Thomas G. Laps (inspector) Commissions NB 9330 "N" "I" "A" Ohio Comm. (National Board (include endorsements), and jurisdiction, and no.)

16971

FORM N-2 NPT CERTIFICATE HOLDERS' DATA REPORT FOR NUCLEAR PART AND APPURTENANCES*

As required by the Provision of the ASME Code Rules. Section III. Div. 1

1813-039
SHT. 2067

1. (a) Manufactured by General Electric Company, Castle Hayne Rd., Wilmington, N.C.
(Name and address of NPT Certificate Holder)

(b) Manufactured for General Electric Company, San Jose, California (NEBG)
(Name and address of N Certificate Holder for completed nuclear component)

2. Identification-Certificate Holder's Serial No. of Part A5691 Nat'l Bd. No.

(a) Constructed According to Drawing No. 768E534G001 Drawing Prepared by D. L. Paterson

(b) Description of Part Inspected Control Rod Drive, Model #7RDB144DG001

(c) Applicable ASME Code: Section III, Edition 1974, Addenda date W'75, Case No. N207 1361-2 Class 1

3. Remarks: Standard part for use with Reactor. Hydrostatically tested at 1820 psi.
(Brief description of service for which component was designed)

* Total number of sheets - 2

We certify that the statements made in this report are correct and this vessel part or appurtenance as defined in the Code conforms to the rules of construction of the ASME Code Section III.
(The applicable Design Specification and Stress Report are not the responsibility of the NPT Certificate Holder for parts. An NPT Certificate Holder for appurtenances is responsible for furnishing a separate Design Specification and Stress Report if the appurtenance is not included in the component Design Specification and Stress Report.)

Date 7/24 19 81 Signed GE, NEPD-WMD-QA (NPT Certificate Holder) By J. Stordemann

Certificate of Authorization Expires September 15, 1981 Certificate of Authorization No. NPT N-1151

CERTIFICATION OF DESIGN FOR APPURTENANCE (when applicable)

Design information on file at GE, NEPD-WMD-QA, Castle Hayne Rd., Wilmington, N.C.
22A5556, Rev. 2

Stress analysis report on file at GE, NEPD-WMD-QA, Castle Hayne Rd., Wilmington, N.C.
22A4912, Rev. 2

Design specifications certified by B. N. Sridhar Prof. Eng. State Calif Reg. No. 18345

Stress analysis report certified by B. N. Sridhar Prof. Eng. State Calif Reg. No. 18345

CERTIFICATE OF SHOP INSPECTION

I, the undersigned, holding a valid commission issued by the National Board of Boiler and Pressure Vessel Inspectors and/or the State or Province of North Carolina and employed by Department of Labor of State of North Carolina have inspected the part of a pressure vessel described in this Partial Data Report on 7/24 19 81, and state that to the best of my knowledge and belief, the NPT Certificate Holder has constructed this part in accordance with the ASME Code Section III.

By signing this certificate, neither the inspector nor his employer makes any warranty, expressed or implied, concerning the part described in this Partial Data Report. Furthermore, neither the inspector nor his employer shall be liable in any manner for any personal injury or property damage or a loss of any kind arising from or connected with this inspection.

Date 7/24 19 81

E. R. Shenill
Inspector's Signature

Commissions N.C. 723, PA WC1766, OHIO
National Board, State, Province and No.

Supplemental sheets in form of lists, sketches or drawings may be used provided (1) size is 8½" x 11", (2) information in items 1-3 on this data report is included on each sheet, and (3) each sheet is numbered and number of sheets is recorded in item 3, "Remarks"

00639

This form (E000,40) may be obtained from the Order Dept., ASME, 345 E. 47th St., New York, N.Y. 10017

FORM N-2 (back)

Items 4–8 incl. to be completed for single wall vessels, jackets of jacketed vessels, or shells of heat exchangers.

4. Shell: Material ____ ____ T.S. ____ Nominal Thickness ____ in. Corrosion Allowance ____ in. Dia. ____ ft. ____ in. Length ____ ft. ____ in.
(Kind & Spec. No.) (Min. of Range Specified)

5. Seams: Long ____ H.T.[1] ____ R.T. ____ Efficiency ____ %

Girth ____ H.T.[1] ____ R.T. ____ No. of Courses ____

6. Heads: (a) Material ____ T.S. ____ (b) Material ____ T.S. ____

Location (Top, bottom, ends)	Thickness	Crown Radius	Knuckle Radius	Elliptical Ratio	Conical Apex Angle	Hemispherical Radius	Flat Diameter	Side to Press. (Conv. or Conc.)
(a)								
(b)								

If removable, bolts used ____ (Material, Spec. No., T.S., Size, Number) Other fastening ____ (Describe or attach sketch)

7. Jacket Closure: ____
(Describe as edge and weld, bar, etc. If bar give dimensions, if bolted, describe or sketch)

8. Design pressure[2] 1250 psi at 575 °F Drop Weight ____ Charpy Impact ____ ft-lb at temp. of ____ °F

Items 9 and 10 to be completed for tube sections

9. Tube Sheets: Stationary. Material ____ (Kind & Spec. No.) Dia. ____ (Subject to pressure) Thickness ____ in. Attachment ____ (Welded, Bolted)

Floating. Material ____ Dia. ____ Thickness ____ in. Attachment ____

10. Tubes: Material ____ O.D. ____ in. Thickness ____ inches or gage. Number ____ Type ____ (Str. or U)

Items 11–14 incl. to be completed for inner chambers of jacketed vessels, or channels of heat exchangers.

11. Shell: Material ____ T.S. ____ Nominal Thickness ____ in. Corrosion Allowance ____ in. Dia. ____ ft. ____ in. Length ____ ft. ____ in.
(Kind & Spec. No.) (Min. of Range Specified)

12. Seams: Long ____ H.T.[1] ____ R.T. ____ Efficiency ____ %

Girth ____ H.T.[1] ____ R.T. ____ No. of Courses ____

13. Heads (a) Material ____ T.S. ____ (b) Material ____ T.S. ____

Location	Thickness	Crown Radius	Knuckle Radius	Elliptical Ratio	Conical Apex Angle	Hemispherical Radius	Flat Diameter	Side to Press. (Conv. or Conc.)
(a) Top, bottom, ends								
(b) Channel								

If removable, bolts used (a) ____ (b) ____ (c) ____ Other fastening ____ (Describe or attach sketch)

14. Design pressure[2] ____ psi at ____ °F Drop Weight ____ Charpy Impact ____ ft-lb at temp. of ____ °F

Items below to be completed for all vessels where applicable.

15. Safety Valve Outlets: Number ____ Size ____ Location ____

16. Nozzles:

Purpose (Inlet, Outlet, Drain)	Number	Dia. or Size	Type	Material	Thickness	Reinforcement Material	How Attached

17. Inspection Openings: Manholes, No. ____ Size ____ Location ____
Handholes, No. ____ Size ____ Location ____
Threaded, No. ____ Size ____ Location ____

18. Supports: Skirt ____ (Yes or No) Lugs ____ (Number) Legs ____ (Number) Other ____ (Describe) Attached ____ (Where & How)

[1] If Postweld Heat-Treated.
[2] List other internal or external pressure with corresponding temperature when applicable.

FORM N-2 NPT CERTIFICATE HOLDERS' DATA REPORT FOR NUCLEAR PART AND APPURTENANCES*
As required by the Provision of the ASME Code Rules, Section III, Div. 1

1B13-039
SHT 3 of 7

1. (a) Manufactured by General Electric Company, Castle Hayne Rd., Wilmington, N.C.
(Name and address of NPT Certificate Holder)

(b) Manufactured for General Electric Company, San Jose, California (NEBG)
(Name and address of N Certificate Holder for completed nuclear component)

2. Identification-Certificate Holder's Serial No. of Part A5691 Nat'l Bd. No. _____

(a) Constructed According to Drawing No. 768E534G001 Drawing Prepared by D. L. Peterson

(b) Description of Part Inspected Control Rod Drive, Model #7RDB144DG001

(c) Applicable ASME Code: Section III, Edition 1974, Addenda date W'75, Case No. N207 1361-2 Class 1

1. Cap 166B9274P1
(167A2343)
SA182 - F316
3/8 thick x 1 1/16 OD

2. Indicator Pipe 166B9313P1
SA312-TP316
3/4 sch 40-seamless pipe
0.113 wall thickness
1.065 max. dia.

3. Plug 159A1176P1
SA182-F304
1/4 thick x 0.812 OD

4. Flange 919D610P1 (719E474)
SA182-F304
3.37 thick x 9 5/8 OD
neck 1 1/16 thick x 5.0 OD
2.875 ID

5. Base 137C5311P1
XM-19 ASME SA479
3.0 OD x .884 ID

6. Ring Flange 114B5122P2
SA182-F304
1" thick x 5.0 OD x 1.75 ID

7. Cap Screw 117C4516P2
SA193-B6
6 ea. 1/2 dia. on 4 1/8 bolt circle

8. Plug 175A7961P1
SA182-F304
0.38 thick x 1.307 dia.

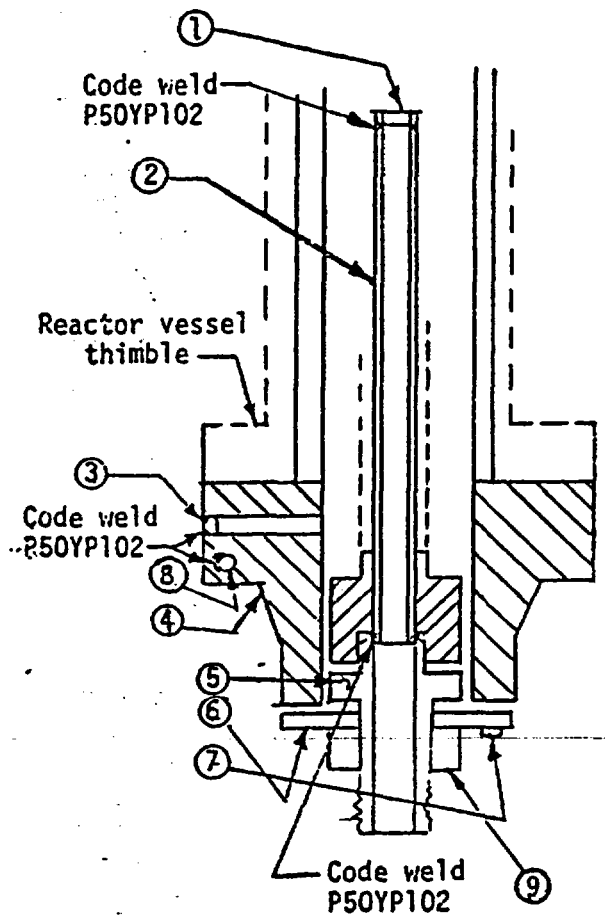

CONTROL ROD DRIVE
DWG - 768E534

9. Nut 137C5934P1
XM-19 SA479
1.30 thick x 2.62 dia.

00640

REPORT NO. P0059-009

Sheet 1 of 2 16977

FORM N-2 NPT CERTIFICATE HOLDERS' DATA REPORT FOR NUCLEAR PART AND APPURTENANCES*
As required by the Provision of the ASME Code Rules, Section III, Div. 1 {1B13-039 SHT. 4 of 7}

1. (a) Manufactured by General Electric Company, Castle Hayne Rd., Wilmington, N.C.
(Name and address of NPT Certificate Holder)

(b) Manufactured for General Electric Company, San Jose, California (NEBG)
(Name and address of N Certificate Holder for completed nuclear component)

2. Identification-Certificate Holder's Serial No. of Part A4657 Nat'l Bd. No.

(a) Constructed According to Drawing No. 768E534G001 Drawing Prepared by D. L. Peterson

(b) Description of Part Inspected Control Rod Drive, Model #7RDB144DG001

(c) Applicable ASME Code: Section III, Edition 1974, Addenda date W'75, Case No. N207 1361-2 Class 1

3. Remarks: Standard part for use with Reactor. Hydrostatically tested at 1820 psi.
(Brief description of service for which component was designed)

* Total number of sheets - 2

We certify that the statements made in this report are correct and this vessel part or appurtenance as defined in the Code conforms to the rules of construction of the ASME Code Section III.
(The applicable Design Specification and Stress Report are not the responsibility of the NPT Certificate Holder for parts. An NPT Certificate Holder for appurtenances is responsible for furnishing a separate Design Specification and Stress Report if the appurtenance is not included in the component Design Specification and Stress Report.)

Date 7/24 19 81 Signed GE, NEPD-WMD-QA (NPT Certificate Holder) By J. Stoudenmire

Certificate of Authorization Expires September 15, 1981 Certificate of Authorization No. NPT N-1151

CERTIFICATION OF DESIGN FOR APPURTENANCE (when applicable)

Design information on file at GE, NEPD-WMD-QA, Castle Hayne Rd., Wilmington, N.C.
22A5556, Rev. 2

Stress analysis report on file at GE, NEPD-WMD-QA, Castle Hayne Rd., Wilmington, N.C.
22A4912, Rev. 2

Design specifications certified by B. N. Sridhar Prof. Eng. State Calif Reg. No. 18345

Stress analysis report certified by B. N. Sridhar Prof. Eng. State Calif Reg. No. 18345

CERTIFICATE OF SHOP INSPECTION

I, the undersigned, holding a valid commission issued by the National Board of Boiler and Pressure Vessel Inspectors and/or the State or Province of North Carolina and employed by Department of Labor of State of North Carolina have inspected the part of a pressure vessel described in this Partial Data Report on 7/24 1981, and state that to the best of my knowledge and belief, the NPT Certificate Holder has constructed this part in accordance with the ASME Code Section III.

By signing this certificate, neither the Inspector nor his employer makes any warranty, expressed or implied, concerning the part described in this Partial Data Report. Furthermore, neither the Inspector nor his employer shall be liable in any manner for any personal injury or property damage or a loss of any kind arising from or connected with this inspection.

Date 7/24 19 81

E. B. Sherrill
Inspector's Signature

Commissions N.C. 723, PA WC1766, OHIO
National Board, State, Province and No.

*Supplemental sheets in form of lists, sketches or drawings may be used provided (1) size is 8½" x 11", (2) information in items 1-2 on this Data Report is included on each sheet, and (3) each sheet is numbered and number of sheets is recorded in item 3, "Remarks"

00579

(10/77) This form (E00040) may be obtained from the Order Dept., ASME, 345 E. 47th St., New York, N.Y. 10017

FORM N-2 (back)

Items 4–8 incl. to be completed for single wall vessels, jackets of jacketed vessels, or shells of heat exchangers.

4. Shell: Material ____ (Kind & Spec. No.) ____ T.S. ____ (Min. of Range Specified) Nominal Thickness ____ in. Corrosion Allowance ____ in. Dia. ____ ft. ____ in. Length ____ ft. ____ in.

5. Seams: Long ____ H.T.[1] ____ R.T. ____ Efficiency ____ %

Girth ____ H.T.[1] ____ R.T. ____ No. of Courses ____

6. Heads: (a) Material ____ T.S. ____ (b) Material ____ T.S. ____

Location (Top, bottom, ends)	Thickness	Crown Radius	Knuckle Radius	Elliptical Ratio	Conical Apex Angle	Hemispherical Radius	Flat Diameter	Side to Press. (Conv. or Conc.)
(a)								
(b)								

If removable, bolts used ____ (Material, Spec. No., T.S., Size, Number) Other fastening ____ (Describe or attach sketch)

7. Jacket Closure: ____ (Describe as ogee and weld, bar, etc. If bar give dimensions, if bolted, describe or sketch)

8. Design pressure[2] 1250 psi at 575 °F Drop Weight ____ Charpy Impact ____ ft-lb at temp. of ____ °F

Items 9 and 10 to be completed for tube sections

9. Tube Sheets: Stationary. Material ____ (Kind & Spec. No.) Dia. ____ (Subject to pressure) Thickness ____ in. Attachment ____ (Welded, Bolted)

Floating. Material ____ Dia. ____ Thickness ____ in. Attachment ____

10. Tubes: Material ____ O.D. ____ in. Thickness ____ inches or gage. Number ____ Type ____ (Str. or U)

Items 11–14 incl. to be completed for inner chambers of jacketed vessels, or channels of heat exchangers.

11. Shell: Material ____ (Kind & Spec. No.) T.S. ____ (Min. of Range Specified) Nominal Thickness ____ in. Corrosion Allowance ____ in. Dia. ____ ft. ____ in. Length ____ ft. ____ in.

12. Seams: Long ____ H.T.[1] ____ R.T. ____ Efficiency ____ %

Girth ____ H.T.[1] ____ R.T. ____ No. of Courses ____

13. Heads (a) Material ____ T.S. ____ (b) Material ____ T.S. ____

Location	Thickness	Crown Radius	Knuckle Radius	Elliptical Ratio	Conical Apex Angle	Hemispherical Radius	Flat Diameter	Side to Press. (Conv. or Conc.)
(a) Top, bottom, ends								
(b) Channel								

If removable, bolts used (a) ____ (b) ____ (c) ____ Other fastening ____ (Describe or attach sketch)

14. Design pressure[2] ____ psi at ____ °F Drop Weight ____ Charpy Impact ____ ft-lb at temp. of ____ °F

Items below to be completed for all vessels where applicable.

15. Safety Valve Outlets: Number ____ Size ____ Location ____

16. Nozzles:

Purpose (Inlet, Outlet, Drain)	Number	Dia. or Size	Type	Material	Thickness	Reinforcement Material	How Attached

17. Inspection Openings: Manholes, No. ____ Size ____ Location ____
Handholes, No. ____ Size ____ Location ____
Threaded, No. ____ Size ____ Location ____

18. Supports: Skirt ____ (Yes or No) Lugs ____ (Number) Legs ____ (Number) Other ____ (Description) Attached ____ (Where & How)

[1] If Postweld Heat-Treated.
[2] List other internal or external pressure with concurrent temperature when applicable.

FORM N-2 NPT CERTIFICATE HOLDERS' DATA REPORT FOR NUCLEAR PART AND APPURTENANCES*

As required by the Provision of the ASME Code Rules, Section III, Div. 1

1B13-039
5 of 7

1. (a) Manufactured by General Electric Company, Castle Hayne Rd., Wilmington, N.C.
(Name and address of NPT Certificate Holder)

(b) Manufactured for General Electric Company, San Jose, California (NEBG)
(Name and address of N Certificate Holder for completed nuclear component)

2. Identification-Certificate Holder's Serial No. of Part A4657 Nat'l Bd. No. _____

(a) Constructed According to Drawing No. 768E534G001 Drawing Prepared by D. L. Peterson

(b) Description of Part Inspected Control Rod Drive, Model #7RDB144DG001

(c) Applicable ASME Code: Section III, Edition 1974, Addenda date W'75, Case No. N207 1361-2 Class 1

1. Cap 166B9274P1
(167A2343)
SA182 - F316
3/8 thick x 1 1/16 OD

2. Indicator Pipe 166B9313P1
SA312-TP316
3/4 sch 40-seamless pipe
0.113 wall thickness
1.065 max. dia.

3. Plug 159A1176P1
SA182-F304
1/4 thick x 0.812 OD

4. Flange 919D610P1 (719E474)
SA182-F304
3.37 thick x 9 5/8 OD
neck 1 1/16 thick x 5.0 OD
2.875 ID

5. Base 137C5311P1
XM-19 ASME SA479
3.0 OD x .884 ID

6. Ring Flange 114B5122P2
SA182-F304
1" thick x 5.0 OD x 1.75 ID

7. Cap Screw 117C4516P2
SA193-B6
6 ea. 1/2 dia. on 4 1/8 bolt circle

8. Plug 175A7961P1
SA182-F304
0.38 thick x 1.307 dia.

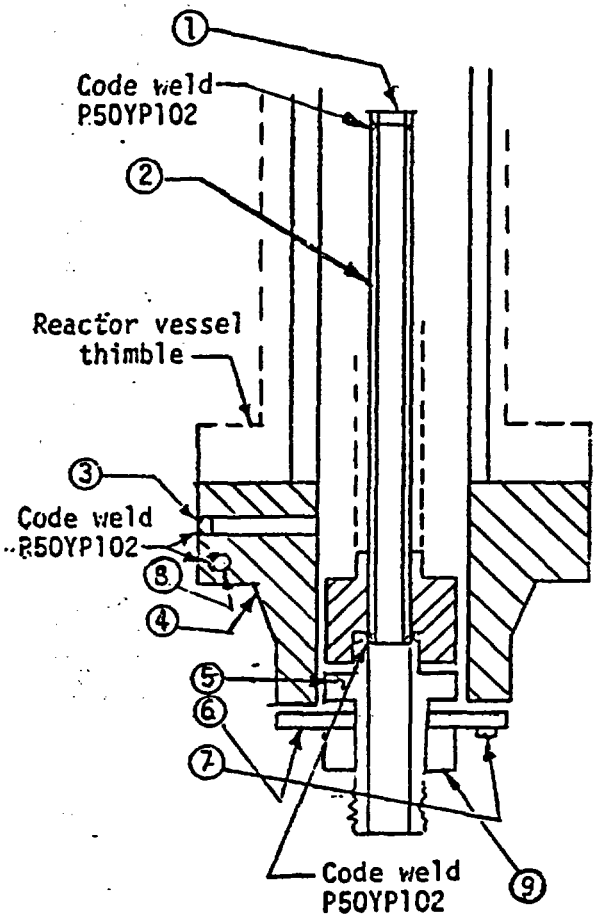

CONTROL ROD DRIVE
DWG - 768E534

9. Nut 137C5934P1
XM-19 SA479
1.30 thick x 2.62 dia.

00580

FORM N-2 NPT CERTIFICATE HOLDERS' DATA REPORT FOR NUCLEAR PART AND APPURTENANCES*

*As required by the Provision of the ASME Code Rules, Section III, Div. 1

{1B13-039 SH 6 of 7}

1. (a) Manufactured by General Electric Company, Castle Hayne Rd., Wilmington, N.C.
(Name and address of NPT Certificate Holder)

(b) Manufactured for General Electric Company, San Jose, California (NEBG)
(Name and address of N Certificate Holder for completed nuclear component)

2. Identification-Certificate Holder's Serial No. of Part A4611 Nat'l Bd. No.

(a) Constructed According to Drawing No. 768E534G001 Drawing Prepared by D. L. Peterson

(b) Description of Part Inspected Control Rod Drive, Model #7RDB144DG001

(c) Applicable ASME Code: Section III, Edition 1974, Addenda date W'75, Case No. N207 1361-2 Class 1

3. Remarks: Standard part for use with Reactor. Hydrostatically tested at 1820 psi.
(Brief description of service for which component was designed)

* Total number of sheets - 2

We certify that the statements made in this report are correct and this vessel part or appurtenance as defined in the Code conforms to the rules of construction of the ASME Code Section III.
(The applicable Design Specification and Stress Report are not the responsibility of the NPT Certificate Holder for parts. An NPT Certificate Holder for appurtenances is responsible for furnishing a separate Design Specification and Stress Report if the appurtenance is not included in the component Design Specification and Stress Report.)

Date 4/18 19 83 Signed GE, NEPD-WMD By J. E. Stroudemire
(NPT Certificate Holder)

Certificate of Authorization Expires June 16, 1984 Certificate of Authorization No. NPT N-1151

CERTIFICATION OF DESIGN FOR APPURTENANCE (when applicable)

Design information on file at GENERAL ELECTRIC CO., SAN JOSE, CALIFORNIA
22A5556, Rev. 2

Stress analysis report on file at GENERAL ELECTRIC CO., SAN JOSE, CALIFORNIA
22A4912, Rev. 2

Design specifications certified by B. N. Sridhar Prof. Eng. State Calif Reg. No. 18345

Stress analysis report certified by B. N. Sridhar Prof. Eng. State Calif Reg. No. 18345

CERTIFICATE OF SHOP INSPECTION

I, the undersigned, holding a valid commission issued by the National Board of Boiler and Pressure Vessel Inspectors and/or the State or Province of North Carolina and employed by Department of Labor of State of North Carolina have inspected the part of a pressure vessel described in this Partial Data Report on 4/18 19 83 and state that to the best of my knowledge and belief, the NPT Certificate Holder has constructed this part in accordance with the ASME Code Section III.

By signing this certificate, neither the Inspector nor his employer makes any warranty, expressed or implied, concerning the part described in this Partial Data Report. Furthermore, neither the Inspector nor his employer shall be liable in any manner for any personal injury or property damage or a loss of any kind arising from or connected with this inspection.

Date 4/18 19 83

E R Sherrill
Inspector's Signature

Commissions N.C. 723, PA WC1766, OHIO
National Board, State, Province and No.

0897

*Supplemental sheets in form of lists, sketches or drawings may be used provided (1) size is 8½" x 11", (2) information in items 1-3 on this Data Report is included on each sheet, and (3) each sheet is numbered and number of sheets is recorded in item 3, "Remarks".

(10/77) This form (E00040) may be obtained from the Order Dept., ASME, 345 E. 47th St., New York, N.Y. 10017

FORM N-2 (back)

Items 4–8 incl. to be completed for single wall vessels, jackets of jacketed vessels, or shells of heat exchangers.

4. Shell: Material _____ T.S. _____ Nominal Thickness ____ in. Corrosion Allowance ____ in. Dia. ____ ft. ____ in. Length ____ ft. ____ in
(Kind & Spec. No.) (Min. of Range Specified)

5. Seams: Long _____ H.T.[1] _____ R.T. _____ Efficiency _____ %

Girth _____ H.T.[1] _____ R.T. _____ No. of Courses _____

6. Heads: (a) Material _____ T.S. _____ (b) Material _____ T.S. _____

Location (Top, bottom, ends)	Thickness	Crown Radius	Knuckle Radius	Elliptical Ratio	Conical Apex Angle	Hemispherical Radius	Flat Diameter	Side to Press. (Conv. or Conc.)
(a)								
(b)								

If removable, bolts used _____ Other fastening _____
(Material, Spec. No., T.S., Size, Number) (Describe or attach sketch)

7. Jacket Closure: _____
(Describe as ogee and weld, bar, etc. If bar give dimensions, if bolted, describe or sketch)

8. Design pressure[2] 1250 psi at 575 °F

Drop Weight _____
Charpy Impact _____ ft-lb
at temp. of _____ °F

Items 9 and 10 to be completed for tube sections.

9. Tube Sheets: Stationary. Material _____ Dia. _____ Thickness ____ in. Attachment _____
(Kind & Spec. No.) (Subject to pressure) (Welded, Bolted)

Floating. Material _____ Dia. _____ Thickness ____ in. Attachment _____

10. Tubes: Material _____ O.D. ____ in. Thickness _____ inches or gage. Number _____ Type _____
(Str. or U)

Items 11–14 incl. to be completed for inner chambers of jacketed vessels, or channels of heat exchangers.

11. Shell: Material _____ T.S. _____ Nominal Thickness ____ in. Corrosion Allowance ____ in. Dia. ____ ft. ____ in. Length ____ ft. ____ in.
(Kind & Spec. No.) (Min. of Range Specified)

12. Seams: Long _____ H.T.[1] _____ R.T. _____ Efficiency _____ %

Girth _____ H.T.[1] _____ R.T. _____ No. of Courses _____

13. Heads: (a) Material _____ T.S. _____ (b) Material _____ T.S. _____

Location	Thickness	Crown Radius	Knuckle Radius	Elliptical Ratio	Conical Apex Angle	Hemispherical Radius	Flat Diameter	Side to Press. (Conv. or Conc.)
(a) Top, bottom, ends								
(b) Channel								

If removable, bolts used (a) _____ (b) _____ (c) _____ Other fastening _____
(Describe or attach sketch)

14. Design pressure[2] _____ psi at _____ °F

Drop Weight _____
Charpy Impact _____ ft-lb
at temp. of _____ °F

Items below to be completed for all vessels where applicable.

15. Safety Valve Outlets: Number _____ Size _____ Location _____

16. Nozzles:

Purpose (Inlet, Outlet, Drain)	Number	Dia. or Size	Type	Material	Thickness	Reinforcement Material	How Attached

17. Inspection Openings: Manholes, No. _____ Size _____ Location _____
Handholes, No. _____ Size _____ Location _____
Threaded, No. _____ Size _____ Location _____

18. Supports: Skirt

Sheet 2 of 2

FORM N-2 NPT CERTIFICATE HOLDERS' DATA REPORT FOR NUCLEAR PART AND APPURTENANCES*
As required by the Provision of the ASME Code Rules, Section III, Div. 1 {1813-039 SH 7067}

1. (a) Manufactured by General Electric Company, Castle Hayne Rd., Wilmington, N.C.
(Name and address of NPT Certificate Holder)

(b) Manufactured for General Electric Company, San Jose, California (NEBG)
(Name and address of N Certificate Holder for completed nuclear component)

2. Identification-Certificate Holder's Serial No. of Part A4611 Nat'l Bd. No.

(a) Constructed According to Drawing No. 768E534G001 Drawing Prepared by D. L. Peterson

(b) Description of Part Inspected Control Rod Drive, Model #7RDB144DG001

(c) Applicable ASME Code: Section III, Edition 1974, Addenda date W'75, Case No. N207 1361-2 Class 1

1. Cap 166B9274P1
(167A2343)
SA182 - F316
3/8 thick x 1 1/16 OD

2. Indicator Pipe 166B9313P1
SA312-TP316
3/4 sch 40-seamless pipe
0.113 wall thickness
1.065 max. dia.

3. Plug 159A1176P1
SA182-F304
1/4 thick x 0.812 OD

4. Flange 919D610P1 (719E474)
SA182-F304
3.37 thick x 9 5/8 OD
neck 1 1/16 thick x 5.0 OD
2.875 ID

5. Base 137C5311P1
XM-19 ASME SA479
3.0 OD x .884 ID

6. Ring Flange 114B5122P2
SA182-F304
1" thick x 5.0 OD x 1.75 ID

7. Cap Screw 117C4516P2
SA193-B6
6 ea. 1/2 dia. on 4 1/8 bolt circle

8. Plug 175A7961P1
SA182-F304
[illegible]

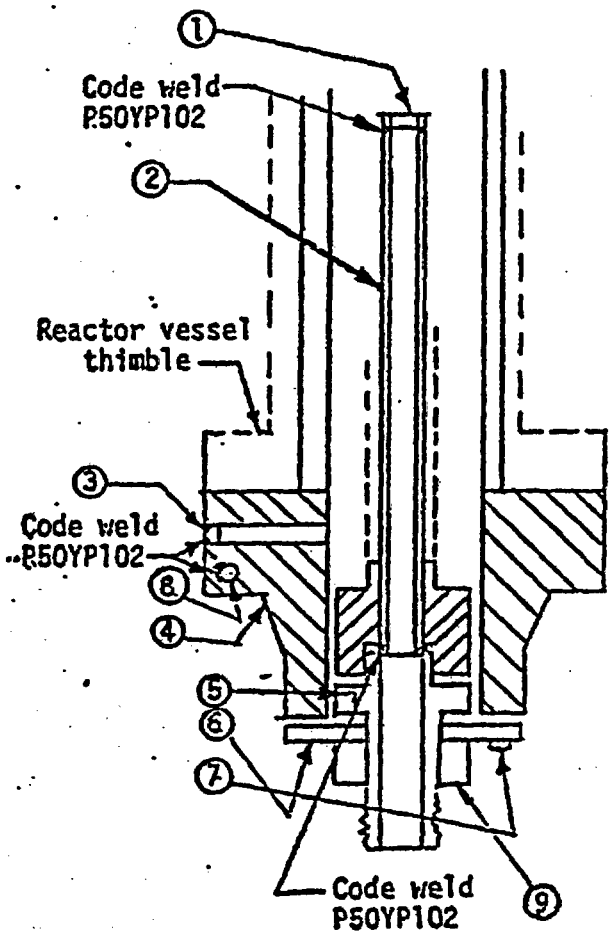

CONTROL ROD DRIVE
DWG - 768E534

9. Nut 137C5934P1
XM-19 SA479
1.30 thick x 2.62 dia.

00608

1B21-331

NIS-2/NR-1 OWNER'S REPORT FOR REPAIRS OR REPLACEMENTS

As required by the Provisions of the ASME Code Section XI

PNPP No. 9308 Rev. 9/11/00 NQI-1741

1. Owner: FIRSTENERGY CORP.
10 Center Road, Perry, Ohio 44081

Date 10-8-02
Sheet 1 of 1

2. Plant: Perry Nuclear Power Plant (PNPP)
10 Center Road, Perry, Ohio 44081

Unit one
WO 02-10623 R/1
(Repair Org. P.O. No., etc.)

3. Work Performed By: FIRSTENERGY Nuclear Operating Company PNPP
10 Center Road, Perry, Ohio 44081

Type Code Symbol Stamp NR
Authorization No. 33
Expiration Date 09-26-2005

4. Identification of System: Nuclear Boiler System (1B21)

5. (a) Applicable Construction Code: ASME SECTION III NB 8-8-03 TCL 8/8/03 ,1974 Edition
NAME/SECTION/DIVISION/CLASS

Winter 19 75 Addenda Code Case(s) 1644-5, N32-4, N242, 1728, N241, N272, N282, N413,

(b) Construction Code used for repairs, modifications, or replacements: 1974 winter 75 see above
Edition Addenda Code Case(s)

(c) ASME Code Section XI applicable for Inservice Inspection: 1989 no n/a
Edition Addenda Code Case(s)

(d) Applicable Edition of Section XI Utilized for Repairs, Modification, or Replacements:
19 89 , n/a 19 n/a Addenda n/a
Code Case(s)

(e) Design Responsibilities FIRST ENERGY NUCLEAR OPERATION COMPANY PNPP

6. Identification of Components Repaired, Modified, or Replacement Components

Name of Component	Name of Manufacturer	Manufacturer Serial No.	Nat. Board No.	Other ID.	Year Built	Repair, Replacement, or Modification	ASME Code Stamped
Piping System	Pullman Power	1B21	109	NA	1985	Modification	Yes

7. Description of Work: SEE REMARKS SECTION

8. Test Conducted: Hydrostatic- ☐ Pneumatic- ☐ Nominal Operating Pressure- ☐

Pressure na psi Test Temperature na degrees F Code Case(s) na

NIS-2/NR-1 OWNER'S REPORT FOR REPAIRS OR REPLACEMENTS (Back)

PNPP No. 9308 Rev. 9/11/00 NQI-1741

9. Remarks: Implemented ECP 02-0237to modify MSIV packing leak off line, by cutting and capping ¾" and 2" pipelines using new ¾"cap HT# 9314, new 2" cap Ht # 028H, new ¾" pipe HT# 231643, and weld rod HT # 65627, F5512, 124715. System abandoned in place, No VTII leakage test required.

NO NAMEPLATE/STAMPING PERFORMED DUE TO THE INTERFACE CONTROLS OF RA-2370

BEING IN EFFECT AND JURISDICTIONAL AUTHORITY CONCURRENCE HAVING BEEN RECEIVED.

Note: Attach all applicable Manufacturer's Data Reports. Supplemental sheets such as lists, sketches, or drawings may be used, provided (1) size is 8 1/2 in. x 11 in., (2) information in items 1 through 6 of this report is included on each sheet, and (3) each sheet is numbered and the number of sheets is recorded on the front of this form.

CERTIFICATE OF COMPLIANCE

I, John W. Messenger, certify that to the best of my knowledge and belief the statements made in this report are correct and the repair, modification or replacement of the items described above conforms to Section XI of the ASME Code and to the National Board Inspection Code "NR" rules.

National Board Certificate of Authorization No. 33 to use the "NR stamp expires Nov. 26,2005

Date 10/9, 2002 Signed FENOC-PNPP (name of repair organization) [signature] (authorized representative) QE (title)

8/8/03 FENOC-PNPP [signature] QC

CERTIFICATE OF INSPECTION/INSERVICE INSPECTION

I, L. D. Bussard, holding a valid commission issued by The National Board of Boiler and Pressure Vessel Inspectors and certificate of competency issued by the jurisdiction of OHIO and employed by FACTORY MUTUAL INS. CO. of JOHNSTON, RI have inspected the repair, modification or replacement described in this report on 10-14, 2002 and state that to the best of my knowledge and belief, this repair, modification or replacement has been completed in accordance with Section XI of the ASME Code and the National Board Inspection Code "NR" rules.

By signing this certificate, neither the undersigned nor my employer makes any warranty, expressed or implied, concerning the work described in this report. Furthermore, neither the undersigned nor my employer shall be liable in any manner for any personal injury, property damage or loss of any kind arising from or connected with this inspection.

Date 10-14, 2002 Signed [signature] (inspector) Commissions NB8563 N I OHio Comm (National Board (include endorsements), and jurisdiction, and no.)

Thomas J Lage NB9330 N I A OHIO COMM

1B21-332

NIS-2/NR-1 OWNER'S REPORT FOR REPAIRS OR REPLACEMENTS

As required by the Provisions of the ASME Code Section XI

PNPP No. 9308 Rev. 9/11/00 NQI-1741

1. Owner: FIRSTENERGY CORP.
10 Center Road, Perry, Ohio 44081

Date 10-8-02
Sheet 1 of 1

2. Plant: Perry Nuclear Power Plant (PNPP)
10 Center Road, Perry, Ohio 44081

Unit one
WO 02-10629 R/1
(Repair Org. P.O. No., etc.)

3. Work Performed By: FIRSTENERGY Nuclear Operating Company PNPP
10 Center Road, Perry, Ohio 44081

Type Code Symbol Stamp NR
Authorization No. 33
Expiration Date 09-26-2005

4. Identification of System: Nuclear Boiler System (1B21)

5. (a) Applicable Construction Code: ASME SECTION III NB 8-8-03 8/8/03 ,1974 Edition
NAME/SECTION/DIVISION/CLASS

Winter 19 75 Addenda Code Case(s) 1644-5, N32-4, N242, 1728, N241, N272, N282, N413,

(b) Construction Code used for repairs, modifications, or replacements: 1974 (Edition) winter 75 (Addenda) see above (Code Case(s))

(c) ASME Code Section XI applicable for Inservice Inspection: 1989 (Edition) no (Addenda) n/a (Code Case(s))

(d) Applicable Edition of Section XI Utilized for Repairs, Modification, or Replacements:
19 89 , n/a 19 n/a Addenda n/a (Code Case(s))

(e) Design Responsibilities FIRST ENERGY NUCLEAR OPERATION COMPANY PNPP

6. Identification of Components Repaired, Modified, or Replacement Components

Name of Component	Name of Manufacturer	Manufacturer Serial No.	Nat. Board No.	Other ID.	Year Built	Repair, Replacement, or Modification	ASME Code Stamped
Piping System	Pullman Power	1B21	109	NA	1985	Modification	Yes

7. Description of Work: SEE REMARKS SECTION

8. Test Conducted: Hydrostatic- ☐ Pneumatic- ☐ Nominal Operating Pressure- ☐

Pressure na psi Test Temperature na degrees F Code Case(s) na

NIS-2/NR-1 OWNER'S REPORT FOR REPAIRS OR REPLACEMENTS (Back)

PNPP No. 9308 Rev. 9/11/00 NQI-1741

9. Remarks: Implemented ECP 02-0237to modify MSIV packing leak off line, by cutting and capping ¾" and 2" pipelines using new ¾"cap HT# 9314, new 2" cap Ht # 028H, new ¾" pipe HT# 231643, and weld rod HT # 5512, 124715. System abandoned in place, VT II leakage test not required.

NO NAMEPLATE/STAMPING PERFORMED DUE TO THE INTERFACE CONTROLS OF RA-2370

BEING IN EFFECT AND JURISDICTIONAL AUTHORITY CONCURRENCE HAVING BEEN RECEIVED.

Note: Attach all applicable Manufacturer's Data Reports. Supplemental sheets such as lists, sketches, or drawings may be used, provided (1) size is 8 1/2 in. x 11 in., (2) information in items 1 through 6 of this report is included on each sheet, and (3) each sheet is numbered and the number of sheets is recorded on the front of this form.

CERTIFICATE OF COMPLIANCE

I, John W. Messenger, certify that to the best of my knowledge and belief the statements made in this report are correct and the repair, modification or replacement of the items described above conforms to Section XI of the ASME Code and to the National Board Inspection Code "NR" rules.

National Board Certificate of Authorization No. 33 to use the "NR stamp expires Nov. 26, 2005

Date 10/9, 20 02 Signed FENOC-PNPP (name of repair organization) Messenger (authorized representative) QE (title)

8-8-03 FENOC PNPP QC

CERTIFICATE OF INSPECTION/INSERVICE INSPECTION

I, L D Bussard, holding a valid commission issued by The National Board of Boiler and Pressure Vessel Inspectors and certificate of competency issued by the jurisdiction of OHIO and employed by FACTORY MUTUAL INS. CO. of JOHNSTON, RI have inspected the repair, modification or replacement described in this report on 10-14, 20 02 and state that to the best of my knowledge and belief, this repair, modification or replacement has been completed in accordance with Section XI of the ASME Code and the National Board Inspection Code "NR" rules.

By signing this certificate, neither the undersigned nor my employer makes any warranty, expressed or implied, concerning the work described in this report. Furthermore, neither the undersigned nor my employer shall be liable in any manner for any personal injury, property damage or loss of any kind arising from or connected with this inspection.

Date 10-14, 20 02 Signed (inspector) Commissions NB8543 NI Ohio Comm. (National Board (include endorsements), and jurisdiction, and no.)

Thomas H Lapp ANII NB 9330 NIA OHIO COMM. 8/8/03

1B21-333

NIS-2/NR-1 OWNER'S REPORT FOR REPAIRS OR REPLACEMENTS

As required by the Provisions of the ASME Code Section XI

PNPP No. 9308 Rev. 9/11/00 NQI-1741

1. Owner: FIRSTENERGY CORP.
10 Center Road, Perry, Ohio 44081

Date 10-9-02
Sheet 1 of 1

2. Plant: Perry Nuclear Power Plant (PNPP)
10 Center Road, Perry, Ohio 44081

Unit one
WO 02-10628 R/1
(Repair Org. P.O. No., etc.)

3. Work Performed By: FIRSTENERGY Nuclear Operating Company PNPP
10 Center Road, Perry, Ohio 44081

Type Code Symbol Stamp NR
Authorization No. 33
Expiration Date 09-26-2005

4. Identification of System: Nuclear Boiler System (1B21)

5. (a) Applicable Construction Code: ASME SECTION III NB #17 8-8-03 TGL 8/8/03 ,1974 Edition
NAME/SECTION/DIVISION/CLASS

Winter 19 75 Addenda Code Case(s) 1644-5, N32-4, N242, 1728, N241, N272, N282, N413

(b) Construction Code used for repairs, modifications, or replacements: 1974 winter 75 see above
Edition Addenda Code Case(s)

(c) ASME Code Section XI applicable for Inservice Inspection: 1989 no n/a
Edition Addenda Code Case(s)

(d) Applicable Edition of Section XI Utilized for Repairs, Modification, or Replacements:
19 89 , n/a 19 n/a Addenda n/a
Code Case(s)

(e) Design Responsibilities FIRST ENERGY NUCLEAR OPERATION COMPANY PNPP

6. Identification of Components Repaired, Modified, or Replacement Components

Name of Component	Name of Manufacturer	Manufacturer Serial No.	Nat. Board No.	Other ID.	Year Built	Repair, Replacement, or Modification	ASME Code Stamped
piping	Pullman Power	1B21	109	N/A	1985	Modification	yes

7. Description of Work: SEE REMARKS SECTION

8. Test Conducted: Hydrostatic- ☐ Pneumatic- ☐ Nominal Operating Pressure- ☐

Pressure na psi Test Temperature na degrees F Code Case(s) na

NIS-2/NR-1 OWNER'S REPORT FOR REPAIRS OR REPLACEMENTS (Back)

PNPP No. 9308 Rev. 9/11/00 NQI-1741

9. Remarks: Implemented ECP-02-0237 to modify MSIV packing leak off line, by cutting and capping ¾" and 2" pipelines using new ¾" cap HT# 9314, new 2" cap HT# 231643 and weld rod E7018 3/32" HT# 124715 and ER70S –2 3/32" HT# F5512. System abandoned in place, VT II leakage test not required.

NO NAMEPLATE/STAMPING PERFORMED DUE TO THE INTERFACE CONTROLS OF RA-2370

BEING IN EFFECT AND JURISDICTIONAL AUTHORITY CONCURRENCE HAVING BEEN RECEIVED.

Note: Attach all applicable Manufacturer's Data Reports. Supplemental sheets such as lists, sketches, or drawings may be used, provided (1) size is 8 1/2 in. x 11 in., (2) information in items 1 through 6 of this report is included on each sheet, and (3) each sheet is numbered and the number of sheets is recorded on the front of this form.

CERTIFICATE OF COMPLIANCE

I, David E. Lindquist, certify that to the best of my knowledge and belief the statements made in this report are correct and the repair, modification or replacement of the items described above conforms to Section XI of the ASME Code and to the National Board Inspection Code "NR" rules.

National Board Certificate of Authorization No. 33 to use the "NR stamp expires Nov 26, 20 05

Date Oct 9, 20 02 Signed FENOC-PNPP (name of repair organization) (authorized representative) QE (title)

8-8-03 FENOC-PNPP QC

CERTIFICATE OF INSPECTION/INSERVICE INSPECTION

I, L. D. Bussard, holding a valid commission issued by The National Board of Boiler and Pressure Vessel Inspectors and certificate of competency issued by the jurisdiction of OHIO and employed by FACTORY MUTUAL INS. CO. of JOHNSTON, RI have inspected the repair, modification or replacement described in this report on 10-14, 20 02 and state that to the best of my knowledge and belief, this repair, modification or replacement has been completed in accordance with Section XI of the ASME Code and the National Board Inspection Code "NR" rules.

By signing this certificate, neither the undersigned nor my employer makes any warranty, expressed or implied, concerning the work described in this report. Furthermore, neither the undersigned nor my employer shall be liable in any manner for any personal injury, property damage or loss of any kind arising from or connected with this inspection.

Date 10-14, 2002 Signed (inspector) Commissions NB8563, N I Ohio Comm. (National Board (include endorsements), and jurisdiction, and no.)

Thomas Lapp ANII NB9338 NIA OHIO COMM 8/8/03

1B21-334

NIS-2/NR-1 OWNER'S REPORT FOR REPAIRS OR REPLACEMENTS

As required by the Provisions of the ASME Code Section XI

PNPP No. 9308 Rev. 9/11/00 NQI-1741

1. Owner: FIRSTENERGY CORP.
10 Center Road, Perry, Ohio 44081

Date 10-9-02
Sheet 1 of 1

2. Plant: Perry Nuclear Power Plant (PNPP)
10 Center Road, Perry, Ohio 44081

Unit one
WO 02-10627 R/1
(Repair Org. P.O. No., etc.)

3. Work Performed By: FIRSTENERGY Nuclear Operating Company PNPP
10 Center Road, Perry, Ohio 44081

Type Code Symbol Stamp NR
Authorization No. 33
Expiration Date 09-26-2005

4. Identification of System: Nuclear Boiler System (1B21)

5. (a) Applicable Construction Code: ASME SECTION III NB TGL 8/8/03 ,1974 Edition
NAME/SECTION/DIVISION/CLASS

Winter 19 75 Addenda Code Case(s) 1644-5, n32-4, n242, 1728, N241, N272, N282, N413

(b) Construction Code used for repairs, modifications, or replacements: 1974 (Edition) winter 75 (Addenda) see above (Code Case(s))

(c) ASME Code Section XI applicable for Inservice Inspection: 1989 (Edition) no (Addenda) n/a (Code Case(s))

(d) Applicable Edition of Section XI Utilized for Repairs, Modification, or Replacements:
19 89 , n/a 19 n/a Addenda n/a
Code Case(s)

(e) Design Responsibilities FIRST ENERGY NUCLEAR OPERATION COMPANY PNPP

6. Identification of Components Repaired, Modified, or Replacement Components

Name of Component	Name of Manufacturer	Manufacturer Serial No.	Nat. Board No.	Other ID.	Year Built	Repair, Replacement, or Modification	ASME Code Stamped
piping	Pullman Power	1B21	109	N/A	1985	Modification	yes

7. Description of Work: SEE REMARKS SECTION

8. Test Conducted: Hydrostatic- ☐ Pneumatic- ☐ Nominal Operating Pressure- ☐

Pressure na psi Test Temperature na degrees F Code Case(s) na

NIS-2/NR-1 OWNER'S REPORT FOR REPAIRS OR REPLACEMENTS (Back)

PNPP No. 9308 Rev. 9/11/00 NQI-1741

9. Remarks: Implemented ECP-02-0237 to modify MSIV packing leak off line, by cutting and capping ¾" and 2" pipelines using new ¾" cap HT# 9314, new 2" cap HT# 231643 and weld rod E7018 3/32" HT# 124715 and ER70S –2 3/32" HT# F5512. System abandoned in place, VT II leakage test not required.

NO NAMEPLATE/STAMPING PERFORMED DUE TO THE INTERFACE CONTROLS OF RA-2370

BEING IN EFFECT AND JURISDICTIONAL AUTHORITY CONCURRENCE HAVING BEEN RECEIVED.

Note: Attach all applicable Manufacturer's Data Reports. Supplemental sheets such as lists, sketches, or drawings may be used, provided (1) size is 8 1/2 in. x 11 in., (2) information in items 1 through 6 of this report is included on each sheet, and (3) each sheet is numbered and the number of sheets is recorded on the front of this form.

CERTIFICATE OF COMPLIANCE

I, David E. Lindquist, certify that to the best of my knowledge and belief the statements made in this report are correct and the repair, modification or replacement of the items described above conforms to Section XI of the ASME Code and to the National Board Inspection Code "NR" rules.

National Board Certificate of Authorization No. 33 to use the "NR stamp expires Nov 26, 20 05

Date Oct 9, 20 02 Signed FENOC-PNPP (name of repair organization) (authorized representative) QE (title)

8-8-03 FENOC-PNPP QC

CERTIFICATE OF INSPECTION/INSERVICE INSPECTION

I, L. D. Bussard, holding a valid commission issued by The National Board of Boiler and Pressure Vessel Inspectors and certificate of competency issued by the jurisdiction of OHIO and employed by FACTORY MUTUAL INS. CO. of JOHNSTON, RI have inspected the repair, modification or replacement described in this report on 10-14, 20 02 and state that to the best of my knowledge and belief, this repair, modification or replacement has been completed in accordance with Section XI of the ASME Code and the National Board Inspection Code "NR" rules.

By signing this certificate, neither the undersigned nor my employer makes any warranty, expressed or implied, concerning the work described in this report. Furthermore, neither the undersigned nor my employer shall be liable in any manner for any personal injury, property damage or loss of any kind arising from or connected with this inspection.

Date 10-14, 2002 Signed (inspector) Commissions NB8563 NI Ohio Comm. (National Board (include endorsements), and jurisdiction, and no.)

Thomas L Sapp NB9330 NIA Ohio Comm. 8/8/03

1B21-335

NIS-2/NR-1 OWNER'S REPORT FOR REPAIRS OR REPLACEMENTS

As required by the Provisions of the ASME Code Section XI

PNPP No. 9308 Rev. 9/11/00 NQI-1741

1. Owner: FIRSTENERGY CORP.
10 Center Road, Perry, Ohio 44081

Date 04/30/03
Sheet 1 of 2

2. Plant: Perry Nuclear Power Plant (PNPP)
10 Center Road, Perry, Ohio 44081

Unit 1
01-016128-000, R-0
(Repair Org. P.O. No., etc.)

3. Work Performed By: FIRSTENERGY Nuclear Operating Company PNPP
10 Center Road, Perry, Ohio 44081

Type Code Symbol Stamp NR
Authorization No. 33
Expiration Date 9-26-05

4. Identification of System: B21 Nuclear Boiler System

5. (a) Applicable Construction Code: ASME Sec III, Subsection NB ,1974 Edition
NAME/SECTION/DIVISION/CLASS

Winter 19 75 Addenda Code Case(s) 1728, 1644-4 & 272

(b) Construction Code used for repairs, modifications, or replacements: 1974 (Edition) W75 (Addenda) N/A (Code Case(s))

(c) ASME Code Section XI applicable for Inservice Inspection: 1989 (Edition) N/A (Addenda) N/A (Code Case(s))

(d) Applicable Edition of Section XI Utilized for Repairs, Modification, or Replacements:
19 89 , N/A 19 N/A Addenda N/A
Code Case(s)

(e) Design Responsibilities FIRSTENERGY Nuclear Operating Company

6. Identification of Components Repaired, Modified, or Replacement Components

Name of Component	Name of Manufacturer	Manufacturer Serial No.	Nat. Board No.	Other ID.	Year Built	Repair, Replacement, or Modification	ASME Code Stamped
Support	E-Systems	1B21	N/A	1B21-G7071	1978	replacement	Yes

7. Description of Work: Replaced original Snubber Serial Number 138 on Support 1B21- G0006-S101C with Rebuilt Serial Number 133

8. Test Conducted: Hydrostatic- ☐ Pneumatic- ☐ Nominal Operating Pressure- ☐ Other- ☐
Pressure N/A psi Test Temperature N/A degrees F Code Case(s) N/A

NIS-2/NR-1 OWNER'S REPORT FOR REPAIRS OR REPLACEMENTS (Back)

PNPP No. 9308 Rev. 9/11/00 NQI-1741

9. Remarks: _____

NO NAMEPLATE/STAMPING PERFORMED DUE TO THE INTERFACE CONTROLS OF RA-2370 BEING IN EFFECT AND JURISDICTIONAL AUTHORITY CONCURRENCE HAVING BEEN RECEIVED.

Note: Attach all applicable Manufacturer's Data Reports. Supplemental sheets such as lists, sketches, or drawings may be used, provided (1) size is 8 1/2 in. x 11 in., (2) information in items 1 through 6 of this report is included on each sheet, and (3) each sheet is numbered and the number of sheets is recorded on the front of this form.

CERTIFICATE OF COMPLIANCE

I, Lester J. Erbacher, certify that to the best of my knowledge and belief the statements made in this report are correct and the repair, modification or replacement of the items described above conforms to Section XI of the ASME Code and to the National Board Inspection Code "NR" rules.

National Board Certificate of Authorization No. 33 to use the "NR stamp expires 9-26, 20 05

Date April 30, 20 03 Signed FENOC-PNPP (name of repair organization) (authorized representative) QE (title)

CERTIFICATE OF INSPECTION/INSERVICE INSPECTION

I, Thomas G. Laps, holding a valid commission issued by The National Board of Boiler and Pressure Vessel Inspectors and certificate of competency issued by the jurisdiction of OHIO and employed by Harford Steam Boiler CT. of Hartford, Conn have inspected the repair, modification or replacement described in this report on May 1, 20 03 and state that to the best of my knowledge and belief, this repair, modification or replacement has been completed in accordance with Section XI of the ASME Code and the National Board Inspection Code "NR" rules.

By signing this certificate, neither the undersigned nor my employer makes any warranty, expressed or implied, concerning the work described in this report. Furthermore, neither the undersigned nor my employer shall be liable in any manner for any personal injury, property damage or loss of any kind arising from or connected with this inspection.

Date May 1, 20 03 Signed Thomas G Laps (inspector) Commissions NB9330 "N" "I" "A" Ohio Comm. (National Board (include endorsements), and jurisdiction, and no.)

M

(CORRECTED COPY) 1821-335 2 of 2

FORM NF-1 MANUFACTURERS' DATA REPORT FOR COMPONENT SUPPORTS*
As Required by the Provisions of the ASME Code Rules, Section III, Division 1

1. Manufactured by E-Systems, Inc., Montek Division, Salt Lake City, UT (Name and address of manufacturer)
2. Manufacturer for General Electric Company, San Jose, California (Name and address of purchaser or owner)
3. Location of Installation Perry 2 Main Steam, North Perry, Ohio
4. Identification

(a) Component Support I.D. No.	(b) Canadian Registration No.	(c) Applicable Drawings with Last Rev. & Date	(d) Stress Report or Load Capacity Data Sheet	(e) Type of Component Support	(f) Class	(g) Nat'l Board No.	(h) Year Built
(1) 107	N/A	152607(H)	LCD152000-602	Linear	1	None	1981
(2) 106	"	"	"	"	"	"	"
(3) 109	"	"	"	"	"	"	"
(4) 108	"	"	"	"	"	"	"
(5) 110	"	"	"	"	"	"	"
(6) 057	"	152207(E)	"	"	"	"	"
(7) 116	"	"	"	"	"	"	"
(8) 002	"	"	"	"	"	"	"
(9) 160	"	"	"	"	"	"	"
(10) 133	"	"	"	"	"	"	"

5. Remarks: * Typing Error, added -1. APR 29 1982 a ER 4/30/82

CERTIFICATE OF COMPLIANCE

We certify that the statements made in this report are correct and that these components supports conform to the rules of construction of the ASME Code for Nuclear Power Plant Components, Section III, Division 1, Edition 1974, Addenda Summer 1975 (Date), Code Case No. 1644-4, 1682-1, 1706, N242-1.*

Date August 3, 1981 Signed E-Systems, Inc., Montek Div (Manufacturer) by J. Lynch

Our ASME Certificate of Authorization No. 1356 to use the NPT (NPT)

Symbol expires 1 March 1982 (Date).

GCM 6-26-82A

CERTIFICATION OF DESIGN

Design Information on File at E-Systems, Inc., Montek Division, Salt Lake City, UT

Stress Report or Load Capacity Data Sheets on File at: E-Systems, Inc., Montek Division, Salt Lake City, UT

Design Specifications Certified by (1) M.D. Potter PE State CA

Reg. No. 25904.

Stress Analysis Report or Load Capacity Data Sheets Certified by (1) Robert Lee Warren III

PE State Utah Reg. No. 3942.

(1) List name only, signature not required.

*Supplemental sheets in form of lists, sketches or drawings may be used provided (1) size is 8½ in., (2) information in items 1, 2, 4c, 4g on this data report is included on each sheet, and (3) each sheet is numbered and number of sheets is recorded at top of this form.

(1/76) This form (E00075) is available from the Order Dept., ASME, 345 E. 47 St., New York, N.Y. 10017

PAGE NO 2-N

FORM NF-1 (Back)

CERTIFICATE OF SHOP INSPECTION

I, the undersigned, holding a valid commission issued by the National Board of Boiler and Pressure Vessel Inspectors and the State or Province of Utah and employed by Royal Globe Ins. of New York, New York have inspected the component supports described in this Manufacturers' Data Report on August 3, 19 81, and state that to the best of my knowledge and belief the Manufacturer has constructed these component supports in accordance with the ASME Code for Nuclear Power Plant Components.

By signing this certificate, neither the Inspector nor his employer makes any warranty, expressed or implied, concerning the component supports described in this Manufacturers' Data Report. Furthermore, neither the Inspector nor his employer shall be liable in any manner for any personal injury or property damage or a loss of any kind arising from or connected with this inspection.

Date 8/3/81

Signed A. L. Rockhouse Commissions Utah 2
(Nat'l Bd., State, Prov., and No.)

CERTIFICATION OF FIELD INSPECTION

I, the undersigned, holding a valid commission issued by the National Board of Boiler and Pressure Vessel Inspectors and the State or Province of _____ and employed by _____ of _____ have compared the statements in this Manufacturers' Data Report with the described component supports and state that the parts referred to as data items _____, not included in the certificate of shop inspection, have been inspected by me and that to the best of my knowledge and belief the Manufacturer has constructed these component supports in accordance with the ASME Code for Nuclear Power Plant Components.

By signing this certificate neither the Inspector nor his employer makes any warranty, expressed or implied, concerning the component supports described in this Manufacturers' Data Report. Furthermore, neither the Inspector nor his employer shall be liable in any manner for any personal injury or property damage or a loss of any kind arising from or connected with this inspection.

Date _____

Signed _____ Commissions _____
(Nat'l Bd., State, Prov., and No.)

GCM
8-24-82

PAGE NO. 2-0

1B21-337

NIS-2/NR-1 OWNER'S REPORT FOR REPAIRS OR REPLACEMENTS

As required by the Provisions of the ASME Code Section XI

PNPP No. 9308 Rev. 9/11/00 NQI-1741

1. Owner: FIRSTENERGY CORP. Date 6-20-03
10 Center Road, Perry, Ohio 44081 Sheet 1 of 2

2. Plant: Perry Nuclear Power Plant (PNPP) Unit ONE
10 Center Road, Perry, Ohio 44081 WO 01-17335-00-,001 R/0
(Repair Org. P.O. No., etc.)

3. Work Performed By: FIRSTENERGY Nuclear Operating Company PNPP Type Code Symbol Stamp NR
10 Center Road, Perry, Ohio 44081 Authorization No. 33
Expiration Date 9-26-05

4. Identification of System: 1B21 NUCLEAR BOILER PROCESS INSTRUMENTATION

5. (a) Applicable Construction Code: ASME SECTION III NB ,1974 Edition
NAME/SECTION/DIVISION/CLASS

WINTER 19 75 Addenda Code Case(s) N224-1,N225,N3,N413,N71-9,N71-11,1644-5 1728, N272.

(b) Construction Code used for repairs, modifications, or replacements: 1974 (Edition) WINTER 75 (Addenda) * (Code Case(s))

(c) ASME Code Section XI applicable for Inservice Inspection: 1989 (Edition) N/A (Addenda) N/A (Code Case(s))

(d) Applicable Edition of Section XI Utilized for Repairs, Modification, or Replacements:
19 89 , EDITION 19 N/A Addenda N/A Code Case(s)

(e) Design Responsibilities FIRSTENERGY NUCLEAR OPERATING COMPANY PNPP

6. Identification of Components Repaired, Modified, or Replacement Components

Name of Component	Name of Manufacturer	Manufacturer Serial No.	Nat. Board No.	Other ID.	Year Built	Repair, Replacement, or Modification	ASME Code Stamped
PIPING SYSTEM	GENERAL ELECTRIC	1B21	64084	N/A	1985	REPLACEMENT	YES

7. Description of Work: REMOVED VALVE S/N 160871 AND INSTALLED VALVE S/N 160848 @ 1B21F041B USING (2) NEW 1-5/8-8 INLET STUDS HEAT CODE Z4K ,AND (12) NEW 1-5/8-8 NUTS HEAT CODE D284.

8. Test Conducted: Hydrostatic- ☐ Pneumatic- ☐ Nominal Operating Pressure- ☒ Other- ☐
Pressure 1025 psi Test Temperature 130 degrees F Code Case(s) N/A

NIS-2/NR-1 OWNER'S REPORT FOR REPAIRS OR REPLACEMENTS (Back)

PNPP No. 9308 Rev. 9/11/00 NQI-1741

9. Remarks: _____

NO NAMEPLATE/STAMPING PERFORMED DUE TO THE INTERFACE CONTROLS OF RA-2370 BEING IN EFFECT AND JURISDICTIONAL AUTHORITY CONCURRENCE HAVING BEEN RECEIVED.

Note: Attach all applicable Manufacturer's Data Reports. Supplemental sheets such as lists, sketches, or drawings may be used, provided (1) size is 8 1/2 in. x 11 in., (2) information in items 1 through 6 of this report is included on each sheet, and (3) each sheet is numbered and the number of sheets is recorded on the front of this form.

CERTIFICATE OF COMPLIANCE

I, JOHN W. MESSENGER, certify that to the best of my knowledge and belief the statements made in this report are correct and the repair, modification or replacement of the items described above conforms to Section XI of the ASME Code and to the National Board Inspection Code "NR" rules.

National Board Certificate of Authorization No. 33 to use the "NR stamp expires SEPT. 26, 20 05

Date JUNE 20, 20 03 Signed FENOC-PNPP (name of repair organization) [signature] (authorized representative) QE (title)

CERTIFICATE OF INSPECTION/INSERVICE INSPECTION

I, THOMAS G. LAPS, holding a valid commission issued by The National Board of Boiler and Pressure Vessel Inspectors and certificate of competency issued by the jurisdiction of OHIO and employed by H.S.B. CT. of HARTFORD, CONN. have inspected the repair, modification or replacement described in this report on AUG 4, 20 03 and state that to the best of my knowledge and belief, this repair, modification or replacement has been completed in accordance with Section XI of the ASME Code and the National Board Inspection Code "NR" rules.

By signing this certificate, neither the undersigned nor my employer makes any warranty, expressed or implied, concerning the work described in this report. Furthermore, neither the undersigned nor my employer shall be liable in any manner for any personal injury, property damage or loss of any kind arising from or connected with this inspection.

Date Aug. 4, 20 03 Signed Thomas G Laps (inspector) Commissions NB 9330 " " " " N E A OHIO COMM. (National Board (include endorsements), and jurisdiction, and no.)

1B21-337 page 2 of 2

* Corrected report

FORM NV-1 N CERTIFICATE HOLDERS' DATA REPORT FOR SAFETY AND SAFETY RELIEF VALVES*

As Required by the Provisions of the ASME Code, Section III, Div. I

1. Manufactured by G. Dikkers & Co. NV. Hengelo (O) The Netherlands (Name and Address of N Certificate Holder)
2. Manufactured for General Electric, San Jose, California (Name and Address of Purchaser or Owner)
3. Location of Installation Perry I North Perry Ohio (Name and Address)
4. (CRN) G 471-6/125.04.03 rev. 6 (Drawing No.) 34 (Nat'l. Brd. No.) 1978 (Year Built)
5. Valve G471 (Model No., Series No.) Identifying Nos. 160848 (N Certificate Holder's Serial No.)

Type Safety/Relief (Safety, Safety Relief, Pilot, Power Actuated)

Orifice Size 4,84 inch Nominal Inlet Size 8" inch Outlet Size 10" inch

6. Set Pressure (PSIG) 1165 Rated Temperature 585 °F

Stamped Capacity 905732 lbs/hr (Sat. Steam) @ 3 % Overpressure Blowdown (PSIG) 43.0

Hydrostatic Test (PSIG) Inlet 2350 Outlet 975 (Applicable to valves for closed systems only)

7. Pressure Retaining Pieces

	Serial No. or Identification	Material Specification Incl. Type or Grade
* Body	05.48.7 s.n. 2	SA 352 LCB
Bonnet or Yoke	04.14.8 s.n. 1	SA 352 LCB
Support Rods		
Nozzle	AEU 032	SA 350 LF2
Disc	61.03.8 4A	SA 351 CF3A
Spring Washers	21.16.53 s.n. 19	45 Cr Mo V 67
Adjusting Screw	AFU 056 AFU 009	SA 182 F 316
Spindle	AEW 036	A 564-74 type 630 cond. H1100
Spring		
Bolting	AJZ/AJR/AKA/AJJ/ALR/AUY/	SA 193-B7/SA 194-7/SA 194-2H
~~Other Pieces~~	AMR/AJM/AJL	
Liner	57.06.8 s.n. 1	SA 351 CF3A
Cover	58.04.8 s.n. 1	SA 351 CF8M
Vent. Pipe	AFW 002	SA 105
Flanges	AFV 048 AFV 061	SA 105

Max. outside diam. valve body 478 mm (18,82)"

Max. outside length valve 1645 mm (64,76)"

* Supplemental sheets in form of lists, sketches or drawings may be used provided (1) size is 8-1/2" × 11", (2) information in Items 1-2 on this Data Report is included on each sheet, and (3) each sheet is numbered and number of sheets is recorded at top of this form.

(10/77) This form (E00042) may be obtained from the Order Dept., ASME, 345 E. 47th St., New York, N.Y. 10017

FORM NV-1 (Back)

CERTIFICATE OF COMPLIANCE

We certify that the statements made in this report are correct and that this valve conforms to the rules of construction of the ASME Code for Nuclear Power Plant Components, Section III, Div. 1., 1974 Edition, Addenda ~~Sum~~ '76 (Date).
Code Case No. N.A.

Date 81.06-25 Signed G. Dikkers & Co NV (N Certificate Holder) by [signature]

Our ASME Certificate of Authorization No. 1806 to use the NV (NV) symbol expires 1st. July 1980 (Date).

CERTIFICATION OF DESIGN

Design information on file at General Electric and Perry II
Stress analysis report (Class 1 only) on file at General Electric and Perry II

Design specifications certified by[1] Boyd P. Brooks
PE State California Reg. No. 13655
Stress report certified by[1] Robert L. Weiss
PE State California/Illinois Reg. No. M 14921/62-25749

[1] Signature not required—list name only.

CERTIFICATE OF SHOP INSPECTION

I, the undersigned, holding a valid commission issued by the National Board of Boiler and Pressure Vessel Inspectors and the State or Province of Ohio. PA and employed by Kemper Ins. of Long Grove Ill have inspected the pump, or valve, described in this Data Report on 24-11, 1978 and state that to the best of my knowledge and belief, the N Certificate Holder has constructed this pump, or valve, in accordance with the ASME Code for Nuclear Power Plant Components.

By signing this certificate, neither the Inspector nor his employer makes any warrant, expressed or implied, concerning the equipment described in this Data Report. Furthermore, neither the Inspector nor his employer shall be liable in any manner for any personal injury or property damage or a loss of any kind arising from or connected with this inspection.

Date 6-26 1981
Signed J. W. [signature] (Inspector) Commissions NB 4805 (Nat'l. Bd., State Prov. and No.)

1B21-338

NIS-2/NR-1 OWNER'S REPORT FOR REPAIRS OR REPLACEMENTS

As required by the Provisions of the ASME Code Section XI

PNPP No. 9308 Rev. 9/11/00 NQI-1741

1. Owner: FIRSTENERGY CORP.
10 Center Road, Perry, Ohio 44081

Date 6-20-03
Sheet 1 of 2

2. Plant: Perry Nuclear Power Plant (PNPP)
10 Center Road, Perry, Ohio 44081

Unit ONE
WO 01-17337-000,001 R/0
(Repair Org. P.O. No., etc.)

3. Work Performed By: FIRSTENERGY Nuclear Operating Company PNPP
10 Center Road, Perry, Ohio 44081

Type Code Symbol Stamp NR
Authorization No. 33
Expiration Date 9-26-05

4. Identification of System: 1B21 NUCLEAR BOILER PROCESS INSTRUMENTATION

5. (a) Applicable Construction Code: ASME SECTION III NB ,1974 Edition
NAME/SECTION/DIVISION/CLASS

WINTER 19 75 Addenda Code Case(s) N224-1,N225,N3,N413,N71-9,N71-11,1644-5 1728, N272.

(b) Construction Code used for repairs, modifications, or replacements: 1974 (Edition) WINTER 75 (Addenda) * (Code Case(s))

(c) ASME Code Section XI applicable for Inservice Inspection: 1989 (Edition) N/A (Addenda) N/A (Code Case(s))

(d) Applicable Edition of Section XI Utilized for Repairs, Modification, or Replacements:
19 89 , EDITION 19 N/A Addenda N/A Code Case(s)

(e) Design Responsibilities FIRSTENERGY NUCLEAR OPERATING COMPANY PNPP

6. Identification of Components Repaired, Modified, or Replacement Components

Name of Component	Name of Manufacturer	Manufacturer Serial No.	Nat. Board No.	Other ID.	Year Built	Repair, Replacement, or Modification	ASME Code Stamped
PIPING SYSTEM	GENERAL ELECTRIC	1B21	64084	N/A	1985	REPLACEMENT	YES

7. Description of Work: REMOVED VALVE S/N 160349 AND INSTALLED VALVE S/N 160886 @ 1B21F041B USING (2) NEW 1-5/8-8 INLET STUDS HEAT CODE Z4K ,AND (12) NEW 1-5/8-8 NUTS (10) HEAT CODE D284, AND (2) HEAT CODE TCD.

8. Test Conducted: Hydrostatic- ☐ Pneumatic- ☐ Nominal Operating Pressure- ☒ Other- ☐
Pressure 1025 psi Test Temperature 130 degrees F Code Case(s) N/A

NIS-2/NR-1 OWNER'S REPORT FOR REPAIRS OR REPLACEMENTS (Back)

PNPP No. 9308 Rev. 9/11/00 NQI-1741

9. Remarks: _____

NO NAMEPLATE/STAMPING PERFORMED DUE TO THE INTERFACE CONTROLS OF RA-2370 BEING IN EFFECT AND JURISDICTIONAL AUTHORITY CONCURRENCE HAVING BEEN RECEIVED.

Note: Attach all applicable Manufacturer's Data Reports. Supplemental sheets such as lists, sketches, or drawings may be used, provided (1) size is 8 1/2 in. x 11 in., (2) information in items 1 through 6 of this report is included on each sheet, and (3) each sheet is numbered and the number of sheets is recorded on the front of this form.

CERTIFICATE OF COMPLIANCE

I, JOHN W. MESSENGER, certify that to the best of my knowledge and belief the statements made in this report are correct and the repair, modification or replacement of the items described above conforms to Section XI of the ASME Code and to the National Board Inspection Code "NR" rules.

National Board Certificate of Authorization No. 33 to use the "NR stamp expires SEPT. 26, 20 05

Date JUNE 20, 20 03 Signed FENOC-PNPP (name of repair organization) [signature] (authorized representative) QE (title)

CERTIFICATE OF INSPECTION/INSERVICE INSPECTION

I, THOMAS G. LAPS, holding a valid commission issued by The National Board of Boiler and Pressure Vessel Inspectors and certificate of competency issued by the jurisdiction of OHIO and employed by H.S.B. CT. of HARTFORD, CONN. have inspected the repair, modification or replacement described in this report on JUNE 30, 2003 and state that to the best of my knowledge and belief, this repair, modification or replacement has been completed in accordance with Section XI of the ASME Code and the National Board Inspection Code "NR" rules.

By signing this certificate, neither the undersigned nor my employer makes any warranty, expressed or implied, concerning the work described in this report. Furthermore, neither the undersigned nor my employer shall be liable in any manner for any personal injury, property damage or loss of any kind arising from or connected with this inspection.

Date JUNE 30, 20 03 Signed Thomas G. Laps (inspector) Commissions NB9330 NIA OHIO CONN (National Board (include endorsements), and jurisdiction, and no.)

* corrected report

FORM NV-1 N CERTIFICATE HOLDERS' DATA REPORT FOR SAFETY AND SAFETY RELIEF VALVES*

As Required by the Provisions of the ASME Code, Section III, Div. I

1B21-338 pg 2 of 2

1. Manufactured by G. Dikkers & Co. NV, Hengelo (O) The Netherlands
(Name and Address of N Certificate Holder)

2. Manufactured for General Electric, San Jose, California
(Name and Address of Purchaser or Owner)

3. Location of Installation Perry I+II spares North Perry Ohio
(Name and Address)

G 471-6/125.04.03 rev. 6 (CRN) | G471 (Drawing No.) | 146 (Nat'l. Brd. No.) | 1979 (Year Built)

5. Valve (Model No., Series No.) Safety/Relief Identifying Nos. 160886 (N Certificate Holder's Serial No.)

Type Safety, Safety Relief, Pilot, Power Actuated

Orifice Size 4,84 inch Nominal Inlet Size 8" (Flange) inch Outlet Size 10" inch

6. Set Pressure (PSIG) 1165 Rated Temperature 585 °F

Stamped Capacity 905732 lbs/hr Sat. Steam @ 2350 % Overpressure Blowdown (PSIG) 107,14

Hydrostatic Test (PSIG) Inlet Outlet 975 (Applicable to valves for closed systems only)

7. Pressure Retaining Pieces

	Serial No. or Identification	Material Specification Incl. Type or Grade
Body	12.27.8 s/n 1	SA 352 LCB
Bonnet or Yoke	08.47.8 s/n 3	SA 352 LCB
Support Rods		
Nozzle	AJW 135	SA 350 LF2
* Disc	51.09.9 s/n 2A	SA 351 CF3A
Spring Washers	26.30.95 s/n 128	45 Cr Mo V 67
Adjusting Screw	ASB 108/CBA 016	SA 182 F 316
* Spindle	APG 015	A 564-74 type 630 cond. H1100
Spring		
* Bolting	ANY/ANZ/AVS/AJS/APA/APB/	SA 193-B7/SA 194-7/SA 194-2H
~~Other Pieces~~ Liner	CAL/AJK/AUY	
Cover	61.4.08 s/n 2	SA 351 CF3A
Vent. Pipe	55.23.8 s/n 10	SA 351 CF8M
Flanges	AKE 144	SA 105
	ASA 039/ASA 198	SA 105

Max. outside diam. valve body : 480 mm (18.90)

Max. outside length valve : 1645 mm (64.77)

* Supplemental sheets in form of lists, sketches or drawings may be used provided (1) size is 8-1/2" × 11", (2) information in Items 1-2 on this Data Report is included on each sheet, and (3) each sheet is numbered and number of sheets is recorded at top of this form.

0/77) This form (E00042) may be obtained from the Order Dept., ASME, 345 E. 47th St., New York, N.Y. 10017

FORM NV-1 (Back)

CERTIFICATE OF COMPLIANCE

We certify that the statements made in this report are correct and that this valve conforms to the rules of construction of the ASME Code for Nuclear Power Plant Components, Section III, Div. 1., 1974 Edition, Addenda sum. '76 (Date), Code Case No. N.A.

Date 81.07.03 Signed G. Dikkers & Co NV (N Certificate Holder) by J. Pirobber

Our ASME Certificate of Authorization No. 1806 to use the NV (NV) symbol expires 1st. July 1980 (Date)

CERTIFICATION OF DESIGN

Design information on file at General Electric and Perry I+II spares

Stress analysis report (Class 1 only) on file at General Electric and Perry I+II spares

Design specifications certified by[1] Boyd P. Brooks

PE State California Reg. No. 13655

Stress report certified by[1] Robert L. Weiss

PE State California/Illinois Reg. No. N 14921/62-25749

[1] Signature not required—list name only.

CERTIFICATE OF SHOP INSPECTION

I, the undersigned, holding a valid commission issued by the National Board of Boiler and Pressure Vessel Inspectors and the State or Province of Ontario (Canada) and employed by Royal Indemnety Co. of ~~New York~~ have inspected the pump, or valve, described in this Data Report on 26 September, 19 79 and state that to the best of my knowledge and belief, the N Certificate Holder has constructed this pump, or valve, in accordance with the ASME Code for Nuclear Power Plant Components.

By signing this certificate, neither the Inspector nor his employer makes any warrant, expressed or implied, concerning the equipment described in this Data Report. Furthermore, neither the Inspector nor his employer shall be liable in any manner for any personal injury or property damage or a loss of any kind arising from or connected with this Inspection.

Date 7 July, 19 81

Signed (Inspector) Commissions N.B. 6653 (Nat'l. Bd., State Prov. and No.)

1B21-339

NIS-2/NR-1 OWNER'S REPORT FOR REPAIRS OR REPLACEMENTS

As required by the Provisions of the ASME Code Section XI

PNPP No. 9308 Rev. 9/11/00 NQI-1741

1. Owner: FIRSTENERGY CORP.
10 Center Road, Perry, Ohio 44081
Date 6-20-03
Sheet 1 of 2

2. Plant: Perry Nuclear Power Plant (PNPP)
10 Center Road, Perry, Ohio 44081
Unit ONE
WO 01-17338-000,001 R/0
(Repair Org. P.O. No., etc.)

3. Work Performed By: FIRSTENERGY Nuclear Operating Company PNPP
10 Center Road, Perry, Ohio 44081
Type Code Symbol Stamp NR
Authorization No. 33
Expiration Date 9-26-05

4. Identification of System: 1B21 NUCLEAR BOILER PROCESS INSTRUMENTATION

5. (a) Applicable Construction Code: ASME SECTION III NB (NAME/SECTION/DIVISION/CLASS), 1974 Edition

WINTER 19 75 Addenda Code Case(s) N224-1,N225,N3,N413,N71-9,N71-11,1644-5 1728, N272.

(b) Construction Code used for repairs, modifications, or replacements: 1974 (Edition) WINTER 75 (Addenda) * (Code Case(s))

(c) ASME Code Section XI applicable for Inservice Inspection: 1989 (Edition) N/A (Addenda) N/A (Code Case(s))

(d) Applicable Edition of Section XI Utilized for Repairs, Modification, or Replacements:

19 89, EDITION 19 N/A Addenda N/A Code Case(s)

(e) Design Responsibilities FIRSTENERGY NUCLEAR OPERATING COMPANY PNPP

6. Identification of Components Repaired, Modified, or Replacement Components

Name of Component	Name of Manufacturer	Manufacturer Serial No.	Nat. Board No.	Other ID.	Year Built	Repair, Replacement, or Modification	ASME Code Stamped
PIPING SYSTEM	GENERAL ELECTRIC	1B21	64084	N/A	1985	REPLACEMENT	YES

7. Description of Work: REMOVED VALVE S/N 160851 AND INSTALLED VALVE S/N 160869 @ 1B21F041F USING (12) NEW 1-5/8-8 NUTS HEAT CODE D284.

8. Test Conducted: Hydrostatic- ☐ Pneumatic- ☐ Nominal Operating Pressure- ☒ Other- ☐

Pressure 1025 psi Test Temperature 130 degrees F Code Case(s) N/A

NIS-2/NR-1 OWNER'S REPORT FOR REPAIRS OR REPLACEMENTS (Back)

PNPP No. 9308 Rev. 9/11/00 NQI-1741

9. Remarks: _____

NO NAMEPLATE/STAMPING PERFORMED DUE TO THE INTERFACE CONTROLS OF RA-2370 BEING IN EFFECT AND JURISDICTIONAL AUTHORITY CONCURRENCE HAVING BEEN RECEIVED.

Note: Attach all applicable Manufacturer's Data Reports. Supplemental sheets such as lists, sketches, or drawings may be used, provided (1) size is 8 1/2 in. x 11 in., (2) information in items 1 through 6 of this report is included on each sheet, and (3) each sheet is numbered and the number of sheets is recorded on the front of this form.

CERTIFICATE OF COMPLIANCE

I, JOHN W. MESSENGER, certify that to the best of my knowledge and belief the statements made in this report are correct and the repair, modification or replacement of the items described above conforms to Section XI of the ASME Code and to the National Board Inspection Code "NR" rules.

National Board Certificate of Authorization No. 33 to use the "NR stamp expires SEPT. 26, 20 05

Date JUNE 20, 20 03 Signed FENOC-PNPP (name of repair organization) [signature] (authorized representative) QE (title)

CERTIFICATE OF INSPECTION/INSERVICE INSPECTION

I, THOMAS G. LAPS, holding a valid commission issued by The National Board of Boiler and Pressure Vessel Inspectors and certificate of competency issued by the jurisdiction of OHIO and employed by H.S.B. CT. of HARTFORD, CONN. have inspected the repair, modification or replacement described in this report on JUNE 30, 2003 and state that to the best of my knowledge and belief, this repair, modification or replacement has been completed in accordance with Section XI of the ASME Code and the National Board Inspection Code "NR" rules.

By signing this certificate, neither the undersigned nor my employer makes any warranty, expressed or implied, concerning the work described in this report. Furthermore, neither the undersigned nor my employer shall be liable in any manner for any personal injury, property damage or loss of any kind arising from or connected with this inspection.

Date JUNE 30, 20 03 Signed Thomas G. Laps (inspector) Commissions NB9330 N I A OHIO CONN. (National Board (include endorsements), and jurisdiction, and no.)

FORM NV-1 N CERTIFICATE HOLDERS' DATA REPORT FOR SAFETY AND SAFETY RELIEF VALVES*

As Required by the Provisions of the ASME Code, Section III, Div. I

1B21-339 pg 2 of 2

1 Manufactured by C. Dikkers & Co. N.V. (0) The Netherlands
(Name and Address of N Certificate Holder)

2 Manufactured for General Electric San Jose Calif.
(Name and Address of Purchaser or Owner)

3 Location of Installation Perry II North Perry Ohio
(Name and Address)

4. (CRN) G171-6/125.04.03 rev.06 (Drawing No.) 67 (Nat'l Brd No.) (Year Built)

5. Valve G171 (Model No., Series No.) Identifying Nos. 160869 (N Certificate Holder's Serial No.) 1979

Type safety/relief
Safety, Safety Relief, Pilot, Power Actuated

Orifice Size 4.84" inch Nominal Inlet Size 8" inch Outlet Size 10" inch

6. Set Pressure (PSIG) 1165 Rated Temperature 585 °F

Stamped Capacity 905732 lbs/hr @ 3 % Overpressure Blowdown (PSIG) 33.8
Sat Steam

Hydrostatic Test (PSIG) Inlet 2350 Outlet 975
(Applicable to valves for closed systems only)

7. Pressure Retaining Pieces

	Serial No. or Identification	Material Specification Incl. Type or Grade
Body	13.21.8 SN 4	SA 352 LGB*
Bonnet or Yoke	05.12.8 SN 3	SA 352 LGB
Support Rods+		
Nozzle	AJW 025	SA 350 LF2
Disc	54.30.8 - 8A	SA 351 CF3A
Spring Washers	26.30.95 - 69	45 Cr Mo V 67
Adjusting Screw	AFU 031 AFU 020	SA 182 F 316
Spindle	AJE 029	A 564-74 type 630 cond. HI 100
Spring+		
Bolting	ANY/AYE/AVS/AER/AWZ	SA 193-B7/SA 194-7/SA 194-2H
Other Pieces	AMR/AJM/AJL/AJJ	
Liner	59.36.8 SN 2	SA 351 CF3A
Cover	56.12.8 SN 6	SA 351 CF8M
Vent pipe	AKE 061	SA 105
Flanges	AFV 016 AKF 012	SA 105

Max. outside diam. valve body 479 mm. (18,86)"

Max. outside length valve 1642 mm. (64,64)"

* Supplemental sheets in form of lists, sketches or drawings may be used provided (1) size is 8-1/2" × 11", (2) information in items 1-2 on this Data Report is included on each sheet, and (3) each sheet is numbered and number of sheets is recorded at top of this form.

(10/77) This form (E00042) may be obtained from the Order Dept., ASME, 345 E. 47th St., New York, N.Y. 10017

FORM NV-1 (Back)

CERTIFICATE OF COMPLIANCE

We certify that the statements made in this report are correct and that this valve conforms to the rules of construction of the ASME Code for Nuclear Power Plant Components, Section III, Div. 1, 1974 Edition, Addenda Sum. '76 (Date), Code Case No.

Date 19.79 03-12 Signed Dikkers & Co. N.V. (N Certificate Holder) by W. Willems

Our ASME Certificate of Authorization No 1806 to use the NV (NV) symbol expires 1st July, 1980 (Date)

CERTIFICATION OF DESIGN

Design information on file at General Electric and Perry II

Stress analysis report (Class 1 only) on file at General Electric and Perry II

Design specifications certified by[1] Boyd P. Brooks

PE State California Reg No. 13655

Stress report certified by[1] Robert L. Weiss

PE State California/Illinois Reg No M14921/62-25749

[1] Signature not required—list name only

CERTIFICATE OF SHOP INSPECTION

I, the undersigned, holding a valid commission issued by the National Board of Boiler and Pressure Vessel Inspectors and the State or Province of Ohio and employed by Kemper Ins. of Long Grove Ill. have inspected the pump, or valve, described in this Data Report on 12 March 19 79 and state that to the best of my knowledge and belief, the N Certificate Holder has constructed this pump, or valve, in accordance with the ASME Code for Nuclear Power Plant Components.

By signing this certificate, neither the Inspector nor his employer makes any warrant, expressed or implied, concerning the equipment described in this Data Report. Furthermore, neither the Inspector nor his employer shall be liable in any manner for any personal injury or property damage or a loss of any kind arising from or connected with this inspection.

Date 3-12 19 79

Signed (Inspector) Commissions NB 4456 (Nat'l Bd., State Prov. and No.)

1B21-340

NIS-2/NR-1 OWNER'S REPORT FOR REPAIRS OR REPLACEMENTS

As required by the Provisions of the ASME Code Section XI

PNPP No. 9308 Rev. 9/11/00 NQI-1741

1. Owner: FIRSTENERGY CORP. Date 6-20-03
10 Center Road, Perry, Ohio 44081 Sheet 1 of 2

2. Plant: Perry Nuclear Power Plant (PNPP) Unit ONE
10 Center Road, Perry, Ohio 44081 WO 01-17341-000,001 R/0
(Repair Org. P.O. No., etc.)

3. Work Performed By: FIRSTENERGY Nuclear Operating Company PNPP Type Code Symbol Stamp NR
10 Center Road, Perry, Ohio 44081 Authorization No. 33
Expiration Date 9-26-05

4. Identification of System: 1B21 NUCLEAR BOILER PROCESS INSTRUMENTATION

5. (a) Applicable Construction Code: ASME SECTION III NB ,1974 Edition
NAME/SECTION/DIVISION/CLASS

WINTER 19 75 Addenda Code Case(s) N224-1,N225,N3,N413,N71-9,N71-11,1644-5 1728, N272.

(b) Construction Code used for repairs, modifications, or replacements: 1974 (Edition) WINTER 75 (Addenda) * (Code Case(s))

(c) ASME Code Section XI applicable for Inservice Inspection: 1989 (Edition) N/A (Addenda) N/A (Code Case(s))

(d) Applicable Edition of Section XI Utilized for Repairs, Modification, or Replacements:
19 89 , EDITION 19 N/A Addenda N/A
Code Case(s)

(e) Design Responsibilities FIRSTENERGY NUCLEAR OPERATING COMPANY PNPP

6. Identification of Components Repaired, Modified, or Replacement Components

Name of Component	Name of Manufacturer	Manufacturer Serial No.	Nat. Board No.	Other ID.	Year Built	Repair, Replacement, or Modification	ASME Code Stamped
PIPING SYSTEM	GENERAL ELECTRIC	1B21	64084	N/A	1985	REPLACEMENT	YES

7. Description of Work: REMOVED VALVE S/N 160888 AND INSTALLED VALVE S/N 160889 @ 1B21F041K USING (1) NEW 1-5/8-8 INLET STUDS HEAT CODE Z4K ,AND (12) NEW 1-5/8-8 NUTS HEAT CODE (2) TCD AND (10) SVX .

8. Test Conducted: Hydrostatic- ☐ Pneumatic- ☐ Nominal Operating Pressure- ☒ Other- ☐
Pressure 1025 psi Test Temperature 130 degrees F Code Case(s) N/A

NIS-2/NR-1 OWNER'S REPORT FOR REPAIRS OR REPLACEMENTS (Back)

PNPP No. 9308 Rev. 9/11/00 NQI-1741

9. Remarks:

NO NAMEPLATE/STAMPING PERFORMED DUE TO THE INTERFACE CONTROLS OF RA-2370 BEING IN EFFECT AND JURISDICTIONAL AUTHORITY CONCURRENCE HAVING BEEN RECEIVED.

Note: Attach all applicable Manufacturer's Data Reports. Supplemental sheets such as lists, sketches, or drawings may be used, provided (1) size is 8 1/2 in. x 11 in., (2) information in items 1 through 6 of this report is included on each sheet, and (3) each sheet is numbered and the number of sheets is recorded on the front of this form.

CERTIFICATE OF COMPLIANCE

I, JOHN W. MESSENGER, certify that to the best of my knowledge and belief the statements made in this report are correct and the repair, modification or replacement of the items described above conforms to Section XI of the ASME Code and to the National Board Inspection Code "NR" rules.

National Board Certificate of Authorization No. 33 to use the "NR stamp expires SEPT. 26, 20 05

Date JUNE 20, 20 03 Signed FENOC-PNPP (name of repair organization) (authorized representative) QE (title)

CERTIFICATE OF INSPECTION/INSERVICE INSPECTION

I, THOMAS G. LAPS, holding a valid commission issued by The National Board of Boiler and Pressure Vessel Inspectors and certificate of competency issued by the jurisdiction of OHIO and employed by HSB Ct. of HARTFORD, CONN. have inspected the repair, modification or replacement described in this report on JUNE 30 20 03 and state that to the best of my knowledge and belief, this repair, modification or replacement has been completed in accordance with Section XI of the ASME Code and the National Board Inspection Code "NR" rules.

By signing this certificate, neither the undersigned nor my employer makes any warranty, expressed or implied, concerning the work described in this report. Furthermore, neither the undersigned nor my employer shall be liable in any manner for any personal injury, property damage or loss of any kind arising from or connected with this inspection.

Date JUNE 30 20 03 Signed Thomas G. Laps (inspector) Commissions NB 9330 NIA OHIO CONN (National Board (include endorsements), and jurisdiction, and no.)

x corrected report

1B21-340 09 2 of 2

FORM NV-1 N CERTIFICATE HOLDERS' DATA REPORT FOR SAFETY AND SAFETY RELIEF VALVES*

As Required by the Provisions of the ASME Code, Section III, Div. I

1. Manufactured by G. Dikkers & Co. NV. Hengelo (O) The Netherlands
(Name and Address of N Certificate Holder)

Manufactured for General Electric, San Jose, California
(Name and Address of Purchaser or Owner)

3. Location of Installation Perry I+II spares North Perry Ohio
(Name and Address)

G 471-6/125.04.03 rev. 6 142 1979
(CRN) (Drawing No.) (Nat'l. Brd. No.) (Year Built)

5. Valve G471 Identifying Nos. 160889
(Model No., Series No.) (N Certificate Holder's Serial No.)

Type Safety/Relief
Safety, Safety Relief, Pilot, Power Actuated

Orifice Size 4.84 inch Nominal Inlet Size 8" (Flanges) inch Outlet Size 10" inch

6. Set Pressure (PSIG) 1165 Rated Temperature 585 °F

Stamped Capacity 905732 lbs/hr @ 2350 % Overpressure Blowdown (PSIG) 44.53
Set Steam

Hydrostatic Test (PSIG) Inlet Outlet 975
(Applicable to valves for closed systems only)

7. Pressure Retaining Pieces

	Serial No. or Identification	Material Specification Incl. Type or Grade
✓ Body	03.21.8.s/n 2	SA 352 LCB
Bonnet or Yoke	06.04.8 s/n 4	SA 352 LCB
Support Rods		
Nozzle	AJW 044	SA 350 LF2
Disc	54.07.9 s/n 2A	SA 351 CF3A
* Spring Washers	26.30.95. s/n 141	45 Cr Mo V 67
* Adjusting Screw	CBA 058/ASB 040	SA 182 F 316
Spindle	APG 041	A 564-74 type 630 cond. H1100
Spring		
* Bolting	ANY/ANZ/AVS/AJS/APA/APB/ANZ	SA 193-B7/SA 194-7/SA 194-2H
Other Pieces	CAL/ALR/AUY	
Liner	58.35.8 s/n 2	SA 351 CF3A
Cover	65.17.8 s/n 2	SA 351 CF8M
Vent. Pipe	AKE 149	SA 105
Flanges	ASA 019/ASA 145	SA 105

Max. outside diam. valve body : 480 mm (18.90)

Max. outside length valve : 1644 mm (64.73)

* Supplemental sheets in form of lists, sketches or drawings may be used provided (1) size is 8-1/2" × 11", (2) information in Items 1-2 on this Data Report is included on each sheet, and (3) each sheet is numbered and number of sheets is recorded at top of this form.

0/77) This form (E00042) may be obtained from the Order Dept., ASME, 345 E. 47th St., New York, N.Y. 10017.

FORM NV-1 (Back)

CERTIFICATE OF COMPLIANCE

We certify that the statements made in this report are correct and that this valve conforms to the rules of construction of the ASME Code for Nuclear Power Plant Components, Section III, Div. 1., 1974 Edition, Addenda Sum. '76 (Date), Code Case No. N.A.

Date 81-07.03 Signed G. Dikkers & Co NV (N Certificate Holder) by J.A. Probbe

Our ASME Certificate of Authorization No. 1806 to use the NV (NV) symbol expires 1st. July 1980 (Date).

CERTIFICATION OF DESIGN

Design information on file at General Electric and Perry I+II spares

Stress analysis report (Class 1 only) on file at General Electric and Perry I+II spares

Design specifications certified by[1] Boyd P. Brooks

PE State California Reg. No. 13655

Stress report certified by[1] Robert L. Weiss

PE State California/Illinois Reg. No. M 14921/62-25749

[1] Signature not required—list name only.

CERTIFICATE OF SHOP INSPECTION

I, the undersigned, holding a valid commission issued by the National Board of Boiler and Pressure Vessel Inspectors and the State or Province of Ontario (Canada) and employed by Royal Indemnity of ~~New York~~ have inspected the pump, or valve, described in this Data Report on ~~25 September~~, 19 79 and state that to the best of my knowledge and belief, the N Certificate Holder has constructed this pump, or valve, in accordance with the ASME Code for Nuclear Power Plant Components.

By signing this certificate, neither the Inspector nor his employer makes any warrant, expressed or implied, concerning the equipment described in this Data Report. Furthermore, neither the Inspector nor his employer shall be liable in any manner for any personal injury or property damage or a loss of any kind arising from or connected with this Inspection.

Date 7th July 19 81.

Signed (Inspector) Commissions N.B. 6653 (Nat'l. Bd., State Prov. and No.)

1B21-341

NIS-2/NR-1 OWNER'S REPORT FOR REPAIRS OR REPLACEMENTS

As required by the Provisions of the ASME Code Section XI

PNPP No. 9308 Rev. 9/11/00 NQI-1741

1. Owner: FIRSTENERGY CORP. Date 6-20-03
10 Center Road, Perry, Ohio 44081 Sheet 1 of 2

2. Plant: Perry Nuclear Power Plant (PNPP) Unit ONE
10 Center Road, Perry, Ohio 44081 WO 01-17345-000,001 R/0
(Repair Org. P.O. No., etc.)

3. Work Performed By: FIRSTENERGY Nuclear Operating Company PNPP Type Code Symbol Stamp NR
10 Center Road, Perry, Ohio 44081 Authorization No. 33
Expiration Date 9-26-05

4. Identification of System: 1B21 NUCLEAR BOILER PROCESS INSTRUMENTATION

5. (a) Applicable Construction Code: ASME SECTION III NB ,1974 Edition
NAME/SECTION/DIVISION/CLASS

WINTER 19 75 Addenda Code Case(s) N224-1,N225,N3,N413,N71-9,N71-11,1644-5
1728, N272.

(b) Construction Code used for repairs, modifications, or replacements: 1974 (Edition) WINTER 75 (Addenda) * (Code Case(s))

(c) ASME Code Section XI applicable for Inservice Inspection: 1989 (Edition) N/A (Addenda) N/A (Code Case(s))

(d) Applicable Edition of Section XI Utilized for Repairs, Modification, or Replacements:
19 89 , EDITION 19 N/A Addenda N/A
Code Case(s)

(e) Design Responsibilities FIRSTENERGY NUCLEAR OPERATING COMPANY PNPP

6. Identification of Components Repaired, Modified, or Replacement Components

Name of Component	Name of Manufacturer	Manufacturer Serial No.	Nat. Board No.	Other ID.	Year Built	Repair, Replacement, or Modification	ASME Code Stamped
PIPING SYSTEM	GENERAL ELECTRIC	1B21	64084	N/A	1985	REPLACEMENT	YES

7. Description of Work: REMOVED VALVE S/N 160853 AND INSTALLED VALVE S/N 160891 @ 1B21F047B USING (12) NEW 1-5/8-8 NUTS HEAT CODE D284.

8. Test Conducted: Hydrostatic- ☐ Pneumatic- ☐ Nominal Operating Pressure- ☒ Other- ☐
Pressure 1025 psi Test Temperature 130 degrees F Code Case(s) N/A

NIS-2/NR-1 OWNER'S REPORT FOR REPAIRS OR REPLACEMENTS (Back)

PNPP No. 9308 Rev. 9/11/00 NQI-1741

9. Remarks:

NO NAMEPLATE/STAMPING PERFORMED DUE TO THE INTERFACE CONTROLS OF RA-2370 BEING IN EFFECT AND JURISDICTIONAL AUTHORITY CONCURRENCE HAVING BEEN RECEIVED.

Note: Attach all applicable Manufacturer's Data Reports. Supplemental sheets such as lists, sketches, or drawings may be used, provided (1) size is 8 1/2 in. x 11 in., (2) information in items 1 through 6 of this report is included on each sheet, and (3) each sheet is numbered and the number of sheets is recorded on the front of this form.

CERTIFICATE OF COMPLIANCE

I, JOHN W. MESSENGER, certify that to the best of my knowledge and belief the statements made in this report are correct and the repair, modification or replacement of the items described above conforms to Section XI of the ASME Code and to the National Board Inspection Code "NR" rules.

National Board Certificate of Authorization No. 33 to use the "NR stamp expires SEPT. 26, 20 05

Date JUNE 20, 20 03 Signed FENOC-PNPP (name of repair organization) (authorized representative) QE (title)

CERTIFICATE OF INSPECTION/INSERVICE INSPECTION

I, THOMAS G. LAPS, holding a valid commission issued by The National Board of Boiler and Pressure Vessel Inspectors and certificate of competency issued by the jurisdiction of OHIO and employed by HSB CT. of HARTFORD, CONN have inspected the repair, modification or replacement described in this report on JUNE 30, 20 03 and state that to the best of my knowledge and belief, this repair, modification or replacement has been completed in accordance with Section XI of the ASME Code and the National Board Inspection Code "NR" rules.

By signing this certificate, neither the undersigned nor my employer makes any warranty, expressed or implied, concerning the work described in this report. Furthermore, neither the undersigned nor my employer shall be liable in any manner for any personal injury, property damage or loss of any kind arising from or connected with this inspection.

Date JUNE 30, 20 03 Signed (inspector) Commissions NB 9330 NIA OHIO COMM. (National Board (include endorsements), and jurisdiction, and no.)

1B21-341 Pg 2 of 2 * Corrected report

FORM NV-1 N CERTIFICATE HOLDERS' DATA REPORT FOR SAFETY AND SAFETY RELIEF VALVES*

As Required by the Provisions of the ASME Code, Section III, Div. I

1. Manufactured by G. Dikkers & Co. NV. Hengelo (O) The Netherlands
(Name and Address of N Certificate Holder)

2. Manufactured for General Electric, San Jose, California
(Name and Address of Purchaser or Owner)

Location of Installation Perry I + II spares North Perry Ohio
(Name and Address)

4. N/A (CRN) G 471-6/125.04.03 rev. 6 (Drawing No.) 148 (Nat'l. Brd. No.) 1979 (Year Built)

5. Valve G471 (Model No., Series No.) Identifying Nos. 160891 (N Certificate Holder's Serial No.)

Type Safety/Relief
Safety, Safety Relief; Pilot; Power Actuated

Orifice Size 4.84 inch Nominal Inlet Size 8" (Flange) inch Outlet Size 10" inch

6. Set Pressure (PSIG) 1180 Rated Temperature 585 °F

Stamped Capacity 917253 Sat. Steam lbs/hr @ 2350 % Overpressure Blowdown (PSIG) 111.85 975

Hydrostatic Test (PSIG) Inlet Outlet
(Applicable to valves for closed systems only)

7. Pressure Retaining Pieces

	Serial No. or Identification	Material Specification Incl. Type or Grade
Body	12.22.8	SA 352 LCB
Bonnet or Yoke	04.36.8	SA 352 LCB
Support Rods		
Nozzle	AJW 089	SA 350 LF2
Disc	60.07.9 s/n 1A	SA 351 CF3A
Spring Washers	26.30.95 s/n 152	45 Cr Mo V 67
Adjusting Screw	CBA 030 CBA 003	SA 182 F 316
Spindle	CAD 013	A 564-74 type 630 cond. H1100
Spring		
Bolting	ANY/ANZ/AVS/AJS/APA/APB/ANZ	SA 193-B7/SA 194-7/SA 194-2H
~~Other Pieces~~	CAL/ALR/AUY	
Liner	57.06.9 s/n 2	SA 351 CF3A
Cover	63.38.8 s/n 3	SA 351 CF8M
Vent. Pipe	AWB 049	SA 105
Flanges	AKF 039 AKF 060	SA 105

Max. outside diam. valve body 478 mm (18.82)

Max. outside length valve 1645 mm (64.77)

* Supplemental sheets in form of lists, sketches or drawings may be used provided (1) size is 8-1/2" × 11", (2) information in Items 1-2 on this Data Report is included on each sheet, and (3) each sheet is numbered and number of sheets is recorded at top of this form.

(10/77) This form (E00042) may be obtained from the Order Dept., ASME, 345 E. 47th St., New York, N.Y. 10017

FORM NV-1 (Back)

CERTIFICATE OF COMPLIANCE

We certify that the statements made in this report are correct and that this valve conforms to the rules of construction of the ASME Code for Nuclear Power Plant Components, Section III, Div. 1., 1974 Edition, Addenda Sum. '76 (Date), Code Case No. N.A.

Date 81.07.01 Signed G. Dikkers & Co NV (N Certificate Holder) by [signature]

Our ASME Certificate of Authorization No. 1806 to use the NV (NV) symbol expires 1st. July 1980 (Date)

CERTIFICATION OF DESIGN

Design information on file at General Electric and Perry I + II spares

Stress analysis report (Class 1 only) on file at General Electric and Perry I + II spares

Design specifications certified by[1] Boyd P. Brooks

PE State California Reg. No. 13655

Stress report certified by[1] Robert L. Weiss

PE State California/Illinois Reg. No. M I4921/62-25749

[1] Signature not required—list name only.

CERTIFICATE OF SHOP INSPECTION

I, the undersigned, holding a valid commission issued by the National Board of Boiler and Pressure Vessel Inspectors and the State or Province of Ontario (Canada) and employed by Royal Indemnity Co. New York have inspected the pump, or valve described in this Data Report on 26 September, 19 79 and state that to the best of my knowledge and belief, the N Certificate Holder has constructed this pump, or valve, in accordance with the ASME Code for Nuclear Power Plant Components.

By signing this certificate, neither the Inspector nor his employer makes any warrant, expressed or implied, concerning the equipment described in this Data Report. Furthermore, neither the Inspector nor his employer shall be liable in any manner for any personal injury or property damage or a loss of any kind arising from or connected with this Inspection.

Date 7 July 1981

Signed [signature] (Inspector) Commissions N.B. 6653 (Nat'l. Bd., State Prov. and No.)

1B21-342

NIS-2/NR-1 OWNER'S REPORT FOR REPAIRS OR REPLACEMENTS

As required by the Provisions of the ASME Code Section XI

PNPP No. 9308 Rev. 9/11/00 NQI-1741

1. Owner: FIRSTENERGY CORP.
10 Center Road, Perry, Ohio 44081
Date 6-20-03
Sheet 1 of 2

2. Plant: Perry Nuclear Power Plant (PNPP)
10 Center Road, Perry, Ohio 44081
Unit ONE
WO 01-17346-000,001 R/0
(Repair Org. P.O. No., etc.)

3. Work Performed By: FIRSTENERGY Nuclear Operating Company PNPP
10 Center Road, Perry, Ohio 44081
Type Code Symbol Stamp NR
Authorization No. 33
Expiration Date 9-26-05

4. Identification of System: 1B21 NUCLEAR BOILER PROCESS INSTRUMENTATION

5. (a) Applicable Construction Code: ASME SECTION III NB ,1974 Edition
NAME/SECTION/DIVISION/CLASS

WINTER 19 75 Addenda Code Case(s) N224-1,N225,N3,N413,N71-9,N71-11,1644-5 1728, N272.

(b) Construction Code used for repairs, modifications, or replacements: 1974 (Edition) WINTER 75 (Addenda) * (Code Case(s))

(c) ASME Code Section XI applicable for Inservice Inspection: 1989 (Edition) N/A (Addenda) N/A (Code Case(s))

(d) Applicable Edition of Section XI Utilized for Repairs, Modification, or Replacements:
19 89 , EDITION 19 N/A Addenda N/A Code Case(s)

(e) Design Responsibilities FIRSTENERGY NUCLEAR OPERATING COMPANY PNPP

6. Identification of Components Repaired, Modified, or Replacement Components

Name of Component	Name of Manufacturer	Manufacturer Serial No.	Nat. Board No.	Other ID.	Year Built	Repair, Replacement, or Modification	ASME Code Stamped
PIPING SYSTEM	GENERAL ELECTRIC	1B21	64084	N/A	1985	REPLACEMENT	YES

7. Description of Work: REMOVED VALVE S/N 160894 AND INSTALLED VALVE S/N 160890 @ 1B21F047D USING (12) NEW 1-5/8-8 NUTS HEAT CODE (1) D284 AND (11) SVX.

8. Test Conducted: Hydrostatic- ☐ Pneumatic- ☐ Nominal Operating Pressure- ☒ Other- ☐
Pressure 1025 psi Test Temperature 130 degrees F Code Case(s) N/A

NIS-2/NR-1 OWNER'S REPORT FOR REPAIRS OR REPLACEMENTS (Back)

PNPP No. 9308 Rev. 9/11/00 NQI-1741

9. Remarks:

NO NAMEPLATE/STAMPING PERFORMED DUE TO THE INTERFACE CONTROLS OF RA-2370 BEING IN EFFECT AND JURISDICTIONAL AUTHORITY CONCURRENCE HAVING BEEN RECEIVED.

Note: Attach all applicable Manufacturer's Data Reports. Supplemental sheets such as lists, sketches, or drawings may be used, provided (1) size is 8 1/2 in. x 11 in., (2) information in items 1 through 6 of this report is included on each sheet, and (3) each sheet is numbered and the number of sheets is recorded on the front of this form.

CERTIFICATE OF COMPLIANCE

I, JOHN W. MESSENGER, certify that to the best of my knowledge and belief the statements made in this report are correct and the repair, modification or replacement of the items described above conforms to Section XI of the ASME Code and to the National Board Inspection Code "NR" rules.

National Board Certificate of Authorization No. 33 to use the "NR stamp expires SEPT. 26, 20 05

Date JUNE 20, 20 03 Signed FENOC-PNPP (name of repair organization) (authorized representative) QE (title)

CERTIFICATE OF INSPECTION/INSERVICE INSPECTION

I, THOMAS G. LAPS, holding a valid commission issued by The National Board of Boiler and Pressure Vessel Inspectors and certificate of competency issued by the jurisdiction of OHIO and employed by HSB CT. of HARTFORD, CONN. have inspected the repair, modification or replacement described in this report on June 30 20 03 and state that to the best of my knowledge and belief, this repair, modification or replacement has been completed in accordance with Section XI of the ASME Code and the National Board Inspection Code "NR" rules.

By signing this certificate, neither the undersigned nor my employer makes any warranty, expressed or implied, concerning the work described in this report. Furthermore, neither the undersigned nor my employer shall be liable in any manner for any personal injury, property damage or loss of any kind arising from or connected with this inspection.

Date June 30, 20 03 Signed (inspector) Commissions NB 9330 N I A OHIO CONN (National Board (include endorsements), and jurisdiction, and no.)

1B21-342 PAGE 2 OF 2

FORM NV-1 N CERTIFICATE HOLDERS' DATA REPORT FOR SAFETY AND SAFETY RELIEF VALVES*

As Required by the Provisions of the ASME Code, Section III, Div. I

1. Manufactured by G. Dikkers & Co. NV. Hengelo (O) The Netherlands
(Name and Address of N Certificate Holder)

2. Manufactured for General Electric, San Jose, California
(Name and Address of Purchaser or Owner)

3. Location of Installation Perry I+II spares North Perry Ohio
(Name and Address)

G 471-6/125.04.03 rev. 6 — (CRN) — G471 (Drawing No.) — 147 (Nat'l. Brd. No.) — 1979 (Year Built)

5. Valve _____ (Model No., Series No.) Identifying Nos. 160890 (N Certificate Holder's Serial No.)

Type Safety/Relief
Safety, Safety Relief, Pilot, Power Actuated

Orifice Size 4,84 inch Nominal Inlet Size 8" (Flanges) inch Outlet Size 10" inch

6. Set Pressure (PSIG) 1180 Rated Temperature 585 °F

Stamped Capacity 917253 lbs/hr (Sat. Steam) @ 2350 % Overpressure Blowdown (PSIG) 106,12

Hydrostatic Test (PSIG) Inlet _____ Outlet 975
(Applicable to valves for closed systems only)

7. Pressure Retaining Pieces

	Serial No. or Identification	Material Specification Incl. Type or Grade
Body	01.13.8	SA 352 LCB
Bonnet or Yoke	02.34.8.s/n 2	SA 352 LCB
Support Rods		
Nozzle	AJW 087	SA 350 LF2
Disc	54.07.9 s/n 1A	SA 351 CF3A
Spring Washers	26.30.95 s/n 150	45 Cr Mo V 67
Adjusting Screw	CBA 042/ASB 049	SA 182 F 316
Spindle	CAD 018	A 564-74 type 630 cond. H1100
Spring		
* Bolting	ANY/ANZ/AVS/AJS/APA/APB/ANZ	SA 193-B7/SA 194-7/SA 194-2H
Other Pieces	CAL/ALR/AUR	
Liner	59.39.8 s/n 2	SA 351 CF3A
Cover	61.46.7 s/n 9	SA 351 CF8M
Vent. Pipe	AKE 143	SA 105
Flanges	ASA 090/ASA 192	SA 105

Max. outside diam. valve body: 480 mm (18.90)

Max. outside length valve : 1646 mm. (64.80)

* Supplemental sheets in form of lists, sketches or drawings may be used provided (1) size is 8-1/2" × 11", (2) information in Items 1-2 on this Data Report is included on each sheet, and (3) each sheet is numbered and number of sheets is recorded at top of this form.

FORM NV-1 (Back)

CERTIFICATE OF COMPLIANCE

We certify that the statements made in this report are correct and that this valve conforms to the rules of construction of the ASME Code for Nuclear Power Plant Components, Section III, Div. 1., 1974 Edition, Addenda Sum. '76 (Date)
Code Case No. N.A.

Date 81-07-03 Signed G. Dikkers & Co NV (N Certificate Holder) by [signature]

Our ASME Certificate of Authorization No. 1806 to use the NV (NV) symbol expires 1st. July 1980 (Date)

CERTIFICATION OF DESIGN

Design information on file at General Electric and Perry I +II spares
Stress analysis report (Class 1 only) on file at General Electric and Perry I +II spares

Design specifications certified by[1] Boyd P. Brooks
PE State California Reg. No. 13655
Stress report certified by[1] Robert L. Weiss
State California/Illinois Reg. No. M 14921/62-25749

[1] Signature not required—list name only.

CERTIFICATE OF SHOP INSPECTION

I, the undersigned, holding a valid commission issued by the National Board of Boiler and Pressure Vessel Inspectors and the State or Province of Ontario (Canada) and employed by Royal Indemnity of New York have inspected the pump, or valve, described in this Data Report on 26 September, 19 79 and state that to the best of my knowledge and belief, the N Certificate Holder has constructed this pump, or valve, in accordance with the ASME Code for Nuclear Power Plant Components.

By signing this certificate, neither the Inspector nor his employer makes any warrant, expressed or implied, concerning the equipment described in this Data Report. Furthermore, neither the Inspector nor his employer shall be liable in any manner for any personal injury or property damage or a loss of any kind arising from or connected with this inspection.

Date 7-July, 19 81.
Signed [signature] (Inspector) Commissions N.B 6653 (Nat'l. Bd., State Prov. and No.)

1B21-343

NIS-2/NR-1 OWNER'S REPORT FOR REPAIRS OR REPLACEMENTS

As required by the Provisions of the ASME Code Section XI

PNPP No. 9308 Rev. 9/11/00 NQI-1741

1. Owner: FIRSTENERGY CORP. Date 6-20-03
10 Center Road, Perry, Ohio 44081 Sheet 1 of 2

2. Plant: Perry Nuclear Power Plant (PNPP) Unit ONE
10 Center Road, Perry, Ohio 44081 WO 01-17349-000,001 R/0
(Repair Org. P.O. No., etc.)

3. Work Performed By: FIRSTENERGY Nuclear Operating Company PNPP Type Code Symbol Stamp NR
10 Center Road, Perry, Ohio 44081 Authorization No. 33
Expiration Date 9-26-05

4. Identification of System: 1B21 NUCLEAR BOILER PROCESS INSTRUMENTATION

5. (a) Applicable Construction Code: ASME SECTION III NB ,1974 Edition
NAME/SECTION/DIVISION/CLASS

WINTER 19 75 Addenda Code Case(s) N224-1,N225,N3,N413,N71-9,N71-11,1644-5 1728, N272.

(b) Construction Code used for repairs, modifications, or replacements: 1974 (Edition) WINTER 75 (Addenda) * (Code Case(s))

(c) ASME Code Section XI applicable for Inservice Inspection: 1989 (Edition) N/A (Addenda) N/A (Code Case(s))

(d) Applicable Edition of Section XI Utilized for Repairs, Modification, or Replacements:

19 89 , EDITION 19 N/A Addenda N/A
Code Case(s)

(e) Design Responsibilities FIRSTENERGY NUCLEAR OPERATING COMPANY PNPP

6. Identification of Components Repaired, Modified, or Replacement Components

Name of Component	Name of Manufacturer	Manufacturer Serial No.	Nat. Board No.	Other ID.	Year Built	Repair, Replacement, or Modification	ASME Code Stamped
PIPING SYSTEM	GENERAL ELECTRIC	1B21	64084	N/A	1985	REPLACEMENT	YES

7. Description of Work: REMOVED VALVE S/N 160856 AND INSTALLED VALVE S/N 160873 @ 1B21F047F INSTALLED (3) NEW 1-5/8-8 STUDS HEAT CODE Z4K AND (12) NEW 1-5/8-8 NUTS HEAT CODE D284.

8. Test Conducted: Hydrostatic- ☐ Pneumatic- ☐ Nominal Operating Pressure- ☒ Other- ☐
Pressure 1025 psi Test Temperature 130 degrees F Code Case(s) N/A

NIS-2/NR-1 OWNER'S REPORT FOR REPAIRS OR REPLACEMENTS (Back)

PNPP No. 9308 Rev. 9/11/00 NQI-1741

9. Remarks:

NO NAMEPLATE/STAMPING PERFORMED DUE TO THE INTERFACE CONTROLS OF RA-2370 BEING IN EFFECT AND JURISDICTIONAL AUTHORITY CONCURRENCE HAVING BEEN RECEIVED.

Note: Attach all applicable Manufacturer's Data Reports. Supplemental sheets such as lists, sketches, or drawings may be used, provided (1) size is 8 1/2 in. x 11 in., (2) information in items 1 through 6 of this report is included on each sheet, and (3) each sheet is numbered and the number of sheets is recorded on the front of this form.

CERTIFICATE OF COMPLIANCE

I, JOHN W. MESSENGER, certify that to the best of my knowledge and belief the statements made in this report are correct and the repair, modification or replacement of the items described above conforms to Section XI of the ASME Code and to the National Board Inspection Code "NR" rules.

National Board Certificate of Authorization No. 33 to use the "NR stamp expires SEPT. 26, 20 05

Date JUNE 20, 20 03 Signed FENOC-PNPP (name of repair organization) (authorized representative) QE (title)

CERTIFICATE OF INSPECTION/INSERVICE INSPECTION

I, THOMAS G. LAPS, holding a valid commission issued by The National Board of Boiler and Pressure Vessel Inspectors and certificate of competency issued by the jurisdiction of OHIO and employed by HSB CT. of HARTFORD, CONN. have inspected the repair, modification or replacement described in this report on July 9, 2003 and state that to the best of my knowledge and belief, this repair, modification or replacement has been completed in accordance with Section XI of the ASME Code and the National Board Inspection Code "NR" rules.

By signing this certificate, neither the undersigned nor my employer makes any warranty, expressed or implied, concerning the work described in this report. Furthermore, neither the undersigned nor my employer shall be liable in any manner for any personal injury, property damage or loss of any kind arising from or connected with this inspection.

Date July 9, 20 03 Signed (inspector) Commissions NB9330 N I A CONN OHIO (National Board (include endorsements), and jurisdiction, and no.)

1B21-343 page 2 of 2 3 * Corrected report

FORM NV-1 N CERTIFICATE HOLDERS' DATA REPORT FOR SAFETY AND SAFETY RELIEF VALVES*

As Required by the Provisions of the ASME Code, Section III, Div. I

1. Manufactured by G. Dikkers & Co. NV, Hengelo (O) The Netherlands
(Name and Address of N Certificate Holder)
2. Manufactured for General Electric, San Jose, California
(Name and Address of Purchaser or Owner)
3. Location of Installation Perry II North Perry Ohio
(Name and Address)
4. (CRN) G 471-6/125.04.03 rev. 6 (Drawing No.) 81 (Nat'l. Brd. No.) 1979 (Year Built)
5. Valve G471 (Model No., Series No.) Identifying Nos. 160873 (N Certificate Holder's Serial No.)
Type Safety/Relief
Safety, Safety Relief, Pilot, Power Actuated
Orifice Size 4,84" inch Nominal Inlet Size 8" inch Outlet Size 10" inch
6. Set Pressure (PSIG) 1180 Rated Temperature 585 °F
Stamped Capacity 917253 lbs/hr Sat. Steam @ 3 % Overpressure Blowdown (PSIG) 106,6
Hydrostatic Test (PSIG) Inlet 2350 Outlet 975
(Applicable to valves for closed systems only)
7. Pressure Retaining Pieces

	Serial No. or Identification	Material Specification Incl. Type or Grade
Body	06.24.8-3	SA 352 LCB
Bonnet or Yoke	11.05.8-3	SA 352 LCB
Support Rods		
Nozzle	AJW 036	SA 350 LF2
Disc	54.30.5-1A	SA 351 CF3A
Spring Washers	26.30.95.67	45 Cr Mo V 67
Adjusting Screw	AFU 092 AFU 068	SA 182 F 316
Spindle	AJE 036	A 564-74 type 630 cond. H1100
Spring		
Bolting	AJK/AVS/ANY/AJJ/AYE	SA 193-B7/SA 194-7/SA 194-2H
*~~Other Pieces~~	AWZ/AJJ/APA/AJL/AJS	
Liner	55.35.8-1	SA 351 CF3A
Cover	53.28.8-9	SA 351 CF8M
Vent. Pipe	AKE 011	SA 105
Flanges	AKF 021 + 034	SA 105

Max. outside diam. valve body 478 mm (18,82)"

Max. outside length valve 1642 mm (64,64)"

* Supplemental sheets in form of lists, sketches or drawings may be used provided (1) size is 8-1/2" × 11", (2) information in items 1-2 on this Data Report is included on each sheet, and (3) each sheet is numbered and number of sheets is recorded at top of this form.

(10/77) This form (E00042) may be obtained from the Order Dept., ASME, 345 E. 47th St., New York, N.Y. 10017

FORM NV-1 (Back)

CERTIFICATE OF COMPLIANCE

We certify that the statements made in this report are correct and that this valve conforms to the rules of construction of the ASME Code for Nuclear Power Plant Components, Section III, Div. 1., 1974 Edition, Addenda Sum. '76 (Date), Code Case No. N.A.

Date 81-06-25 Signed G. Dikkers & Co NV (N Certificate Holder) by [signature]

Our ASME Certificate of Authorization No. 1806 to use the NV (NV) symbol expires 1st. July 1980 (Date)

CERTIFICATION OF DESIGN

Design information on file at General Electric and ~~Perry II~~

Stress analysis report (Class 1 only) on file at General Electric and ~~Perry II~~

Design specifications certified by[1] Boyd P. Brooks

PE State California Reg. No. 13655

Stress report certified by[1] Robert L. Weiss

PE State California/Illinois Reg. No. M 14921/62-25749

[1] Signature not required—list name only.

CERTIFICATE OF SHOP INSPECTION

I, the undersigned, holding a valid commission issued by the National Board of Boiler and Pressure Vessel Inspectors and the State or Province of Ohio, PA and employed by ~~Kemper Ins.~~ of ~~Long Grove Ill~~ have inspected the pump, or valve, described in this Data Report on 23 March, 19 79 and state that to the best of my knowledge and belief, the N Certificate Holder has constructed this pump, or valve, in accordance with the ASME Code for Nuclear Power Plant Components.

By signing this certificate, neither the Inspector nor his employer makes any warrant, expressed or implied, concerning the equipment described in this Data Report. Furthermore, neither the Inspector nor his employer shall be liable in any manner for any personal injury or property damage or a loss of any kind arising from or connected with this inspection.

Date 6-26 19 81

Signed [signature] (Inspector) Commissions NB 4805 (Nat'l. Bd., State Prov. and No.)

1B21-344

NIS-2/NR-1 OWNER'S REPORT FOR REPAIRS OR REPLACEMENTS

As required by the Provisions of the ASME Code Section XI

PNPP No. 9308 Rev. 9/11/00 NQI-1741

1. Owner: FIRSTENERGY CORP.
10 Center Road, Perry, Ohio 44081

Date 6-20-03
Sheet 1 of 2

2. Plant: Perry Nuclear Power Plant (PNPP)
10 Center Road, Perry, Ohio 44081

Unit ONE
WO 01-17350-000,001 R/0
(Repair Org. P.O. No., etc.)

3. Work Performed By: FIRSTENERGY Nuclear Operating Company PNPP
10 Center Road, Perry, Ohio 44081

Type Code Symbol Stamp NR
Authorization No. 33
Expiration Date 9-26-05

4. Identification of System: 1B21 NUCLEAR BOILER PROCESS INSTRUMENTATION

5. (a) Applicable Construction Code: ASME SECTION III NB ,1974 Edition
NAME/SECTION/DIVISION/CLASS

WINTER 19 75 Addenda Code Case(s) N224-1,N225,N3,N413,N71-9,N71-11,1644-5 1728, N272.

(b) Construction Code used for repairs, modifications, or replacements: 1974 Edition WINTER 75 Addenda * Code Case(s)

(c) ASME Code Section XI applicable for Inservice Inspection: 1989 Edition N/A Addenda N/A Code Case(s)

(d) Applicable Edition of Section XI Utilized for Repairs, Modification, or Replacements:

19 89 , EDITION 19 N/A Addenda N/A
Code Case(s)

(e) Design Responsibilities FIRSTENERGY NUCLEAR OPERATING COMPANY PNPP

6. Identification of Components Repaired, Modified, or Replacement Components

Name of Component	Name of Manufacturer	Manufacturer Serial No.	Nat. Board No.	Other ID.	Year Built	Repair, Replacement, or Modification	ASME Code Stamped
PIPING SYSTEM	GENERAL ELECTRIC	1B21	64084	N/A	1985	REPLACEMENT	YES

7. Description of Work: REMOVED VALVE S/N 160875 AND INSTALLED VALVE S/N 160870 @ 1B21F047H USING (12) NEW 1-5/8-8 INLET STUDS HEAT CODE Z4K ,AND (12) NEW 1-5/8-8 NUTS HEAT CODE (3) D284, (4) SVK, AND (5) C-139.

8. Test Conducted: Hydrostatic- ☐ Pneumatic- ☐ Nominal Operating Pressure- ☒ Other- ☐

Pressure 1025 psi Test Temperature 130 degrees F Code Case(s) N/A

NIS-2/NR-1 OWNER'S REPORT FOR REPAIRS OR REPLACEMENTS (Back)

PNPP No. 9308 Rev. 9/11/00 NQI-1741

9. Remarks: _____

NO NAMEPLATE/STAMPING PERFORMED DUE TO THE INTERFACE CONTROLS OF RA-2370 BEING IN EFFECT AND JURISDICTIONAL AUTHORITY CONCURRENCE HAVING BEEN RECEIVED.

Note: Attach all applicable Manufacturer's Data Reports. Supplemental sheets such as lists, sketches, or drawings may be used, provided (1) size is 8 1/2 in. x 11 in., (2) information in items 1 through 6 of this report is included on each sheet, and (3) each sheet is numbered and the number of sheets is recorded on the front of this form.

CERTIFICATE OF COMPLIANCE

I, JOHN W. MESSENGER, certify that to the best of my knowledge and belief the statements made in this report are correct and the repair, modification or replacement of the items described above conforms to Section XI of the ASME Code and to the National Board Inspection Code "NR" rules.

National Board Certificate of Authorization No. 33 to use the "NR stamp expires SEPT. 26, 20 05

Date JUNE 20, 20 03 Signed FENOC-PNPP (name of repair organization) [signature] (authorized representative) QE (title)

CERTIFICATE OF INSPECTION/INSERVICE INSPECTION

I, THOMAS G. LAPS, holding a valid commission issued by The National Board of Boiler and Pressure Vessel Inspectors and certificate of competency issued by the jurisdiction of OHIO and employed by HSB Ct. of HARTFORD, CONN. have inspected the repair, modification or replacement described in this report on JUNE 27 20 03 and state that to the best of my knowledge and belief, this repair, modification or replacement has been completed in accordance with Section XI of the ASME Code and the National Board Inspection Code "NR" rules.

By signing this certificate, neither the undersigned nor my employer makes any warranty, expressed or implied, concerning the work described in this report. Furthermore, neither the undersigned nor my employer shall be liable in any manner for any personal injury, property damage or loss of any kind arising from or connected with this inspection.

Date JUNE 27 20 03 Signed Thomas G. Laps (inspector) Commissions NB 9330 " " " " OHIO (National Board (include endorsements), and jurisdiction, and no.)

FORM NV-1 N CERTIFICATE HOLDERS' DATA REPORT FOR SAFETY AND SAFETY RELIEF VALVES*

As Required by the Provisions of the ASME Code, Section III, Div. I 1B21-344 pg 2 of 2

1 Manufactured by G. Bikkers & Co. N.V. Hengelo (O) The Netherlands
(Name and Address of N Certificate Holder)

2 Manufactured for General Electric San Jose Calif.
(Name and Address of Purchaser or Owner)

3 Location of Installation Perry II North Perry Ohio
(Name and Address)

4 (CRN) G471-6/125.04.03 rev.08 (Drawing No.) 68 (Nat'l Brd No.) (Year Built)

5 Valve G471 (Model No., Series No.) Identifying Nos 160870 (N Certificate Holder's Serial No.) 1979

Type safety/relief
Safety, Safety Relief, Pilot, Power Actuated

Orifice Size 4.84" inch Nominal Inlet Size 8" inch Outlet Size 10" inch

6 Set Pressure (PSIG) 1165 Rated Temperature 585 °F

Stamped Capacity 905732 lbs/hr @ Sat. Steam 3 % Overpressure Blowdown (PSIG) 45,5

Hydrostatic Test (PSIG) Inlet 2350 Outlet 975
(Applicable to valves for closed systems only)

7. Pressure Retaining Pieces

	Serial No. or Identification		Material Specification Incl. Type or Grade
Body	09.11.8	SN 2	SA 352 LGB
Bonnet or Yoke	04.30.8		SA 352 LGB
~~Support Rods~~			
Nozzle	AJW 008		SA 350 LF2
Disc	57.29.8	3A	SA 351 CF3A
Spring Washers	26.30.95	nr. 71	45 Cr Mo V 67
Adjusting Screw	AME 033	AME 001	SA 182 F316
Spindle	AJE 012		A 564-74 type 630 cond. HI 100
~~Spring~~			
Bolting	ANY/AYE/AVS/ALR/AWZ		SA 193-B7/SA 194-7/SA 194-2H
~~Other Pieces~~	AMR/AJM/AJL/AJJ		
Liner	52.35.8	SN 2	SA 351 CF3A
Cover	53.28.8	SN 4	SA 351 CF8M
Vent pipe	AKE 017		SA 105
Flanges	AKF 015	AFV 059	SA 105

Max. outside diam. valve body 480 mm. (18,89)"

Max. outside length valve 1641 mm. (64,61)"

* Supplemental sheets in form of lists, sketches or drawings may be used provided (1) size is 8-1/2" × 11", (2) information in items 1-2 on this Data Report is included on each sheet, and (3) each sheet is numbered and number of sheets is recorded at top of this form

(10/77) This form (E00042) may be obtained from the Order Dept., ASME, 345 E. 47th St., New York, N.Y. 10017

FORM NV-1 (Back)

2 of 206

CERTIFICATE OF COMPLIANCE

We certify that the statements made in this report are correct and that this valve conforms to the rules of construction of the ASME Code for Nuclear Power Plant Components, Section III, Div 1, 1974 Edition, Addenda Sum. '76 (Date), Code Case No

Date 1979 03-12 Signed G. Dikkers & Co. N.V. (N Certificate Holder) by W.M. Willems

Our ASME Certificate of Authorization No 1806 to use the NV (NV) symbol expires 1st July, 1980 (Date)

CERTIFICATION OF DESIGN

Design information on file at General Electric and Perry II

Stress analysis report (Class 1 only) on file at General Electric and Perry II

Design specifications certified by[1] Boyd P. Brooks

PE State California Reg. No. 13655

Stress report certified by[1] Robert J. Weiss

PE State California/Illinios Reg. No. M14921/62-25749

[1] Signature not required—list name only.

CERTIFICATE OF SHOP INSPECTION

I, the undersigned, holding a valid commission issued by the National Board of Boiler and Pressure Vessel Inspectors and the State or Province of Ohio and employed by Kemper Ins of Long Grove Ill. have inspected the pump, or valve, described in this Data Report on 12 March, 19 79 and state that to the best of my knowledge and belief, the N Certificate Holder has constructed this pump, or valve, in accordance with the ASME Code for Nuclear Power Plant Components.

By signing this certificate, neither the Inspector nor his employer makes any warrant, expressed or implied, concerning the equipment described in this Data Report. Furthermore, neither the Inspector nor his employer shall be liable in any manner for any personal injury or property damage or a loss of any kind arising from or connected with this inspection.

Date 3-12, 19 79

Signed [illegible] (Inspector) Commissions No. 4456 (Nat'l Bd., State Prov. and No.)

1B21-345

NIS-2/NR-1 OWNER'S REPORT FOR REPAIRS OR REPLACEMENTS

As required by the Provisions of the ASME Code Section XI

PNPP No. 9308 Rev. 9/11/00 NQI-1741

1. Owner: FIRSTENERGY CORP.
10 Center Road, Perry, Ohio 44081

Date 6-20-03
Sheet 1 of 2

2. Plant: Perry Nuclear Power Plant (PNPP)
10 Center Road, Perry, Ohio 44081

Unit ONE
WO 01-17351-000,001 R/0
(Repair Org. P.O. No., etc.)

3. Work Performed By: FIRSTENERGY Nuclear Operating Company PNPP
10 Center Road, Perry, Ohio 44081

Type Code Symbol Stamp NR
Authorization No. 33
Expiration Date 9-26-05

4. Identification of System: 1B21 NUCLEAR BOILER PROCESS INSTRUMENTATION

5. (a) Applicable Construction Code: ASME SECTION III NB ,1974 Edition
NAME/SECTION/DIVISION/CLASS

WINTER 19 75 Addenda Code Case(s) N224-1,N225,N3,N413,N71-9,N71-11,1644-5 1728, N272.

(b) Construction Code used for repairs, modifications, or replacements: 1974 (Edition) WINTER 75 (Addenda) * (Code Case(s))

(c) ASME Code Section XI applicable for Inservice Inspection: 1989 (Edition) N/A (Addenda) N/A (Code Case(s))

(d) Applicable Edition of Section XI Utilized for Repairs, Modification, or Replacements:

19 89 , EDITION 19 N/A Addenda N/A Code Case(s)

(e) Design Responsibilities FIRSTENERGY NUCLEAR OPERATING COMPANY PNPP

6. Identification of Components Repaired, Modified, or Replacement Components

Name of Component	Name of Manufacturer	Manufacturer Serial No.	Nat. Board No.	Other ID.	Year Built	Repair, Replacement, or Modification	ASME Code Stamped
PIPING SYSTEM	GENERAL ELECTRIC	1B21	64084	N/A	1985	REPLACEMENT	YES

7. Description of Work: REMOVED VALVE S/N 160882 AND INSTALLED VALVE S/N 160860 @ 1B21F051B USING (3) NEW 1-5/8-8 INLET STUDS HEAT CODE Z4K ,AND (12) NEW 1-5/8-8 NUTS HEAT CODE D284.

8. Test Conducted: Hydrostatic- ☐ Pneumatic- ☐ Nominal Operating Pressure- ☒ Other- ☐

Pressure 1025 psi Test Temperature 130 degrees F Code Case(s) N/A

NIS-2/NR-1 OWNER'S REPORT FOR REPAIRS OR REPLACEMENTS (Back)

PNPP No. 9308 Rev. 9/11/00 NQI-1741

9. Remarks:

NO NAMEPLATE/STAMPING PERFORMED DUE TO THE INTERFACE CONTROLS OF RA-2370 BEING IN EFFECT AND JURISDICTIONAL AUTHORITY CONCURRENCE HAVING BEEN RECEIVED.

Note: Attach all applicable Manufacturer's Data Reports. Supplemental sheets such as lists, sketches, or drawings may be used, provided (1) size is 8 1/2 in. x 11 in., (2) information in items 1 through 6 of this report is included on each sheet, and (3) each sheet is numbered and the number of sheets is recorded on the front of this form.

CERTIFICATE OF COMPLIANCE

I, JOHN W. MESSENGER, certify that to the best of my knowledge and belief the statements made in this report are correct and the repair, modification or replacement of the items described above conforms to Section XI of the ASME Code and to the National Board Inspection Code "NR" rules.

National Board Certificate of Authorization No. 33 to use the "NR stamp expires SEPT. 26, 20 05

Date JUNE 20, 20 03 Signed FENOC-PNPP (name of repair organization) (authorized representative) QE (title)

CERTIFICATE OF INSPECTION/INSERVICE INSPECTION

I, THOMAS G. LAPS, holding a valid commission issued by The National Board of Boiler and Pressure Vessel Inspectors and certificate of competency issued by the jurisdiction of OHIO and employed by HSB CT. of HARTFORD, CONN. have inspected the repair, modification or replacement described in this report on July 9, 20 03 and state that to the best of my knowledge and belief, this repair, modification or replacement has been completed in accordance with Section XI of the ASME Code and the National Board Inspection Code "NR" rules.

By signing this certificate, neither the undersigned nor my employer makes any warranty, expressed or implied, concerning the work described in this report. Furthermore, neither the undersigned nor my employer shall be liable in any manner for any personal injury, property damage or loss of any kind arising from or connected with this inspection.

Date July 9, 20 03 Signed Thomas G. Laps (inspector) Commissions NB 9330 "N" "A" OHIO CONN. (National Board (include endorsements), and jurisdiction, and no.)

* Corrected report

1B21-345 49262

FORM NV-1 N CERTIFICATE HOLDERS' DATA REPORT FOR SAFETY AND SAFETY RELIEF VALVES*

As Required by the Provisions of the ASME Code, Section III, Div. I

1. Manufactured by G. Dikkers & Co. NV. Hengelo (O) The Netherlands
(Name and Address of N Certificate Holder)
2. Manufactured for General Electric, San Jose, California
(Name and Address of Purchaser or Owner)
3. Location of Installation Perry I North Perry Ohio
(Name and Address)
4. G 471-6/125.04.03 rev. 6 (CRN) 35 (Nat'l Brd. No.) 1978 (Year Built)
(Drawing No.)
5. Valve G471 (Model No., Series No.) Identifying Nos. 160860 (N Certificate Holder's Serial No.)
Type Safety/Relief
Safety, Safety Relief; Pilot; Power Actuated
Orifice Size 4.84" inch Nominal Inlet Size 8" inch Outlet Size 10" inch
6. Set Pressure (PSIG) 1190 Rated Temperature 585 °F
Stamped Capacity 924933 lbs/hr @ 3 % Overpressure Blowdown (PSIG) 108.0
Sat. Steam
Hydrostatic Test (PSIG) Inlet 2350 Outlet 975
(Applicable to valves for closed systems only)
7. Pressure Retaining Pieces

	Serial No. or Identification	Material Specification Incl. Type or Grade
Body	08.05.8 R2	SA 352 LCB
Bonnet or Yoke	08.24.8 sn 3	SA 352 LCB
Support Rods		
* Nozzle	AEU 062	SA 350 LF2
Disc	58.52.7 1B	SA 351 CF3A
Spring Washers	26.30.95-40	45 Cr Mo V 67
Adjusting Screw	AFU 071 AME 023	SA 182 F 316
Spindle	AEW 008	A 564-74 type 630 cond. H1100
Spring		
Bolting	AVT/AJR/AKA/AJJ/ALR	SA 193-B7/SA 194-7/SA 194-2H
~~Other Pieces~~	AMR/AUY/AJM/AJL	
Liner	55.07.8 sn 2	SA 351 CF3A
Cover	58.46.7 sn 6	SA 351 CF8M
Vent. Pipe	AKE 002	SA 105
Flanges	AFV 029 AFV 004	SA 105

Max. outside diam. valve body 480 mm (18.90)"

Max. outside length valve 1642 mm (64.65)"

* Supplemental sheets in form of lists, sketches or drawings may be used provided (1) size is 8-1/2" × 11", (2) information in Items 1-2 on this Data Report is included on each sheet, and (3) each sheet is numbered and number of sheets is recorded at top of this form.

(10/77) This form (E00042) may be obtained from the Order Dept., ASME, 345 E. 47th St., New York, N.Y. 10017

FORM NV-1 (Back)

CERTIFICATE OF COMPLIANCE

We certify that the statements made in this report are correct and that this valve conforms to the rules of construction of the ASME Code for Nuclear Power Plant Components, Section III, Div. 1., 1974 Edition, Addenda sum. '76 (Date)

Code Case No. N.A.

Date 81-06-25 Signed G. Dikkers & Co NV (N Certificate Holder) by [signature]

Our ASME Certificate of Authorization No. 1806 to use the NV (NV) symbol expires 1st. July 1980 (Date)

CERTIFICATION OF DESIGN

Design information on file at General Electric and Perry II

Stress analysis report (Class 1 only) on file at General Electric and Perry II

Design specifications certified by[1] Boyd P. Brooks

PE State California Reg. No. 13655

Stress report certified by[1] Robert L. Weiss

E State California/Illinois Reg. No. M 14921/62-25749

[1] Signature not required—list name only.

CERTIFICATE OF SHOP INSPECTION

I, the undersigned, holding a valid commission issued by the National Board of Boiler and Pressure Vessel Inspectors and the State or Province of Ohio, PA and employed by Kemper Ins. of Long Grove Ill have inspected the pump, or valve, described in this Data Report on 28-11, 19 78 and state that to the best of my knowledge and belief, the N Certificate Holder has constructed this pump, or valve, in accordance with the ASME Code for Nuclear Power Plant Components.

By signing this certificate, neither the Inspector nor his employer makes any warrant, expressed or implied, concerning the equipment described in this Data Report. Furthermore, neither the Inspector nor his employer shall be liable in any manner for any personal injury or property damage or a loss of any kind arising from or connected with this inspection.

Date 6-26, 1981.

Signed [signature] (Inspector) Commissions NB 4805 (Nat'l. Bd., State Prov. and No.)

1B21-346

NIS-2/NR-1 OWNER'S REPORT FOR REPAIRS OR REPLACEMENTS

As required by the Provisions of the ASME Code Section XI

PNPP No. 9308 Rev. 9/11/00 NQI-1741

1. Owner: FIRSTENERGY CORP. Date 6-20-03
10 Center Road, Perry, Ohio 44081 Sheet 1 of 2

2. Plant: Perry Nuclear Power Plant (PNPP) Unit ONE
10 Center Road, Perry, Ohio 44081 WO 01-17352-000,001 R/0
(Repair Org. P.O. No., etc.)

3. Work Performed By: FIRSTENERGY Nuclear Operating Company PNPP Type Code Symbol Stamp NR
10 Center Road, Perry, Ohio 44081 Authorization No. 33
Expiration Date 9-26-05

4. Identification of System: 1B21 NUCLEAR BOILER PROCESS INSTRUMENTATION

5. (a) Applicable Construction Code: ASME SECTION III NB ,1974 Edition
NAME/SECTION/DIVISION/CLASS

WINTER 19 75 Addenda Code Case(s) N224-1,N225,N3,N413,N71-9,N71-11,1644-5 1728, N272.

(b) Construction Code used for repairs, modifications, or replacements: 1974 (Edition) WINTER 75 (Addenda) * (Code Case(s))

(c) ASME Code Section XI applicable for Inservice Inspection: 1989 (Edition) N/A (Addenda) N/A (Code Case(s))

(d) Applicable Edition of Section XI Utilized for Repairs, Modification, or Replacements:
19 89 , EDITION 19 N/A Addenda N/A Code Case(s)

(e) Design Responsibilities FIRSTENERGY NUCLEAR OPERATING COMPANY PNPP

6. Identification of Components Repaired, Modified, or Replacement Components

Name of Component	Name of Manufacturer	Manufacturer Serial No.	Nat. Board No.	Other ID.	Year Built	Repair, Replacement, or Modification	ASME Code Stamped
PIPING SYSTEM	GENERAL ELECTRIC	1B21	64084	N/A	1985	REPLACEMENT	YES

7. Description of Work: REMOVED VALVE S/N 160896 AND INSTALLED VALVE S/N 160857 @ 1B21F051D USING (1) NEW 1-5/8-8 INLET STUDS HEAT CODE Z4K ,AND (12) NEW 1-5/8-8 NUTS HEAT CODE D284.

8. Test Conducted: Hydrostatic- ☐ Pneumatic- ☐ Nominal Operating Pressure- ☒ Other- ☐
Pressure 1025 psi Test Temperature 130 degrees F Code Case(s) N/A

NIS-2/NR-1 OWNER'S REPORT FOR REPAIRS OR REPLACEMENTS (Back)

PNPP No. 9308 Rev. 9/11/00 NQI-1741

9. Remarks:

NO NAMEPLATE/STAMPING PERFORMED DUE TO THE INTERFACE CONTROLS OF RA-2370 BEING IN EFFECT AND JURISDICTIONAL AUTHORITY CONCURRENCE HAVING BEEN RECEIVED.

Note: Attach all applicable Manufacturer's Data Reports. Supplemental sheets such as lists, sketches, or drawings may be used, provided (1) size is 8 1/2 in. x 11 in., (2) information in items 1 through 6 of this report is included on each sheet, and (3) each sheet is numbered and the number of sheets is recorded on the front of this form.

CERTIFICATE OF COMPLIANCE

I, JOHN W. MESSENGER, certify that to the best of my knowledge and belief the statements made in this report are correct and the repair, modification or replacement of the items described above conforms to Section XI of the ASME Code and to the National Board Inspection Code "NR" rules.

National Board Certificate of Authorization No. 33 to use the "NR stamp expires SEPT. 26, 20 05

Date JUNE 20, 20 03 Signed FENOC-PNPP (name of repair organization) [signature] (authorized representative) QE (title)

CERTIFICATE OF INSPECTION/INSERVICE INSPECTION

I, THOMAS G. LAPS, holding a valid commission issued by The National Board of Boiler and Pressure Vessel Inspectors and certificate of competency issued by the jurisdiction of OHIO and employed by H.S.B. Ct. of HARTFORD, CONN. have inspected the repair, modification or replacement described in this report on July 28 20 03 and state that to the best of my knowledge and belief, this repair, modification or replacement has been completed in accordance with Section XI of the ASME Code and the National Board Inspection Code "NR" rules.

By signing this certificate, neither the undersigned nor my employer makes any warranty, expressed or implied, concerning the work described in this report. Furthermore, neither the undersigned nor my employer shall be liable in any manner for any personal injury, property damage or loss of any kind arising from or connected with this inspection.

Date July 28, 20 03 Signed [signature] (inspector) Commissions NB 9330 "N" "I" "A" OHIO CONN (National Board (include endorsements), and jurisdiction, and no.)

IB21-346 PQ 2 of 2

* Corrected report

FORM NV-1 N CERTIFICATE HOLDERS' DATA REPORT FOR SAFETY AND SAFETY RELIEF VALVES*

As Required by the Provisions of the ASME Code, Section III, Div. I

1. Manufactured by G. Dikkers & Co. NV. Hengelo (O) The Netherlands (Name and Address of N Certificate Holder)
2. Manufactured for General Electric, San Jose, California (Name and Address of Purchaser or Owner)
3. Location of Installation Perry 1 North Perry Ohio (Name and Address)
4. (CRN) G 471-6/125.04.03 rev. 6 (Drawing No.) 32 (Nat'l. Brd. No.) 1978 (Year Built)
5. Valve G471 (Model No., Series No.) Identifying Nos. 160857 (N Certificate Holder's Serial No.)

   Type Safety/Relief (Safety, Safety Relief; Pilot; Power Actuated)

   Orifice Size 4,84" inch Nominal Inlet Size 8" inch Outlet Size 10" inch

6. Set Pressure (PSIG) 1180 Rated Temperature 585 °F

   Stamped Capacity 917253 lbs/hr (Sat. Steam) @ 3 % Overpressure Blowdown (PSIG) 30.6

   Hydrostatic Test (PSIG) Inlet 2350 Outlet 975 (Applicable to valves for closed systems only)

7. Pressure Retaining Pieces

	Serial No. or Identification	Material Specification Incl. Type or Grade
Body	13.45.7 sn 2	SA 352 LCB
Bonnet or Yoke	11.12.8 sn 1	SA 352 LCB
Support Rods		
Nozzle	AEU 003	SA 350 LF2
Disc	61.03.8 2A	SA 351 CF3A
Spring Washers	26.30.95-52	45 Cr Mo V 67
Adjusting Screw	AFU 040 AFU 006	SA 182 F 316
Spindle	AEW 002	A 564-74 type 630 cond. H1100
Spring		
Bolting	AVT/AJR/AKA/AJJ	SA 193-B7/SA 194-7/SA 194-2H
~~Other Pieces~~	ALR/AUY/AMR/AJM/AJL	
Liner	58.06.8 sn 2	SA 351 CF3A
* Cover	58.46.7 sn 9	SA 351 CF8M
* Vent. Pipe	AFW 005	SA 105
Flanges	AFV 026 AFV 053	SA 105

Max. outside diam. valve body 476 mm (18.74)"

Max. outside length valve 1645 mm (64.76)"

* Supplemental sheets in form of lists, sketches or drawings may be used provided (1) size is 8-1/2" × 11", (2) information in Items 1-2 on this Data Report is included on each sheet, and (3) each sheet is numbered and number of sheets is recorded at top of this form.

(10/77) This form (E00042) may be obtained from the Order Dept., ASME, 345 E. 47th St., New York, N.Y. 10017

FORM NV-1 (Back)

CERTIFICATE OF COMPLIANCE

We certify that the statements made in this report are correct and that this valve conforms to the rules of construction of the ASME Code for Nuclear Power Plant Components, Section III, Div. 1., 1974 Edition, Addenda Sum. '76 (Date), Code Case No. N.A.

Date 81.06.25 Signed G. Dikkers & Co NV (N Certificate Holder) by [signature]

Our ASME Certificate of Authorization No. 1806 to use the NV (NV) symbol expires 1st. July 1980 (Date).

CERTIFICATION OF DESIGN

Design information on file at General Electric and Perry II

Stress analysis report (Class 1 only) on file at General Electric and Perry II

Design specifications certified by[1] Boyd P. Brooks

PE State California Reg. No. 13655

Stress report certified by[1] Robert L. Weiss

PE State California/Illinois Reg. No. M 14921/62-25749

[1] Signature not required—list name only.

CERTIFICATE OF SHOP INSPECTION

I, the undersigned, holding a valid commission issued by the National Board of Boiler and Pressure Vessel Inspectors and the State or Province of Ohio, PA and employed by Kemper Ins. of Long Grove Ill have inspected the pump, or valve, described in this Data Report on 24-11, 19 78 and state that to the best of my knowledge and belief, the N Certificate Holder has constructed this pump, or valve, in accordance with the ASME Code for Nuclear Power Plant Components.

By signing this certificate, neither the Inspector nor his employer makes any warrant, expressed or implied, concerning the equipment described in this Data Report. Furthermore, neither the Inspector nor his employer shall be liable in any manner for any personal injury or property damage or a loss of any kind arising from or connected with this inspection.

Date 6-26, 19 81.

Signed J. W. Stokes (Inspector) Commissions NB 4805 (Nat'l. Bd., State Prov. and No.)

1B21-347

NIS-2/NR-1 OWNER'S REPORT FOR REPAIRS OR REPLACEMENTS

As required by the Provisions of the ASME Code Section XI

PNPP No. 9308 Rev. 9/11/00 NQI-1741

1. Owner: FIRSTENERGY CORP. Date 6-20-03
10 Center Road, Perry, Ohio 44081 Sheet 1 of 2

2. Plant: Perry Nuclear Power Plant (PNPP) Unit ONE
10 Center Road, Perry, Ohio 44081 WO 01-17355-000,001R/0
(Repair Org. P.O. No., etc.)

3. Work Performed By: FIRSTENERGY Nuclear Operating Company PNPP Type Code Symbol Stamp NR
10 Center Road, Perry, Ohio 44081 Authorization No. 33
Expiration Date 9-26-05

4. Identification of System: 1B21 NUCLEAR BOILER PROCESS INSTRUMENTATION

5. (a) Applicable Construction Code: ASME SECTION III NB ,1974 Edition
NAME/SECTION/DIVISION/CLASS

WINTER 19 75 Addenda Code Case(s) N224-1,N225,N3,N413,N71-9,N71-11,1644-5 1728, N272.

(b) Construction Code used for repairs, modifications, or replacements: 1974 (Edition) WINTER 75 (Addenda) * (Code Case(s))

(c) ASME Code Section XI applicable for Inservice Inspection: 1989 (Edition) N/A (Addenda) N/A (Code Case(s))

(d) Applicable Edition of Section XI Utilized for Repairs, Modification, or Replacements:
19 89 , EDITION 19 N/A Addenda N/A Code Case(s)

(e) Design Responsibilities FIRSTENERGY NUCLEAR OPERATING COMPANY PNPP

6. Identification of Components Repaired, Modified, or Replacement Components

Name of Component	Name of Manufacturer	Manufacturer Serial No.	Nat. Board No.	Other ID.	Year Built	Repair, Replacement, or Modification	ASME Code Stamped
PIPING SYSTEM	GENERAL ELECTRIC	1B21	64084	N/A	1985	REPLACEMENT	YES

7. Description of Work: REMOVED VALVE S/N 160885 AND INSTALLED VALVE S/N 160866 @ 1B21F041C USING (4) NEW 1-5/8-8 INLET STUDS HEAT CODE Z4K ,AND (11) NEW 1-5/8-8 NUTS HEAT CODE D284, AND (1) HEAT CODE TCD.

8. Test Conducted: Hydrostatic- ☐ Pneumatic- ☐ Nominal Operating Pressure- ☒ Other- ☐
Pressure 1025 psi Test Temperature 130 degrees F Code Case(s) N/A

NIS-2/NR-1 OWNER'S REPORT FOR REPAIRS OR REPLACEMENTS (Back)

PNPP No. 9308 Rev. 9/11/00 NQI-1741

9. Remarks: _____

NO NAMEPLATE/STAMPING PERFORMED DUE TO THE INTERFACE CONTROLS OF RA-2370 BEING IN EFFECT AND JURISDICTIONAL AUTHORITY CONCURRENCE HAVING BEEN RECEIVED.

Note: Attach all applicable Manufacturer's Data Reports. Supplemental sheets such as lists, sketches, or drawings may be used, provided (1) size is 8 1/2 in. x 11 in., (2) information in items 1 through 6 of this report is included on each sheet, and (3) each sheet is numbered and the number of sheets is recorded on the front of this form.

CERTIFICATE OF COMPLIANCE

I, JOHN W. MESSENGER, certify that to the best of my knowledge and belief the statements made in this report are correct and the repair, modification or replacement of the items described above conforms to Section XI of the ASME Code and to the National Board Inspection Code "NR" rules.

National Board Certificate of Authorization No. 33 to use the "NR stamp expires SEPT. 26, 20 05

Date JUNE 20, 20 03 Signed FENOC-PNPP (name of repair organization) (authorized representative) QE (title)

CERTIFICATE OF INSPECTION/INSERVICE INSPECTION

I, THOMAS G. LAPS, holding a valid commission issued by The National Board of Boiler and Pressure Vessel Inspectors and certificate of competency issued by the jurisdiction of OHIO and employed by HSB CT. of HARTFORD, CONN. have inspected the repair, modification or replacement described in this report on JUNE 27 20 03 and state that to the best of my knowledge and belief, this repair, modification or replacement has been completed in accordance with Section XI of the ASME Code and the National Board Inspection Code "NR" rules.

By signing this certificate, neither the undersigned nor my employer makes any warranty, expressed or implied, concerning the work described in this report. Furthermore, neither the undersigned nor my employer shall be liable in any manner for any personal injury, property damage or loss of any kind arising from or connected with this inspection.

Date JUNE 27 20 03 Signed (inspector) Commissions NB 9330 NIA OHIO CONN. (National Board (include endorsements), and jurisdiction, and no.)

REPORT NO. P0059-009

1B21-347 PG2 of 2

* Corrected report

FORM NV-1 N CERTIFICATE HOLDERS' DATA REPORT FOR SAFETY AND SAFETY RELIEF VALVES*

3

As Required by the Provisions of the ASME Code, Section III, Div. I

1. Manufactured by G. Dikkers & Co. NV. Hengelo (O) The Netherlands
(Name and Address of N Certificate Holder)
2. Manufactured for General Electric, San Jose, California
(Name and Address of Purchaser or Owner)
3. Location of Installation Perry II North Perry Ohio
(Name and Address)
4. (CRN) G 471-6/125.04.03 rev. 6 (Drawing No.) 65 (Nat'l. Brd. No.) 1978 (Year Built)
5. Valve G471 (Model No., Series No.) Identifying Nos. 160866 (N Certificate Holder's Serial No.)
Type Safety/Relief
Safety, Safety Relief; Pilot; Power Actuated
Orifice Size 4,84" inch Nominal Inlet Size 8" inch Outlet Size 10" inch
6. Set Pressure (PSIG) 1165 Rated Temperature 585 °F
Stamped Capacity 905739 lbs/hr Sat. Steam @ 3 % Overpressure Blowdown (PSIG) 108.08
Hydrostatic Test (PSIG) Inlet 2350 Outlet 975
(Applicable to valves for closed systems only)
7. Pressure Retaining Pieces

	Serial No. or Identification	Material Specification Incl. Type or Grade
* Body	11.12.8 sn 1	SA 352 LCB
* Bonnet or Yoke	14.32.8 sn 1	SA 352 LCB
Support Rods		
Nozzle	AJW 011	SA 350 LF2
Disc	53.04.8 2B	SA 351 CF3A
Spring Washers	26.30.95-44	45 Cr Mo V 67
Adjusting Screw	AFU 123 AME 004	SA 182 F 316
Spindle	AJE 048	A 564-74 type 630 cond. H1100
Spring		
Bolting	AYE/ANY/AVS/ALR/ AWZ/AMR/AJM/AJL/AJJ	SA 193-B7/SA 194-7/SA 194-2H
~~Other Pieces~~		
* Liner	54.18.8 sn 1	SA 351 CF3A
Cover	53.28.8 sn 10	SA 351 CF8M
Vent. Pipe	AKE 059	SA 105
Flanges	AKF 019 AFV 105	SA 105

Max. outside diam. valve body 481 mm (18,94)"

Max. outside length valve 1645 mm (64.76)"

* Supplemental sheets in form of lists, sketches or drawings may be used provided (1) size is 8-1/2" × 11", (2) information in Items 1-2 on this Data Report is included on each sheet, and (3) each sheet is numbered and number of sheets is recorded at top of this form.

(10/77) This form (E00042) may be obtained from the Order Dept., ASME, 345 E. 47th St., New York, N.Y. 10017

3

FORM NV-1 (Back)

CERTIFICATE OF COMPLIANCE

We certify that the statements made in this report are correct and that this valve conforms to the rules of construction of the ASME Code for Nuclear Power Plant Components, Section III, Div. 1., 1974 Edition, Addenda sum. '76. (Date)
Code Case No. N.A.

Date 81.06.25 Signed G. Dikkers & Co NV (N Certificate Holder) by [signature]

Our ASME Certificate of Authorization No. 1806 to use the NV (NV) symbol expires 1st. July 1980 (Date)

CERTIFICATION OF DESIGN

Design information on file at General Electric and Perry II
Stress analysis report (Class 1 only) on file at General Electric and Perry II

Design specifications certified by[1] Boyd P. Brooks
PE State California Reg. No. 13655
tress report certified by[1] Robert L. Weiss
PE State California/Illinois Reg. No. M 14921/62-25749

[1] Signature not required—list name only.

CERTIFICATE OF SHOP INSPECTION

I, the undersigned, holding a valid commission issued by the National Board of Boiler and Pressure Vessel Inspectors and the State or Province of Ohio, PA and employed by Kemper Ins. of Long Grove Ill have inspected the pump, or valve, described in this Data Report on 12 March, 19 79 and state that to the best of my knowledge and belief, the N Certificate Holder has constructed this pump, or valve, in accordance with the ASME Code for Nuclear Power Plant Components.

By signing this certificate, neither the Inspector nor his employer makes any warrant, expressed or implied, concerning the equipment described in this Data Report. Furthermore, neither the Inspector nor his employer shall be liable in any manner for any personal injury or property damage or a loss of any kind arising from or connected with this inspection.

Date 6-26 1981.
Signed J.W. [signature] (Inspector) Commissions NB 4805 (Nat'l. Bd., State Prov. and No.)

1B21-348

NIS-2/NR-1 OWNER'S REPORT FOR REPAIRS OR REPLACEMENTS

As required by the Provisions of the ASME Code Section XI

PNPP No. 9308 Rev. 9/11/00 NQI-1741

1. Owner: FIRSTENERGY CORP.
10 Center Road, Perry, Ohio 44081

Date 8/6/03
Sheet 1 of 1

2. Plant: Perry Nuclear Power Plant (PNPP)
10 Center Road, Perry, Ohio 44081

Unit one
wo 03-2255
(Repair Org. P.O. No., etc.)

3. Work Performed By: FIRSTENERGY Nuclear Operating Company PNPP
10 Center Road, Perry, Ohio 44081

Type Code Symbol Stamp NR
Authorization No. 33
Expiration Date 9/26/2005

4. Identification of System: Nuclear Boiler System

5. (a) Applicable Construction Code: ASME Section III NB ,1974 Edition
NAME/SECTION/DIVISION/CLASS

Winter 19 75 Addenda Code Case(s) 1644-5,N413,N242,N272,N282

(b) Construction Code used for repairs, modifications, or replacements: 1974 (Edition) Winter 75 (Addenda) N/A (Code Case(s))

(c) ASME Code Section XI applicable for Inservice Inspection: 1989 (Edition) N/A (Addenda) N/A (Code Case(s))

(d) Applicable Edition of Section XI Utilized for Repairs, Modification, or Replacements:
19 89 , N/A 19 N/A Addenda N/A
Code Case(s)

(e) Design Responsibilities FIRSTENERGY Nuclear Oprerating Company PNPP

6. Identification of Components Repaired, Modified, or Replacement Components

Name of Component	Name of Manufacturer	Manufacturer Serial No.	Nat. Board No.	Other ID.	Year Built	Repair, Replacement, or Modification	ASME Code Stamped
PIPING SYSTEM	PULLMAN POWER	1N27	89	N/A	1985	REPLACEMENT	YES

7. Description of Work: Test connection on side of valve was removed to perform internal inspection and reinstalled using E-7018 3/32" weld rod HT # C40618. VALVE 1B21-F0032A TGC 8/8/03 9/17 8-8-03

8. Test Conducted: Hydrostatic- ☐ Pneumatic- ☐ Nominal Operating Pressure- ☒ Other- ☐
Pressure 1040 psi Test Temperature 68 degrees F Code Case(s) N416-1

NIS-2/NR-1 OWNER'S REPORT FOR REPAIRS OR REPLACEMENTS (Back)

PNPP No. 9308 Rev. 9/11/00 NQI-1741

9. Remarks:

NO NAMEPLATE/STAMPING PERFORMED DUE TO THE INTERFACE CONTROLS OF RA-2370 BEING IN EFFECT AND JURISDICTIONAL AUTHORITY CONCURRENCE HAVING BEEN RECEIVED.

Note: Attach all applicable Manufacturer's Data Reports. Supplemental sheets such as lists, sketches, or drawings may be used, provided (1) size is 8 1/2 in. x 11 in., (2) information in items 1 through 6 of this report is included on each sheet, and (3) each sheet is numbered and the number of sheets is recorded on the front of this form.

CERTIFICATE OF COMPLIANCE

I, Michael J Tepsick, certify that to the best of my knowledge and belief the statements made in this report are correct and the repair, modification or replacement of the items described above conforms to Section XI of the ASME Code and to the National Board Inspection Code "NR" rules.

National Board Certificate of Authorization No. 33 to use the "NR stamp expires 26 Sept., 20 05

Date 6 Aug., 20 03 Signed FENOC-PNPP (name of repair organization) [signature] (authorized representative) QC (title)

CERTIFICATE OF INSPECTION/INSERVICE INSPECTION

I, Thomas G Laps, holding a valid commission issued by The National Board of Boiler and Pressure Vessel Inspectors and certificate of competency issued by the jurisdiction of OHIO and employed by HSB CT. of Hartford, Conn. have inspected the repair, modification or replacement described in this report on AUG. 6, 20 03 and state that to the best of my knowledge and belief, this repair, modification or replacement has been completed in accordance with Section XI of the ASME Code and the National Board Inspection Code "NR" rules.

By signing this certificate, neither the undersigned nor my employer makes any warranty, expressed or implied, concerning the work described in this report. Furthermore, neither the undersigned nor my employer shall be liable in any manner for any personal injury, property damage or loss of any kind arising from or connected with this inspection.

Date AUG. 6, 20 03 Signed [signature] (inspector) Commissions NB 9330 "N" "I" "A" Ohio Comm. (National Board (include endorsements), and jurisdiction, and no.)

1B21-349

NIS-2/NR-1 OWNER'S REPORT FOR REPAIRS OR REPLACEMENTS

As required by the Provisions of the ASME Code Section XI

PNPP No. 9308 Rev. 9/11/00 NQI-1741

1. Owner: FIRSTENERGY CORP.
10 Center Road, Perry, Ohio 44081

Date 7/9/03
Sheet 1 of 2

2. Plant: Perry Nuclear Power Plant (PNPP)
10 Center Road, Perry, Ohio 44081

Unit ONE
W.O. 99-7795R/0
(Repair Org. P.O. No., etc.)

3. Work Performed By: FIRSTENERGY Nuclear Operating Company PNPP
10 Center Road, Perry, Ohio 44081

Type Code Symbol Stamp NR
Authorization No. 33
Expiration Date 9/26/2005

4. Identification of System: 1B21 NUCLEAR BOILER ,PROCESS INSTRUMENTATION

5. (a) Applicable Construction Code: ASME Section III NB ,1974 Edition
NAME/SECTION/DIVISION/CLASS

Winter 19 75 Addenda Code Case(s) N-32-4,N-242,N-272,N-282,N-241,N-413,1728,1644-5,N-416-1

(b) Construction Code used for repairs, modifications, or replacements: 1974 Edition, Winter 75 Addenda, N/A Code Case(s)

(c) ASME Code Section XI applicable for Inservice Inspection: 1989 Edition, N/A Addenda, N/A Code Case(s)

(d) Applicable Edition of Section XI Utilized for Repairs, Modification, or Replacements:
19 89 , N/A 19 N/A Addenda N/A Code Case(s)

(e) Design Responsibilities FIRSTENERGY Nuclear Operating Company PNPP

6. Identification of Components Repaired, Modified, or Replacement Components

Name of Component	Name of Manufacturer	Manufacturer Serial No.	Nat. Board No.	Other ID.	Year Built	Repair, Replacement, or Modification	ASME Code Stamped
PIPING SYSTEM	PULLMAN POWER	1B21	64084	N/A	1985	REPLACEMENT	YES

7. Description of Work: REPLACED valve 1B21F0002 with a 2" Hermavalve SN# 93AVX. Replaced 2" seamless pipe HT#Y48833 utilizing weld rod E7018 HT# C40618,and ER70S-2 HT# CP7808.

8. Test Conducted: Hydrostatic- ☐ Pneumatic- ☐ Nominal Operating Pressure- ☒ Other- ☐
Pressure 1025 psi Test Temperature 130degrees F Code Case(s) N-416-1

NIS-2/NR-1 OWNER'S REPORT FOR REPAIRS OR REPLACEMENTS (Back)

PNPP No. 9308 Rev. 9/11/00 NQI-1741

9. Remarks: NONE.

NO NAMEPLATE/STAMPING PERFORMED DUE TO THE INTERFACE CONTROLS OF RA-2370 BEING IN EFFECT AND JURISDICTIONAL AUTHORITY CONCURRENCE HAVING BEEN RECEIVED.

Note: Attach all applicable Manufacturer's Data Reports. Supplemental sheets such as lists, sketches, or drawings may be used, provided (1) size is 8 1/2 in. x 11 in., (2) information in items 1 through 6 of this report is included on each sheet, and (3) each sheet is numbered and the number of sheets is recorded on the front of this form.

CERTIFICATE OF COMPLIANCE

I, DAVID K. ASKEW, certify that to the best of my knowledge and belief the statements made in this report are correct and the repair, modification or replacement of the items described above conforms to Section XI of the ASME Code and to the National Board Inspection Code "NR" rules.

National Board Certificate of Authorization No. 33 to use the "NR stamp expires 26 Sept., 20 05

Date 7/9 20 03 Signed FENOC-PNPP (name of repair organization) David K. Askew (authorized representative) QE. (title)

CERTIFICATE OF INSPECTION/INSERVICE INSPECTION

I, Thomas G. Laps, holding a valid commission issued by The National Board of Boiler and Pressure Vessel Inspectors and certificate of competency issued by the jurisdiction of OHIO and employed by H.S.B. CT of HARTFORD, CONN have inspected the repair, modification or replacement described in this report on July 18 20 03 and state that to the best of my knowledge and belief, this repair, modification or replacement has been completed in accordance with Section XI of the ASME Code and the National Board Inspection Code "NR" rules.

By signing this certificate, neither the undersigned nor my employer makes any warranty, expressed or implied, concerning the work described in this report. Furthermore, neither the undersigned nor my employer shall be liable in any manner for any personal injury, property damage or loss of any kind arising from or connected with this inspection.

Date July 18 20 03 Signed Thomas G. Laps (inspector) Commissions NB 9330 "N" "I" "A" Ohio Comm. (National Board (include endorsements), and jurisdiction, and no.)

1B21-349

FORM NPV-1 N CERTIFICATE HOLDERS' DATA REPORT FOR NUCLEAR PUMPS OR VALVES*

Page 2 of 2

As Required by the Provisions of the ASME Code, Section III, Div. 1

1. Manufactured by FLOWSERVE CORPORATION, 1900 S. Saunders St., Raleigh, NC 27603
(Name and Address of N Certificate Holder)

2. Manufactured for FIRST ENERGY COMPANY, AKRON OH 44309
(Name and Address of Purchaser or Owner)

3. Location of Installation CEI, PERRY PLANT, NORTH PERRY, OH 44801
(Name and Address)

4. Pump or Valve Valve Nominal Inlet Size 2" (inch) Outlet Size 2" (inch)

	(a) Model No. Series No. or Type	(b) N Certificate Holder's Serial No.	(c) Canadian Registration No.	(d) Drawing No.	(e) Class	(f) Nat'l. Bd. No.	(g) Year Built
(1)	15014MLPT1	92AVX	N/A	ACD-31602625 / 5	1	N/A	2003
(2)	15014MLPT1	93AVX	N/A	ACD-31602625 / 5	1	N/A	2003
(3)							
(4)							
(5)							
(6)							
(7)							
(8)							
(9)							
(10)							

5. 2" HERMAVALVE
(Brief description of service for which equipment was designed)

BONNET MATERIAL MEETS ASME III 1974 ED., WINTER'76 ADD. 21688

6. Design Conditions 2350 (Pressure) psi 700 (Temperature) °F or Valve Pressure Class 1500 (1)

7. Cold Working Pressure 3600 psi at 100 °F.

8. Pressure Retaining Pieces

Mark No.	Material Spec. No.	Manufacturer	Remarks
(a) Castings			
H244	A732 GR21	STAINLESS FOUNDRY	DISK
(b) Forgings			
KD6	SA105	INTERSTATE	BODY
17174	SA696 GRC	DUBOSE ENERGY	BONNET

(1) For manually operated valves only

*Supplemental sheets in form of lists, sketches or drawings may be used provided (1) size is 8-1/2" x 11", (2) information in items 1, 2 and 5 on this Data Report is included on each sheet, and (3) each sheet is numbered and number of sheets is recorded at top of this form.

6

Valve S/N 92AVX through 93AVX

Mark No.	Material Spec. No.	Manufacturer	Remarks
(c) Bolting			
(d) Other Parts			

9. Hydrostatic test 5400 psi. Disk Differential test pressure 3900 psi.

CERTIFICATE OF COMPLIANCE

We certify that the statements made in this report are correct and that this pump, or valve, conforms to the rules of construction of the ASME Code for Nuclear Power Plant Components. Section III, Div. 1., Edition 1974

Addenda WINTER '75, Code Case No. N-30, Date 2/18/03

Signed Flowserve Corporation (N Certificate Holder) by [signature]

Our ASME Certificate of Authorization No. N-1562 to use the N (N) symbol expires 11-26-03 (Date)

CERTIFICATION OF DESIGN

Design information on file at FLOWSERVE CORPORATION, RALEIGH, NC

Stress analysis report (Class 1 only) on file at FLOWSERVE CORPORATION

Design specifications certified by (1) FRANCIS C ROSCH JR

PE State PA Reg. No. 002855-E

Stress analysis certified by (1) SL ADAMS III

PE State NC Reg. No. 4187

(1) Signature not required. List name only.

CERTIFICATE OF SHOP INSPECTION

I, the undersigned, holding a valid commission issued by the National Board of Boiler and Pressure Vessel Inspectors and the State or Province of North Carolina and employed by HSB CT of Hartford Connecticut have inspected the pump, or valve, described in this Data Report on 2/18/03, and state that, to the best of my knowledge and belief, the N Certificate Holder has constructed this pump, or valve, in accordance with ASME Code, Section III.

By signing this certificate neither the Inspector nor his employer makes any warranty, expressed or implied, concerning the equipment described in this s Data Report. Furthermore, neither the Inspector nor his employer shall be liable in any manner for any personal injury or property damage or a loss of any kind arising from or connected with this Inspection.

Date 2/18/03

Signed [signature] (Inspector) Commissions NB#11666 NBA NC 1421 (Nat'l Bd., State, Prov. and No.)

1B21-350

NIS-2/NR-1 OWNER'S REPORT FOR REPAIRS OR REPLACEMENTS

As required by the Provisions of the ASME Code Section XI

PNPP No. 9308 Rev. 9/11/00 NQI-1741

1. Owner: FIRSTENERGY CORP. 10 Center Road, Perry, Ohio 44081 — Date 7/9/03 — Sheet 1 of 2

2. Plant: Perry Nuclear Power Plant (PNPP) 10 Center Road, Perry, Ohio 44081 — Unit ONE — W.O. 99-7794R/0 (Repair Org. P.O. No., etc.)

3. Work Performed By: FIRSTENERGY Nuclear Operating Company PNPP 10 Center Road, Perry, Ohio 44081 — Type Code Symbol Stamp NR — Authorization No. 33 — Expiration Date 9/26/2005

4. Identification of System: 1B21 NUCLEAR BOILER ,PROCESS INSTRUMENTATION

5. (a) Applicable Construction Code: ASME Section III NB (NAME/SECTION/DIVISION/CLASS) ,1974 Edition Winter 19 75 Addenda Code Case(s) N-32-4,N-242,N-272,N-282,N-241,N-413,1728,1644-5,N-416-1

(b) Construction Code used for repairs, modifications, or replacements: 1974 (Edition) Winter 75 (Addenda) N/A (Code Case(s))

(c) ASME Code Section XI applicable for Inservice Inspection: 1989 (Edition) N/A (Addenda) N/A (Code Case(s))

(d) Applicable Edition of Section XI Utilized for Repairs, Modification, or Replacements:

19 89 , N/A 19 N/A Addenda N/A (Code Case(s))

(e) Design Responsibilities FIRSTENERGY Nuclear Operating Company PNPP

6. Identification of Components Repaired, Modified, or Replacement Components

Name of Component	Name of Manufacturer	Manufacturer Serial No.	Nat. Board No.	Other ID.	Year Built	Repair, Replacement, or Modification	ASME Code Stamped
PIPING SYSTEM	PULLMAN POWER	1B21	64084	N/A	1985	REPLACEMENT	YES

7. Description of Work: REPLACED valve 1B21F0001 with a 2" Hermavalve SN# 92AVX. Replaced 2" seamless pipe HT#Y48833 utilizing weld rod E7018 HT# C40618,and ER70S-2 HT# CP7808.

8. Test Conducted: Hydrostatic- ☐ Pneumatic- ☐ Nominal Operating Pressure- ☒ Other- ☐

Pressure 1025 psi Test Temperature 130degrees F Code Case(s) N-416-1

NIS-2/NR-1 OWNER'S REPORT FOR REPAIRS OR REPLACEMENTS (Back)

PNPP No. 9308 Rev. 9/11/00 NQI-1741

9. Remarks: NONE.

NO NAMEPLATE/STAMPING PERFORMED DUE TO THE INTERFACE CONTROLS OF RA-2370 BEING IN EFFECT AND JURISDICTIONAL AUTHORITY CONCURRENCE HAVING BEEN RECEIVED.

Note: Attach all applicable Manufacturer's Data Reports. Supplemental sheets such as lists, sketches, or drawings may be used, provided (1) size is 8 1/2 in. x 11 in., (2) information in items 1 through 6 of this report is included on each sheet, and (3) each sheet is numbered and the number of sheets is recorded on the front of this form.

CERTIFICATE OF COMPLIANCE

I, DAVID K. ASKEW, certify that to the best of my knowledge and belief the statements made in this report are correct and the repair, modification or replacement of the items described above conforms to Section XI of the ASME Code and to the National Board Inspection Code "NR" rules.

National Board Certificate of Authorization No. 33 to use the "NR stamp expires 26 Sept, 20 05

Date 7/9 20 03 Signed FENOC-PNPP (name of repair organization) David K. Askew (authorized representative) Q.E. (title)

CERTIFICATE OF INSPECTION/INSERVICE INSPECTION

I, Thomas G. Laps, holding a valid commission issued by The National Board of Boiler and Pressure Vessel Inspectors and certificate of competency issued by the jurisdiction of OHIO and employed by H.S.B. CT. of HARTFORD, CONN have inspected the repair, modification or replacement described in this report on July 24, 2003 and state that to the best of my knowledge and belief, this repair, modification or replacement has been completed in accordance with Section XI of the ASME Code and the National Board Inspection Code "NR" rules.

By signing this certificate, neither the undersigned nor my employer makes any warranty, expressed or implied, concerning the work described in this report. Furthermore, neither the undersigned nor my employer shall be liable in any manner for any personal injury, property damage or loss of any kind arising from or connected with this inspection.

Date July 24, 2003 Signed Thomas G. Laps (inspector) Commissions NB 9330 "N" "I" "A" Ohio Comm. (National Board (include endorsements), and jurisdiction, and no.)

1B21-350
Page 2 of 2

FORM NPV-1 N CERTIFICATE HOLDERS' DATA REPORT FOR NUCLEAR PUMPS OR VALVES*

As Required by the Provisions of the ASME Code, Section III, Div. 1

1. Manufactured by FLOWSERVE CORPORATION, 1900 S. Saunders St., Raleigh, NC 27603
(Name and Address of N Certificate Holder)

2. Manufactured for FIRST ENERGY COMPANY, AKRON OH 44309
(Name and Address of Purchaser or Owner)

3. Location of Installation CEI, PERRY PLANT, NORTH PERRY, OH 44801
(Name and Address)

4. Pump or Valve Valve Nominal Inlet Size 2" (inch) Outlet Size 2" (inch)

	(a) Model No. Series No. or Type	(b) N Certificate Holder's Serial No.	(c) Canadian Registration No.	(d) Drawing No.	(e) Class	(f) Nat'l. Bd. No.	(g) Year Built
(1)	15014MLPT1	92AVX	N/A	ACD-31602625 / 5	1	N/A	2003
(2)	15014MLPT1	93AVX	N/A	ACD-31602625 / 5	1	N/A	2003
(3)							
(4)							
(5)							
(6)							
(7)							
(8)							
(9)							
(10)							

5. 2" HERMAVALVE
(Brief description of service for which equipment was designed)

BONNET MATERIAL MEETS ASME III 1974 ED., WINTER'76 ADD. 21688

6. Design Conditions 2350 (Pressure) psi 700 (Temperature) °F or Valve Pressure Class 1500 (1)

7. Cold Working Pressure 3600 psi at 100 °F.

8. Pressure Retaining Pieces

Mark No.	Material Spec. No.	Manufacturer	Remarks
(a) Castings			
H244	A732 GR21	STAINLESS FOUNDRY	DISK
(b) Forgings			
KD6	SA105	INTERSTATE	BODY
17174	SA696 GRC	DUBOSE ENERGY	BONNET

(1) For manually operated valves only

*Supplemental sheets in form of lists, sketches or drawings may be used provided (1) size is 8-1/2" x 11", (2) information in items 1, 2 and 5 on this Data Report is included on each sheet, and (3) each sheet is numbered and number of sheets is recorded at top of this form.

6

Valve S/N 92AVX through 93AVX

Mark No.	Material Spec. No.	Manufacturer	Remarks
(c) Bolting			
(d) Other Parts			

9. Hydrostatic test 5400 psi. Disk Differential test pressure 3900 psi.

CERTIFICATE OF COMPLIANCE

We certify that the statements made in this report are correct and that this pump, or valve, conforms to the rules of construction of the ASME Code for Nuclear Power Plant Components. Section III, Div. 1., Edition 1974

Addenda WINTER '75, Code Case No. N-30, Date 2/18/03

Signed Flowserve Corporation (N Certificate Holder) by [signature]

Our ASME Certificate of Authorization No. N-1562 to use the N (N) symbol expires 11-26-03 (Date)

CERTIFICATION OF DESIGN

Design information on file at FLOWSERVE CORPORATION, RALEIGH, NC

Stress analysis report (Class 1 only) on file at FLOWSERVE CORPORATION

Design specifications certified by (1) FRANCIS C ROSCH JR

PE State PA Reg. No. 002855-E

Stress analysis certified by (1) SL ADAMS III

PE State NC Reg. No. 4187

(1) Signature not required. List name only.

CERTIFICATE OF SHOP INSPECTION

I, the undersigned, holding a valid commission issued by the National Board of Boiler and Pressure Vessel Inspectors and the State or Province of North Carolina and employed by HSB CT of Hartford Connecticut have inspected the pump, or valve, described in this Data Report on 2 / 18 / 03, and state that, to the best of my knowledge and belief, the N Certificate Holder has constructed this pump, or valve, in accordance with ASME Code, Section III.

By signing this certificate neither the Inspector nor his employer makes any warranty, expressed or implied, concerning the equipment described in this s Data Report. Furthermore, neither the Inspector nor his employer shall be liable in any manner for any personal injury or property damage or a loss of any kind arising from or connected with this Inspection.

Date 2 / 18 / 03

Signed [signature] (Inspector) Commissions NB#11666 NB# NC 1421 (Nat'l Bd., State, Prov. and No.)

1B21-351

NIS-2/NR-1 OWNER'S REPORT FOR REPAIRS OR REPLACEMENTS

As required by the Provisions of the ASME Code Section XI

PNPP No. 9308 Rev. 9/11/00 NQI-1741

1. Owner: FIRSTENERGY CORP.
10 Center Road, Perry, Ohio 44081
Date 7-18-03
Sheet 1 of 1

2. Plant: Perry Nuclear Power Plant (PNPP)
10 Center Road, Perry, Ohio 44081
(Repair Org. P.O. No., etc.)
Unit ONE
WO 03-004869-000 R/0

3. Work Performed By: FIRSTENERGY Nuclear Operating Company PNPP
10 Center Road, Perry, Ohio 44081
Type Code Symbol Stamp NR
Authorization No. 33
Expiration Date 9-26-05

4. Identification of System: 1B21 NUCLEAR BOILER SYSTEM (1B21)

5. (a) Applicable Construction Code: ASME SECTION III NB ,1974 Edition
NAME/SECTION/DIVISION/CLASS

WINTER 19 75 Addenda Code Case(s) 1728, 272,1644-4

(b) Construction Code used for repairs, modifications, or replacements: 1974 (Edition) WINTER 75 (Addenda) * (Code Case(s))

(c) ASME Code Section XI applicable for Inservice Inspection: 1989 (Edition) N/A (Addenda) N/A (Code Case(s))

(d) Applicable Edition of Section XI Utilized for Repairs, Modification, or Replacements:

19 89 , EDITION 19 N/A Addenda N/A
Code Case(s)

(e) Design Responsibilities FIRSTENERGY NUCLEAR OPERATING COMPANY PNPP

6. Identification of Components Repaired, Modified, or Replacement Components

Name of Component	Name of Manufacturer	Manufacturer Serial No.	Nat. Board No.	Other ID.	Year Built	Repair, Replacement, or Modification	ASME Code Stamped
VALVE	ATWOOD MORILL	3-560	N/A	1B21 F022C	1976	REPLACEMENT	YES

7. Description of Work: REWORKED VALVE 1B21F022C USING THE FOLLOWING ASME PARTS (18) 2-1/4 X15-1/2 SA-5 STUDS HEAT # M65887 AND (18) 2-1/4 SA-540 HEAVY HEX NUTS HEAT # J206.

8. Test Conducted: Hydrostatic- ☐ Pneumatic- ☐ Nominal Operating Pressure- ☒ Other- ☐
Pressure 1040 psi Test Temperature NOT degrees F Code Case(s) N/A

NIS-2/NR-1 OWNER'S REPORT FOR REPAIRS OR REPLACEMENTS (Back)

PNPP No. 9308 Rev. 9/11/00 NQI-1741

9. Remarks:

NO NAMEPLATE/STAMPING PERFORMED DUE TO THE INTERFACE CONTROLS OF RA-2370 BEING IN EFFECT AND JURISDICTIONAL AUTHORITY CONCURRENCE HAVING BEEN RECEIVED.

Note: Attach all applicable Manufacturer's Data Reports. Supplemental sheets such as lists, sketches, or drawings may be used, provided (1) size is 8 1/2 in. x 11 in., (2) information in items 1 through 6 of this report is included on each sheet, and (3) each sheet is numbered and the number of sheets is recorded on the front of this form.

CERTIFICATE OF COMPLIANCE

I, JOHN W. MESSENGER, certify that to the best of my knowledge and belief the statements made in this report are correct and the repair, modification or replacement of the items described above conforms to Section XI of the ASME Code and to the National Board Inspection Code "NR" rules.

National Board Certificate of Authorization No. 33 to use the "NR stamp expires SEPT. 26, 20 05

Date July 18, 2003 Signed FENOC-PNPP (name of repair organization) J. Messenger (authorized representative) QE (title)

CERTIFICATE OF INSPECTION/INSERVICE INSPECTION

I, THOMAS G. LAPS, holding a valid commission issued by The National Board of Boiler and Pressure Vessel Inspectors and certificate of competency issued by the jurisdiction of OHIO and employed by H.S.B. CT. of HARTFORD, CONN have inspected the repair, modification or replacement described in this report on July 21, 20 03 and state that to the best of my knowledge and belief, this repair, modification or replacement has been completed in accordance with Section XI of the ASME Code and the National Board Inspection Code "NR" rules.

By signing this certificate, neither the undersigned nor my employer makes any warranty, expressed or implied, concerning the work described in this report. Furthermore, neither the undersigned nor my employer shall be liable in any manner for any personal injury, property damage or loss of any kind arising from or connected with this inspection.

Date July 21 20 03 Signed Thomas G. Laps (inspector) Commissions NB 9330 NIA OHIO Conn (National Board (include endorsements), and jurisdiction, and no.)

1B33-114

NIS-2/NR-1 OWNER'S REPORT FOR REPAIRS OR REPLACEMENTS

As required by the Provisions of the ASME Code Section XI

PNPP No. 9308 Rev. 9/11/00 NQI-1741

1. Owner: FIRSTENERGY CORP. Date 04/30/03
10 Center Road, Perry, Ohio 44081 Sheet 1 of 2

2. Plant: Perry Nuclear Power Plant (PNPP) Unit 1
10 Center Road, Perry, Ohio 44081 01-008450-000, Rev 0
(Repair Org. P.O. No., etc.)

3. Work Performed By: FIRSTENERGY Nuclear Operating Company PNPP Type Code Symbol Stamp NR
10 Center Road, Perry, Ohio 44081 Authorization No. 33
Expiration Date 9-26-05

4. Identification of System: 1B33 Reactor Recirculation System

5. (a) Applicable Construction Code: ASME Sec III, Subsection NB ,1974 Edition
NAME/SECTION/DIVISION/CLASS

Winter 19 75 Addenda Code Case(s) 1644-4, 1682-1, 1706

(b) Construction Code used for repairs, modifications, or replacements: 1974 (Edition) W75 (Addenda) N/A (Code Case(s))

(c) ASME Code Section XI applicable for Inservice Inspection: 1989 (Edition) N/A (Addenda) N/A (Code Case(s))

(d) Applicable Edition of Section XI Utilized for Repairs, Modification, or Replacements:
19 89 , N/A 19 N/A Addenda N/A (Code Case(s))

(e) Design Responsibilities FIRSTENERGY Nuclear Operating Company

6. Identification of Components Repaired, Modified, or Replacement Components

Name of Component	Name of Manufacturer	Manufacturer Serial No.	Nat. Board No.	Other ID.	Year Built	Repair, Replacement, or Modification	ASME Code Stamped
Support	E-Systems	058	N/A	1B33-G7066A	1979	Replacement	Yes

7. Description of Work: Removed E-System 100 KIP Snubber Serial Number 058 and replaced it with rebuilt Snubber Serial Number 022

8. Test Conducted: Hydrostatic- ☐ Pneumatic- ☐ Nominal Operating Pressure- ☐ Other- ☐
Pressure N/A psi Test Temperature N/A degrees F Code Case(s) N/A

NIS-2/NR-1 OWNER'S REPORT FOR REPAIRS OR REPLACEMENTS (Back)

PNPP No. 9308 Rev. 9/11/00 NQI-1741

9. Remarks:

NO NAMEPLATE/STAMPING PERFORMED DUE TO THE INTERFACE CONTROLS OF RA-2370 BEING IN EFFECT AND JURISDICTIONAL AUTHORITY CONCURRENCE HAVING BEEN RECEIVED.

Note: Attach all applicable Manufacturer's Data Reports. Supplemental sheets such as lists, sketches, or drawings may be used, provided (1) size is 8 1/2 in. x 11 in., (2) information in items 1 through 6 of this report is included on each sheet, and (3) each sheet is numbered and the number of sheets is recorded on the front of this form.

CERTIFICATE OF COMPLIANCE

I, Lester J. Erbacher, certify that to the best of my knowledge and belief the statements made in this report are correct and the repair, modification or replacement of the items described above conforms to Section XI of the ASME Code and to the National Board Inspection Code "NR" rules.

National Board Certificate of Authorization No. 33 to use the "NR stamp expires 9-26, 20 05

Date April 30, 20 03 Signed FENOC-PNPP (name of repair organization) (authorized representative) QE 3/30/03 (title)

CERTIFICATE OF INSPECTION/INSERVICE INSPECTION

I, Thomas G. Laps, holding a valid commission issued by The National Board of Boiler and Pressure Vessel Inspectors and certificate of competency issued by the jurisdiction of OHIO and employed by Hartford Steam Boiler Ct. of Hartford, Conn. have inspected the repair, modification or replacement described in this report on May 1, 20 03 and state that to the best of my knowledge and belief, this repair, modification or replacement has been completed in accordance with Section XI of the ASME Code and the National Board Inspection Code "NR" rules.

By signing this certificate, neither the undersigned nor my employer makes any warranty, expressed or implied, concerning the work described in this report. Furthermore, neither the undersigned nor my employer shall be liable in any manner for any personal injury, property damage or loss of any kind arising from or connected with this inspection.

Date May 1, 20 03 Signed Thomas G. Laps (inspector) Commissions NB9330 "N" "I" "A" Ohio Comm. (National Board (include endorsements), and jurisdiction, and no.)

1833-114
SHEET 2 of 2

FORM NF-1 MANUFACTURERS' DATA REPORT FOR COMPONENT SUPPORTS*
As Required by the Provisions of the ASME Code Rules, Section III, Division 1

1. Manufactured by E-Systems, Inc., Montek Division, Salt Lake City, UT
(Name and address of manufacturer)

2. Manufactured for General Electric Company, San Jose, California
(Name and address of purchaser or owner)

3. Location of Installation Black Fox Recirculation System No. 2, Inola, Okla. 94036

4. Identification

(a) Component Support I.D. No.	(b) Canadian Registration No.	(c) Applicable Drawings with Last Rev. & Date	(d) Stress Report or Load Capacity Data Sheet	(e) Type of Component Support	(f) Class	(g) Nat'l Board No.	(h) Year Built
(1) 022	N/A	157510(N/C)	LCD152000-602*	Linear	1	None	1981
(2) 021	"	"	"	"	"	"	"
(3) 045	"	152210(E)	"	"	"	"	"
(4) 049	"	"	"	"	"	"	"
(5)							
(6)							
(7)							
(8)							
(9)							
(10)							

5. Remarks: * - To correct clerical error. Added -1 [illegible] 4/30/82

CERTIFICATE OF COMPLIANCE

We certify that the statements made in this report are correct and that these components supports conform to the rules of construction of the ASME Code for Nuclear Power Plant Components, Section III, Division 1, Edition 1977, Addenda Winter 1977 (Date)
Code Case No. 1644-8,1682-1,1706,N242-1.
Date Dec. 28, 1981 Signed E-Systems, Inc., Montek Div. by J. Lynch
(Manufacturer)
Our ASME Certificate of Authorization No. 1356 to use the NPT (NPT)
Symbol expires 1 March 1982 (Date)

GCM

OCT 28 19

CERTIFICATION OF DESIGN

Design Information on File at E-Systems, Inc., Montek Division, Salt Lake City, UT

Stress Report or Load Capacity Data Sheets on File at: E-Systems, Inc., Montek Division, Salt Lake City, UT

Design Specifications Certified by (1) M.D. Potter PE State CA
Reg. No. 25904.

Stress Analysis Report or Load Capacity Data Sheets Certified by (1) Robert Lee Warren III
PE State Utah Reg. No. 3942

(1) List name only, signature not required.

*Supplemental sheets in form of lists, sketches or drawings may be used provided (1) size is 8½ x 11 in., (2) information in items 1, 2, 4a, 4b on this data report is included on each sheet, and (3) each sheet is numbered and number of sheets is recorded at top of this form.

(1/76) This form (E00076) is available from the Order Dept., ASME, 345 E. 47 St., New York, N.Y. 10017

PAGE NO. 2

FORM NF-1 (Back)

CERTIFICATE OF SHOP INSPECTION

he undersigned, holding a valid commision issued by the National Board of Boiler and Pressure Vessel Inspectors and the State or ovince of Utah and employed by Royal Globe Ins. of New York, New York have inspected the component supports described in this Manufacturers' Data Report on Dec. 28, 81, and state that to the best of my knowledge and belief the Manufacturer has constructed these component supports in accordance ith the ASME Code for Nuclear Power Plant Components.

y signing this certificate, neither the Inspector nor his employer makes any warranty, expressed or implied, concerning the component upports described in this Manufacturers' Data Report. Furthermore, neither the Inspector nor his employer shall be liable in any anner for any personal injury or property damage or a loss of any kind arising from or connected with this inspection.

Date 28 Dec 1981

Signed [signature] Commissions Utah 2
(Nat'l Bd., State, Prov., and No.)

CERTIFICATION OF FIELD INSPECTION

I, the undersigned, holding a valid commision issued by the National Board of Boiler and Pressure Vessel Inspectors and the State or Province of _____ and employed by _____ of _____ have compared the statements in this Manufacturers' Data Report with the described component supports and state that the parts referred to as data items _____ not included in the certificate of shop inspection have been inspected by me and that to the best of my knowledge and belief the Manufacturer has constructed these component supports in accordance with the ASME Code for Nuclear Power Plant Components.

By signing this certificate neither the Inspector nor his employer makes any warranty, expressed or implied, concerning the component supports described in this Manufacturers' Data Report. Furthermore, neither the Inspector nor his employer shall be liable in any manner for any personal injury or property damage or a loss of any kind arising from or connected with this inspection.

Date _____

Signed _____ Commissions _____
(Nat'l Bd., State, Prov., and No.)

1B33-115

NIS-2/NR-1 OWNER'S REPORT FOR REPAIRS OR REPLACEMENTS

As required by the Provisions of the ASME Code Section XI

PNPP No. 9308 Rev. 9/11/00 NQI-1741

1. Owner: FIRSTENERGY CORP.
10 Center Road, Perry, Ohio 44081

Date 05/02/03
Sheet 1 of 2

2. Plant: Perry Nuclear Power Plant (PNPP)
10 Center Road, Perry, Ohio 44081

Unit 1
01-016597-000, R-0
(Repair Org. P.O. No., etc.)

3. Work Performed By: FIRSTENERGY Nuclear Operating Company PNPP
10 Center Road, Perry, Ohio 44081

Type Code Symbol Stamp NR
Authorization No. 33
Expiration Date 9-26-05

4. Identification of System: B33 Reactor Recirculation System

5. (a) Applicable Construction Code: ASME Sec III, Subsection , NF-1 ,1974 Edition
NAME/SECTION/DIVISION/CLASS

Winter 19 75 Addenda Code Case(s) 1728, 1644-4

(b) Construction Code used for repairs, modifications, or replacements: 1974 (Edition) W75 (Addenda) N/A (Code Case(s))

(c) ASME Code Section XI applicable for Inservice Inspection: 1989 (Edition) N/A (Addenda) N/A (Code Case(s))

(d) Applicable Edition of Section XI Utilized for Repairs, Modification, or Replacements:

19 89 , N/A 19 N/A Addenda N/A (Code Case(s))

(e) Design Responsibilities FIRSTENERGY Nuclear Operating Company

6. Identification of Components Repaired, Modified, or Replacement Components

Name of Component	Name of Manufacturer	Manufacturer Serial No.	Nat. Board No.	Other ID.	Year Built	Repair, Replacement, or Modification	ASME Code Stamped
Supports	E-Systems	B33	None	1B33G70 68A	1978	Replacement	Yes

7. Description of Work: Replaced Snubber 1B33-G006-S373, Serial Number 063 with rebuilt Serial number 020

8. Test Conducted: Hydrostatic- ☐ Pneumatic- ☐ Nominal Operating Pressure- ☐ Other- ☐

Pressure N/A psi Test Temperature N/A degrees F Code Case(s) N/A

NIS-2/NR-1 OWNER'S REPORT FOR REPAIRS OR REPLACEMENTS (Back)

PNPP No. 9308 Rev. 9/11/00 NQI-1741

9. Remarks: _____

NO NAMEPLATE/STAMPING PERFORMED DUE TO THE INTERFACE CONTROLS OF RA-2370 BEING IN EFFECT AND JURISDICTIONAL AUTHORITY CONCURRENCE HAVING BEEN RECEIVED.

Note: Attach all applicable Manufacturer's Data Reports. Supplemental sheets such as lists, sketches, or drawings may be used, provided (1) size is 8 1/2 in. x 11 in., (2) information in items 1 through 6 of this report is included on each sheet, and (3) each sheet is numbered and the number of sheets is recorded on the front of this form.

CERTIFICATE OF COMPLIANCE

I, Lester J. Erbacher, certify that to the best of my knowledge and belief the statements made in this report are correct and the repair, modification or replacement of the items described above conforms to Section XI of the ASME Code and to the National Board Inspection Code "NR" rules.

National Board Certificate of Authorization No. 33 to use the "NR stamp expires 9-26, 20 05

Date May 2, 20 03 Signed FENOC-PNPP (name of repair organization) (authorized representative) QE (title)

CERTIFICATE OF INSPECTION/INSERVICE INSPECTION

I, Thomas G. Laps, holding a valid commission issued by The National Board of Boiler and Pressure Vessel Inspectors and certificate of competency issued by the jurisdiction of OHIO and employed by Hartford Steam Boiler Ct. of Hartford, Conn. have inspected the repair, modification or replacement described in this report on May 2, 20 03 and state that to the best of my knowledge and belief, this repair, modification or replacement has been completed in accordance with Section XI of the ASME Code and the National Board Inspection Code "NR" rules.

By signing this certificate, neither the undersigned nor my employer makes any warranty, expressed or implied, concerning the work described in this report. Furthermore, neither the undersigned nor my employer shall be liable in any manner for any personal injury, property damage or loss of any kind arising from or connected with this inspection.

Date May 2, 20 2003 Signed Thomas G Laps (inspector) Commissions NB 9330 "N" "I" "A" Ohio Comm. (National Board (include endorsements), and jurisdiction, and no.)

1B33-115
2 of 2

FORM NF-1 MANUFACTURERS' DATA REPORT FOR COMPONENT SUPPORTS
As Required by the Provisions of the ASME Code Rules, Section III, Division 1

1. Manufactured by E-Systems, Inc., Montek Division, Salt Lake City, UT
(Name and address of manufacturer)

2. Manufactured for General Electric Company - San Jose, California
(Name and address of purchaser or owner)

3. Location of Installation Black Fox Recirculation System No. 2, Inola, Okla. 94036

4. Identification

(a) Component Support I.D. No.	(b) Canadian Registration No.	(c) Applicable Drawings with Last Rev. & Date	(d) Stress Report or Load Capacity Data Sheet	(e) Type of Component Support	(f) Class	(g) Nat'l Board No.	(h) Year Built
(1) 025	N/A	157510(N/C)	LCD152000-602	Linear	1	None	1981
(2) 018	"	"	"	"	"	"	"
(3) 017	"	"	"	"	"	"	"
(4) 019	"	"	"	"	"	"	"
(5) E514	"	152210(E)	"	"	"	"	"
(6) 020	"	"	"	"	"	"	"
(7) 009	"	"	"	"	"	"	"
(8) 002	"	"	"	"	"	"	"
(9) 020	"	157510(N/C)	"	"	"	"	"
(10) E515	"	152210(E)	"	"	"	"	"

5. Remarks: * - To correct clerical error. Added -1 4/29/82 4/30/82

CERTIFICATE OF COMPLIANCE

We certify that the statements made in this report are correct and that these components support conform to the rules of construction of the ASME Code for Nuclear Power Plant Components, Section III, Division 1, Edition 1977, Addenda Winter 1977
Code Case No. 1644-8, 1682-1, 1706, N242-1 *

Date Dec. 28, 1981 Signed E-Systems, Inc., Montek Div. by J. Lynch (Date)
(Manufacturer)

Our ASME Certificate of Authorization No. 1356 to use the NPT (NPT)

Symbol expires 1 March 1982 (Date)

GCM
OCT 28 1982

CERTIFICATION OF DESIGN

Design Information on File at E-Systems, Inc., Montek Division, Salt Lake City, UT

Stress Report or Load Capacity Data Sheets on File at: E-Systems, Inc., Montek Division, Salt Lake City, UT

Design Specifications Certified by (1) M.D. Potter PE State CA

Reg. No. 25904

Stress Analysis Report or Load Capacity Data Sheets Certified by (1) Robert Lee Warren III

PE State Utah Reg. No. 3942

(1) List name only, signature not required.

*Supplemental sheets in form of lists, sketches or drawings may be used provided (1) size is 8½ x 11, (2) information in items 1, 2, 3, 4a, 4b on this data report is included on each sheet, and (3) each sheet is numbered and number of sheets is recorded at top of this form.

(11/78) (This form (E00078) is available from the Order Dept., ASME, 345 E. 47 St., New York, N.Y. 10017)

FORM NF-1 (Back)

CERTIFICATE OF SHOP INSPECTION

I, the undersigned, holding a valid commission issued by the National Board of Boiler and Pressure Vessel Inspectors and the State or Province of Utah and employed by Royal Globe Ins. of New York, New York have inspected the component supports described in this Manufacturers' Data Report on Dec. 28, 1981, and state that to the best of my knowledge and belief the Manufacturer has constructed these component supports in accordance with the ASME Code for Nuclear Power Plant Components.

By signing this certificate, neither the Inspector nor his employer makes any warranty, expressed or implied, concerning the component supports described in this Manufacturers' Data Report. Furthermore, neither the Inspector nor his employer shall be liable in any manner for any personal injury or property damage or a loss of any kind arising from or connected with this inspection.

Date 28 Dec., 1981

Signed [illegible] Commissions Utah 2
(Nat'l Bd., State, Prov., and No.)

CERTIFICATION OF FIELD INSPECTION

I, the undersigned, holding a valid commission issued by the National Board of Boiler and Pressure Vessel Inspectors and the State or Province of _____ and employed by _____ of _____ have compared the statements in this Manufacturers' Data Report with the described component supports and state that the parts referred to as data items _____, not included in the certificate of shop inspection, have been inspected by me and that to the best of my knowledge and belief the Manufacturer has constructed these component supports in accordance with the ASME Code for Nuclear Power Plant Components.

By signing this certificate neither the Inspector nor his employer makes any warranty, expressed or implied, concerning the component supports described in this Manufacturers' Data Report. Furthermore, neither the Inspector nor his employer shall be liable in any manner for any personal injury or property damage or a loss of any kind arising from or connected with this inspection.

Date _____

Signed _____ Commissions _____
(Nat'l Bd., State, Prov., and No.)

1B33-116

NIS-2/NR-1 OWNER'S REPORT FOR REPAIRS OR REPLACEMENTS

As required by the Provisions of the ASME Code Section XI

PNPP No. 9308 Rev. 9/11/00 NQI-1741

1. Owner: FIRSTENERGY CORP.
10 Center Road, Perry, Ohio 44081

Date 05/02/03
Sheet 1 of 3

2. Plant: Perry Nuclear Power Plant (PNPP)
10 Center Road, Perry, Ohio 44081

Unit 1
00-002061-000, R-0
(Repair Org. P.O. No., etc.)

3. Work Performed By: FIRSTENERGY Nuclear Operating Company PNPP
10 Center Road, Perry, Ohio 44081

Type Code Symbol Stamp NR
Authorization No. 33
Expiration Date 9-26-05

4. Identification of System: Reactor Recirculation sstem Pump "A" Motor

5. (a) Applicable Construction Code: ASME Sec III, Subsection , NF-1 ,1974 Edition
NAME/SECTION/DIVISION/CLASS

Winter 19 75 Addenda Code Case(s) 1728, 1644-4

(b) Construction Code used for repairs, modifications, or replacements: 1974 (Edition) W75 (Addenda) N/A (Code Case(s))

(c) ASME Code Section XI applicable for Inservice Inspection: 1989 (Edition) N/A (Addenda) N/A (Code Case(s))

(d) Applicable Edition of Section XI Utilized for Repairs, Modification, or Replacements:
19 89 , N/A 19 N/A Addenda N/A (Code Case(s))

(e) Design Responsibilities FIRSTENERGY Nuclear Operating Company

6. Identification of Components Repaired, Modified, or Replacement Components

Name of Component	Name of Manufacturer	Manufacturer Serial No.	Nat. Board No.	Other ID.	Year Built	Repair, Replacement, or Modification	ASME Code Stamped
Support	E-Systems	B33	None	1B33-G7065A	1978	Replacement	Yes

7. Description of Work: Replaced Snubber 1B33-G006-S370-A, S/N 066 with S/N 031 using the Piston Rod End from the removed Snubber S/N 066

8. Test Conducted: Hydrostatic- ☐ Pneumatic- ☐ Nominal Operating Pressure- ☐ Other- ☐
Pressure N/A psi Test Temperature N/A degrees F Code Case(s) N/A

NIS-2/NR-1 OWNER'S REPORT FOR REPAIRS OR REPLACEMENTS (Back)

PNPP No. 9308 Rev. 9/11/00 NQI-1741

9. Remarks: _____

NO NAMEPLATE/STAMPING PERFORMED DUE TO THE INTERFACE CONTROLS OF RA-2370 BEING IN EFFECT AND JURISDICTIONAL AUTHORITY CONCURRENCE HAVING BEEN RECEIVED.

Note: Attach all applicable Manufacturer's Data Reports. Supplemental sheets such as lists, sketches, or drawings may be used, provided (1) size is 8 1/2 in. x 11 in., (2) information in items 1 through 6 of this report is included on each sheet, and (3) each sheet is numbered and the number of sheets is recorded on the front of this form.

CERTIFICATE OF COMPLIANCE

I, Lester J. Erbacher, certify that to the best of my knowledge and belief the statements made in this report are correct and the repair, modification or replacement of the items described above conforms to Section XI of the ASME Code and to the National Board Inspection Code "NR" rules.

National Board Certificate of Authorization No. 33 to use the "NR stamp expires 9-26, 20 05

Date May 2, 20 03 Signed FENOC-PNPP (name of repair organization) (authorized representative) QE (title)

CERTIFICATE OF INSPECTION/INSERVICE INSPECTION

I, Thomas G. Laps, holding a valid commission issued by The National Board of Boiler and Pressure Vessel Inspectors and certificate of competency issued by the jurisdiction of OHIO and employed by Hartford Steam Boiler Ct. of Hartford, Conn. have inspected the repair, modification or replacement described in this report on May 2, 20 03 and state that to the best of my knowledge and belief, this repair, modification or replacement has been completed in accordance with Section XI of the ASME Code and the National Board Inspection Code "NR" rules.

By signing this certificate, neither the undersigned nor my employer makes any warranty, expressed or implied, concerning the work described in this report. Furthermore, neither the undersigned nor my employer shall be liable in any manner for any personal injury, property damage or loss of any kind arising from or connected with this inspection.

Date May 2, 20 03 Signed Thomas G. Laps (inspector) Commissions NB 9330 "N" "I" "A" Ohio Comm. (National Board (include endorsements), and jurisdiction, and no.)

(CORRECTED COPY) 1633-116

2 of 3

FORM NF-1 MANUFACTURERS' DATA REPORT FOR COMPONENT SUPPORTS
As Required by the Provisions of the ASME Code Rules, Section III, Division 1

1. Manufactured by E-Systems, Inc., Montek Division, Salt Lake City, UT
(Name and address of manufacturer)

2. Manufactured for General Electric Company, San Jose, California
(Name and address of purchaser or owner)

3. Location of Installation Black Fox I.N.S., Tulsa, Oklahoma 74102

4. Identification

(a) Component Support I.D. No.	(b) Canadian Registration No.	(c) Applicable Drawing and Listing Date	(d) Stress Report or Load Capacity Data Sheet	(e) Type of Component Support	(f) Class	(g) National Board No.	(h) Year Built
(1) 082	N/A	37510 (3/6)	CC015-2000-602	Linear	1	None	1981
(2) 040							
(3) 044							
(4) 083							
(5) 029							
(6) 037		1-22-10(F)					
(7) 051							
(8) 022							
(9) 024							
(10) 044							

5. Remarks The correct clerical error added. [illegible]

CERTIFICATE OF COMPLIANCE

We certify that the statements made in this report are correct and that these components supports conform to the rules of construction of the ASME Code for Nuclear Power Plant Components, Section III, Division 1, Edition of 1977, Addenda Winter 1977 (Date and Addenda)

Code Case No. 1644-8, 1682-1, 1706, N242-1

Date 4 Dec 31, 1981 Signed E-Systems, Inc., Montek Div by J. Lynch
(Manufacturer)

Our ASME Certificate of Authorization No. 1356 to use the NPT (NPT)

Symbol Stamp 1 March 1982 (Date)

CERTIFICATION OF DESIGN

Design Information on File at E-Systems, Inc., Montek Division, Salt Lake City, UT

Stress Report or Load Capacity Data Sheets on File at: E-Systems, Inc., Montek Division, Salt Lake City, UT

Design Specifications Certified by (1) M.D. Potter PE State CA

Reg. No. 25904

Stress Analysis Report or Load Capacity Data Sheets Certified by (1) Robert Lee Warren III

PE State Utah Reg. No. 3942

(1) List name only, signature not required.

*Supplemental sheets in form of lists, sketches or drawings may be used provided (1) size is 8½ in., (2) information in items 1, 2, 4c, 4d on this data report is included on each sheet, and (3) each sheet is numbered and number of sheets is recorded at top of this form.

(11/76) This form (E00075) is available from the Order Dept., ASME, 345 E. 47 St., New York, N.Y. 10017

PAGE NO. 2

FORM NF-1 (Back)

CERTIFICATE OF SHOP INSPECTION

I, the undersigned, holding a valid commission issued by the National Board of Boiler and Pressure Vessel Inspectors and the State or Province of Utah and employed by Royal Globe Ins. of New York, New York have inspected the component supports described in this Manufacturers Data Report on Dec. 18, 1981 and state that to the best of my knowledge and belief, the Manufacturer has constructed these component supports in accordance with the ASME Code for Nuclear Power Plant Components.

By signing this certificate, neither the inspector nor his employer makes any warranty, expressed or implied, concerning the component supports described in this Manufacturers Data Report. Furthermore, neither the inspector nor his employer shall be liable in any manner for any personal injury or property damage or a loss of any kind arising from or connected with this inspection.

Date 16 Dec 81

Signed [signature] Commissions Utah 2

(Nat'l Bd., State, Prov., and No.)

CERTIFICATION OF FIELD INSPECTION

I, the undersigned, holding a valid commission issued by the National Board of Boiler and Pressure Vessel Inspectors and the State or Province of _____ and employed by _____ of _____ have compared the statements in this Manufacturers Data Report with the described component supports and state that the parts referred to as data items _____ not included in the certificate of shop inspection, have been inspected by me and that to the best of my knowledge and belief, the Manufacturer has constructed these component supports in accordance with the ASME Code for Nuclear Power Plant Components.

By signing this certificate, neither the inspector nor his employer makes any warranty, expressed or implied, concerning the component supports described in this Manufacturers Data Report. Furthermore, neither the inspector nor his employer shall be liable in any manner for any personal injury or property damage or a loss of any kind arising from or connected with this inspection.

Date _____

Signed _____ Commissions _____

(Nat'l Bd., State, Prov., and No.)

OCT 2 8 1987

File 2-A

1B33-116
3 of 3

FORM NF-1 MANUFACTURERS' DATA REPORT FOR COMPONENT SUPPORTS*
As Required by the Provisions of the ASME Code Rules, Section III, Division 1

1. Manufactured by E-Systems, Inc., Montek Division, Salt Lake City, Utah (Name and address of manufacturer)
2. Manufacturer for General Electric Company, San Jose, California (Name and address of purchaser or owner)
3. Location of Installation Perry 1 Nuclear Power Plant, Recirc. System, North Perry, Ohio
4. Identification

(a) Component Support I.D. No.	(b) Canadian Registration No.	(c) Applicable Drawings with Last Rev. & Date	(d) Stress Report or Load Capacity Data Sheet	(e) Type of Component Support	(f) Class	(g) Nat'l Board No.	(h) Year Built
(1) 065	N/A	152248C	LCD152000-602-19	Linear	I	None	1978
(2) 066	"	"	"	"	"	"	"
(3) 067	"	"	"	"	"	"	"
(4) 068	"	"	"	"	"	"	"
(5) 069	"	"	"	"	"	"	"
(6) 070	"	"	"	"	"	"	"
(7) 071	"	"	"	"	"	"	"
(8) 072	"	"	"	"	"	"	"
(9) 021	"	152253C	"	"	"	"	"
(10) 022	"	"	"	"	"	"	"

5. Remarks: CEIC Contract P-1008-L

CERTIFICATE OF COMPLIANCE

We certify that the statements made in this report are correct and that these components supports conform to the rules of construction of the ASME Code for Nuclear Power Plant Components, Section III, Division 1, Edition 1974, Addenda Winter 1976 (Date)
Code Case No. 1644-4, 1682-1, 1706.
Date 30 Sept. 1978 Signed E-Systems, Inc., Montek Div. (Manufacturer) by W.S. Enright
Our ASME Certificate of Authorization No. 1356 to use the NPT (NPT)
Symbol expires 1 March 1979 (Date).

CERTIFICATION OF DESIGN

Design Information on File at E-Systems, Inc., Montek Division, Salt Lake City, Utah
Stress Report or Load Capacity Data Sheets on File at: E-Systems, Inc., Montek Division, Salt Lake City, Utah
Design Specifications Certified by (1) Robert Lee Warren III PE State Utah Reg. No. 3942.
Stress Analysis Report or Load Capacity Data Sheets Certified by (1) Robert Lee Warren III
PE State Utah Reg. No. 3942.
(1) List name only, signature not required.

*Supplemental sheets in form of lists, sketches or drawings may be used provided (1) size is 8½ in., (2) information in items 1, 2, 4c, 4g on this data report is included on each sheet, and (3) each sheet is numbered and number of sheets is recorded at top of this form.

(1/78) This form (E00075) is available from the Order Dept., ASME, 345 E. 47 St., New York, N.Y. 10017

RPD-QC DHB 7-26-79

PAGE NO. 2J

FORM NF-1 (Back)

CERTIFICATE OF SHOP INSPECTION

I, the undersigned, holding a valid commission issued by the National Board of Boiler and Pressure Vessel Inspectors and the State or Province of Utah and employed by Royal Indemnity Ins. Co of New York, New York have inspected the component supports described in this Manufacturers' Data Report on September 30, 1978 and state that to the best of my knowledge and belief the Manufacturer has constructed these component supports in accordance with the ASME Code for Nuclear Power Plant Components.

By signing this certificate, neither the Inspector nor his employer makes any warranty, expressed or implied, concerning the component supports described in this Manufacturers' Data Report. Furthermore, neither the Inspector nor his employer shall be liable in any manner for any personal injury or property damage or a loss of any kind arising from or connected with this inspection.

Date 9/30/78

Signed A. L. Rockelman Commissions Utah 2
(Nat'l Bd., State, Prov., and No.)

CERTIFICATION OF FIELD INSPECTION

I, the undersigned, holding a valid commission issued by the National Board of Boiler and Pressure Vessel Inspectors and the State or Province of _____ and employed by _____ of _____ have compared the statements in this Manufacturers' Data Report with the described component supports and state that the parts referred to as data items _____, not included in the certificate of shop inspection, have been inspected by me and that to the best of my knowledge and belief the Manufacturer has constructed these component supports in accordance with the ASME Code for Nuclear Power Plant Components.

By signing this certificate neither the Inspector nor his employer makes any warranty, expressed or implied, concerning the component supports described in this Manufacturers' Data Report. Furthermore, neither the Inspector nor his employer shall be liable in any manner for any personal injury or property damage or a loss of any kind arising from or connected with this inspection.

Date _____.

Signed _____ Commissions _____
(Nat'l Bd., State, Prov., and No.)

1B33-0117

NIS-2/NR-1 OWNER'S REPORT FOR REPAIRS OR REPLACEMENTS

As required by the Provisions of the ASME Code Section XI

PNPP No. 9308 Rev. 9/11/00 NQI-1741

1. Owner: FIRSTENERGY CORP.
10 Center Road, Perry, Ohio 44081

Date 05/02/03
Sheet 1 of 3

2. Plant: Perry Nuclear Power Plant (PNPP)
10 Center Road, Perry, Ohio 44081

Unit 1
01-016599-000, R-0
(Repair Org. P.O. No., etc.)

3. Work Performed By: FIRSTENERGY Nuclear Operating Company PNPP
10 Center Road, Perry, Ohio 44081

Type Code Symbol Stamp NR
Authorization No. 33
Expiration Date 9-26-05

4. Identification of System: Reactor Recirculation System Pump "A"

5. (a) Applicable Construction Code: ASME Sec III, Subsection , NF-1 ,1974 Edition
NAME/SECTION/DIVISION/CLASS

Winter 19 75 Addenda Code Case(s) 1728, 1644-4

(b) Construction Code used for repairs, modifications, or replacements: 1974 (Edition) W75 (Addenda) N/A (Code Case(s))

(c) ASME Code Section XI applicable for Inservice Inspection: 1989 (Edition) N/A (Addenda) N/A (Code Case(s))

(d) Applicable Edition of Section XI Utilized for Repairs, Modification, or Replacements:

19 89 , N/A 19 N/A Addenda N/A
Code Case(s)

(e) Design Responsibilities FIRSTENERGY Nuclear Operating Company

6. Identification of Components Repaired, Modified, or Replacement Components

Name of Component	Name of Manufacturer	Manufacturer Serial No.	Nat. Board No.	Other ID.	Year Built	Repair, Replacement, or Modification	ASME Code Stamped
Support	E-Systems	B33	None	1B33-G7070A	1978	Replacement	Yes

7. Description of Work: Replaced Snubber 1B33-G006-S375A, S/N 056 with S/N 006 using the Piston Rod Assembly from removed snubber 056

8. Test Conducted: Hydrostatic- ☐ Pneumatic- ☐ Nominal Operating Pressure- ☐ Other- ☐

Pressure N/A psi Test Temperature N/A degrees F Code Case(s) N/A

NIS-2/NR-1 OWNER'S REPORT FOR REPAIRS OR REPLACEMENTS (Back)

PNPP No. 9308 Rev. 9/11/00 NQI-1741

9. Remarks:)

NO NAMEPLATE/STAMPING PERFORMED DUE TO THE INTERFACE CONTROLS OF RA-2370 BEING IN EFFECT AND JURISDICTIONAL AUTHORITY CONCURRENCE HAVING BEEN RECEIVED.

Note: Attach all applicable Manufacturer's Data Reports. Supplemental sheets such as lists, sketches, or drawings may be used, provided (1) size is 8 1/2 in. x 11 in., (2) information in items 1 through 6 of this report is included on each sheet, and (3) each sheet is numbered and the number of sheets is recorded on the front of this form.

CERTIFICATE OF COMPLIANCE

I, Lester J. Erbacher, certify that to the best of my knowledge and belief the statements made in this report are correct and the repair, modification or replacement of the items described above conforms to Section XI of the ASME Code and to the National Board Inspection Code "NR" rules.

National Board Certificate of Authorization No. 33 to use the "NR stamp expires 9-26, 20 05

Date May 2, 20 03 Signed FENOC-PNPP (name of repair organization) (authorized representative) QE (title)

CERTIFICATE OF INSPECTION/INSERVICE INSPECTION

I, Thomas G. Laps, holding a valid commission issued by The National Board of Boiler and Pressure Vessel Inspectors and certificate of competency issued by the jurisdiction of OHIO and employed by Hartford Steam Boiler Ct. of Hartford, Conn. have inspected the repair, modification or replacement described in this report on May 2, 20 03 and state that to the best of my knowledge and belief, this repair, modification or replacement has been completed in accordance with Section XI of the ASME Code and the National Board Inspection Code "NR" rules.

By signing this certificate, neither the undersigned nor my employer makes any warranty, expressed or implied, concerning the work described in this report. Furthermore, neither the undersigned nor my employer shall be liable in any manner for any personal injury, property damage or loss of any kind arising from or connected with this inspection.

Date May 2, 20 2003 Signed Thomas G. Laps (inspector) Commissions NB 9330 "N" "I" "A" Ohio Comm. (National Board (include endorsements), and jurisdiction, and no.)

1B33-117
2 of 3

mR131321F

FORM NF-1 MANUFACTURERS' DATA REPORT FOR COMPONENT SUPPORTS*
As Required by the Provisions of the ASME Code Rules, Section III, Division 1

1. Manufactured by E-Systems, Inc., Montek Division, Salt Lake City, Utah
(Name and address of manufacturer)

2. Manufacturer for General Electric Company, San Jose, California
(Name and address of purchaser or owner)

3. Location of Installation Perry 1 Nuclear Power Plant, Recirc. System, North Perry, Ohio

4. Identification

(a) Component Support I.D. No.	(b) Canadian Registration No.	(c) Applicable Drawings with Last Rev. & Date	(d) Stress Report or Load Capacity Data Sheet	(e) Type of Component Support	(f) Class	(g) Nat'l Board No.	(h) Year Built
(1) 265	N/A	152605A	LCD152000-602-7	Linear	I	None	1978
(2) 266	"	"	"	"	"	"	"
(3) 267	"	"	"	"	"	"	"
(4) 268	"	"	"	"	"	"	"
(5) 279	"	"	"	"	"	"	"
(6) 280	"	"	"	"	"	"	"
(7) 053	"	152610	LCD152000-602-8	"	"	"	"
(8) 054	"	"	"	"	"	"	"
(9) 055	"	"	"	"	"	"	"
(10) 056	"	"	"	"	"	"	"

5. Remarks: CEIC Contract P-1008-L

CERTIFICATE OF COMPLIANCE

We certify that the statements made in this report are correct and that these components supports conform to the rules of construction of the ASME Code for Nuclear Power Plant Components, Section III, Division 1, Edition 1974 Addenda Winter 1976 (Date) Code Case No. 1644-4, 1682-1, 1706.

Date 30 Sept. 1978 Signed E-Systems, Inc., Montek Div. (Manufacturer) by W.S. Enright

Our ASME Certificate of Authorization No. 1356 to use the NPT (NPT)

Symbol expires 1 March 1979 (Date).

CERTIFICATION OF DESIGN

Design Information on File at E-Systems, Inc., Montek Division, Salt Lake City, Utah

Stress Report or Load Capacity Data Sheets on File at: E-Systems, Inc., Montek Division, Salt Lake City, Utah

Design Specifications Certified by (1) Robert Lee Warren III PE State Utah Reg. No. 3942.

Stress Analysis Report or Load Capacity Data Sheets Certified by (1) Robert Lee Warren III

PE State Utah Reg. No. 3942.

(1) List name only, signature not required.

*Supplemental sheets in form of lists, sketches or drawings may be used provided (1) size is 8½ in., (2) information in items 1, 2, 4c, 4d on this data report is included on each sheet, and (3) each sheet is numbered and number of sheets is recorded at top of this form.

(1/76) This form (E00075) is available from the Order Dept., ASME, 345 E. 47 St., New York, N.Y. 10017

BWRPD-QC DHB 7-26-79

PAGE NO. 2-3

FORM NF-1 (Back)

CERTIFICATE OF SHOP INSPECTION

I, the undersigned, holding a valid commission issued by the National Board of Boiler and Pressure Vessel Inspectors and the State or Province of Utah and employed by Royal Indemnity Ins. Co of New York, New York, have inspected the component supports described in this Manufacturers' Data Report on September 30, 1978 and state that to the best of my knowledge and belief the Manufacturer has constructed these component supports in accordance with the ASME Code for Nuclear Power Plant Components.

By signing this certificate, neither the Inspector nor his employer makes any warranty, expressed or implied, concerning the component supports described in this Manufacturers' Data Report. Furthermore, neither the Inspector nor his employer shall be liable in any manner for any personal injury or property damage or a loss of any kind arising from or connected with this inspection.

Date 9/30/78.

Signed A. L. Rockholm Commissions Utah 2
(Nat'l Bd., State, Prov., and No.)

CERTIFICATION OF FIELD INSPECTION

I, the undersigned, holding a valid commission issued by the National Board of Boiler and Pressure Vessel Inspectors and the State or Province of _____ and employed by _____ of _____ have compared the statements in this Manufacturers' Data Report with the described component supports and state that the parts referred to as data items _____ not included in the certificate of shop inspection, have been inspected by me and that to the best of my knowledge and belief the Manufacturer has constructed these component supports in accordance with the ASME Code for Nuclear Power Plant Components.

By signing this certificate neither the Inspector nor his employer makes any warranty, expressed or implied, concerning the component supports described in this Manufacturers' Data Report. Furthermore, neither the Inspector nor his employer shall be liable in any manner for any personal injury or property damage or a loss of any kind arising from or connected with this inspection.

Date _____.

Signed _____ Commissions _____
(Nat'l Bd., State, Prov., and No.)

(CORRECTED COPY)

MR 1069542

1B33-117 3 of 3

FORM NF-1 MANUFACTURERS' DATA REPORT FOR COMPONENT SUPPORTS
As Required by the Provisions of the ASME Code Rules, Section III, Division 1

1. Manufactured by E-Systems, Inc., Montek Division, Salt Lake City, UT (Name and address of manufacturer)

2. Manufactured for General Electric Company, San Jose, California (Name and address of purchaser or owner)

3. Location of Installation Black Fox 1 RES, Tulsa, Oklahoma 74102

4. Identification

	(a) Component Support Type No.	(b) Canadian Registration No.	(c) Applicable Drawings with Last Rev. & Date	(d) Stress Report or Load Capacity Data Sheet	(e) Type of Component Support	(f) Class	(g) Nat'l Board No.	(h) Year Built
(1)	(006)	N/A	167310 (1/76)	CD152000-602	Linear	1	None	1981
(2)	(005)							
(3)	018							
(4)	040							
(5)	039							
(6)	042							
(7)	041							
(8)								
(9)								
(10)								

5. Remarks To correct clerical errors. Added 1 [illegible] 12/8/1982

CERTIFICATE OF COMPLIANCE

We certify that the statements made in this report are correct and that these components support conform to the rules of construction of the ASME Code for Nuclear Power Plant Components, Section III, Division 1, Edition 1977, Addenda Winter 1977, Code Case No. 1644-8, 1682, 1706, N242-1 (Date)

Date Dec. 31, 1981 Signed E-Systems, Inc., Montek Div. (Manufacturer) by J. Lynch

Our ASME Certificate of Authorization No. 1356 to use the NPT (Symbol) stamp

Expires 1 March 1982 (Date)

CERTIFICATION OF DESIGN

Design Information on File at E-Systems, Inc., Montek Division, Salt Lake City, UT

Stress Report or Load Capacity Data Sheets on File at: E-Systems, Inc., Montek Division, Salt Lake City, UT

Design Specifications Certified by (1) M.D. Potter PE State CA

Reg. No. 25904

Stress Analysis Report or Load Capacity Data Sheets Certified by (1) Robert Lee Warren III

PE State Utah Reg. No. 3942

(1) List name only, signature not required.

*Supplemental sheets in form of lists, sketches or drawings may be used provided (1) size is 8½ in., (2) information in items 1, 2, 4c, 4e on this data report is included on each sheet, and (3) each sheet is numbered and number of sheets is recorded at top of this form.

(1/76) This form (E00075) is available from the Order Dept., ASME, 345 E. 47 St., New York, N.Y. 10017

PAGE NO. 2-1

FORM NF-1 (Back)

CERTIFICATE OF SHOP INSPECTION

I, the undersigned, holding a valid commission issued by the National Board of Boiler and Pressure Vessel Inspectors and the State or Province of Utah and employed by Royal Globe Ins of New York, New York have inspected the component supports described in this Manufacturers' Data Report on Dec. 11, 1981 and state that to the best of my knowledge and belief the Manufacturer has constructed these component supports in accordance with the ASME Code for Nuclear Power Plant Components.

By signing this certificate neither the Inspector nor his employer makes any warranty, expressed or implied, concerning the component supports described in this Manufacturers' Data Report. Furthermore, neither the Inspector nor his employer shall be liable in any manner for any personal injury or property damage or a loss of any kind arising from or connected with this inspection.

Date 11 Dec. 1981

Signed [illegible] Commissions Utah 2
(Nat'l Bd. State, Prov. and No.)

CERTIFICATION OF FIELD INSPECTION

I, the undersigned, holding a valid commission issued by the National Board of Boiler and Pressure Vessel Inspectors and the State or Province of _____ and employed by _____ of _____ have compared the statements in this Manufacturers' Data Report with the described component supports and state that the parts referred to as data items _____ not included in the certificate of shop inspection, have been inspected by me and that to the best of my knowledge and belief, the Manufacturer has constructed these component supports in accordance with the ASME Code for Nuclear Power Plant Components.

By signing this certificate neither the Inspector nor his employer makes any warranty, expressed or implied, concerning the component supports described in this Manufacturers' Data Report. Furthermore, neither the Inspector nor his employer shall be liable in any manner for any personal injury or property damage or a loss of any kind arising from or connected with this inspection.

Date _____

Signed _____ Commissions _____
(Nat'l Bd. State, Prov. and No.)

OCT 6 1982

F NO. 2-G

1B33-118

NIS-2/NR-1 OWNER'S REPORT FOR REPAIRS OR REPLACEMENTS

As required by the Provisions of the ASME Code Section XI

PNPP No. 9308 Rev. 9/11/00 NQI-1741

1. Owner: FIRSTENERGY CORP.
10 Center Road, Perry, Ohio 44081

Date 05/02/03
Sheet 1 of 3

2. Plant: Perry Nuclear Power Plant (PNPP)
10 Center Road, Perry, Ohio 44081

Unit 1
01-016598-000, R-0
(Repair Org. P.O. No., etc.)

3. Work Performed By: FIRSTENERGY Nuclear Operating Company PNPP
10 Center Road, Perry, Ohio 44081

Type Code Symbol Stamp NR
Authorization No. 33
Expiration Date 9-26-05

4. Identification of System: Reactor Recirculation System Pump "A"

5. (a) Applicable Construction Code: ASME Sec III, Subsection , NF-1 ,1974 Edition
NAME/SECTION/DIVISION/CLASS

Winter 19 75 Addenda Code Case(s) 1728, 1644-4

(b) Construction Code used for repairs, modifications, or replacements: 1974 (Edition) W75 (Addenda) N/A (Code Case(s))

(c) ASME Code Section XI applicable for Inservice Inspection: 1989 (Edition) N/A (Addenda) N/A (Code Case(s))

(d) Applicable Edition of Section XI Utilized for Repairs, Modification, or Replacements:
19 89 , N/A 19 N/A Addenda N/A (Code Case(s))

(e) Design Responsibilities FIRSTENERGY Nuclear Operating Company

6. Identification of Components Repaired, Modified, or Replacement Components

Name of Component	Name of Manufacturer	Manufacturer Serial No.	Nat. Board No.	Other ID.	Year Built	Repair, Replacement, or Modification	ASME Code Stamped
Support	E-Systems	B33	None	1B33-G7069A	1978	Replacement	Yes

7. Description of Work: Replaced Snubber 1B33-G006-374A, S/N 057 with S/N 005 which was rebuilt using the Piston Rod assembly from S/N 055

8. Test Conducted: Hydrostatic- ☐ Pneumatic- ☐ Nominal Operating Pressure- ☐ Other- ☐
Pressure N/A psi Test Temperature N/A degrees F Code Case(s) N/A

NIS-2/NR-1 OWNER'S REPORT FOR REPAIRS OR REPLACEMENTS (Back)

PNPP No. 9308 Rev. 9/11/00 NQI-1741

9. Remarks:

NO NAMEPLATE/STAMPING PERFORMED DUE TO THE INTERFACE CONTROLS OF RA-2370 BEING IN EFFECT AND JURISDICTIONAL AUTHORITY CONCURRENCE HAVING BEEN RECEIVED.

Note: Attach all applicable Manufacturer's Data Reports. Supplemental sheets such as lists, sketches, or drawings may be used, provided (1) size is 8 1/2 in. x 11 in., (2) information in items 1 through 6 of this report is included on each sheet, and (3) each sheet is numbered and the number of sheets is recorded on the front of this form.

CERTIFICATE OF COMPLIANCE

I, Lester J. Erbacher, certify that to the best of my knowledge and belief the statements made in this report are correct and the repair, modification or replacement of the items described above conforms to Section XI of the ASME Code and to the National Board Inspection Code "NR" rules.

National Board Certificate of Authorization No. 33 to use the "NR stamp expires 9-26, 20 05

Date May 2, 20 03 Signed FENOC-PNPP (name of repair organization) (authorized representative) QE (title)

CERTIFICATE OF INSPECTION/INSERVICE INSPECTION

I, Thomas G. Laps, holding a valid commission issued by The National Board of Boiler and Pressure Vessel Inspectors and certificate of competency issued by the jurisdiction of OHIO and employed by Hartford Steam Boiler Ct. of Hartford, Conn. have inspected the repair, modification or replacement described in this report on May 2, 20 03 and state that to the best of my knowledge and belief, this repair, modification or replacement has been completed in accordance with Section XI of the ASME Code and the National Board Inspection Code "NR" rules.

By signing this certificate, neither the undersigned nor my employer makes any warranty, expressed or implied, concerning the work described in this report. Furthermore, neither the undersigned nor my employer shall be liable in any manner for any personal injury, property damage or loss of any kind arising from or connected with this inspection.

Date May 2, 20 2003 Signed (inspector) Commissions NB 9330 "N" "I" "A" Ohio Comm. (National Board (include endorsements), and jurisdiction, and no.)

(CORRECTED COPY) 1833-118 2 of 3

FORM NF-1 MANUFACTURERS' DATA REPORT FOR COMPONENT SUPPORTS*

As Required by the Provisions of the ASME Code Rules, Section III, Division 1

1. Manufactured by E-Systems, Inc., Montek Division, Salt Lake City, UT (Name and address of manufacturer)

2. Manufactured for General Electric Company, San Jose, California (Name and address of purchaser or owner)

3. Location of Installation Black Fox 1 R.S., Tulsa, Oklahoma 74102

4. Identification

	(a) Component Support I.D. No.	(b) Canadian Registration No.	(c) Applicable Drawings with Last Rev. & Date	(d) Stress Report or Load Capacity Data Sheet	(e) Type of Component Support	(f) Class	(g) Nat'l Board No.	(h) Year Built
(1)	0069	N/A	157510(N/C)	LCD152000-602	Linear	1	None	1981
(2)	0053	"	"	"	"	"	"	"
(3)	048	"	"	"	"	"	"	"
(4)	040	"	"	"	"	"	"	"
(5)	039	"	"	"	"	"	"	"
(6)	042	"	"	"	"	"	"	"
(7)	041	"	"	"	"	"	"	"
(8)								
(9)								
(10)								

5. Remarks: *-To correct clerical error, Added -1 [illegible] 12/28/82

CERTIFICATE OF COMPLIANCE

We certify that the statements made in this report are correct and that these components supports conform to the rules of construction of the ASME Code for Nuclear Power Plant Components, Section III, Division 1, Edition 1977, Addenda Winter 1977 (Date), Code Case No. 1644-8, 1682-1, 1706, N242-1.*

Date Dec. 11, 1981 Signed E-Systems, Inc., Montek Div (Manufacturer) by J. Lynch

Our ASME Certificate of Authorization No. 1356 to use the NPT (NPT) Symbol expires 1 March 1982 (Date).

OCT 28 1982

CERTIFICATION OF DESIGN

Design Information on File at E-Systems, Inc., Montek Division, Salt Lake City, UT

Stress Report or Load Capacity Data Sheets on File at: E-Systems, Inc., Montek Division, Salt Lake City, UT

Design Specifications Certified by (1) M.D. Potter PE State CA

Reg. No. 25904.

Stress Analysis Report or Load Capacity Data Sheets Certified by (1) Robert Lee Warren III

PE State Utah Reg. No. 3942.

(1) List name only, signature not required.

*Supplemental sheets in form of lists, sketches or drawings may be used provided (1) size is 8½ in., (2) information in items 1, 2, 4c, 4e on this data report is included on each sheet, and (3) each sheet is numbered and number of sheets is recorded at top of this form.

(1/76) This form (E00075) is available from the Order Dept., ASME, 345 E. 47 St., New York, N.Y. 10017

PAGE NO. 2-F

FORM NF-1 (Back)

CERTIFICATE OF SHOP INSPECTION

I, the undersigned, holding a valid commission issued by the National Board of Boiler and Pressure Vessel Inspectors and the State or Province of Utah and employed by Royal Globe Ins. of New York, New York have inspected the component supports described in this Manufacturers' Data Report on Dec. 11, 1981 and state that to the best of my knowledge and belief the Manufacturer has constructed these component supports in accordance with the ASME Code for Nuclear Power Plant Components.

By signing this certificate, neither the Inspector nor his employer makes any warranty, expressed or implied, concerning the component supports described in this Manufacturers' Data Report. Furthermore, neither the Inspector nor his employer shall be liable in any manner for any personal injury or property damage or a loss of any kind arising from or connected with this inspection.

Date 11 Dec. 1981

Signed [illegible] Commissions Utah 2
(Nat'l Bd., State, Prov., and No.)

CERTIFICATION OF FIELD INSPECTION

I, the undersigned, holding a valid commission issued by the National Board of Boiler and Pressure Vessel Inspectors and the State or Province of _____ and employed by _____ of _____ have compared the statements in this Manufacturers' Data Report with the described component supports and state that the parts referred to as data items _____ not included in the certificate of shop inspection, have been inspected by me and that to the best of my knowledge and belief the Manufacturer has constructed these component supports in accordance with the ASME Code for Nuclear Power Plant Components.

By signing this certificate neither the Inspector nor his employer makes any warranty, expressed or implied, concerning the component supports described in this Manufacturers' Data Report. Furthermore, neither the Inspector nor his employer shall be liable in any manner for any personal injury or property damage or a loss of any kind arising from or connected with this inspection.

Date 12/ _____

Signed _____ Commissions _____
(Nat'l Bd., State, Prov., and No.)

FE NO. 2-G

1B33-118
3 of 3

FORM NF-1 MANUFACTURERS' DATA REPORT FOR COMPONENT SUPPORTS*
As Required by the Provisions of the ASME Code Rules, Section III, Division 1

1. Manufactured by E-Systems, Inc., Montek Division, Salt Lake City, Utah
(Name and address of manufacturer)

2. Manufacturer for General Electric Company, San Jose, California
(Name and address of purchaser or owner)

3. Location of Installation Perry 1 Nuclear Power Plant, Recirc. System, North Perry, Ohio

4. Identification

(a) Component Support I.D. No.	(b) Canadian Registration No.	(c) Applicable Drawings with Last Rev. & Date	(d) Stress Report or Load Capacity Data Sheet	(e) Type of Component Support	(f) Class	(g) Nat'l Board No.	(h) Year Built
(1) 265	N/A	152605A	LCD152000-602-7	Linear	I	None	1978
(2) 266	"	"	"	"	"	"	"
(3) 267	"	"	"	"	"	"	"
(4) 268	"	"	"	"	"	"	"
(5) 279	"	"	"	"	"	"	"
(6) 280	"	"	"	"	"	"	"
(7) 053	"	152610	LCD152000-602-8	"	"	"	"
(8) 054	"	"	"	"	"	"	"
(9) 055	"	"	"	"	"	"	"
(10) 056	"	"	"	"	"	"	"

5. Remarks: CEIC Contract P-1008-L

CERTIFICATE OF COMPLIANCE

We certify that the statements made in this report are correct and that these components supports conform to the rules of construction of the ASME Code for Nuclear Power Plant Components, Section III, Division 1, Edition 1974, Addenda Winter 1976 (Date), Code Case No. 1644-4, 1682-1, 1706.

Date 30 Sept. 1978 Signed E-Systems, Inc., Montek Div. (Manufacturer) by W. S. Enright

Our ASME Certificate of Authorization No. 1356 to use the NPT (NPT)

Symbol expires 1 March 1979 (Date).

CERTIFICATION OF DESIGN

Design Information on File at E-Systems, Inc., Montek Division, Salt Lake City, Utah

Stress Report or Load Capacity Data Sheets on File at: E-Systems, Inc., Montek Division, Salt Lake City, Utah

Design Specifications Certified by (1) Robert Lee Warren III PE State Utah Reg. No. 3942.

Stress Analysis Report or Load Capacity Data Sheets Certified by (1) Robert Lee Warren III

PE State Utah Reg. No. 3942.

(1) List name only, signature not required.

*Supplemental sheets in form of lists, sketches or drawings may be used provided (1) size is 8½ in., (2) information in items 1, 2, 4c, 4g on this data report is included on each sheet, and (3) each sheet is numbered and number of sheets is recorded at top of this form.

(1/76) This form (E00075) is available from the Order Dept., ASME, 345 E. 47 St., New York, N.Y. 10017

BWRPD-PC DHB 7-26-79

PAGE NO. 2

FORM NF-1 (Back)

CERTIFICATE OF SHOP INSPECTION

I, the undersigned, holding a valid commission issued by the National Board of Boiler and Pressure Vessel Inspectors and the State or Province of Utah and employed by Royal Indemnity Ins. Co of New York, New York, have inspected the component supports described in this Manufacturers' Data Report on September 30, 1978 and state that to the best of my knowledge and belief the Manufacturer has constructed these component supports in accordance with the ASME Code for Nuclear Power Plant Components.

By signing this certificate, neither the Inspector nor his employer makes any warranty, expressed or implied, concerning the component supports described in this Manufacturers' Data Report. Furthermore, neither the Inspector nor his employer shall be liable in any manner for any personal injury or property damage or a loss of any kind arising from or connected with this inspection.

Date 9/30/78.

Signed A. L. Rockelman Commissions Utah 2
(Nat'l Bd., State, Prov., and No.)

CERTIFICATION OF FIELD INSPECTION

I, the undersigned, holding a valid commission issued by the National Board of Boiler and Pressure Vessel Inspectors and the State or Province of _____ and employed by _____ of _____ have compared the statements in this Manufacturers' Data Report with the described component supports and state that the parts referred to as data items _____ not included in the certificate of shop inspection, have been inspected by me and that to the best of my knowledge and belief the Manufacturer has constructed these component supports in accordance with the ASME Code for Nuclear Power Plant Components.

By signing this certificate neither the Inspector nor his employer makes any warranty, expressed or implied, concerning the component supports described in this Manufacturers' Data Report. Furthermore, neither the Inspector nor his employer shall be liable in any manner for any personal injury or property damage or a loss of any kind arising from or connected with this inspection.

Date _____.

Signed _____ Commissions _____
(Nat'l Bd., State, Prov., and No.)

1B33-119

NIS-2/NR-1 OWNER'S REPORT FOR REPAIRS OR REPLACEMENTS

As required by the Provisions of the ASME Code Section XI

PNPP No. 9308 Rev. 9/11/00 NQI-1741

1. Owner: FIRSTENERGY CORP. Date 05/02/03
10 Center Road, Perry, Ohio 44081 Sheet 1 of 2

2. Plant: Perry Nuclear Power Plant (PNPP) Unit 1
10 Center Road, Perry, Ohio 44081 00-002079-000, R-0
(Repair Org. P.O. No., etc.)

3. Work Performed By: FIRSTENERGY Nuclear Operating Company PNPP Type Code Symbol Stamp NR
10 Center Road, Perry, Ohio 44081 Authorization No. 33
Expiration Date 9-26-05

4. Identification of System: Reactor Recirculation System Pump "A"

5. (a) Applicable Construction Code: ASME Sec III, Subsection , NF-1 ,1974 Edition
NAME/SECTION/DIVISION/CLASS

Winter 19 75 Addenda Code Case(s) 1728, 1644-4

(b) Construction Code used for repairs, modifications, or replacements: 1974 (Edition) W75 (Addenda) N/A (Code Case(s))

(c) ASME Code Section XI applicable for Inservice Inspection: 1989 (Edition) N/A (Addenda) N/A (Code Case(s))

(d) Applicable Edition of Section XI Utilized for Repairs, Modification, or Replacements:

19 89 , N/A 19 N/A Addenda N/A (Code Case(s))

(e) Design Responsibilities FIRSTENERGY Nuclear Operating Company

6. Identification of Components Repaired, Modified, or Replacement Components

Name of Component	Name of Manufacturer	Manufacturer Serial No.	Nat. Board No.	Other ID.	Year Built	Repair, Replacement, or Modification	ASME Code Stamped
Support	E-Systems	B33	None	1B33-G7067A	1978	Replacement	Yes

7. Description of Work: Replaced Snubber 1B33-G006-S372A, S/N 055 with rebuilt S/N 023

8. Test Conducted: Hydrostatic- ☐ Pneumatic- ☐ Nominal Operating Pressure- ☐ Other- ☐
Pressure N/A psi Test Temperature N/A degrees F Code Case(s) N/A

NIS-2/NR-1 OWNER'S REPORT FOR REPAIRS OR REPLACEMENTS (Back)

PNPP No. 9308 Rev. 9/11/00 NQI-1741

9. Remarks: _____

NO NAMEPLATE/STAMPING PERFORMED DUE TO THE INTERFACE CONTROLS OF RA-2370 BEING IN EFFECT AND JURISDICTIONAL AUTHORITY CONCURRENCE HAVING BEEN RECEIVED.

Note: Attach all applicable Manufacturer's Data Reports. Supplemental sheets such as lists, sketches, or drawings may be used, provided (1) size is 8 1/2 in. x 11 in., (2) information in items 1 through 6 of this report is included on each sheet, and (3) each sheet is numbered and the number of sheets is recorded on the front of this form.

CERTIFICATE OF COMPLIANCE

I, Lester J. Erbacher, certify that to the best of my knowledge and belief the statements made in this report are correct and the repair, modification or replacement of the items described above conforms to Section XI of the ASME Code and to the National Board Inspection Code "NR" rules.

National Board Certificate of Authorization No. 33 to use the "NR stamp expires 9-26, 20 05

Date May 2, 20 03 Signed FENOC-PNPP (name of repair organization) (authorized representative) QE (title)

CERTIFICATE OF INSPECTION/INSERVICE INSPECTION

I, Thomas G. Laps, holding a valid commission issued by The National Board of Boiler and Pressure Vessel Inspectors and certificate of competency issued by the jurisdiction of OHIO and employed by Hartford Steam Boiler Ct. of Hartford, Conn. have inspected the repair, modification or replacement described in this report on May 2, 20 03 and state that to the best of my knowledge and belief, this repair, modification or replacement has been completed in accordance with Section XI of the ASME Code and the National Board Inspection Code "NR" rules.

By signing this certificate, neither the undersigned nor my employer makes any warranty, expressed or implied, concerning the work described in this report. Furthermore, neither the undersigned nor my employer shall be liable in any manner for any personal injury, property damage or loss of any kind arising from or connected with this inspection.

Date May 2, 20 2003 Signed (inspector) Commissions NB 9330 "N" "I" "A" Ohio Comm. (National Board (include endorsements), and jurisdiction, and no.)

03-119
2-6B2
2/5/03

(CORRECTED COPY)

FORM NF-1 MANUFACTURERS' DATA REPORT FOR COMPONENT SUPPORTS
As Required by the Provisions of the ASME Code Rules, Section III, Division 1

1. Manufactured by E-Systems, Inc., Montek Division, Salt Lake City, UT
(Name and address of manufacturer)

2. Manufactured for General Electric Company, San Jose, California
(Name and address of purchaser or owner)

3. Location of Installation Black Fox Recirculation System No. 2 Inola, Okla 94036

4. Identification

	(a) Component Support I.D. No.	(b) Canadian Registration No.	(c) Applicable Drawings with Last Rev. & Date	(d) Stress Report or Load Capacity Data Sheet	(e) Type of Component Support	(f) Class	(g) Nat'l Board No.	(h) Year Built
(1)	024	N/A	157510 (N/C)	1CD152000-602-14 near	"	1	None	1980
(2)	025	"	"	"	"	"	"	"
(3)	026	"	"	"	"	"	"	"
(4)	037	"	"	"	"	"	"	"
(5)	015	"	"	"	"	"	"	"
(6)	028	N/A	152210(E)	"	"	"	"	"
(7)	010	"	"	"	"	"	"	"
(8)	313	"	"	"	"	"	"	"
(9)	040	"	"	"	"	"	"	"
(10)	039	"	"	"	"	"	"	"

5. Remarks: To correct clerical error. Added 1 [illegible]

CERTIFICATE OF COMPLIANCE

We certify that the statements made in this report are correct and that these components supports conform to the rules of construction of the ASME Code for Nuclear Power Plant Components, Section III, Division 1, Edition 1977 Addenda Winter 1977
Code Case No. 1644-8, 1682-1, 1706, N242-1*
Date Dec. 18, 1981 Signed E-Systems, Inc., Montek Div. (Manufacturer) J. Lynch (Date)
Our ASME Certificate of Authorization No. 1356 to use the NPT (NPT)
Symbol expires 1 March 1982 (Date)

GGM
OCT 26 1982

CERTIFICATION OF DESIGN

Design Information on File at E-Systems, Inc., Montek Division, Salt Lake City, UT

Stress Report or Load Capacity Data Sheets on File at: E-Systems, Inc., Montek Division, Salt Lake C[illegible], UT

Design Specifications Certified by (1) M.D. Potter PE State CA

Reg. No. 25904

Stress Analysis Report or Load Capacity Data Sheets Certified by (1) Robert Lee Warren III

PE State Utah Reg. No. 3942

(1) List name only, signature not required.

*Supplemental sheets in form of lists, sketches or drawings may be used provided (1) size is 8½ in. x 11 in., (2) information in items 1, 2, 4c, 4d on this data report is included on each sheet, and (3) each sheet is numbered and number of sheets is recorded at top of this form.

(11/76) This form (ED00075) is available from the Order Dept., ASME, 345 E. 47 St., New York, N.Y. 10017

page 2 of 2

FORM NF-1 (Back)

CERTIFICATE OF SHOP INSPECTION

I, the undersigned, holding a valid commission issued by the National Board of Boiler and Pressure Vessel Inspectors and the State or Province of Utah and employed by Royal Globe Ins. of New York, New York have inspected the component supports described in this Manufacturers' Data Report on Dec. 18, 19 81 and state that to the best of my knowledge and belief, the Manufacturer has constructed these component supports in accordance with the ASME Code for Nuclear Power Plant Components.

By signing this certificate, neither the Inspector nor his employer makes any warranty, expressed or implied, concerning the component supports described in this Manufacturers' Data Report. Furthermore, neither the Inspector nor his employer shall be liable in any manner for any personal injury or property damage or a loss of any kind arising from or connected with this inspection.

Date 18 Dec. 1981

Signed [signature] Commissions Utah 2

(Nat'l Bd., State, Prov., and No.)

CERTIFICATION OF FIELD INSPECTION

I, the undersigned, holding a valid commission issued by the National Board of Boiler and Pressure Vessel Inspectors and the State or Province of _____ and employed by _____ of _____ have compared the statements in this Manufacturers' Data Report with the described component supports and state that the parts referred to as data items _____ not included in the certificate of shop inspection, have been inspected by me and that to the best of my knowledge and belief the Manufacturer has constructed these component supports in accordance with the ASME Code for Nuclear Power Plant Components.

By signing this certificate, neither the Inspector nor his employer makes any warranty, expressed or implied, concerning the component supports described in this Manufacturers' Data Report. Furthermore, neither the Inspector nor his employer shall be liable in any manner for any personal injury or property damage or a loss of any kind arising from or connected with this inspection.

Date _____

Signed _____ Commissions _____

(Nat'l Bd., State, Prov., and No.)

2-A

1B33-120

NIS-2/NR-1 OWNER'S REPORT FOR REPAIRS OR REPLACEMENTS

As required by the Provisions of the ASME Code Section XI

PNPP No. 9308 Rev. 9/11/00 NQI-1741

1. Owner: FIRSTENERGY CORP. Date 05/04/03
10 Center Road, Perry, Ohio 44081 Sheet 1 of 2

2. Plant: Perry Nuclear Power Plant (PNPP) Unit 1
10 Center Road, Perry, Ohio 44081 03-003803-000 R-0
(Repair Org. P.O. No., etc.)

3. Work Performed By: FIRSTENERGY Nuclear Operating Company PNPP Type Code Symbol Stamp NR
10 Center Road, Perry, Ohio 44081 Authorization No. 33
Expiration Date 9-26-05

4. Identification of System: 1B33 Reactor Recirculation System Pump "A"

5. (a) Applicable Construction Code: ASME Sec III, Subsection , NF-1 ,1974 Edition
NAME/SECTION/DIVISION/CLASS

Winter 19 75 Addenda Code Case(s) 1644-8, 1682-1, 1706, N242-1

(b) Construction Code used for repairs, modifications, or replacements: 1974 (Edition) W75 (Addenda) N/A (Code Case(s))

(c) ASME Code Section XI applicable for Inservice Inspection: 1989 (Edition) N/A (Addenda) N/A (Code Case(s))

(d) Applicable Edition of Section XI Utilized for Repairs, Modification, or Replacements:

19 89 , N/A 19 N/A Addenda N/A (Code Case(s))

(e) Design Responsibilities FIRSTENERGY Nuclear Operating Company

6. Identification of Components Repaired, Modified, or Replacement Components

Name of Component	Name of Manufacturer	Manufacturer Serial No.	Nat. Board No.	Other ID.	Year Built	Repair, Replacement, or Modification	ASME Code Stamped
Support	E-Systems	B33	None	1B33-G7067A	1978	Replacement	Yes

7. Description of Work: Removed 1B33-G006-S372A, (Serial Number 023) , replaced the Piston Rod assembly with new Pistion Rod Assembly Serial Number 8213 and reinstalled Serial Number 023..

8. Test Conducted: Hydrostatic- ☐ Pneumatic- ☐ Nominal Operating Pressure- ☐ Other- ☐
Pressure N/A psi Test Temperature N/A degrees F Code Case(s) N/A

NIS-2/NR-1 OWNER'S REPORT FOR REPAIRS OR REPLACEMENTS (Back)

PNPP No. 9308 Rev. 9/11/00 NQI-1741

9. Remarks: _____

NO NAMEPLATE/STAMPING PERFORMED DUE TO THE INTERFACE CONTROLS OF RA-2370 BEING IN EFFECT AND JURISDICTIONAL AUTHORITY CONCURRENCE HAVING BEEN RECEIVED.

Note: Attach all applicable Manufacturer's Data Reports. Supplemental sheets such as lists, sketches, or drawings may be used, provided (1) size is 8 1/2 in. x 11 in., (2) information in items 1 through 6 of this report is included on each sheet, and (3) each sheet is numbered and the number of sheets is recorded on the front of this form.

CERTIFICATE OF COMPLIANCE

I, Lester J. Erbacher, certify that to the best of my knowledge and belief the statements made in this report are correct and the repair, modification or replacement of the items described above conforms to Section XI of the ASME Code and to the National Board Inspection Code "NR" rules.

National Board Certificate of Authorization No. 33 to use the "NR stamp expires 9-26, 20 05

Date May 5, 20 03 Signed FENOC-PNPP (name of repair organization) (authorized representative) QE (title)

CERTIFICATE OF INSPECTION/INSERVICE INSPECTION

I, Thomas G. Laps, holding a valid commission issued by The National Board of Boiler and Pressure Vessel Inspectors and certificate of competency issued by the jurisdiction of OHIO and employed by Hartford Steam Boiler Ct. of Hartford, Conn. have inspected the repair, modification or replacement described in this report on May 5, 20 03 and state that to the best of my knowledge and belief, this repair, modification or replacement has been completed in accordance with Section XI of the ASME Code and the National Board Inspection Code "NR" rules.

By signing this certificate, neither the undersigned nor my employer makes any warranty, expressed or implied, concerning the work described in this report. Furthermore, neither the undersigned nor my employer shall be liable in any manner for any personal injury, property damage or loss of any kind arising from or connected with this inspection.

Date May 5, 20 03 Signed Thomas G. Laps (inspector) Commissions NB 9330 "N" "I" "A" Ohio Comm. (National Board (include endorsements), and jurisdiction, and no.)

FORM NF-2 NPT CERTIF TE HOLDERS' PARTIAL DATA REPORT FC ARTS FOR COMPONENT SUPPORT*
As Requi..u by the Provisions of the ASME Code Rules, Section III, Division 1

MLS 9P06564

Certified &
1. Manufactured by E-Systems, Inc., Montek Division, Salt Lake City, Utah 84119
(Name and address of NPT Certificate Holder)

2. Manufactured for General Electric Company, San Jose, California 95125
(Name and address of purchaser or owner)

3. Location of Installation Perry Nuclear Power Plant, North Perry, Ohio 44081

4.

(a) Part Serial No.	(b) Canadian Registration No.	(c) Part Drawing No.	(d) Description of Part	(e) Class	(f) National Board No.	(g) Year Built
(1) 6646	N/A	152107-100	Piston Rod End	1	None	1985
(2) 6666	"	"	"	"	"	"
(3) 8211	"	152110-100	"	"	"	"
(4) 8213	"	"	[illegible]		"	"
(5) 7325	"	152112-101	Adj. Rod End	"	"	"
(6) 7326	"	"	"	"	"	"
(7) 8206-B5	"	152113-101	"	"	"	"
(8) 8208-B5	"	"	"	"	"	"
(9) 6437	"	152115-101	"	"	"	"
(10) 6439	"	"	"	"	"	"

CERTIFICATE OF COMPLIANCE

We certify that the statements made in this report are correct and that these component support parts conform to the rules of construction of the ASME Code for Nuclear Power Plant Components, Section III, Division 1, Edition 1974, Addenda Winter 1976 (Date), Code Case no. 1644-4.

Date June 20, 19 85. Signed E-Systems, Inc., Montek Div (NPT Certificate Holder) by J. Lynch

Our ASME Certificate of Authorization No. 2563 to use the NPT (NPT) Symbol expires June 21, 1985 (Date)

CERTIFICATE OF SHOP INSPECTION

the undersigned, holding a valid commission issued by the National Board of Boiler and Pressure Vessel Inspectors and the State or ovince of Utah and employed by HSB I & I Co. of Hartford, Conn. have inspected the parts for the component supports described in this Data Report on June 20, 19 85; and state that to the best of my knowledge and belief the NPT Certificate Holder has constructed these mponent support parts in accordance with the ASME Code for Nuclear Power Plant Components.

signing this certificate, neither the Inspector nor his employer makes any warranty, expressed or implied, concerning the component supports described in this Data Report. Furthermore neither the Inspector nor his employer shall be liable manner for any personal injury or property damage or a loss of any kind arising from or connected with this inspection.

e 6/20/85

ed [signature] Commissions Ut. 91 (Nat'l Board State Province)

PERRY NUCLEAR POWER PLANT NOAD

1C11-035

NIS-2/NR-1 OWNER'S REPORT FOR REPAIRS OR REPLACEMENTS

As required by the Provisions of the ASME Code Section XI

PNPP No. 9308 Rev. 9/11/00 NQI-1741

1. Owner: FIRSTENERGY CORP.
10 Center Road, Perry, Ohio 44081

Date 6/26/03
Sheet 1 of 21 PR 7-7-03

2. Plant: Perry Nuclear Power Plant (PNPP)
10 Center Road, Perry, Ohio 44081

Unit 1
W.O. 01-10772
(Repair Org. P.O. No., etc.)

3. Work Performed By: FIRSTENERGY Nuclear Operating Company PNPP
10 Center Road, Perry, Ohio 44081

Type Code Symbol Stamp NR
Authorization No. 33
Expiration Date 9/26/2005

4. Identification of System: 1C11 Control Rod Drive System

5. (a) Applicable Construction Code: ASME Section III NC (NAME/SECTION/DIVISION/CLASS), 1974 Edition

Winter 19 75 Addenda Code Case(s) N-272, N-71-6, N-71-9, 1728, N-3, N-225 N-413

(b) Construction Code used for repairs, modifications, or replacements: 1974 (Edition) Winter 75 (Addenda) N/A (Code Case(s))

(c) ASME Code Section XI applicable for Inservice Inspection: 1989 (Edition) N/A (Addenda) N/A (Code Case(s))

(d) Applicable Edition of Section XI Utilized for Repairs, Modification, or Replacements:

19 89, N/A 19 N/A Addenda N/A (Code Case(s))

(e) Design Responsibilities FIRSTENERGY Nuclear Oprerating Company PNPP

6. Identification of Components Repaired, Modified, or Replacement Components

Name of Component	Name of Manufacturer	Manufacturer Serial No.	Nat. Board No.	Other ID.	Year Built	Repair, Replacement, or Modification	ASME Code Stamped
Hanger	Johnson Controls	1C11-0033-F	003	MK-1C11-F163A	1985	Replacement	Yes

7. Description of Work: Support MK-1C11-F163A was partially removed and re-welded using E-7018 3/32" weld rod HT# C40618.

8. Test Conducted: Hydrostatic- ☐ Pneumatic- ☐ Nominal Operating Pressure- ☐ Other- ☐

Pressure N/A psi Test Temperature N/A degrees F Code Case(s) _____

NIS-2/NR-1 OWNER'S REPORT FOR REPAIRS OR REPLACEMENTS (Back)

PNPP No. 9308 Rev. 9/11/00 NQI-1741

9. Remarks: None

NO NAMEPLATE/STAMPING PERFORMED DUE TO THE INTERFACE CONTROLS OF RA-2370 BEING IN EFFECT AND JURISDICTIONAL AUTHORITY CONCURRENCE HAVING BEEN RECEIVED.

Note: Attach all applicable Manufacturer's Data Reports. Supplemental sheets such as lists, sketches, or drawings may be used, provided (1) size is 8 1/2 in. x 11 in., (2) information in items 1 through 6 of this report is included on each sheet, and (3) each sheet is numbered and the number of sheets is recorded on the front of this form.

CERTIFICATE OF COMPLIANCE

I, David E. Lindquist, certify that to the best of my knowledge and belief the statements made in this report are correct and the repair, modification or replacement of the items described above conforms to Section XI of the ASME Code and to the National Board Inspection Code "NR" rules.

National Board Certificate of Authorization No. 33 to use the "NR stamp expires 26 Sept., 20 05

Date June 26, 20 03 Signed FENOC-PNPP (name of repair organization) David E. Lindquist (authorized representative) QE (title)

CERTIFICATE OF INSPECTION/INSERVICE INSPECTION

I, THOMAS G. LAPS, holding a valid commission issued by The National Board of Boiler and Pressure Vessel Inspectors and certificate of competency issued by the jurisdiction of OHIO and employed by Hartford Steam Boiler Ct. of Hartford, Conn. have inspected the repair, modification or replacement described in this report on May 5, 20 03 and state that to the best of my knowledge and belief, this repair, modification or replacement has been completed in accordance with Section XI of the ASME Code and the National Board Inspection Code "NR" rules.

By signing this certificate, neither the undersigned nor my employer makes any warranty, expressed or implied, concerning the work described in this report. Furthermore, neither the undersigned nor my employer shall be liable in any manner for any personal injury, property damage or loss of any kind arising from or connected with this inspection.

Date July 7, 20 03 Signed Thomas G. Laps (inspector) Commissions NB 9330 "N" "I" "A" Ohio Comm. (National Board (include endorsements), and jurisdiction, and no.)

1C41-030

NIS-2/NR-1 OWNER'S REPORT FOR REPAIRS OR REPLACEMENTS

As required by the Provisions of the ASME Code Section XI

PNPP No. 9308 Rev. 9/11/00 NQI-1741

1. Owner: FIRSTENERGY CORP.
10 Center Road, Perry, Ohio 44081
Date 9-9-02
Sheet 1 of 4

2. Plant: Perry Nuclear Power Plant (PNPP)
10 Center Road, Perry, Ohio 44081
Unit 1
00-9054 R/0
(Repair Org. P.O. No., etc.)

3. Work Performed By: FIRSTENERGY Nuclear Operating Company PNPP
10 Center Road, Perry, Ohio 44081
Type Code Symbol Stamp NR
Authorization No. 33
Expiration Date 9/26/2005

4. Identification of System: 1C41 Standby Liquid Control

5. (a) Applicable Construction Code: ASME Section III NB ,1971 Edition
NAME/SECTION/DIVISION/CLASS

Winter 19 72 Addenda Code Case(s) N/A

(b) Construction Code used for repairs, modifications, or replacements: 1971 (Edition) Winter 72 (Addenda) N/A (Code Case(s))

(c) ASME Code Section XI applicable for Inservice Inspection: 1989 (Edition) N/A (Addenda) N/A (Code Case(s))

(d) Applicable Edition of Section XI Utilized for Repairs, Modification, or Replacements:
19 89 , N/A 19 N/A Addenda N/A (Code Case(s))

(e) Design Responsibilities FIRSTENERGY Nuclear Oprerating Company PNPP

6. Identification of Components Repaired, Modified, or Replacement Components

Name of Component	Name of Manufacturer	Manufacturer Serial No.	Nat. Board No.	Other ID.	Year Built	Repair, Replacement, or Modification	ASME Code Stamped
Valve	Conax Corp.	N/A	112	N/A	1975	Replacement	Yes

7. Description of Work: Replaced primer/trigger assembly with Kit S/N 593EQ using trigger subassembly S/N 5870 and inlet fitting S/N 5845. The squib valve asset is 1C41-F004A.

8. Test Conducted: Hydrostatic- ☐ Pneumatic- ☐ Nominal Operating Pressure- ☐ Other- ☐
Pressure N/A psi Test Temperature N/A degrees F Code Case(s) N/A

NIS-2/NR-1 OWNER'S REPORT FOR REPAIRS OR REPLACEMENTS (Back)

PNPP No. 9308 Rev. 9/11/00 NQI-1741

9. Remarks:

NO NAMEPLATE/STAMPING PERFORMED DUE TO THE INTERFACE CONTROLS OF RA-2370 BEING IN EFFECT AND JURISDICTIONAL AUTHORITY CONCURRENCE HAVING BEEN RECEIVED.

Note: Attach all applicable Manufacturer's Data Reports. Supplemental sheets such as lists, sketches, or drawings may be used, provided (1) size is 8 1/2 in. x 11 in., (2) information in items 1 through 6 of this report is included on each sheet, and (3) each sheet is numbered and the number of sheets is recorded on the front of this form.

CERTIFICATE OF COMPLIANCE

I, Michael J Tepsick, certify that to the best of my knowledge and belief the statements made in this report are correct and the repair, modification or replacement of the items described above conforms to Section XI of the ASME Code and to the National Board Inspection Code "NR" rules.

National Board Certificate of Authorization No. 33 to use the "NR stamp expires 26 Sept, 20 05

Date 9 SEPT, 2002 Signed FENOC-PNPP (name of repair organization) [signature] (authorized representative) SR QUALITY TECH (title)

CERTIFICATE OF INSPECTION/INSERVICE INSPECTION

I, Thomas G Laps, holding a valid commission issued by The National Board of Boiler and Pressure Vessel Inspectors and certificate of competency issued by the jurisdiction of OHIO and employed by Factory Mutual Ins. Co. of Johnston, RI have inspected the repair, modification or replacement described in this report on SEPT. 9, 2002 and state that to the best of my knowledge and belief, this repair, modification or replacement has been completed in accordance with Section XI of the ASME Code and the National Board Inspection Code "NR" rules.

By signing this certificate, neither the undersigned nor my employer makes any warranty, expressed or implied, concerning the work described in this report. Furthermore, neither the undersigned nor my employer shall be liable in any manner for any personal injury, property damage or loss of any kind arising from or connected with this inspection.

Date 9/9, 2002 Signed Thomas G Laps (inspector) Commissions NB 9330 "N" "I" "A" Ohio Comm. (National Board (include endorsements), and jurisdiction, and no.)

1C41-030 SHEET 2 OF 4

FORM NV-1 MANUFACTURER'S DATA REPORT FOR NUCLEAR PUMPS OR VALVES

As Required by the Provisions of the ASME Code Rules

1. Manufactured by Conax Corporation, Buffalo, New York 14225 Order No. 7-53000
(Name & Address of Manufacturer)

2. Manufactured for General Electric Co., San Jose, Calif. Order No. 205-AE-282
(Name and Address)

3. Owner Unknown

4. Location of Plant Perry I

5. Pump or Valve Identification Explosive Actuated valve for Standby Liquid Control System

(7" O.D., 1-1/2" tube size)
(Unit Description of service for which equipment was designed)

(a) Drawing No. N20000 Prepared by Conax Corporation

(b) National Board No. 112

6. Design Conditions 1400 psi (Pressure) 150 °F (Temperature)

7. The material, design, construction, and workmanship complies with ASME Code Section III Class 1

Edition 1971 Addenda Date Winter 72 Case No. Not Applicable

	Mark No.	Material Spec. No.	Manufacturer	Remarks
(a) Castings				
(b) Forgings				

BEST AVAILABLE COPY

Mark No.	Material Spec. No.	Manufacturer	Size
(c) Bolting			
(d) Other Parts			
Valve Parts	SA 479	Conax Corp.	
Trigger Body	SA 479	Conax Corp.	
Ram	SA 564	Conax Corp.	
Inlet Fittings	SA 479	Conax Corp.	

9. Hydrostatic test 2800 psi.

CERTIFICATION OF DESIGN

Design information on file at General Electric Nuclear Energy Div., San Jose, Calif.

Stress analysis report on file at Conax Corporation, 2300 Walden Avenue, Buffalo, N.Y. 14225

Design specifications certified by J. Kelso (1) Prof. Eng. State Calif. Reg. No. 13738

Stress analysis report certified by Francis J. Domino (1) Prof. Eng. State N.Y. Reg. No. 36832

(1) Signature not required. List name only.

We certify that the statements made in this report are correct.

Date 2 1 19 75 Signed Conax Corporation (Manufacturer) By Richard L. Duroure

Certificate of Authorization No. N-829 expires June 17, 1977 Quality Assurance Manager

CERTIFICATE OF SHOP INSPECTION

I, the undersigned, holding a valid commission issued by the National Board of Boiler and Pressure Vessel Inspectors and/or the State of Province of National Board and employed by Lumbermens Mutual Casualty Co. of Chicago, Illinois have inspected the equipment described in this Data Report on 6/24/75 19 , and state that to the best of my knowledge and belief, the Manufacturer has constructed this equipment in accordance with the applicable Subsections of ASME Code, Section III.

By signing this certificate, neither the Inspector nor his employer makes any warranty, expressed or implied, concerning the equipment described in this Data Report. Furthermore, neither the Inspector nor his employer shall be liable in any manner for any personal injury or property damage or a loss of any kind arising from or connected with this inspection.

Date 6/24/75 19

(Inspector) Commissions PA 20 7254 NCE 7212 (National Board, State, Province and No.)

1C41-030 SHEET 3 OF 4

FORM N-2 CERTIFICATE HOLDER'S DATA REPORT FOR IDENTICAL NUCLEAR PARTS AND APPURTENANCES

As Required by the Provisions of the ASME Code, Section III

Not to Exceed One Day's Production

00

Pg. 1 of 2

1. Manufactured and certified by: ST Conax Nuclear, 402 Sonwil Drive, Cheektowaga, NY 14225 (Name and address of NPT Certificate Holder)

2. Manufactured for: GE Nuclear Energy, 175 Curtner Avenue, San Jose, CA 95125 (Name and address of Purchaser)

3. Location of Installation: Unknown (Name and address)

4. Type: N20000, Rev. G (Drawing No.) | SA479 304SSTA (Mat'l Spec. No.) | 75 KSI (Tensile strength) | N/A (Form) | 2000 (Year built)

5. ASME Code, Section III, Division 1: '77 (Edition) | S77 (Addenda date) | 1 (Class) | N/A (Code Case No.)

6. Fabricated in accordance with Const. Spec. (Div. 2 only): N/A (No.) Revision ____ Date ____

7. Remarks: Trigger Body Subassembly for explosive actuated valve replacement kit for standby liquid control system.

Para. NB-2121(b) is applicable to ram. Press Fit/Seal on .1328 & .4375 diameters. Overall subassembly length is 2.6".

Pressure Test at 2800 psi for 10 minutes.

8. Nom. thickness (in.): See Remarks Min. design thickness (in.): See Remarks Dia. ID (ft. & in.): See Remarks Length overall (ft. & in.): See Remarks

9. When applicable, Certificate Holder's Data Reports are attached for each item of this report:

	Part or Appurtenance Serial Number	National Board No. in Numerical Order		Part or Appurtenance Serial Number	National Board No. in Numerical Order
(1)	6870	6870	(26)		
(2)	6871	6871	(27)		
(3)	6872	6872	(28)		
(4)	6873	6873	(29)		
(5)	6874	6874	(30)		
(6)	6875	6875	(31)		
(7)			(32)		
(8)			(33)		
(9)			(34)		
(10)			(35)		
(11)			(36)		
(12)			(37)		
(13)			(38)		
(14)			(39)		
(15)			(40)		
(16)			(41)		
(17)			(42)		
(18)			(43)		
(19)			(44)		
(20)			(45)		
(21)			(46)		
(22)			(47)		
(23)			(48)		
(24)			(49)		
(25)			(50)		

10. Design pressure: 1500 psi Temp.: 150 °F Hydro test pressure: See Remarks psi at temp. °F

Supplementary information in form of lists, sketches, or drawings may be attached. (1) Size: 8½ x 11. (2) Number in upper right corner: (a) Item 1 of this report is designated "1-1". (b) Sheets are numbered sequentially starting with "1-2". (3) Each sheet is numbered and the total number of sheets is recorded at the top of this form.

5/2/2

FORM N-2 (Back) Pg 2 of 2

10088

Certificate Holder's Serial No. 25570 Drawing 5475

CERTIFICATION OF DESIGN

Design specifications certified by George H. Skoda P.E. State CA Reg. no. 15847

Design report certified by Francis J. Dominoni P.E. State NY Reg. no. 28812

CERTIFICATE OF COMPLIANCE

We certify that the statements made in this report are correct and that this (these) Trigger Body Subassembly

conforms to the rules of construction of the ASME Code, Section III, Division 1.

NPT Certificate of Authorization No. 2N-1850 Expires September 2, 2001

Date 5/10/00 Name IST Conax Nuclear Signed Paul Blanchman

(Type Certificate Holder's Name) (Authorized Representative)

CERTIFICATE OF INSPECTION

I, the undersigned, holding a valid commission issued by the National Board of Boiler and Pressure Vessel Inspectors and the State or Province of New York and employed by Hartford Steam Boiler Inspection & Insurance Company of Hartford, CT have inspected these items described in this Data Report on MAY 2, 2000 and state that to the best of my knowledge and belief, the Certificate Holder has fabricated these parts or appurtenances in accordance with the ASME Code, Section III, Division 1. Each part listed has been authorized for stamping on the date shown above.

By signing this certificate, neither the inspector nor his employer makes any warranty, expressed or implied, concerning the equipment described in this Data Report. Furthermore, neither the inspector nor his employer shall be liable in any manner for any personal injury or property damage or loss of any kind arising from or connected with this inspection.

Date 5/16/00 Signed [signature] Commissions NB 10964 AN NY 6057

(Authorized Inspector) (Nat'l Bd. and State or Province and Number)

GES

D100-1

1C41-030 SHEET 4 OF 4

FORM N-2 CERTIFICATE HOLDER'S DATA REPORT FOR IDENTICAL NUCLEAR PARTS AND APPURTENANCES

As Required by the Provisions of the ASME Code Section III

Not to Exceed One Day's Production

Pg. 1 of 2

1. Manufactured and certified by: IST Conax Nuclear Inc. 2402 Sonnet Drive, Cheektowaga, NY 14225 (name and address of NPT Certificate holder)

2. Manufactured for: GE Nuclear Energy, 175 Curtner Avenue, San Jose, CA 95125 (name and address of Purchaser)

3. Location of Installation: Unknown (plant name and address)

4. Type: N3B017, Rev. F (drawing no.) | SA479 304SST (material specification) | 76 KSI (tensile strength) | N/A (CRN) | 2000 (year built)

5. ASME Code, Section III, Division 1: 77 (edition) | S77 (addenda date) | 1 (class) | N/A (Code Case No.)

6. Fabricated in accordance with Const. Spec. (Div. 2 only): N/A (no.) Revision: Date:

7. Remarks: Inlet fitting for explosive actuated valve replacement kit for standby liquid control system.

Pressure Test at 2800 psi for 10 minutes

8. Nom. thickness (in.) .040 Min. design thickness (in.) .031 Outside diameter (ft & in.) .815 Length overall (ft & in.) 2.245

9. When applicable, Certificate Holder's Data Reports are attached for each item of this report.

	Part or Appurtenance Serial Number	National Board No. in Numerical Order		Part or Appurtenance Serial Number	National Board No. in Numerical Order
(1)	6B45	6B46	(26)		
(2)	6B46	6B46	(27)		
(3)	6B47	6B47	(28)		
(4)	6B48	6B48	(29)		
(5)	6B49	6B49	(30)		
(6)	6B50	6B50	(31)		
(7)			(32)		
(8)			(33)		
(9)			(34)		
(10)			(35)		
(11)			(36)		
(12)			(37)		
(13)			(38)		
(14)			(39)		
(15)			(40)		
(16)			(41)		
(17)			(42)		
(18)			(43)		
(19)			(44)		
(20)			(45)		
(21)			(46)		
(22)			(47)		
(23)			(48)		
(24)			(49)		
(25)			(50)		

10. Design pressure: 1500 psi at Temp. 150 °F | Hydro. test pressure: See Remarks at Temp. °F

Supplemental information in the form of lists, sketches, or drawings may be attached provided (1) size is 8½ x 11, (2) information in items 1 and 2 and on this Data Report is included on each sheet, (3) each sheet is numbered and the number of sheets is recorded at the top of this form.

FORM N-2 (Back) (Pg 2 of 2)

0048

Certificate Holder's Serial No. 6846 Form 6820

CERTIFICATION OF DESIGN

Design specifications certified by Georgios Skoda P.E. State CA Reg. no. 15847

Design reports certified by Francis J. Domino P.E. State NY Reg. no. 38832

CERTIFICATE OF COMPLIANCE

We certify that the statements made in this report are correct and that this (item) Inlet Fittings conforms to the rules of construction of the ASME Code, Section III, Division 1.

NPT Certificate of Authorization No. N-1350 Expires September 2, 2001

Date 5/26/00 Name KIST/Conax Nuclear Signed

(NPT Certificate Holder) (authorized representative)

CERTIFICATE OF INSPECTION

I, the undersigned, holding a valid commission issued by the National Board of Boiler and Pressure Vessel Inspectors and the State or Province of New York and employed by Hartford Steam Boiler Inspection & Insurance Company of Hartford, CT have inspected these items described in this Data Report on MAY 26 2000 and state that to the best of my knowledge and belief, the Certificate Holder has fabricated these parts or appurtenances in accordance with the ASME Code, Section III, Division 1. Each part listed has been authorized for stamping on the date shown above.

By signing this certificate, neither the inspector nor his employer makes any warranty, expressed or implied, concerning the equipment described in this Data Report. Furthermore, neither the inspector nor his employer shall be liable in any manner for any personal injury or property damage or loss of any kind arising from or connected with this inspection.

Date 5-26-00 Signed Commissions NB 10964 AN, NY 5057

(authorized inspector) (National Board, State, Province and Endorsements)

1C41-031

NIS-2/NR-1 OWNER'S REPORT FOR REPAIRS OR REPLACEMENTS

As required by the Provisions of the ASME Code Section XI

PNPP No. 9308 Rev. 9/11/00 NQI-1741

1. Owner: FIRSTENERGY CORP.
10 Center Road, Perry, Ohio 44081

Date 9-9-02
Sheet 1 of 4

2. Plant: Perry Nuclear Power Plant (PNPP)
10 Center Road, Perry, Ohio 44081

Unit 1
98-328 R/0
(Repair Org. P.O. No., etc.)

3. Work Performed By: FIRSTENERGY Nuclear Operating Company PNPP
10 Center Road, Perry, Ohio 44081

Type Code Symbol Stamp NR
Authorization No. 33
Expiration Date 9/26/2005

4. Identification of System: 1C41 Standby Liquid Control

5. (a) Applicable Construction Code: ASME Section III NB ,1971 Edition
NAME/SECTION/DIVISION/CLASS

Winter 19 72 Addenda Code Case(s) N/A

(b) Construction Code used for repairs, modifications, or replacements: 1971 (Edition) Winter 72 (Addenda) N/A (Code Case(s))

(c) ASME Code Section XI applicable for Inservice Inspection: 1989 (Edition) N/A (Addenda) N/A (Code Case(s))

(d) Applicable Edition of Section XI Utilized for Repairs, Modification, or Replacements:
19 89 , N/A 19 N/A Addenda N/A (Code Case(s))

(e) Design Responsibilities FIRSTENERGY Nuclear Oprerating Company PNPP

6. Identification of Components Repaired, Modified, or Replacement Components

Name of Component	Name of Manufacturer	Manufacturer Serial No.	Nat. Board No.	Other ID.	Year Built	Repair, Replacement, or Modification	ASME Code Stamped
Valve	Conax Corp.	N/A	113	N/A	1975	Replacement	Yes

7. Description of Work: Replaced primer/trigger assembly with Kit S/N 536EQ using trigger subassembly S/N 5541 and inlet fitting S/N 5516. The squib valve asset is 1C41-F004B.

8. Test Conducted: Hydrostatic- ☐ Pneumatic- ☐ Nominal Operating Pressure- ☐ Other- ☐
Pressure N/A psi Test Temperature N/A degrees F Code Case(s) N/A

NIS-2/NR-1 OWNER'S REPORT FOR REPAIRS OR REPLACEMENTS (Back)

PNPP No. 9308 Rev. 9/11/00 NQI-1741

9. Remarks:

NO NAMEPLATE/STAMPING PERFORMED DUE TO THE INTERFACE CONTROLS OF RA-2370 BEING IN EFFECT AND JURISDICTIONAL AUTHORITY CONCURRENCE HAVING BEEN RECEIVED.

Note: Attach all applicable Manufacturer's Data Reports. Supplemental sheets such as lists, sketches, or drawings may be used, provided (1) size is 8 1/2 in. x 11 in., (2) information in items 1 through 6 of this report is included on each sheet, and (3) each sheet is numbered and the number of sheets is recorded on the front of this form.

CERTIFICATE OF COMPLIANCE

I, Michael J Tepsick, certify that to the best of my knowledge and belief the statements made in this report are correct and the repair, modification or replacement of the items described above conforms to Section XI of the ASME Code and to the National Board Inspection Code "NR" rules.

National Board Certificate of Authorization No. 33 to use the "NR stamp expires 26 Sept., 20 05

Date 9 SEPT., 2002 Signed FENOC-PNPP (name of repair organization) [signature] (authorized representative) SR QUALITY TECH (title)

CERTIFICATE OF INSPECTION/INSERVICE INSPECTION

I, Thomas G Laps, holding a valid commission issued by The National Board of Boiler and Pressure Vessel Inspectors and certificate of competency issued by the jurisdiction of OHIO and employed by Factory Mutual Ins. Co. of Johnston, RI have inspected the repair, modification or replacement described in this report on SEPT 9, 2002 and state that to the best of my knowledge and belief, this repair, modification or replacement has been completed in accordance with Section XI of the ASME Code and the National Board Inspection Code "NR" rules.

By signing this certificate, neither the undersigned nor my employer makes any warranty, expressed or implied, concerning the work described in this report. Furthermore, neither the undersigned nor my employer shall be liable in any manner for any personal injury, property damage or loss of any kind arising from or connected with this inspection.

Date 9/9, 2002 Signed Thomas G Laps (inspector) Commissions NB 9330 "N" "I" "A" Ohio Comm. (National Board (include endorsements), and jurisdiction, and no.)

1C41-031 SHEET 2 OF 4

FORM NA-1 MANUFACTURER'S DATA REPORT FOR SELF-ACTUATED VALVES

As Required by the Provisions of the ASME Code Rules

1. Manufactured by Conax Corporation, Buffalo, New York 14225 Order No. 1-28000
(Name & Address of Manufacturer)

2. Manufactured for General Electric Co., San Jose, Calif. Order No. 205-AE-282
(Name and Address)

3. Owner Unknown

4. Location of Plant Perry I

5. Pump or Valve Identification Explosive Actuated Valve for Standby Liquid Control System

(7" O.D., 1-1/2" tube size)
(Brief description of service for which equipment was designed)

(a) Drawing No. N20000 Prepared by Conax Corporation

(b) National Board No. 113

6. Design Conditions 1400 (Pressure) psi 150 (Temperature) °F

7. The material, design, construction, and workmanship complies with ASME Code Section III, Class 1

Edition 1971, Addenda Date Winter 72 Case No. Not Applicable

	Mark No.	Material Spec. No.	Manufacturer	Remarks
(a) Castings				
(b) Forgings				

Supplemental Sheets in form of lists, sketches, or drawings may be used provided: (1) size is 8½" x 11", (2) information in items 1 through 4 on this data report is included on each sheet, and (3) each sheet is numbered and number of sheets is recorded at top of this form.

BEST AVAILABLE COPY

(c) Fitting			
(d) Other Parts			
Valve Parts	SA 479	Conax Corporation	
Trigger Body	SA 479	Conax Corp.	
Ram	SA 564	Conax Corp.	
Inlet Fittings	SA 479	Conax Corp.	

8. Hydrostatic test 2800 psi.

CERTIFICATION OF DESIGN

Design information on file at General Electric Nuclear Energy Div., San Jose, Calif.

Stress analysis report on file at Conax Corporation, 2300 Walden Avenue, Buffalo, N.Y. 14225

Design specifications certified by J. Kelso (1) Prof. Eng. State Calif. Reg. No. 13738

Stress analysis report certified by Francis J. Domino (1) Prof. Eng. State N.Y. Reg. No. 36832

(1) Signature not required. List name only.

We certify that the statements made in this report are correct.

Date [illegible] 19 [illegible] Signed Conax Corporation By [illegible]
(Manufacturer)

Certificate of Authorization No. N-829 expires June 17, 1977

Richard L. Duraure
Quality Assurance Manager

CERTIFICATE OF SHOP INSPECTION

I, the undersigned, holding a valid commission issued by the National Board of Boiler and Pressure Vessel Inspectors and/or the State of Province of National Board and employed by Lumbermans Mutual Casualty Co. of Chicago, Illinois have inspected the equipment described in this Data Report on 6/20/75 to , and state that to the best of my knowledge and belief, the Manufacturer has constructed this equipment in accordance with the applicable Subsections of ASME Code, Section III.

By signing this certificate, neither the Inspector nor his employer makes any warranty, expressed or implied, concerning the equipment described in this Data Report. Furthermore, neither the Inspector nor his employer shall be liable in any manner for any personal injury or property damage or a loss of any kind arising from or connected with this inspection.

Date 6/20/75 19

[illegible] Commissions PA UC 2018 [illegible]
(Inspector) (National Board, State, Province and No.)

1C41-031 SHEET 3 OF 4

7

FORM N-2 CERTIFICATE HOLDERS' DATA REPORT FOR IDENTICAL NUCLEAR PARTS AND APPURTENANCES*

As Required by the Provisions of the ASME Code, Section III
Not to Exceed One Day's Production

1. Manufactured and certified by IST Conax Nuclear, 2300 Walden Avenue, Cheektowaga, NY 14225 (name and address of NPT Certificate Holder)

2. Manufactured for GE Nuclear Energy, 175 Curtner Avenue, San Jose, CA 95125 (name and address of Purchaser)

3. Location of installation Unknown (name and address)

4. Type: N20000, Rev. G (drawing no.) SA479 304SST (mat'l spec. no.) 75 KSI (tensile strength) N/A (CRN) 1998 (year built)

5. ASME Code, Section III, Division 1: 77 (edition) S77 (addenda date) 1 (class) N/A (Code Case no.)

6. Fabricated in accordance with Const. Spec. (Div. 2 only) N/A (no.) Revision _____ Date _____

7. Remarks: Trigger Body Subassembly for explosive actuated valve replacement kit for standby liquid control system.

Para. NB-2121 (b) is applicable to ram. Press Fit/Seal on .328 & .4375 diameters. Overall subassembly length is 2.5".

Pressure Test at 2800 psi for 10 minutes.

8. Nom. thickness (in.) See Remarks Min. design thickness (in.) See Remarks Dia. ID (ft & in.) See Remarks Length overall (ft & in.) See Remarks

9. When applicable, Certificate Holders' Data Reports are attached for each item of this report:

	Part or Appurtenance Serial Number	National Board No. in Numerical Order		Part or Appurtenance Serial Number	National Board No. in Numerical Order
(1)	5540	5540	(26)		
(2)	5541	5541	(27)		
(3)	5542	5542	(28)		
(4)	5543	5543	(29)		
(5)	5544	5544	(30)		
(6)	5545	5545	(31)		
(7)	5546	5546	(32)		
(8)	5547	5547	(33)		
(9)	5548	5548	(34)		
(10)	5549	5549	(35)		
(11)	5550	5550	(36)		
(12)	5551	5551	(37)		
(13)			(38)		
(14)			(39)		
(15)			(40)		
(16)			(41)		
(17)			(42)		
(18)			(43)		
(19)			(44)		
(20)			(45)		
(21)			(46)		
(22)			(47)		
(23)			(48)		
(24)			(49)		
(25)			(50)		

NI DB

10. Design pressure 1500 psi. Temp. 150 °F. Hydro. test pressure * See Remarks (when applicable) at temp. °F

*Supplemental information in the form of lists, sketches, or drawings may be used provided (1) size is 8½ x 11, (2) information in items 2 and 3 on this Data Report is included on each sheet, (3) each sheet is numbered and the number of sheets is recorded at the top of this form.

9-6-98

25x10

FORM N-2 (Back - Pg. 2 of 2)

Certificate Holder's Serial Nos. 5540 through 5551

CERTIFICATION OF DESIGN

Design specifications certified by George I. Skoda (when applicable) P.E. State CA Reg. no. 15847

Design report* certified by Francis J. Domino (when applicable) P.E. State NY Reg. no. 36832

CERTIFICATE OF COMPLIANCE

We certify that the statements made in this report are correct and that this (these) Inlet Fittings conforms to the rules of construction of the ASME Code, Section III, Division 1.

NPT Certificate of Authorization No. N-1850 Expires September 2, 1998

Date 8/4/98 Name IST Conax Nuclear (NPT Certificate Holder) Signed Paul E. Couchman (Authorized representative)

CERTIFICATE OF INSPECTION

I, the undersigned, holding a valid commission issued by the National Board of Boiler and Pressure Vessel Inspectors and the State or Province of New York and employed by Hartford Steam Boiler Inspection & Insurance Company of Hartford, CT have inspected these items described in this Data Report on AUG. 4 1998, and state that to the best of my knowledge and belief, the Certificate Holder has fabricated these parts or appurtenances in accordance with the ASME Code, Section III, Division 1. Each part listed has been authorized for stamping on the date shown above.

By signing this certificate, neither the inspector nor his employer makes any warranty, expressed or implied, concerning the equipment described in this Data Report. Furthermore, neither the inspector nor his employer shall be liable in any manner for any personal injury or property damage or loss of any kind arising from or connected with this inspection.

Date 8-4-98 Signed [illegible] (Authorized Inspector) Commissions NB 10984AN NY 5057 (Nat'l Bd. incl. endorsements and state or prov. and no.)

RI DB

25

1C41-031 SHEET 4 OF 4

6

FORM N-2 CERTIFICATE HOLDERS' DATA REPORT FOR IDENTICAL NUCLEAR PARTS AND APPURTENANCES*

As Required by the Provisions of the ASME Code, Section III
Not to Exceed One Day's Production

Pg. 1 of 2

1. Manufactured and certified by IST Conax Nuclear, Inc. 402 Sonwil Drive, Cheektowaga, NY 14225 (name and address of NPT Certificate Holder)

2. Manufactured for GE Nuclear Energy, 175 Curtner Avenue, San Jose, CA 95125 (name and address of Purchaser)

3. Location of installation Unknown (name and address)

4. Type: N38017, Rev. F (drawing no.) SA479 304SST (mat'l spec. no.) 75 KSI (tensile strength) N/A (CRN) 1998 (year built)

5. ASME Code, Section III, Division 1: 77 (edition) S77 (addenda date) 1 (class) N/A (Code Case no.)

6. Fabricated in accordance with Const. Spec. (Div. 2 only) N/A (no.) Revision _____ Date _____

7. Remarks: Inlet Fitting for explosive actuated valve replacement kit for standby liquid control system.

Pressure Test at 2800 psi for 10 minutes.

8. Nom. thickness (in.) .040 Min. design thickness (in.) .031 Dia. ID (ft & in.) .815" Length overall (ft & in.) 2.245"

9. When applicable, Certificate Holders' Data Reports are attached for each item of this report:

	Part or Appurtenance Serial Number	National Board No. in Numerical Order		Part or Appurtenance Serial Number	National Board No. in Numerical Order
(1)	5515	5515	(26)		
(2)	5516	5516	(27)		
(3)	5517	5517	(28)		
(4)	5518	5518	(29)		
(5)	5519	5519	(30)		
(6)	5520	5520	(31)		
(7)	5521	5521	(32)		
(8)	5522	5522	(33)		
(9)	5523	5523	(34)		
(10)	5524	5524	(35)		
(11)	5525	5525	(36)		
(12)	5526	5526	(37)		
(13)			(38)		
(14)			(39)		
(15)			(40)		
(16)			(41)		
(17)			(42)		
(18)			(43)		
(19)			(44)		
(20)			(45)		
(21)			(46)		
(22)			(47)		
(23)			(48)		
(24)			(49)		
(25)			(50)		

RI DR

10. Design pressure 1500 psi. Temp. 150 °F. Hydro. test pressure * See Remarks (when applicable) at temp. °F

*Supplemental information in the form of lists, sketches, or drawings may be used provided (1) size is 8½ x 11, (2) information in items 2 and 3 on this Data Report is included on each sheet, (3) each sheet is numbered and the number of sheets is recorded at the top of this form.

8-6-98

25x10

FORM N-2 (Back - Pg. 2 of 2)

Certificate Holder's Serial Nos. 5518 through 5528

CERTIFICATION OF DESIGN

Design specifications certified by George I. Skoda (when applicable) P.E. State CA Reg. no. 15847

Design report* certified by Francis J. Domino (when applicable) P.E. State NY Reg. no. 38832

CERTIFICATE OF COMPLIANCE

We certify that the statements made in this report are correct and that this (these) Inlet Fittings conforms to the rules of construction of the ASME Code, Section III, Division 1.

NPT Certificate of Authorization No. N-1850 Expires September 2, 1998

Date 8/4/98 Name IST Conax Nuclear (NPT Certificate Holder) Signed Paul Elovich (Authorized representative)

CERTIFICATE OF INSPECTION

I, the undersigned, holding a valid commission issued by the National Board of Boiler and Pressure Vessel Inspectors and the State or Province of New York and employed by Hartford Steam Boiler Inspection & Insurance Company of Hartford, CT have inspected these items described in this Data Report on AUG. 4 1998, and state that to the best of my knowledge and belief, the Certificate Holder has fabricated these parts or appurtenances in accordance with the ASME Code, Section III, Division 1. Each part listed has been authorized for stamping on the date shown above. By signing this certificate, neither the inspector nor his employer makes any warranty, expressed or implied, concerning the equipment described in this Data Report. Furthermore, neither the inspector nor his employer shall be liable in any manner for any personal injury or property damage or loss of any kind arising from or connected with this inspection.

Date 8-4-98 Signed [signature] (Authorized Inspector) Commissions NB 10964AN NY 5057 (Nat'l Bd. incl. endorsements and state or prov. and no.)

RI
DB

1C41-032
Sheet 1 of 2

NIS-2/NR-1 OWNER'S REPORT FOR REPAIRS OR REPLACEMENTS

As required by the Provisions of the ASME Code Section XI

PNPP No. 9308 Rev. 9/11/00 NQI-1741

1. Owner: FIRSTENERGY CORP. Date 01-06-03
10 Center Road, Perry, Ohio 44081 Sheet 1 of 2

2. Plant: Perry Nuclear Power Plant (PNPP) Unit 1
10 Center Road, Perry, Ohio 44081 02-012687, R-0
(Repair Org. P.O. No., etc.)

3. Work Performed By: FIRSTENERGY Nuclear Operating Company PNPP Type Code Symbol Stamp NR
10 Center Road, Perry, Ohio 44081 Authorization No. 33
Expiration Date 9-26-05

4. Identification of System: 1C41 Standby Liquid Control

5. (a) Applicable Construction Code: ASME Sec III, Subsection NC-Cl. 2 ,1974 Edition
NAME/SECTION/DIVISION/CLASS

Winter 19 75 Addenda Code Case(s) N-242, N-272, N-240, N-413, 1644-5, AND 1644-8

(b) Construction Code used for repairs, modifications, or replacements: 1974 (Edition) W75 (Addenda) N/A (Code Case(s))

(c) ASME Code Section XI applicable for Inservice Inspection: 1989 (Edition) N/A (Addenda) N/A (Code Case(s))

(d) Applicable Edition of Section XI Utilized for Repairs, Modification, or Replacements:
19 89 , N/A 19 N/A Addenda N/A (Code Case(s))

(e) Design Responsibilities FIRSTENERGY Nuclear Operating Company

6. Identification of Components Repaired, Modified, or Replacement Components

Name of Component	Name of Manufacturer	Manufacturer Serial No.	Nat. Board No.	Other ID.	Year Built	Repair, Replacement, or Modification	ASME Code Stamped
Piping System	Pullman Power Products	1C41	108	N/A	1985	Replacement	Yes

7. Description of Work: Replaced Relief Valve 1C41-F0029B (S/N 4) with replacement Relief Valve (S/N 6).

8. Test Conducted: Hydrostatic- ☐ Pneumatic- ☐ Nominal Operating Pressure- ☒ Other- ☐
Pressure 1225 psi Test Temperature 77 degrees F Code Case(s) N/A

NIS-2/NR-1 OWNER'S REPORT FOR REPAIRS OR REPLACEMENTS (Back)

PNPP No. 9308 Rev. 9/11/00 NQI-1741

9. Remarks:

NO NAMEPLATE/STAMPING PERFORMED DUE TO THE INTERFACE CONTROLS OF RA-2370 BEING IN EFFECT AND JURISDICTIONAL AUTHORITY CONCURRENCE HAVING BEEN RECEIVED.

Note: Attach all applicable Manufacturer's Data Reports. Supplemental sheets such as lists, sketches, or drawings may be used, provided (1) size is 8 1/2 in. x 11 in., (2) information in items 1 through 6 of this report is included on each sheet, and (3) each sheet is numbered and the number of sheets is recorded on the front of this form.

CERTIFICATE OF COMPLIANCE

I, Lester J. Erbacher, certify that to the best of my knowledge and belief the statements made in this report are correct and the repair, modification or replacement of the items described above conforms to Section XI of the ASME Code and to the National Board Inspection Code "NR" rules.

National Board Certificate of Authorization No. 33 to use the "NR stamp expires 9-26, 20 05

Date Jan. 06, 20 03 Signed FENOC-PNPP (name of repair organization) (authorized representative) QE (title)

CERTIFICATE OF INSPECTION/INSERVICE INSPECTION

I, Thomas G. Laps, holding a valid commission issued by The National Board of Boiler and Pressure Vessel Inspectors and certificate of competency issued by the jurisdiction of OHIO and employed by Factory Mutual Ins. Co. of Johnston, RI have inspected the repair, modification or replacement described in this report on JAN. 6, 20 03 and state that to the best of my knowledge and belief, this repair, modification or replacement has been completed in accordance with Section XI of the ASME Code and the National Board Inspection Code "NR" rules.

By signing this certificate, neither the undersigned nor my employer makes any warranty, expressed or implied, concerning the work described in this report. Furthermore, neither the undersigned nor my employer shall be liable in any manner for any personal injury, property damage or loss of any kind arising from or connected with this inspection.

Date JAN. 06, 20 03 Signed Thomas G. Laps (inspector) Commissions NB 9330 "N" "I" "A" Ohio Comm. (National Board (include endorsements), and jurisdiction, and no.)

1C41-032
Sheet 2 of 2

FORM NV-1 MANUFACTURERS' DATA REPORT FOR SAFETY AND SAFETY RELIEF VALVES*
(As Required by the Provisions of the ASME Code, Section III, Div. I)

1. Manufactured by TARGET ROCK CORP., 1966E. Broadhollow Rd., E.Farmingdale, NY (Name and Address of Manufacturer)
2. Manufactured for Cleveland Electric Illuminating Co., Cleveland, Ohio (Name and Address of Purchaser or Owner)
3. Location of Installation Perry Nuclear Power Plant, Perry, Ohio (Name and Address)
4. — (CRN) 1 1/2 x 2 REH-S-3 (Drawing No.) ——— (Nat'l Bd. No.) 1982 (Year Built)
5. Valve 76H-012 (Model No., Series No.) Identifying Nos. 6 (Manufacturers' Serial No.)
   Type Relief Valve (Safety, Safety Relief; Pilot; Power Actuated)
   Orifice Size .500 inch Nominal Inlet Size 1 1/2 inch Outlet Size 2" inch

* 6. Set Pressure (PSIG) ~~1275~~ *1400 Rated Temperature 120 °F
   Stamped Capacity ——— lbs/hr @ ——— % Overpressure Blowdown (PSIG) ——— (Sat. Steam)
   Hydrostatic Test (PSIG) Inlet 3250 Outlet 3250 (Applicable to valves for closed systems only)

7. Pressure Retaining Pieces

	Serial No. or Identification	Material Specification Incl. Type or Grade
Body	300424	ASME-SA479-316L
Bonnet or Yoke	300387	ASME-SA479-316
Support Rods	———	———
Nozzle	202075	ASME-SA479-316L
Disc	202989	ASME-SA564, GR.630
Spring Washers		
Adjusting Screw		
Spindle		
Spring		
Bolting	Nut Hex 3/8-16 UNC2B	ASME-SA194-2H
Other Pieces		
Flange	202074	ASME-SA479-316L
Screw Sock. Hd.	3/8-16 x 1 1/2	ASME-SA193-B7
Screw Sock. Hd.	102609	ASME-SA193-B7

G. Abruzzo, QA Manager 5/7/85 Date

W. A. Roland, ANI 5/7/85 Date

* Supplemental sheets in form of lists, sketches or drawings may be used provided (1) size is 8-1/2" × 11", (2) information in items 1-2 on this data report is included on each sheet, and (3) each sheet is numbered and number of sheets is recorded at top of this form.

(1/76) This form (E00042) may be obtained from the Order Dept., ASME, 345 E. 47 St., New York, N.Y. 10017

DOCUMENT REVIEWED BY 5646 FNPP

FORM NV-1 (Back)

CERTIFICATE OF COMPLIANCE

We certify that the statements made in this report are correct and that this valve conforms to the rules of construction of the ASME Code for Nuclear Power Plant Components, Section III, Div. 1., 1974 Edition, Addenda Sum. 1975 (Date)

Code Case No. ---.

Date 10-13-82 Signed Target Rock Corp. (Manufacturer) by [illegible]

Our ASME Certificate of Authorization No. 1949 Art G. Abruzzo, Mgr. Quality to use the NV (NV) symbol expires 12/9/83 (Date)

CERTIFICATION OF DESIGN

Design information on file at Target Rock Corporation

Stress analysis report (Class 1 only) on file at ---

Design specifications certified by[1] Jan Paul Sockel

PE State Pa. Reg. No. 20130E

Stress report certified by[1] ---

PE State --- Reg. No. ---

[1] Signature not required—list name only.

CERTIFICATE OF SHOP INSPECTION

I, the undersigned, holding a valid commission issued by the National Board of Boiler and Pressure Vessel Inspectors and the State or Province of New York and employed by Commercial Union Ins. of Boston, Mass. have inspected the pump, or valve, described in this Data Report on 10/13 19 82 and state that to the best of my knowledge and belief, the Manufacturer has constructed this pump, or valve, in accordance with the ASME Code for Nuclear Power Plant Components.

By signing this certificate, neither the inspector nor his employer makes any warrant, expressed or implied, concerning the equipment described in this Data Report. Furthermore, neither the inspector nor his employer shall be liable in any manner for any personal injury or property damage or a loss of any kind arising from or connected with this inspection.

Date 10/13 19 82

Signed William O. Roland (Inspector) Commissions NEW YORK STATE COMMISSION NO. 2283 ALSO COMMISSIONED IN Penn., Ohio & Conn. (Nat'l. Bd., State Prov. and No.)

1C41-033

NIS-2/NR-1 OWNER'S REPORT FOR REPAIRS OR REPLACEMENTS

As required by the Provisions of the ASME Code Section XI

PNPP No. 9308 Rev. 9/11/00 NQI-1741

1. Owner: FIRSTENERGY CORP.
10 Center Road, Perry, Ohio 44081
Date 6/26/03
Sheet 1 of 4

2. Plant: Perry Nuclear Power Plant (PNPP)
10 Center Road, Perry, Ohio 44081
Unit ONE
W.O. 01-12616-000 R/0
(Repair Org. P.O. No., etc.)

3. Work Performed By: FIRSTENERGY Nuclear Operating Company PNPP
10 Center Road, Perry, Ohio 44081
Type Code Symbol Stamp NR
Authorization No. 33
Expiration Date 9/26/2005

4. Identification of System: 1C41 STANDBY LIQUID CONTROL

5. (a) Applicable Construction Code: ASME Section III NB ,1974 Edition
NAME/SECTION/DIVISION/CLASS

Winter 19 75 Addenda Code Case(s) N/A

(b) Construction Code used for repairs, modifications, or replacements: 1974 (Edition) Winter 75 (Addenda) N/A (Code Case(s))

(c) ASME Code Section XI applicable for Inservice Inspection: 1989 (Edition) N/A (Addenda) N/A (Code Case(s))

(d) Applicable Edition of Section XI Utilized for Repairs, Modification, or Replacements:
19 89 , N/A 19 N/A Addenda N/A (Code Case(s))

(e) Design Responsibilities FIRSTENERGY Nuclear Operating Company PNPP

6. Identification of Components Repaired, Modified, or Replacement Components

Name of Component	Name of Manufacturer	Manufacturer Serial No.	Nat. Board No.	Other ID.	Year Built	Repair, Replacement, or Modification	ASME Code Stamped
VALVE	CONAX CORP	N/A	113	N/A	1975	REPLACEMENT	YES

7. Description of Work: REPLACED PRIMER TRIGGER ASM. WITH KIT GE 647-EQ. TRIGGER SUBASSEMBLY SN#6311 AND INLET FITTING SN#6336 IN VALVE 1C41F004B.

8. Test Conducted: Hydrostatic- ☐ Pneumatic- ☐ Nominal Operating Pressure- ☐ Other- ☐
Pressure N/A psi Test Temperature N/A degrees F Code Case(s) N/A

NIS-2/NR-1 OWNER'S REPORT FOR REPAIRS OR REPLACEMENTS (Back)

PNPP No. 9308 Rev. 9/11/00 NQI-1741

9. Remarks: NONE.

NO NAMEPLATE/STAMPING PERFORMED DUE TO THE INTERFACE CONTROLS OF RA-2370 BEING IN EFFECT AND JURISDICTIONAL AUTHORITY CONCURRENCE HAVING BEEN RECEIVED.

Note: Attach all applicable Manufacturer's Data Reports. Supplemental sheets such as lists, sketches, or drawings may be used, provided (1) size is 8 1/2 in. x 11 in., (2) information in items 1 through 6 of this report is included on each sheet, and (3) each sheet is numbered and the number of sheets is recorded on the front of this form.

CERTIFICATE OF COMPLIANCE

I, DAVID K. ASKEW, certify that to the best of my knowledge and belief the statements made in this report are correct and the repair, modification or replacement of the items described above conforms to Section XI of the ASME Code and to the National Board Inspection Code "NR" rules.

National Board Certificate of Authorization No. 33 to use the "NR stamp expires 26 Sept., 20 05

Date 6/26, 20 03 Signed FENOC-PNPP (name of repair organization) David K. Askew (authorized representative) Q.E. (title)

CERTIFICATE OF INSPECTION/INSERVICE INSPECTION

I, THOMAS G. LAPS, holding a valid commission issued by The National Board of Boiler and Pressure Vessel Inspectors and certificate of competency issued by the jurisdiction of OHIO and employed by HS.B. CT of HARTFORD, CONN. have inspected the repair, modification or replacement described in this report on JULY 7, 20 03 and state that to the best of my knowledge and belief, this repair, modification or replacement has been completed in accordance with Section XI of the ASME Code and the National Board Inspection Code "NR" rules.

By signing this certificate, neither the undersigned nor my employer makes any warranty, expressed or implied, concerning the work described in this report. Furthermore, neither the undersigned nor my employer shall be liable in any manner for any personal injury, property damage or loss of any kind arising from or connected with this inspection.

Date JULY 7, 20 03 Signed Thomas G. Laps (inspector) Commissions NB 9330 "N" "I" "A" Ohio Comm. (National Board (include endorsements), and jurisdiction, and no.)

1C41-0033
Page 2 of 4

FORM N-2 CERTIFICATE HOLDERS' DATA REPORT FOR IDENTICAL NUCLEAR PARTS AND APPURTENANCES*

As Required by the Provisions of the ASME Code, Section III
Not to Exceed One Day's Production

1. Manufactured and certified by IST Conax Nuclear, 402 Sonwil Drive, Cheektowaga, NY 14225 (name and address of NPT Certificate Holder)

2. Manufactured for GE Nuclear Energy, 175 Curtner Avenue, San Jose, CA 95125 (name and address of Purchaser)

3. Location of Installation Unknown (name and address)

4. Type: N20000, Rev. G (drawing no.) SA479 304SST (mat'l spec. no.) 75 KSI (tensile strength) N/A (CRN) 2002 (year built)

5. ASME Code, Section III, Division 1: 77 (edition) S77 (addenda date) 1 (class) N/A (Code Case no.)

6. Fabricated in accordance with Const. Spec. (Div. 2 only) N/A (no.) Revision _____ Date _____

7. Remarks: Trigger Body Subassembly for explosive actuated valve replacement kit for standby liquid control system.

Para. NB-2121 (b) is applicable to ram. Press Fit/Seal on .328 & .4375 diameters. Overall subassembly length is 2.5".

Pressure Test at 2800 psi for 10 minutes.

8. Nom. thickness (in.) See Remarks Min. design thickness (in.) See Remarks Dia. ID (ft & in.) See Remarks Length overall (ft & in.) See Remarks

9. When applicable, Certificate Holders' Data Reports are attached for each item of this report:

	Part or Appurtenance Serial Number	National Board No. in Numerical Order		Part or Appurtenance Serial Number	National Board No. in Numerical Order
(1)	6306	6306	(26)		
(2)	6307	6307	(27)		
(3)	6308	6308	(28)		
(4)	6309	6309	(29)		
(5)	6310	6310	(30)		
(6)	6311	6311	(31)		
(7)			(32)		
(8)			(33)		
(9)			(34)		
(10)			(35)		
(11)			(36)		
(12)			(37)		
(13)			(38)		
(14)			(39)		
(15)			(40)		
(16)			(41)		
(17)			(42)		
(18)			(43)		
(19)			(44)		
(20)			(45)		
(21)			(46)		
(22)			(47)		
(23)			(48)		
(24)			(49)		
(25)			(50)		

10. Design pressure 1500 psi. Temp. 150 °F. Hydro. test pressure * See Remarks (when applicable) at temp.

*Supplemental information in the form of lists, sketches, or drawings may be used provided (1) size is 8½ x 11, (2) information in items 2 and 3 on this Data Report is included on each sheet, (3) each sheet is numbered and the number of sheets is recorded at the top of this form.

GES 12/23/00

006B

FORM N-2 (Back - Pg. 2 of 2)

Certificate Holder's Serial Nos. 6306 through 6311

CERTIFICATION OF DESIGN

Design specifications certified by George I. Skoda (when applicable) P.E. State CA Reg. no. 15847

Design report* certified by Francis J. Domino (when applicable) P.E. State NY Reg. no. 36832

CERTIFICATE OF COMPLIANCE

We certify that the statements made in this report are correct and that this (these) Trigger Body Subassembly conforms to the rules of construction of the ASME Code, Section III, Division 1.

NPT Certificate of Authorization No. N-1850 Expires September 2, 2004

Date 4/23/02 Name IST Conax Nuclear (NPT Certificate Holder) Signed Paul Elovchman (authorized representative)

CERTIFICATE OF INSPECTION

I, the undersigned, holding a valid commission issued by the National Board of Boiler and Pressure Vessel Inspectors and the State or Province of New York and employed by HSB CT of Hartford, CT have inspected these items described in this Data Report on APR. 23 2002, and state that to th best of my knowledge and belief, the Certificate Holder has fabricated these parts or appurtenances in accordance with the ASME Code, Section III, Division 1. Each part listed has been authorized for stamping on the date shown above.
By signing this certificate, neither the inspector nor his employer makes any warranty, expressed or implied, concerning the equipment described in this Data Report. Furthermore, neither the inspector nor his employer shall be liable in any manner for any personal injury or property damage or loss of any kind arising from or connected with this inspection.

Date 5-1-02 Signed (Authorized Inspector) Commissions NB 10964AN NY 5057 (Nat'l Bd. (incl. endorsements) and state or prov. and no.)

5 GES

12/23/2002

1C41-0033
Page 3 of 4 0081

FORM N-2 CERTIFICATE HOLDERS' DATA REPORT FOR IDENTICAL NUCLEAR PARTS AND APPURTENANCES*

As Required by the Provisions of the ASME Code, Section III

Not to Exceed One Day's Production

1. Manufactured and certified by IST-Conax Nuclear, Inc. 402 Sonwil Drive, Cheektowaga, NY 14225
(name and address of NPT Certificate Holder)

2. Manufactured for GE Nuclear Energy, 175 Curtner Avenue, San Jose, CA 95125
(name and address of Purchaser)

3. Location of Installation Unknown
(name and address)

4. Type: N38017, Rev. F (drawing no.) | SA479 304SST (mat'l spec. no.) | 75 KSI (tensile strength) | N/A (CRN) | 2002 (year built)

5. ASME Code, Section III, Division 1: 77 (edition) | S77 (addenda date) | 1 (class) | N/A (Code Case no.)

6. Fabricated in accordance with Const. Spec. (Div. 2 only) N/A (no.) Revision _____ Date _____

7. Remarks: Inlet Fitting for explosive actuated valve replacement kit for standby liquid control system.

Pressure Test at 2800 psi for 10 minutes.

8. Nom. thickness (in.) .040 Min. design thickness (in.) .031 Dia. ID (ft & in.) .815" Length overall (ft & in.) 2.245"

9. When applicable, Certificate Holders' Data Reports are attached for each item of this report:

	Part or Appurtenance Serial Number	National Board No. in Numerical Order		Part or Appurtenance Serial Number	National Board No. in Numerical Order
(1)	6331	6331	(26)		
(2)	6332	6332	(27)		
(3)	6333	6333	(28)		
(4)	6334	6334	(29)		
(5)	6335	6335	(30)		
(6)	6336	6336	(31)		
(7)			(32)		
(8)			(33)		
(9)			(34)		
(10)			(35)		
(11)			(36)		
(12)			(37)		
(13)			(38)		
(14)			(39)		
(15)			(40)		
(16)			(41)		
(17)			(42)		
(18)			(43)		
(19)			(44)		
(20)			(45)		
(21)			(46)		
(22)			(47)		
(23)			(48)		
(24)			(49)		
(25)			(50)		

10. Design pressure 1500 psi. Temp. 150 °F. Hydro. test pressure * See Remarks (when applicable) at temp. °

*Supplemental information in the form of lists, sketches, or drawings may be used provided (1) size is 8½ x 11, (2) information in items 2 and 3 on this Data Report is included on each sheet, (3) each sheet is numbered and the number of sheets is recorded at the top of this form.

5 GES 12/23

008B

Certificate Holder's Serial Nos. 6331 through 6336

CERTIFICATION OF DESIGN

Design specifications certified by George I. Skoda (when applicable) P.E. State CA Reg. no. 15847

Design report* certified by Francis J. Domino (when applicable) P.E. State NY Reg. no. 36832

CERTIFICATE OF COMPLIANCE

We certify that the statements made in this report are correct and that this (these) Inlet Fittings conforms to the rules of construction of the ASME Code, Section III, Division 1.

NPT Certificate of Authorization No. N-1850 Expires September 2, 2004

Date 4/23/02 Name IST Conax Nuclear (NPT Certificate Holder) Signed Paul Elouchman (authorized representative)

CERTIFICATE OF INSPECTION

I, the undersigned, holding a valid commission issued by the National Board of Boiler and Pressure Vessel Inspectors and the State or Province of New York and employed by HSB CT of Hartford, CT have inspected these items described in this Data Report on APR. 23, 2002, and state that to the best of my knowledge and belief, the Certificate Holder has fabricated these parts or appurtenances in accordance with the ASME Code, Section III, Division 1. Each part listed has been authorized for stamping on the date shown above.
By signing this certificate, neither the inspector nor his employer makes any warranty, expressed or implied, concerning the equipment described in this Data Report. Furthermore, neither the inspector nor his employer shall be liable in any manner for any personal injury or property damage or loss of any kind arising from or connected with this inspection.

Date 5-1-02 Signed [illegible] (Authorized Inspector) Commissions NB 10964AN NY 5057 (Nat'l Bd. (incl. endorsements) and state or prov. and no.)

5 GES

12/23/02

1C41-0033
page 4 of 4

IPS-67
REV. C

02

ist conax nuclear

Data Sheet C
Electrical and Visual Inspection

Customer: General Electric Nuclear Energy
Customer P.O.: 52801023025
Conax S.O.: 7RX200
Item No.: 006
MPL N0.: C41-F004

Replacement Kit P/N N27006-03 G.E. S/N	Inlet Fitting P/N N38017-01B N.B. S/N	Trigger Body Subassembly P/N N20000-50 N.B. S/N	Primer Chamber P/N N27005-01 SEP S/N	Para. 5.1 Bridgewire Resistance 0.6 - 1.2 ohms		Para. 5.2 Dielectric Strength 500 ±25 VAC 1 minute	Para. 5.3 Circuit Isolation 500 VDC, 10 megohms minimum	Para. 5.4 Visual Inspection
				Pins 1-4	Pins 2-3			
G.E.642-EQ	6331	6306	1490	Accept		Accept	Accept	Accept
G.E.643-EQ	6332	6307	1491	Accept		Accept	Accept	Accept
G.E.644-EQ	6333	6308	1492	Accept		Accept	Accept	Accept
G.E.645-EQ	6334	6309	1493	Accept		Accept	Accept	Accept
G.E.646-EQ	6335	6310	1494	Accept		Accept	Accept	Accept
G.E.647-EQ	6336	6311	1495	Accept		Accept	Accept	Accept

IST Conax Nuclear Technician: James J Feeney Date: 8/20/02

IST Conax Nuclear Quality: [signature] Date: 8/20/02

5 GES 10/22/02

1E12-270

NIS-2/NR-1 OWNER'S REPORT FOR REPAIRS OR REPLACEMENTS

As required by the Provisions of the ASME Code Section XI

PNPP No. 9308 Rev. 9/11/00 NQI-1741

1. Owner: FIRSTENERGY CORP. Date 10/22/01
10 Center Road, Perry, Ohio 44081 Sheet 1 of 1

2. Plant: Perry Nuclear Power Plant (PNPP) Unit 1
10 Center Road, Perry, Ohio 44081 W.O. 99-2960
(Repair Org. P.O. No., etc.)

3. Work Performed By: FIRSTENERGY Nuclear Operating Company PNPP Type Code Symbol Stamp NR
10 Center Road, Perry, Ohio 44081 Authorization No. 33
Expiration Date 9/26/2002

4. Identification of System: 1E12 Residual Heat Removal

5. (a) Applicable Construction Code: ASME Section III NC ,1974 Edition
NAME/SECTION/DIVISION/CLASS

- Winter 19 75 Addenda Code Case(s) N272, N242, N413, N275, N282

(b) Construction Code used for repairs, modifications, or replacements: 1974 Edition, Winter 75 Addenda, Code Case(s)

(c) ASME Code Section XI applicable for Inservice Inspection: 1989 Edition, N/A Addenda, Code Case(s)

(d) Applicable Edition of Section XI Utilized for Repairs, Modification, or Replacements:
19 89 , N/A 19 N/A Addenda Code Case(s)

(e) Design Responsibilities FIRSTENERGY Nuclear Oprerating Company PNPP

6. Identification of Components Repaired, Modified, or Replacement Components

Name of Component	Name of Manufacturer	Manufacturer Serial No.	Nat. Board No.	Other ID.	Year Built	Repair, Replacement, or Modification	ASME Code Stamped
PIPING SYSTEM	Pullman Power	1E12	83	N/A	1985	Modification	Yes

7. Description of Work: Modified piping downstream of 1E12F0042C per SMRF 96-5075 as described in the remarks section.

8. Test Conducted: Hydrostatic- ☐ Pneumatic- ☐ Nominal Operating Pressure- ☒ Other- ☐
Pressure 150 psi Test Temperature 80 degrees F Code Case(s) n/a

NIS-2/NR-1 OWNER'S REPORT FOR REPAIRS OR REPLACEMENTS (Back)

PNPP No. 9308 Rev. 9/11/00 NQI-1741

9. Remarks: Installed 3/4" passive vent line using schedule 160 piping with Ht # 231634. Two half coupling with HT# 032H were also installed, with all welding being performed using welding consumables ER 70S -2 1/8" HT# 065627 and 3/32" HT# F5512.

NO NAMEPLATE/STAMPING PERFORMED DUE TO THE INTERFACE CONTROLS OF RA-2370 BEING IN EFFECT AND JURISDICTIONAL AUTHORITY CONCURRENCE HAVING BEEN RECEIVED.

Note: Attach all applicable Manufacturer's Data Reports. Supplemental sheets such as lists, sketches, or drawings may be used, provided (1) size is 8 1/2 in. x 11 in., (2) information in items 1 through 6 of this report is included on each sheet, and (3) each sheet is numbered and the number of sheets is recorded on the front of this form.

CERTIFICATE OF COMPLIANCE

I, David E. Lindquist, certify that to the best of my knowledge and belief the statements made in this report are correct and the repair, modification or replacement of the items described above conforms to Section XI of the ASME Code and to the National Board Inspection Code "NR" rules.

National Board Certificate of Authorization No. 33 to use the "NR stamp expires 26 Sept., 20 02

Date OCT 22, 20 01 Signed FENOC-PNPP (name of repair organization) David E. Lindquist (authorized representative) QE (title)

CERTIFICATE OF INSPECTION/INSERVICE INSPECTION

I, THOMAS G. LAPS, holding a valid commission issued by The National Board of Boiler and Pressure Vessel Inspectors and certificate of competency issued by the jurisdiction of OHIO and employed by Factory Mutual Ins. Co. of Johnston, RI have inspected the repair, modification or replacement described in this report on OCT. 24, 20 01 and state that to the best of my knowledge and belief, this repair, modification or replacement has been completed in accordance with Section XI of the ASME Code and the National Board Inspection Code "NR" rules.

By signing this certificate, neither the undersigned nor my employer makes any warranty, expressed or implied, concerning the work described in this report. Furthermore, neither the undersigned nor my employer shall be liable in any manner for any personal injury, property damage or loss of any kind arising from or connected with this inspection.

Date OCT. 24, 20 01 Signed Thomas G. Laps (inspector) Commissions NB 9330 "N" "I" "A" Ohio Comm. (National Board (include endorsements), and jurisdiction, and no.)

1E12-271

NIS-2/NR-1 OWNER'S REPORT FOR REPAIRS OR REPLACEMENTS

As required by the Provisions of the ASME Code Section XI

PNPP No. 9308 Rev. 9/11/00 NQI-1741

1. Owner: FIRSTENERGY CORP. Date 05/20/03
10 Center Road, Perry, Ohio 44081 Sheet 1 of 1

2. Plant: Perry Nuclear Power Plant (PNPP) Unit 1
10 Center Road, Perry, Ohio 44081 01-015388-000, R-0
(Repair Org. P.O. No., etc.)

3. Work Performed By: FIRSTENERGY Nuclear Operating Company PNPP Type Code Symbol Stamp NR
10 Center Road, Perry, Ohio 44081 Authorization No. 33
Expiration Date 9-26-05

4. Identification of System: 1E12 Residual Heat Removal System

5. (a) Applicable Construction Code: ASME Sec III, Subsection NF-1 ,1974 Edition
NAME/SECTION/DIVISION/CLASS

Winter 19 75 Addenda Code Case(s) N242, N272, N413

(b) Construction Code used for repairs, modifications, or replacements: 1974 (Edition) W75 (Addenda) N/A (Code Case(s))

(c) ASME Code Section XI applicable for Inservice Inspection: 1989 (Edition) N/A (Addenda) N/A (Code Case(s))

(d) Applicable Edition of Section XI Utilized for Repairs, Modification, or Replacements:
19 89 , N/A 19 N/A Addenda N/A (Code Case(s))

(e) Design Responsibilities FIRSTENERGY Nuclear Operating Company

6. Identification of Components Repaired, Modified, or Replacement Components

Name of Component	Name of Manufacturer	Manufacturer Serial No.	Nat. Board No.	Other ID.	Year Built	Repair, Replacement, or Modification	ASME Code Stamped
Piping System	Pullman Power Products	1E12	N/A	5280-1597	1985	Replacement	Yes

7. Description of Work: Replaced Load Stud and Jam Nut with New Load Stud (Ht Code CMN) and New Jam Nut (Heat Code BSL) on Support 1E12-H0026 (Snubber S/N 14303 .

8. Test Conducted: Hydrostatic- ☐ Pneumatic- ☐ Nominal Operating Pressure- ☐ Other- ☐
Pressure N/A psi Test Temperature N/A degrees F Code Case(s) N/A

NIS-2/NR-1 OWNER'S REPORT FOR REPAIRS OR REPLACEMENTS (Back)

PNPP No. 9308 Rev. 9/11/00 NQI-1741

9. Remarks: _____

NO NAMEPLATE/STAMPING PERFORMED DUE TO THE INTERFACE CONTROLS OF RA-2370 BEING IN EFFECT AND JURISDICTIONAL AUTHORITY CONCURRENCE HAVING BEEN RECEIVED.

Note: Attach all applicable Manufacturer's Data Reports. Supplemental sheets such as lists, sketches, or drawings may be used, provided (1) size is 8 1/2 in. x 11 in., (2) information in items 1 through 6 of this report is included on each sheet, and (3) each sheet is numbered and the number of sheets is recorded on the front of this form.

CERTIFICATE OF COMPLIANCE

I, Lester J. Erbacher, certify that to the best of my knowledge and belief the statements made in this report are correct and the repair, modification or replacement of the items described above conforms to Section XI of the ASME Code and to the National Board Inspection Code "NR" rules.

National Board Certificate of Authorization No. 33 to use the "NR stamp expires 9-26, 20 05

Date May 20, 20 03 Signed FENOC-PNPP (name of repair organization) (authorized representative) QE (title)

CERTIFICATE OF INSPECTION/INSERVICE INSPECTION

I, Thomas G. Laps, holding a valid commission issued by The National Board of Boiler and Pressure Vessel Inspectors and certificate of competency issued by the jurisdiction of OHIO and employed by Hartford Steam Boiler Ct. of Hartford, Conn. have inspected the repair, modification or replacement described in this report on May 20, 20 03 and state that to the best of my knowledge and belief, this repair, modification or replacement has been completed in accordance with Section XI of the ASME Code and the National Board Inspection Code "NR" rules.

By signing this certificate, neither the undersigned nor my employer makes any warranty, expressed or implied, concerning the work described in this report. Furthermore, neither the undersigned nor my employer shall be liable in any manner for any personal injury, property damage or loss of any kind arising from or connected with this inspection.

Date May 20, 20 03 Signed Thomas G. Laps (inspector) Commissions NB 9330 "N" "I" "A" Ohio Comm. (National Board (include endorsements), and jurisdiction, and no.)

1E12-272

NIS-2/NR-1 OWNER'S REPORT FOR REPAIRS OR REPLACEMENTS

As required by the Provisions of the ASME Code Section XI

PNPP No. 9308 Rev. 9/11/00 NQI-1741

1. Owner: FIRSTENERGY CORP. Date 05/22/03
   10 Center Road, Perry, Ohio 44081 Sheet 1 of 1

2. Plant: Perry Nuclear Power Plant (PNPP) Unit 1
   10 Center Road, Perry, Ohio 44081 01-015402-000, R-0
   (Repair Org. P.O. No., etc.)
   OPOCR4 20000 8616

3. Work Performed By: FIRSTENERGY Nuclear Operating Company PNPP Type Code Symbol Stamp NR
   10 Center Road, Perry, Ohio 44081 Authorization No. 33
   Expiration Date 9-26-05

4. Identification of System: 1E12 Residual Heat Removal System

5. (a) Applicable Construction Code: ASME Sec III, Subsection NC-2 ,1974 Edition
   NAME/SECTION/DIVISION/CLASS

   Winter 19 75 Addenda Code Case(s) N242, N272, N413, 1644-5, 1728

   (b) Construction Code used for repairs, modifications, or replacements: 1974 (Edition) W75 (Addenda) N/A (Code Case(s))

   (c) ASME Code Section XI applicable for Inservice Inspection: 1989 (Edition) N/A (Addenda) N/A (Code Case(s))

   (d) Applicable Edition of Section XI Utilized for Repairs, Modification, or Replacements:

   19 89 , N/A 19 N/A Addenda N/A (Code Case(s))

   (e) Design Responsibilities FIRSTENERGY Nuclear Operating Company

6. Identification of Components Repaired, Modified, or Replacement Components

Name of Component	Name of Manufacturer	Manufacturer Serial No.	Nat. Board No.	Other ID.	Year Built	Repair, Replacement, or Modification	ASME Code Stamped
Piping System	Pullman Power Products	1E12	N/A	N/A	1985	Replacement	Yes

7. Description of Work: Replaced the original PSA-35 Mech. Snubber (Serial Number 41372) on support 1E12-H0386 with a new Lisega Snubber (Serial Number 02615213/005) per ECP 01-8052.

8. Test Conducted: Hydrostatic- ☐ Pneumatic- ☐ Nominal Operating Pressure- ☐ Other- ☐
   Pressure N/A psi Test Temperature N/A degrees F Code Case(s) N/A

NIS-2/NR-1 OWNER'S REPORT FOR REPAIRS OR REPLACEMENTS (Back)

PNPP No. 9308 Rev. 9/11/00 NQI-1741

9. Remarks: _____

NO NAMEPLATE/STAMPING PERFORMED DUE TO THE INTERFACE CONTROLS OF RA-2370 BEING IN EFFECT AND JURISDICTIONAL AUTHORITY CONCURRENCE HAVING BEEN RECEIVED.

Note: Attach all applicable Manufacturer's Data Reports. Supplemental sheets such as lists, sketches, or drawings may be used, provided (1) size is 8 1/2 in. x 11 in., (2) information in items 1 through 6 of this report is included on each sheet, and (3) each sheet is numbered and the number of sheets is recorded on the front of this form.

CERTIFICATE OF COMPLIANCE

I, Lester J. Erbacher, certify that to the best of my knowledge and belief the statements made in this report are correct and the repair, modification or replacement of the items described above conforms to Section XI of the ASME Code and to the National Board Inspection Code "NR" rules.

National Board Certificate of Authorization No. 33 to use the "NR stamp expires 9-26, 20 05

Date May 22, 20 03 Signed FENOC-PNPP (name of repair organization) (authorized representative) QE (title)

CERTIFICATE OF INSPECTION/INSERVICE INSPECTION

I, Thomas G. Laps, holding a valid commission issued by The National Board of Boiler and Pressure Vessel Inspectors and certificate of competency issued by the jurisdiction of OHIO and employed by Hartford Steam Boiler Ct. of Hartford, Conn. have inspected the repair, modification or replacement described in this report on June 13 20 03 and state that to the best of my knowledge and belief, this repair, modification or replacement has been completed in accordance with Section XI of the ASME Code and the National Board Inspection Code "NR" rules.

By signing this certificate, neither the undersigned nor my employer makes any warranty, expressed or implied, concerning the work described in this report. Furthermore, neither the undersigned nor my employer shall be liable in any manner for any personal injury, property damage or loss of any kind arising from or connected with this inspection.

Date June 13, 20 03 Signed Thomas G. Laps (inspector) Commissions NB 9330 "N" "I" "A" Ohio Comm. (National Board (include endorsements), and jurisdiction, and no.)

1E12-273

NIS-2/NR-1 OWNER'S REPORT FOR REPAIRS OR REPLACEMENTS

As required by the Provisions of the ASME Code Section XI

PNPP No. 9308 Rev. 9/11/00 NQI-1741

1. Owner: FIRSTENERGY CORP.
10 Center Road, Perry, Ohio 44081

Date 05/22/03
Sheet 1 of 1

2. Plant: Perry Nuclear Power Plant (PNPP)
10 Center Road, Perry, Ohio 44081

Unit 1
01-015402-000, R-0
(Repair Org. P.O. No., etc.)
Order # 20005616

3. Work Performed By: FIRSTENERGY Nuclear Operating Company PNPP
10 Center Road, Perry, Ohio 44081

Type Code Symbol Stamp NR
Authorization No. 33
Expiration Date 9-26-05

4. Identification of System: 1E12 Residual Heat Removal System

5. (a) Applicable Construction Code: ASME Sec III, Subsection NC-2 ,1974 Edition
NAME/SECTION/DIVISION/CLASS

Winter 19 75 Addenda Code Case(s) N242, N272, N413,

(b) Construction Code used for repairs, modifications, or replacements: 1974 (Edition) W75 (Addenda) N/A (Code Case(s))

(c) ASME Code Section XI applicable for Inservice Inspection: 1989 (Edition) N/A (Addenda) N/A (Code Case(s))

(d) Applicable Edition of Section XI Utilized for Repairs, Modification, or Replacements:

19 89 , N/A 19 N/A Addenda N/A (Code Case(s))

(e) Design Responsibilities FIRSTENERGY Nuclear Operating Company

6. Identification of Components Repaired, Modified, or Replacement Components

Name of Component	Name of Manufacturer	Manufacturer Serial No.	Nat. Board No.	Other ID.	Year Built	Repair, Replacement, or Modification	ASME Code Stamped
Piping System	Pullman Power Products	1E12	N/A	N/A	1985	Replacement	Yes

7. Description of Work: Replaced the original PSA-35 Mech. Snubber (Serial Number 10812) on support 1E12-H0769 with a new Lisega Snubber (Serial Number 02615213/004) per ECP 01-8052.

8. Test Conducted: Hydrostatic- ☐ Pneumatic- ☐ Nominal Operating Pressure- ☐ Other- ☐

Pressure N/A psi Test Temperature N/A degrees F Code Case(s) N/A

NIS-2/NR-1 OWNER'S REPORT FOR REPAIRS OR REPLACEMENTS (Back)

PNPP No. 9308 Rev. 9/11/00 NQI-1741

9. Remarks: _____

NO NAMEPLATE/STAMPING PERFORMED DUE TO THE INTERFACE CONTROLS OF RA-2370 BEING IN EFFECT AND JURISDICTIONAL AUTHORITY CONCURRENCE HAVING BEEN RECEIVED.

Note: Attach all applicable Manufacturer's Data Reports. Supplemental sheets such as lists, sketches, or drawings may be used, provided (1) size is 8 1/2 in. x 11 in., (2) information in items 1 through 6 of this report is included on each sheet, and (3) each sheet is numbered and the number of sheets is recorded on the front of this form.

CERTIFICATE OF COMPLIANCE

I, Lester J. Erbacher, certify that to the best of my knowledge and belief the statements made in this report are correct and the repair, modification or replacement of the items described above conforms to Section XI of the ASME Code and to the National Board Inspection Code "NR" rules.

National Board Certificate of Authorization No. 33 to use the "NR stamp expires 9-26, 20 05

Date May 22, 20 03 Signed FENOC-PNPP (name of repair organization) (authorized representative) QE (title)

CERTIFICATE OF INSPECTION/INSERVICE INSPECTION

I, Thomas G. Laps, holding a valid commission issued by The National Board of Boiler and Pressure Vessel Inspectors and certificate of competency issued by the jurisdiction of OHIO and employed by Hartford Steam Boiler Ct. of Hartford, Conn. have inspected the repair, modification or replacement described in this report on June 13, 20 03 and state that to the best of my knowledge and belief, this repair, modification or replacement has been completed in accordance with Section XI of the ASME Code and the National Board Inspection Code "NR" rules.

By signing this certificate, neither the undersigned nor my employer makes any warranty, expressed or implied, concerning the work described in this report. Furthermore, neither the undersigned nor my employer shall be liable in any manner for any personal injury, property damage or loss of any kind arising from or connected with this inspection.

Date June 13, 20 03 Signed Thomas G Laps (inspector) Commissions NB 9330 "N" "I" "A" Ohio Comm. (National Board (include endorsements), and jurisdiction, and no.)

1E12-274

NIS-2/NR-1 OWNER'S REPORT FOR REPAIRS OR REPLACEMENTS

As required by the Provisions of the ASME Code Section XI

PNPP No. 9308 Rev. 9/11/00 NQI-1741

1. Owner: FIRSTENERGY CORP.
10 Center Road, Perry, Ohio 44081

Date 06/01/03
Sheet 1 of 1

2. Plant: Perry Nuclear Power Plant (PNPP)
10 Center Road, Perry, Ohio 44081

Unit 1
01-015403-000, R-0
(Repair Org. P.O. No., etc.)
ORDER NO · 20000862

3. Work Performed By: FIRSTENERGY Nuclear Operating Company PNPP
10 Center Road, Perry, Ohio 44081

Type Code Symbol Stamp NR
Authorization No. 33
Expiration Date 9-26-05

4. Identification of System: 1E12 Residual Heat Removal System

5. (a) Applicable Construction Code: ASME Sec III, Subsection NC-2 ,1974 Edition
NAME/SECTION/DIVISION/CLASS

Winter 19 75 Addenda Code Case(s) N272, N242, N413, 1644-5, 1728,

(b) Construction Code used for repairs, modifications, or replacements: 1974 (Edition) W75 (Addenda) N/A (Code Case(s))

(c) ASME Code Section XI applicable for Inservice Inspection: 1989 (Edition) N/A (Addenda) N/A (Code Case(s))

(d) Applicable Edition of Section XI Utilized for Repairs, Modification, or Replacements:
19 89 , N/A 19 N/A Addenda N/A
Code Case(s)

(e) Design Responsibilities FIRSTENERGY Nuclear Operating Company

6. Identification of Components Repaired, Modified, or Replacement Components

Name of Component	Name of Manufacturer	Manufacturer Serial No.	Nat. Board No.	Other ID.	Year Built	Repair, Replacement, or Modification	ASME Code Stamped
Piping System	Pullman Power Products	1E12	N/A	N/A	1985	Replacement	Yes

7. Description of Work: Replaced the load pin on Pipe attachment off the Snubber of piping support 1E12-H0410 with new load pin Heat Number N2186B.

8. Test Conducted: Hydrostatic- ☐ Pneumatic- ☐ Nominal Operating Pressure- ☐ Other- ☐
Pressure N/A psi Test Temperature N/A degrees F Code Case(s) N/A

NIS-2/NR-1 OWNER'S REPORT FOR REPAIRS OR REPLACEMENTS (Back)

PNPP No. 9308 Rev. 9/11/00 NQI-1741

9. Remarks: _____

NO NAMEPLATE/STAMPING PERFORMED DUE TO THE INTERFACE CONTROLS OF RA-2370 BEING IN EFFECT AND JURISDICTIONAL AUTHORITY CONCURRENCE HAVING BEEN RECEIVED.

Note: Attach all applicable Manufacturer's Data Reports. Supplemental sheets such as lists, sketches, or drawings may be used, provided (1) size is 8 1/2 in. x 11 in., (2) information in items 1 through 6 of this report is included on each sheet, and (3) each sheet is numbered and the number of sheets is recorded on the front of this form.

CERTIFICATE OF COMPLIANCE

I, Lester J. Erbacher, certify that to the best of my knowledge and belief the statements made in this report are correct and the repair, modification or replacement of the items described above conforms to Section XI of the ASME Code and to the National Board Inspection Code "NR" rules.

National Board Certificate of Authorization No. 33 to use the "NR stamp expires 9-26, 20 05

Date June 1th, 20 03 Signed FENOC-PNPP (name of repair organization) (authorized representative) QE (title)

CERTIFICATE OF INSPECTION/INSERVICE INSPECTION

I, Thomas G. Laps, holding a valid commission issued by The National Board of Boiler and Pressure Vessel Inspectors and certificate of competency issued by the jurisdiction of OHIO and employed by Hartford Steam Boiler Ct. of Hartford, Conn. have inspected the repair, modification or replacement described in this report on JUNE 6, 20 03 and state that to the best of my knowledge and belief, this repair, modification or replacement has been completed in accordance with Section XI of the ASME Code and the National Board Inspection Code "NR" rules.

By signing this certificate, neither the undersigned nor my employer makes any warranty, expressed or implied, concerning the work described in this report. Furthermore, neither the undersigned nor my employer shall be liable in any manner for any personal injury, property damage or loss of any kind arising from or connected with this inspection.

Date JUNE 6, 20 03 Signed Thomas G. Laps (Inspector) Commissions NB 9330 "N" "I" "A" Ohio Comm. (National Board (include endorsements), and jurisdiction, and no.)

1E12 - 275

NIS-2/NR-1 OWNER'S REPORT FOR REPAIRS OR REPLACEMENTS

As required by the Provisions of the ASME Code Section XI

PNPP No. 9308 Rev. 9/11/00 NQI-1741

1. Owner: FIRSTENERGY CORP.
10 Center Road, Perry, Ohio 44081
Date 6/24/03
Sheet 1 of 1

2. Plant: Perry Nuclear Power Plant (PNPP)
10 Center Road, Perry, Ohio 44081
Unit ONE
W.O. 01-8353 R/0
(Repair Org. P.O. No., etc.)

3. Work Performed By: FIRSTENERGY Nuclear Operating Company PNPP
10 Center Road, Perry, Ohio 44081
Type Code Symbol Stamp NR
Authorization No. 33
Expiration Date 9/26/2005

4. Identification of System: 1E12 RESIDUAL HEAT REMOVAL

5. (a) Applicable Construction Code: ASME Section III NC (NAME/SECTION/DIVISION/CLASS), 1974 Edition

Winter 19 75 Addenda Code Case(s) N-242,N-272,N-224,N-413,N-282,N-275,1644-5,1728

(b) Construction Code used for repairs, modifications, or replacements: 1974 (Edition) Winter 75 (Addenda) N/A (Code Case(s))

(c) ASME Code Section XI applicable for Inservice Inspection: 1989 (Edition) N/A (Addenda) N/A (Code Case(s))

(d) Applicable Edition of Section XI Utilized for Repairs, Modification, or Replacements:

19 89 , N/A 19 NO Addenda N/A (Code Case(s))

(e) Design Responsibilities FIRSTENERGY Nuclear Oprerating Company PNPP

6. Identification of Components Repaired, Modified, or Replacement Components

Name of Component	Name of Manufacturer	Manufacturer Serial No.	Nat. Board No.	Other ID.	Year Built	Repair, Replacement, or Modification	ASME Code Stamped
Check Valve	Borg Warner	49716	N/A	N/A	1979	REPLACEMENT	YES

7. Description of Work: Replaced valve Gate Serial # 200816 VALVE 1E12F0064C 7/18-8-03 TGL 8/2/03

8. Test Conducted: Hydrostatic- ☐ Pneumatic- ☐ Nominal Operating Pressure- ☐ Other- ☒

Pressure N/A psi Test Temperature N/A degrees F Code Case(s) N/A

NIS-2/NR-1 OWNER'S REPORT FOR REPAIRS OR REPLACEMENTS (Back)

PNPP No. 9308 Rev. 9/11/00 NQI-1741

9. Remarks: NONE

NO NAMEPLATE/STAMPING PERFORMED DUE TO THE INTERFACE CONTROLS OF RA-2370 BEING IN EFFECT AND JURISDICTIONAL AUTHORITY CONCURRENCE HAVING BEEN RECEIVED.

Note: Attach all applicable Manufacturer's Data Reports. Supplemental sheets such as lists, sketches, or drawings may be used, provided (1) size is 8 1/2 in. x 11 in., (2) information in items 1 through 6 of this report is included on each sheet, and (3) each sheet is numbered and the number of sheets is recorded on the front of this form.

CERTIFICATE OF COMPLIANCE

I, DAVID K. ASKEW, certify that to the best of my knowledge and belief the statements made in this report are correct and the repair, modification or replacement of the items described above conforms to Section XI of the ASME Code and to the National Board Inspection Code "NR" rules.

National Board Certificate of Authorization No. 33 to use the "NR stamp expires 26 Sept, 20 05

Date 6/24, 20 03 Signed FENOC-PNPP (name of repair organization) David K. Askew (authorized representative) Q.E. (title)

8/8/03 FENOC-PNPP [illegible] QC

CERTIFICATE OF INSPECTION/INSERVICE INSPECTION

I, Thomas G. Laps, holding a valid commission issued by The National Board of Boiler and Pressure Vessel Inspectors and certificate of competency issued by the jurisdiction of OHIO and employed by H.S.B. CT. of HARTFORD, CONN. have inspected the repair, modification or replacement described in this report on July 24, 2003 and state that to the best of my knowledge and belief, this repair, modification or replacement has been completed in accordance with Section XI of the ASME Code and the National Board Inspection Code "NR" rules.

By signing this certificate, neither the undersigned nor my employer makes any warranty, expressed or implied, concerning the work described in this report. Furthermore, neither the undersigned nor my employer shall be liable in any manner for any personal injury, property damage or loss of any kind arising from or connected with this inspection.

Date July 24, 20 03 Signed Thomas G. Laps (inspector) Commissions NB 9330 "N" "I" "A" Ohio Comm. (National Board (include endorsements), and jurisdiction, and no.)

1E12-276

NIS-2/NR-1 OWNER'S REPORT FOR REPAIRS OR REPLACEMENTS

As required by the Provisions of the ASME Code Section XI

PNPP No. 9308 Rev. 9/11/00 NQI-1741

1. Owner: FIRSTENERGY CORP. Date 6/26/03
10 Center Road, Perry, Ohio 44081 Sheet 1 of 2

2. Plant: Perry Nuclear Power Plant (PNPP) Unit ONE
10 Center Road, Perry, Ohio 44081 W.O. 01-15336-000R/0
(Repair Org. P.O. No., etc.)

3. Work Performed By: FIRSTENERGY Nuclear Operating Company PNPP Type Code Symbol Stamp NR
10 Center Road, Perry, Ohio 44081 Authorization No. 33
Expiration Date 9/26/2005

4. Identification of System: 1E12 RESIDUAL HEAT REMOVAL

5. (a) Applicable Construction Code: ASME Section III NC ,1974 Edition
NAME/SECTION/DIVISION/CLASS

Winter 19 75 Addenda Code Case(s) N-242,N-272,N-224,N-413,N-282,N-275,1644-5,1728

(b) Construction Code used for repairs, modifications, or replacements: 1974 (Edition) Winter 75 (Addenda) N/A (Code Case(s))

(c) ASME Code Section XI applicable for Inservice Inspection: 1989 (Edition) N/A (Addenda) N/A (Code Case(s))

(d) Applicable Edition of Section XI Utilized for Repairs, Modification, or Replacements:

19 89 , N/A 19 NO Addenda N/A (Code Case(s))

(e) Design Responsibilities FIRSTENERGY Nuclear Oprerating Company PNPP

6. Identification of Components Repaired, Modified, or Replacement Components

Name of Component	Name of Manufacturer	Manufacturer Serial No.	Nat. Board No.	Other ID.	Year Built	Repair, Replacement, or Modification	ASME Code Stamped
PIPING SYSTEM	PULLMAN POWER	1E12	83	N/A	1985	REPLACEMENT	YES

7. Description of Work: REPLACED RELIEF VALVE 1E12F0055A SN#4 WITH VALVE SN#2. INSTALLED NEW PIPE SPOOL/FLANGE ASM. WELDED TO THE VALVE BODY, UTILIZING WELD ROD ER70S-2 HT#5512 AND E7018 HT#C40618. VT-2 EXAM PERFORMED.

8. Test Conducted: Hydrostatic- ☐ Pneumatic- ☐ Nominal Operating Pressure- ☒ Other- ☐
Pressure 302 psi Test Temperature 64 degrees F Code Case(s) N-416-1

NIS-2/NR-1 OWNER'S REPORT FOR REPAIRS OR REPLACEMENTS (Back)

PNPP No. 9308 Rev. 9/11/00 NQI-1741

9. Remarks: NONE

NO NAMEPLATE/STAMPING PERFORMED DUE TO THE INTERFACE CONTROLS OF RA-2370 BEING IN EFFECT AND JURISDICTIONAL AUTHORITY CONCURRENCE HAVING BEEN RECEIVED.

Note: Attach all applicable Manufacturer's Data Reports. Supplemental sheets such as lists, sketches, or drawings may be used, provided (1) size is 8 1/2 in. x 11 in., (2) information in items 1 through 6 of this report is included on each sheet, and (3) each sheet is numbered and the number of sheets is recorded on the front of this form.

CERTIFICATE OF COMPLIANCE

I, DAVID K. ASKEW, certify that to the best of my knowledge and belief the statements made in this report are correct and the repair, modification or replacement of the items described above conforms to Section XI of the ASME Code and to the National Board Inspection Code "NR" rules.

National Board Certificate of Authorization No. 33 to use the "NR stamp expires 26 Sept., 20 05

Date 6/26, 20 03 Signed FENOC-PNPP (name of repair organization) David K. Askew (authorized representative) QE (title)

CERTIFICATE OF INSPECTION/INSERVICE INSPECTION

I, Thomas G. Laps, holding a valid commission issued by The National Board of Boiler and Pressure Vessel Inspectors and certificate of competency issued by the jurisdiction of OHIO and employed by H.S.B. CT. of Hartford, Conn. have inspected the repair, modification or replacement described in this report on July 30, 20 03 and state that to the best of my knowledge and belief, this repair, modification or replacement has been completed in accordance with Section XI of the ASME Code and the National Board Inspection Code "NR" rules.

By signing this certificate, neither the undersigned nor my employer makes any warranty, expressed or implied, concerning the work described in this report. Furthermore, neither the undersigned nor my employer shall be liable in any manner for any personal injury, property damage or loss of any kind arising from or connected with this inspection.

Date July 30, 20 03 Signed Thomas G. Laps (inspector) Commissions NB 9330 "N" "I" "A" Ohio Comm. (National Board (include endorsements), and jurisdiction, and no.)

1E12-276
Page 2 of 2

FORM NV-1 MANUFACTURERS' DATA REPORT FOR SAFETY AND SAFETY RELIEF VALVES*

(As Required by the Provisions of the ASME Code, Section III, Div. I)

1. Manufactured by TARGET ROCK CORP., 1966E. Broadhollow Rd., E.Farmingdale, NY
(Name and Address of Manufacturer)
2. Manufactured for Cleveland Electric Illuminating Co., Cleveland, Ohio
(Name and Address of Purchaser or Owner)
3. Location of Installation Perry Nuclear Power Plant, Units 1 & 2, North Perry Ohio
(Name and Address)
4. -- (CRN) 4x6 REH-C-1 (Drawing No.) -- (Nat'L Brd. No.) 1981 (Year Built)
5. Valve 76H-013 (Model No., Series No.) Identifying Nos. 1 thru 4 (Manufacturers' Serial No.)
Type Safety Relief
Safety, Safety Relief; Pilot; Power Actuated
Orifice Size 2.94 inch Nominal Inlet Size 4 inch Outlet Size 6 inch
6. Set Pressure (PSIG) 485 Rated Temperature 480 °F
Stamped Capacity 138,600 lbs/hr @ 10 % Overpressure Blowdown (PSIG) 24
Sat. Steam
Hydrostatic Test (PSIG) Inlet 1100 Outlet 425
(Applicable to valves for closed systems only)
7. Pressure Retaining Pieces

	Serial No. or Identification	Material Specification Incl. Type or Grade
Body	p/n 400037-1 S/N 1 thru 4	ASME SA 105
Bonnet ~~xxxxxx~~	p/n 300393-1 1 thru 4	ASME SA 105
Support Rods	--	--
Nozzle	p/n 202111-1 1 thru 4	ASME SA 479, 316L
Disc	p/n 2021041 1 thru 4	ASME SA 564, GR. 630
Spring Washers	--	--
Adjusting Screw	--	--
Spindle	--	--
Spring	--	--
Bolting	Bolt Sock HD 3/4-10-3½	ASME SA 193, B-7
Other Pieces	Bolt Sock HD 3/4-10 5L	ASME SA 193, B-7
	NUT, Hex 3/4-10-2B	ASME SA 194 GR. 2
	Flange p/n 2021141 s/n 1 thru 4	ASME SA 105
	TOP Plate p/n 202108-1 --	ASME SA 105
	BOSS p/n 202367-1 s/n 1 thru 4	ASME SA 105

GILBERT/COMMONWEALTH 2710 G/C-QA

* Supplemental sheets in form of lists, sketches or drawings may be used provided (1) size is 8-1/2" × 11", (2) information in items 1-2 on this data report is included on each sheet, and (3) each sheet is numbered and number of sheets is recorded at top of this form.

(1/76) This form (E00042) may be obtained from the Order Dept., ASME, 345 E. 47 St., New York, N.Y. 10017

FORM NV-1 (Back)

CERTIFICATE OF COMPLIANCE

We certify that the statements made in this report are correct and that this valve conforms to the rules of construction of the ASME Code for Nuclear Power Plant Components, Section III, Div. 1., 1974 Edition, Addenda Sum. 1975 (Date), Code Case No. ---.

Date 6-10-81 Signed Target Rock Corp. (Manufacturer) by G. Abruzzo, Mgr. Quality

Our ASME Certificate of Authorization No. 1949 to use the NV (NV) symbol expires 12/9/83 (Date)

CERTIFICATION OF DESIGN

Design information on file at Target Rock Corporation

Stress analysis report (Class 1 only) on file at ---

Design specifications certified by[1] Jan Paul Sockel

PE State Pa. Reg. No. 20130E

Stress report certified by[1] ---

PE State --- Reg. No. ---

[1] Signature not required—list name only.

CERTIFICATE OF SHOP INSPECTION

I, the undersigned, holding a valid commission issued by the National Board of Boiler and Pressure Vessel Inspectors and the State or Province of New York and employed by Commercial Union Ins. of Boston, Mass. have inspected the pump, or valve, described in this Data Report on 6/10, 1981 and state that to the best of my knowledge and belief, the Manufacturer has constructed this pump, or valve, in accordance with the ASME Code for Nuclear Power Plant Components.

By signing this certificate, neither the Inspector nor his employer makes any warrant, expressed or implied, concerning the equipment described in this Data Report. Furthermore, neither the Inspector nor his employer shall be liable in any manner for any personal injury or property damage or loss of any kind arising from or connected with this inspection.

Date 6/10, 1981

Signed William A. Roland (Inspector) Commissions NEW YORK STATE COMMISSION NO. 2288 ALSO COMMISSIONED IN Penn., Ohio & Conn. (Nat'l. Bd., State Prov. and No.)

GILBERT/COMMONWEALTH 9128 G/C-QR

1E12-277

NIS-2/NR-1 OWNER'S REPORT FOR REPAIRS OR REPLACEMENTS

As required by the Provisions of the ASME Code Section XI

PNPP No. 9308 Rev. 9/11/00 NQI-1741

1. Owner: FIRSTENERGY CORP. — Date 7-6-03
   10 Center Road, Perry, Ohio 44081 — Sheet 1 OF 2
2. Plant: Perry Nuclear Power Plant (PNPP) — Unit 0NE
   10 Center Road, Perry, Ohio 44081 — WO 01-17175 REV. 0 (Repair Org. P.O. No., etc.)
3. Work Performed By: FIRSTENERGY Nuclear Operating Company PNPP — Type Code Symbol Stamp NR
   10 Center Road, Perry, Ohio 44081 — Authorization No. 33
   Expiration Date 09-26-2005
4. Identification of System: 1E12 Residual Heat Removal
5. (a) Applicable Construction Code: ASME SECTION III NC (NAME/SECTION/DIVISION/CLASS), 1974 Edition TGL 8/6/03 gum 8/6/03
   WINTER 19 75 Addenda Code Case(s) 1644-5, 1728, N-413, N-242, N-272, N-275, N224, N282
   (b) Construction Code used for repairs, modifications, or replacements: 1974 (Edition) WINTER 75 (Addenda) see above (Code Case(s))
   (c) ASME Code Section XI applicable for Inservice Inspection: 1989 (Edition) no (Addenda) n/a (Code Case(s))
   (d) Applicable Edition of Section XI Utilized for Repairs, Modification, or Replacements:
   19 89, n/a 19 n/a Addenda n/a Code Case(s)
   (e) Design Responsibilities FIRSTENERGY NUCLEAR OPERATING COMPANY PNPP
6. Identification of Components Repaired, Modified, or Replacement Components

Name of Component	Name of Manufacturer	Manufacturer Serial No.	Nat. Board No.	Other ID.	Year Built	Repair, Replacement, or Modification	ASME Code Stamped
Piping System	Pullman Power	1E12	~~na~~ 83 gum 8/6/03 TGL 8/6/03	1E12 F0063B	1985	replacement	yes

7. Description of Work: Replaced 8" check valve SN 2-11372-01 with new 8" check valve SN 2-51001A
8. Test Conducted: Hydrostatic- ☐ Pneumatic- ☐ Nominal Operating Pressure- ☒ Other- ☐
   Pressure 150 psi Test Temperature N.O.T. degrees F Code Case(s) N/A

9. Remarks: NONE

NO NAMEPLATE/STAMPING PERFORMED DUE TO THE INTERFACE CONTROLS OF RA-2370 BEING IN EFFECT AND JURISDICTIONAL AUTHORITY CONCURRENCE HAVING BEEN RECEIVED.

Note: Attach all applicable Manufacturer's Data Reports. Supplemental sheets such as lists, sketches, or drawings may be used, provided (1) size is 8 1/2 in. x 11 in., (2) information in items 1 through 6 of this report is included on each sheet, and (3) each sheet is numbered and the number of sheets is recorded on the front of this form.

CERTIFICATE OF COMPLIANCE

I, John W. Messenger, certify that to the best of my knowledge and belief the statements made in this report are correct and the repair, modification or replacement of the items described above conforms to Section XI of the ASME Code and to the National Board Inspection Code "NR" rules.

National Board Certificate of Authorization No. 33 to use the "NR stamp expires 9-26, 20 05

Date 8-6, 20 03 Signed FENOC-PNPP (name of repair organization) (authorized representative) QE (title)

CERTIFICATE OF INSPECTION/INSERVICE INSPECTION

I, Thomas G. Laps, holding a valid commission issued by The National Board of Boiler and Pressure Vessel Inspectors and certificate of competency issued by the jurisdiction of OHIO and employed by H.S.B. CT. of Hartford, Conn. have inspected the repair, modification or replacement described in this report on Aug. 6, 20 03 and state that to the best of my knowledge and belief, this repair, modification or replacement has been completed in accordance with Section XI of the ASME Code and the National Board Inspection Code "NR" rules.

By signing this certificate, neither the undersigned nor my employer makes any warranty, expressed or implied, concerning the work described in this report. Furthermore, neither the undersigned nor my employer shall be liable in any manner for any personal injury, property damage or loss of any kind arising from or connected with this inspection.

Date Aug. 6, 20 03 Signed (inspector) Commissions NB9330"N" "I" "A" OHIO COMM. (National Board (include endorsements), and jurisdiction, and no.)

1E12-277
PG 2 OF 2

FORM NPV-1 CERTIFICATE HOLDERS DATA REPORT FOR NUCLEAR PUMPS OR VALVES*
As Required by the Provisions of the ASME Code, Section III, Division 1

1. Manufactured and certified by: Atwood & Morrill Co., Inc., 285 Canal St., Salem, MA
(name and address of N Certificate Holder)

2. Manufactured for First Energy Corporation, 10 Center Rd., P.O. Box 97, North Perry, OH 44081
(name and address of Purchaser)

3. Location of installation Perry Nuclear Power Plant, 10 Center Road, Dock No. 1, North Perry OH 44081
(name and address)

4. Model No., Series No., or Type Dual Plate Check Valve Drawing 50079-A Rev. 03 CRN N/A

5. ASME Code, Section III, Division 1: 1974 (edition) Winter 1975 (addenda date) 2 (class) N/A (Code Case no.)

6. Pump or Valve Valve Nominal inlet size 8 (in.) Outlet size 8 (in.)

7. Material: Body SA216-WCB Bonnet N/A Disk SA487-CA6NM Bolting N/A

(a) Cert. Holder's Serial No.	(b) Nat'l Board No.	(c) Body Serial No.	(d) Bonnet Serial No.	(e) Disk Serial No.
2-51001-A	N/A	HT. #: 0264 S/N: R71	N/A	HT. #: 0263 S/N: R73 & R74

* Supplemental information in form of lists, sketches, or drawings may be used provided (1) size 8 ½ x 11, (2) information in items 1 through 4 on this Data Report is included on each sheet, (3) each sheet is numbered and the number of sheets is recorded at the top of this form

(12/88) This form (E00037) may be obtained from the Order Dept., ASME, 22 Law Drive, Box 2300, Fairfield, NJ 07007-2300.

FORM NPV-1 (Back – Pg. 2 of 2)

Certificate Holder's Serial No. 2-51001-A

8. Design conditions 500 (pressure) psi 480 (temperature) °F or valve pressure class 300 (1)

9. Cold working pressure 740 psi at 100°F

10. Hydrostatic test 1125 psi. Disk differential test pressure 825 psi

11. Remarks: Pin Retainers SA 479-410 HT# : 150082 TR# 117D

CERTIFICATION OF DESIGN

Design specification certified by Hiram R. Reppert (when applicable) P.E. State PA Reg. no. 24928-E

Design report certified by N/A (when applicable) P.E. State N/A Reg. no. N/A

CERTIFICATE OF COMPLIANCE

We certify that the statements made in this report are correct and that pump or valve conforms to the rules for construction of the ASME Code, Section III, Division 1.

N Certificate of Authorization No. N-2606 Expires 6-13-04

Date 7/26/02 Name Atwood & Morrill Co., Inc. (N Certificate Holder) Signed (authorized representative)

CERTIFICATE OF INSPECTION

I, the undersigned, holding a valid commission issued by the National Board of Boiler and Pressure Vessel Inspectors and the state or province of New York and employed by HSBCT of Hartford, CT have inspected the pump, or valve, described in this Data Report on 7/26/02, and state that to the best of my knowledge and belief, the Certificate Holder has constructed this pump, or valve, in accordance with the ASME Code, Section III, Division 1.

By signing this Certificate, neither the inspector nor his employer makes any warranty, expressed or implied, concerning the equipment described in this Data Report. Furthermore, neither the inspector nor his employer shall be liable in any manner for any personal injury or property damage or loss of any kind arising from or connected with this inspection.

Date 7/26/02 Signed (Authorized Inspector) Commission NY5070 A,N (Nat'l. Bd. (incl. endorsement(s) state or prov. and no.)

(1) For manually operated valves only.

1E12-278

NIS-2/NR-1 OWNER'S REPORT FOR REPAIRS OR REPLACEMENTS

As required by the Provisions of the ASME Code Section XI

PNPP No. 9308 Rev. 9/11/00 NQI-1741

1. Owner: FIRSTENERGY CORP. Date 8/5/03
10 Center Road, Perry, Ohio 44081 Sheet 1 of 1

2. Plant: Perry Nuclear Power Plant (PNPP) Unit one
10 Center Road, Perry, Ohio 44081 01-17151
(Repair Org. P.O. No., etc.)

3. Work Performed By: FIRSTENERGY Nuclear Operating Company PNPP Type Code Symbol Stamp NR
10 Center Road, Perry, Ohio 44081 Authorization No. 33
Expiration Date 9/26/2005

4. Identification of System: Residual Heat Removal

5. (a) Applicable Construction Code: ASME Section III NC ,1974 Edition
NAME/SECTION/DIVISION/CLASS

Winter 19 75 Addenda Code Case(s) 1644-5,1728,N224,N242,N272,N275,N282 N413

(b) Construction Code used for repairs, modifications, or replacements: 1974 (Edition) Winter 75 (Addenda) N/A (Code Case(s))

(c) ASME Code Section XI applicable for Inservice Inspection: 1989 (Edition) N/A (Addenda) N/A (Code Case(s))

(d) Applicable Edition of Section XI Utilized for Repairs, Modification, or Replacements:
19 89 , N/A 19 N/A Addenda N/A (Code Case(s))

(e) Design Responsibilities FIRSTENERGY Nuclear Oprerating Company PNPP

6. Identification of Components Repaired, Modified, or Replacement Components

Name of Component	Name of Manufacturer	Manufacturer Serial No.	Nat. Board No.	Other ID.	Year Built	Repair, Replacement, or Modification	ASME Code Stamped
Piping system	Pullman Power	1E12	83	1E12D00 03A	1985	Replacement	Yes

7. Description of Work: Installed new orifice plate HT # 877831 using one stud 1 1/8-8 HT# 1x35 and two heavy hex nuts 1 1/8" HT # 2EB. Plate has a finished width of 7/16".

8. Test Conducted: Hydrostatic- ☐ Pneumatic- ☐ Nominal Operating Pressure- ☐ Other- ☐
Pressure N/A psi Test Temperature N/A degrees F Code Case(s) N/A

NIS-2/NR-1 OWNER'S REPORT FOR REPAIRS OR REPLACEMENTS (Back)

PNPP No. 9308 Rev. 9/11/00 NQI-1741

9. Remarks:

NO NAMEPLATE/STAMPING PERFORMED DUE TO THE INTERFACE CONTROLS OF RA-2370 BEING IN EFFECT AND JURISDICTIONAL AUTHORITY CONCURRENCE HAVING BEEN RECEIVED.

Note: Attach all applicable Manufacturer's Data Reports. Supplemental sheets such as lists, sketches, or drawings may be used, provided (1) size is 8 1/2 in. x 11 in., (2) information in items 1 through 6 of this report is included on each sheet, and (3) each sheet is numbered and the number of sheets is recorded on the front of this form.

CERTIFICATE OF COMPLIANCE

I, Michael J Tepsick, certify that to the best of my knowledge and belief the statements made in this report are correct and the repair, modification or replacement of the items described above conforms to Section XI of the ASME Code and to the National Board Inspection Code "NR" rules.

National Board Certificate of Authorization No. 33 to use the "NR stamp expires 26 Sept., 20 05

Date 5 Aug., 20 03 Signed FENOC-PNPP (name of repair organization) [signature] (authorized representative) QC (title)

CERTIFICATE OF INSPECTION/INSERVICE INSPECTION

I, Thomas G Laps, holding a valid commission issued by The National Board of Boiler and Pressure Vessel Inspectors and certificate of competency issued by the jurisdiction of OHIO and employed by HSB CT. of Hartford, Conn. have inspected the repair, modification or replacement described in this report on AUG. 6, 20 03 and state that to the best of my knowledge and belief, this repair, modification or replacement has been completed in accordance with Section XI of the ASME Code and the National Board Inspection Code "NR" rules.

By signing this certificate, neither the undersigned nor my employer makes any warranty, expressed or implied, concerning the work described in this report. Furthermore, neither the undersigned nor my employer shall be liable in any manner for any personal injury, property damage or loss of any kind arising from or connected with this inspection.

Date Aug. 6, 20 03 Signed Thomas G Laps (inspector) Commissions NB 9330 "N" "I" "A" Ohio Comm. (National Board (include endorsements), and jurisdiction, and no.)

1E22-054

NIS-2/NR-1 OWNER'S REPORT FOR REPAIRS OR REPLACEMENTS

As required by the Provisions of the ASME Code Section XI

PNPP No. 9308 Rev. 9/11/00 NQI-1741

1. Owner: FIRSTENERGY CORP.
10 Center Road, Perry, Ohio 44081

Date 05/27/03
Sheet 1 of 2

2. Plant: Perry Nuclear Power Plant (PNPP)
10 Center Road, Perry, Ohio 44081

Unit 1
03-004877-000, R-0
(Repair Org. P.O. No., etc.)
ORDER# 200010477

3. Work Performed By: FIRSTENERGY Nuclear Operating Company PNPP
10 Center Road, Perry, Ohio 44081

Type Code Symbol Stamp NR
Authorization No. 33
Expiration Date 9-26-05

4. Identification of System: 1E22 High Pressure Core Spray System

5. (a) Applicable Construction Code: ASME Sec III, Subsection NC/NF-2 ,1974 Edition
NAME/SECTION/DIVISION/CLASS

Winter 19 75 Addenda Code Case(s)
N272, 1644-5, 1683-1, N413

(b) Construction Code used for repairs, modifications, or replacements: 1974 (Edition) W75 (Addenda) N/A (Code Case(s))

(c) ASME Code Section XI applicable for Inservice Inspection: 1989 (Edition) N/A (Addenda) N/A (Code Case(s))

(d) Applicable Edition of Section XI Utilized for Repairs, Modification, or Replacements:
19 89 , N/A 19 N/A Addenda N/A (Code Case(s))

(e) Design Responsibilities FIRSTENERGY Nuclear Operating Company

6. Identification of Components Repaired, Modified, or Replacement Components

Name of Component	Name of Manufacturer	Manufacturer Serial No.	Nat. Board No.	Other ID.	Year Built	Repair, Replacement, or Modification	ASME Code Stamped
Piping System	Pullman Power Products	1E22	N/A	N/A	1985	Replacement	Yes

7. Description of Work: Replaced the original PSA-10 Mech. Snubber (Serial Number 15454) on piping support 1E22-H0034 with Snubber Serial Number 11273.

8. Test Conducted: Hydrostatic- ☐ Pneumatic- ☐ Nominal Operating Pressure- ☐ Other- ☐
Pressure N/A psi Test Temperature N/A degrees F Code Case(s) N/A

NIS-2/NR-1 OWNER'S REPORT FOR REPAIRS OR REPLACEMENTS (Back)

PNPP No. 9308 Rev. 9/11/00 NQI-1741

9. Remarks: _____

NO NAMEPLATE/STAMPING PERFORMED DUE TO THE INTERFACE CONTROLS OF RA-2370 BEING IN EFFECT AND JURISDICTIONAL AUTHORITY CONCURRENCE HAVING BEEN RECEIVED.

Note: Attach all applicable Manufacturer's Data Reports. Supplemental sheets such as lists, sketches, or drawings may be used, provided (1) size is 8 1/2 in. x 11 in., (2) information in items 1 through 6 of this report is included on each sheet, and (3) each sheet is numbered and the number of sheets is recorded on the front of this form.

CERTIFICATE OF COMPLIANCE

I, ~~Lester J. Erbacher~~ MICHAEL J TAPSICK MTS-QC, certify that to the best of my knowledge and belief the statements made in this report are correct and the repair, modification or replacement of the items described above conforms to Section XI of the ASME Code and to the National Board Inspection Code "NR" rules.

National Board Certificate of Authorization No. 33 to use the "NR stamp expires 9-26, 20 05

Date ~~May 27~~ 8 AUG., 20 03 Signed FENOC-PNPP (name of repair organization) [signature] (authorized representative) QE (title)

CERTIFICATE OF INSPECTION/INSERVICE INSPECTION

I, Thomas G. Laps, holding a valid commission issued by The National Board of Boiler and Pressure Vessel Inspectors and certificate of competency issued by the jurisdiction of OHIO and employed by Hartford Steam Boiler Ct. of Hartford, Conn. have inspected the repair, modification or replacement described in this report on JUNE 4, 20 03 and state that to the best of my knowledge and belief, this repair, modification or replacement has been completed in accordance with Section XI of the ASME Code and the National Board Inspection Code "NR" rules.

By signing this certificate, neither the undersigned nor my employer makes any warranty, expressed or implied, concerning the work described in this report. Furthermore, neither the undersigned nor my employer shall be liable in any manner for any personal injury, property damage or loss of any kind arising from or connected with this inspection.

Date JUNE 4, 20 03 Signed Thomas G Laps (inspector) Commissions NB 9330 "N" "I" "A" Ohio Comm. (National Board (include endorsements), and jurisdiction, and no.)

Thomas G Laps ANII NB9330 " " " " OHIO COMM " 8/8/03

FORM NF-1 NPT CERTIFICATE HOLDERS' DATA REPORT FOR COMPONENT SUPPORTS*

As Required by the Provisions of the ASME Code Rules, Section III, Division 1

1. Manufactured by Pacific Scientific 1346 S. State College Blvd. Anaheim, Ca. 92803
(Name and address of NPT Certificate Holder)

2. Manufactured for Power Piping Co. 829 Beaver Ave. Pittsburgh, PA 15233
(Name and address of purchaser or owner)

IE 82-054 2 of 2

3. Location of Installation Unknown

4. Identification

	(a) Component Support I.D. No.	(b) Canadian Registration No.	(c) Applicable Drawings with Last Rev. & Date	(d) Stress Report or Load Capacity Data Sheet	(e) Type of Component Support	(f) Class	(g) Nat'l Bd. No.	(h) Year Built
(1)	11270-11273	None	1801103-07-H	DR-1352-Rev. B	Linear	1	None	1981
(2)								
(3)								
(4)								
(5)								
(6)								
(7)								
(8)								
(9)								
(10)								

JAN 13 1982

DOCUMENT REVIEWED BY 49 DATE 1/13/82

5. Remarks

CERTIFICATE OF COMPLIANCE

We certify that the statements made in this report are correct and that these components supports conform to the rules of construction of the ASME Code for Nuclear Power Plant Components, Section III, Division 1, Edition 1974 Addenda Winter '75
Code Case No. 1644-6

Date 7/27/81 Signed Pacific Scientific (NPT Certificate Holder) By Robert A. Nelson (Date)

Our ASME Certificate of Authorization No. 1198 to use the Component Support (NPT) Symbol expires Aug. 4, 1984 (Date)

CERTIFICATION OF DESIGN

Design Information on File at Pacific Scientific

Stress Report or Load Capacity Data Sheets on File at Pacific Scientific

Filed Per NA 3256

Design Specifications Certified by (1) Leo E. Ay PE State California

Reg. No. 13533

Stress Analysis Report or Load Capacity Data Sheets Certified by (1) Leo E. Ay

PE State California Reg. No. 13533

(1) Print name only, signature not required

Supplemental sheets in form of lists, sketches or drawings may be used provided (1) size is 8½ x 11 in., (2) information in items 1, 2, 4c, 4g on this Data Report is included on each sheet, and (3) each sheet is numbered and number of sheets is recorded at top of this form.

(10/77) This form (E00076) may be obtained from the Order Dept., ASME, 345 E. 47th St., New York, N.Y. 10017

FORM NF-1 (Back)

CERTIFICATE OF SHOP INSPECTION

I, the undersigned, holding a valid commission issued by the National Board of Boiler and Pressure Vessel Inspectors and the State or Province of California and employed by HSBI&I Co. of Hartford, Ct. have inspected the component supports described in this Data Report on 10-5 1981 and state that to the best of my knowledge and belief, the NPT Certificate Holder has constructed these component supports in accordance with the ASME Code for Nuclear Power Plant Components.

By signing this certificate, neither the Inspector nor his employer makes any warranty, expressed or implied, concerning the component supports described in this Data Report. Furthermore, neither the Inspector nor his employer shall be liable in any manner for any personal injury or property damage or a loss of any kind arising from or connected with this inspection.

Date 10-5-81

Signed [signature] Commissions Ca 1445 IW 7885

(Nat'l Bd. State, Prov. and No.)

CERTIFICATION OF FIELD INSPECTION

I, the undersigned, holding a valid commission issued by the National Board of Boiler and Pressure Vessel Inspectors and the State or Province of _____ and employed by _____ of _____ have compared the statements in this Data Report with the described component supports and state that the parts referred to as data items _____ not included in the certificate of shop inspection, have been inspected by me and that to the best of my knowledge and belief the NPT Certificate Holder has constructed these component supports in accordance with the ASME Code for Nuclear Power Plant Components.

By signing this certificate, neither the Inspector nor his employer makes any warranty, expressed or implied, concerning the component supports described in this Data Report. Furthermore, neither the Inspector nor his employer shall be liable in any manner for any personal injury or property damage or a loss of any kind arising from or connected with this inspection.

Date _____

Signed _____ Commission _____

(Nat'l Bd. State, Prov. and No.)

1E22-055

NIS-2/NR-1 OWNER'S REPORT FOR REPAIRS OR REPLACEMENTS

As required by the Provisions of the ASME Code Section XI

PNPP No. 9308 Rev. 9/11/00 NQI-1741

1. Owner: FIRSTENERGY CORP.
10 Center Road, Perry, Ohio 44081

Date 05/27/03
Sheet 1 of 2

2. Plant: Perry Nuclear Power Plant (PNPP)
10 Center Road, Perry, Ohio 44081

Unit 1
03-004824-000, R-0
(Repair Org. P.O. No., etc.)
ORDER# 20001039 2

3. Work Performed By: FIRSTENERGY Nuclear Operating Company PNPP
10 Center Road, Perry, Ohio 44081

Type Code Symbol Stamp NR
Authorization No. 33
Expiration Date 9-26-05

4. Identification of System: 1E22 High Pressure Core Spray System

5. (a) Applicable Construction Code: ASME Sec III, Subsection NC/NF-2 ,1974 Edition
NAME/SECTION/DIVISION/CLASS

Winter 19 75 Addenda Code Case(s)
N272, 1644-5, 1683-1, N224-1, N240, N242, N275, AND N413

(b) Construction Code used for repairs, modifications, or replacements: 1974 (Edition) W75 (Addenda) N/A (Code Case(s))

(c) ASME Code Section XI applicable for Inservice Inspection: 1989 (Edition) N/A (Addenda) N/A (Code Case(s))

(d) Applicable Edition of Section XI Utilized for Repairs, Modification, or Replacements:
1989, N/A 19 N/A Addenda N/A (Code Case(s))

(e) Design Responsibilities FIRSTENERGY Nuclear Operating Company

6. Identification of Components Repaired, Modified, or Replacement Components

Name of Component	Name of Manufacturer	Manufacturer Serial No.	Nat. Board No.	Other ID.	Year Built	Repair, Replacement, or Modification	ASME Code Stamped
Piping System	Pullman Power Products	1E22	N/A	N/A	1985	Replacement	Yes

7. Description of Work: Replaced PSA-10 Mech. Snubber (Serial Number 16635) on piping support 1E22-H0032 with Snubber Serial Number 11256.

8. Test Conducted: Hydrostatic- ☐ Pneumatic- ☐ Nominal Operating Pressure- ☐ Other- ☐
Pressure N/A psi Test Temperature N/A degrees F Code Case(s) N/A

NIS-2/NR-1 OWNER'S REPORT FOR REPAIRS OR REPLACEMENTS (Back)

PNPP No. 9308 Rev. 9/11/00 NQI-1741

9. Remarks: _____

NO NAMEPLATE/STAMPING PERFORMED DUE TO THE INTERFACE CONTROLS OF RA-2370 BEING IN EFFECT AND JURISDICTIONAL AUTHORITY CONCURRENCE HAVING BEEN RECEIVED.

Note: Attach all applicable Manufacturer's Data Reports. Supplemental sheets such as lists, sketches, or drawings may be used, provided (1) size is 8 1/2 in. x 11 in., (2) information in items 1 through 6 of this report is included on each sheet, and (3) each sheet is numbered and the number of sheets is recorded on the front of this form.

CERTIFICATE OF COMPLIANCE

I, Lester J. Erbacher, certify that to the best of my knowledge and belief the statements made in this report are correct and the repair, modification or replacement of the items described above conforms to Section XI of the ASME Code and to the National Board Inspection Code "NR" rules.

National Board Certificate of Authorization No. 33 to use the "NR stamp expires 9-26, 20 05

Date May 27, 20 03 Signed FENOC-PNPP (name of repair organization) [signature] (authorized representative) QE (title)

CERTIFICATE OF INSPECTION/INSERVICE INSPECTION

I, Thomas G. Laps, holding a valid commission issued by The National Board of Boiler and Pressure Vessel Inspectors and certificate of competency issued by the jurisdiction of OHIO and employed by Hartford Steam Boiler Ct. of Hartford, Conn. have inspected the repair, modification or replacement described in this report on June 9, 20 03 and state that to the best of my knowledge and belief, this repair, modification or replacement has been completed in accordance with Section XI of the ASME Code and the National Board Inspection Code "NR" rules.

By signing this certificate, neither the undersigned nor my employer makes any warranty, expressed or implied, concerning the work described in this report. Furthermore, neither the undersigned nor my employer shall be liable in any manner for any personal injury, property damage or loss of any kind arising from or connected with this inspection.

Date June 9, 20 03 Signed Thomas G. Laps (inspector) Commissions NB 9330 "N" "I" "A" Ohio Comm. (National Board (include endorsements), and jurisdiction, and no.)

FORM NF-1 NPT CERTIFICATE HOLDERS' DATA REPORT FOR COMPONENT SUPPORTS*

As Required by the Provisions of the ASME Code Rules, Section III, Division 1

93

1. Manufactured by Pacific Scientific 1346 S. State College Blvd. Anaheim, Ca. 92803
(Name and address of NPT Certificate Holder)

2. Manufacturer for Power Piping Co. 829 Beaver Ave. Pittsburgh, PA 15233
(Name and address of purchaser or owner)

IE22-0545 SHT 2 of 2

3. Location of Installation Unknown

4. Identification

(a) Component Support I.D. No.	(b) Canadian Registration No.	(c) Applicable Drawings with Last Rev. & Date	(d) Stress Report or Load Capacity Data Sheet	(e) Type of Component Support	(f) Class	(g) Nat'l Board No.	(h) Year Built
(1) 11249-11257	None	1801103-07-H	DR-1352-REV. B	Linear	1	None	1981
(2)							
(3)							
(4)							
(5)							
(6)							
(7)							
(8)							
(9)							
(10)							

JUN 9 1982

DOCUMENT REVIEWED BY 1983 PP QA

5. Remarks:

CERTIFICATE OF COMPLIANCE

We certify that the statements made in this report are correct and that these components supports conform to the rules of construction of the ASME Code for Nuclear Power Plant Components, Section III, Division 1, Edition 1974, Addenda Winter '75 (Date). Code Case No. 1644-6

Date 9/17/81 Signed Pacific Scientific (NPT Certificate Holder) by Rosalie A. Nava

Our ASME Certificate of Authorization No. 1198 to use the Component Support (NPT)

Symbol expires Aug. 4, 1984 (Date).

CERTIFICATION OF DESIGN

Design Information on File at Pacific Scientific

Stress Report or Load Capacity Data Sheets on File at:
Pacific Scientific
Filed Per NA 3256

Design Specifications Certified by (1) Leo E. Ay PE State California

Reg. No. 13533.

Stress Analysis Report or Load Capacity Data Sheets Certified by (1) Leo E. Ay

PE State California Reg. No. 13533.

(1) List name only, signature not required.

Power Piping
DEC 7 1981
QA Approve
TPH

Supplemental sheets in form of lists, sketches or drawings may be used provided (1) size is 8½ in., (2) information in items 1, 2, 4c, 4g on this Data Report is included on each sheet, and (3) each sheet is numbered and number of sheets is recorded at top of this form.

(10/77) This form (E00075) may be obtained from the Order Dept., ASME, 345 E. 47th St., New York, N.Y. 10017

FORM NF-1 (Back)

CERTIFICATE OF SHOP INSPECTION

I, the undersigned, holding a valid commission issued by the National Board of Boiler and Pressure Vessel Inspectors and the State or Province of California and employed by HSBI&I Co. of Hartford, CT have inspected the component supports described in this Data Report on 10-8, 1981 and state that to the best of my knowledge and belief the NPT Certificate Holder has constructed these component supports in accordance with the ASME Code for Nuclear Power Plant Components.

By signing this certificate, neither the Inspector nor his employer makes any warranty, expressed or implied, concerning the component supports described in this Data Report. Furthermore, neither the Inspector nor his employer shall be liable in any manner for any personal injury or property damage or a loss of any kind arising from or connected with this inspection.

Date 10-8-81.

Signed [signature] Commissions Ca 1445 WC 2856
(Nat'l Bd., State, Prov., and No.)

CERTIFICATION OF FIELD INSPECTION

I, the undersigned, holding a valid commission issued by the National Board of Boiler and Pressure Vessel Inspectors and the State or Province of _____ and employed by _____ of _____ have compared the statements in this Data Report with the described component supports and state that the parts referred to as data items _____, not included in the certificate of shop inspection, have been inspected by me and that to the best of my knowledge and belief the NPT Certificate Holder has constructed these component supports in accordance with the ASME Code for Nuclear Power Plant Components.

By signing this certificate neither the Inspector nor his employer makes any warranty, expressed or implied, concerning the component supports described in this Data Report. Furthermore, neither the Inspector nor his employer shall be liable in any manner for any personal injury or property damage or a loss of any kind arising from or connected with this inspection.

Date _____.

Signed _____ Commissions _____
(Nat'l Bd., State, Prov., and No.)

1E22-056

NIS-2/NR-1 OWNER'S REPORT FOR REPAIRS OR REPLACEMENTS

As required by the Provisions of the ASME Code Section XI

PNPP No. 9308 Rev. 9/11/00 NQI-1741

1. Owner: FIRSTENERGY CORP.
10 Center Road, Perry, Ohio 44081
Date 06/01/03
Sheet 1 of 1

2. Plant: Perry Nuclear Power Plant (PNPP)
10 Center Road, Perry, Ohio 44081
Unit 1
01-017947-000, R-0
(Repair Org. P.O. No., etc.)
ORDER No. 20001146 3

3. Work Performed By: FIRSTENERGY Nuclear Operating Company PNPP
10 Center Road, Perry, Ohio 44081
Type Code Symbol Stamp NR
Authorization No. 33
Expiration Date 9-26-05

4. Identification of System: 1E22 High Pressure Core Spray System

5. (a) Applicable Construction Code: ASME Sec III, Subsection NC-2 ,1974 Edition
NAME/SECTION/DIVISION/CLASS

Winter 19 75 Addenda Code Case(s) N-272, N-242, N-224-1, AND N-275

(b) Construction Code used for repairs, modifications, or replacements: 1974 Edition W75 Addenda N/A Code Case(s)

(c) ASME Code Section XI applicable for Inservice Inspection: 1989 Edition N/A Addenda N/A Code Case(s)

(d) Applicable Edition of Section XI Utilized for Repairs, Modification, or Replacements:

19 89 , N/A 19 N/A Addenda N/A
Code Case(s)

(e) Design Responsibilities FIRSTENERGY Nuclear Operating Company

6. Identification of Components Repaired, Modified, or Replacement Components

Name of Component	Name of Manufacturer	Manufacturer Serial No.	Nat. Board No.	Other ID.	Year Built	Repair, Replacement, or Modification	ASME Code Stamped
Piping System	Pullman Power Products	1E22 (1E22A)	86	N/A	1984	Replacement	Yes

7. Description of Work: Replaced Restricting Orifice 1E22-D0005 with new orifice Heat Number 800901-1A

8. Test Conducted: Hydrostatic- ☐ Pneumatic- ☐ Nominal Operating Pressure- ☒ Other- ☐

Pressure 300 psi Test Temperature 67 degrees F Code Case(s) N/A

NIS-2/NR-1 OWNER'S REPORT FOR REPAIRS OR REPLACEMENTS (Back)

PNPP No. 9308 Rev. 9/11/00 NQI-1741

9. Remarks: _____

NO NAMEPLATE/STAMPING PERFORMED DUE TO THE INTERFACE CONTROLS OF RA-2370 BEING IN EFFECT AND JURISDICTIONAL AUTHORITY CONCURRENCE HAVING BEEN RECEIVED.

Note: Attach all applicable Manufacturer's Data Reports. Supplemental sheets such as lists, sketches, or drawings may be used, provided (1) size is 8 1/2 in. x 11 in., (2) information in items 1 through 6 of this report is included on each sheet, and (3) each sheet is numbered and the number of sheets is recorded on the front of this form.

CERTIFICATE OF COMPLIANCE

I, Lester J. Erbacher, certify that to the best of my knowledge and belief the statements made in this report are correct and the repair, modification or replacement of the items described above conforms to Section XI of the ASME Code and to the National Board Inspection Code "NR" rules.

National Board Certificate of Authorization No. 33 to use the "NR stamp expires 9-26, 20 05

Date June 1st, 20 03 Signed FENOC-PNPP (name of repair organization) (authorized representative) QE (title)

CERTIFICATE OF INSPECTION/INSERVICE INSPECTION

I, Thomas G. Laps, holding a valid commission issued by The National Board of Boiler and Pressure Vessel Inspectors and certificate of competency issued by the jurisdiction of OHIO and employed by Hartford Steam Boiler Ct. of Hartford, Conn. have inspected the repair, modification or replacement described in this report on June 6, 20 03 and state that to the best of my knowledge and belief, this repair, modification or replacement has been completed in accordance with Section XI of the ASME Code and the National Board Inspection Code "NR" rules.

By signing this certificate, neither the undersigned nor my employer makes any warranty, expressed or implied, concerning the work described in this report. Furthermore, neither the undersigned nor my employer shall be liable in any manner for any personal injury, property damage or loss of any kind arising from or connected with this inspection.

Date June 6, 20 03 Signed Thomas G. Laps (inspector) Commissions NB 9330 "N" "I" "A" Ohio Comm. (National Board (include endorsements), and jurisdiction, and no.)

1E32-104

NIS-2/NR-1 OWNER'S REPORT FOR REPAIRS OR REPLACEMENTS

As required by the Provisions of the ASME Code Section XI

PNPP No. 9308 Rev. 9/11/00 NQI-1741

1. Owner: FIRSTENERGY CORP.
10 Center Road, Perry, Ohio 44081

Date 5/10/03
Sheet 1 of 1

2. Plant: Perry Nuclear Power Plant (PNPP)
10 Center Road, Perry, Ohio 44081

Unit One
WO 03-1260-000
(Repair Org. P.O. No., etc.)

3. Work Performed By: FIRSTENERGY Nuclear Operating Company PNPP
10 Center Road, Perry, Ohio 44081

Type Code Symbol Stamp NR
Authorization No. 33
Expiration Date 9/26/2005

4. Identification of System: MSIV Leakage Control

5. (a) Applicable Construction Code: ASME Section III NC ,1974 Edition
NAME/SECTION/DIVISION/CLASS

Winter 19 75 Addenda Code Case(s) N272, 1644-5, N413

(b) Construction Code used for repairs, modifications, or replacements: 1974 Edition, Winter 75 Addenda, n/a Code Case(s)

(c) ASME Code Section XI applicable for Inservice Inspection: 1989 Edition, N/A Addenda, n/a Code Case(s)

(d) Applicable Edition of Section XI Utilized for Repairs, Modification, or Replacements:

19 89 , N/A 19 N/A Addenda n/a Code Case(s)

(e) Design Responsibilities FIRSTENERGY Nuclear Oprerating Company PNPP

6. Identification of Components Repaired, Modified, or Replacement Components

Name of Component	Name of Manufacturer	Manufacturer Serial No.	Nat. Board No.	Other ID.	Year Built	Repair, Replacement, or Modification	ASME Code Stamped
Piping System	Pullman Power	1E32	104	1E32	1985	Modification	yes

7. Description of Work: Removed supports per modification ECP-02-0328. See remarks for support identification.

8. Test Conducted: Hydrostatic- ☐ Pneumatic- ☐ Nominal Operating Pressure- ☐ Other- ☐

Pressure n/a psi Test Temperature n/a degrees F Code Case(s) n/a

NIS-2/NR-1 OWNER'S REPORT FOR REPAIRS OR REPLACEMENTS (Back)

PNPP No. 9308 Rev. 9/11/00 NQI-1741

9. Remarks: Removed the following supports from piping that was previously abandoned: 1E32H270, 1E32H137,1E32H138,1E32H139,1E32H140,1E32H141,1E32H142,1E32H152,1E32H153,1E32H154,1E32H164 1E32H165,1E32H167,1E32H230,1E32H231,1E32H233,1E32H234,1E32H235,1E32H237,1E32H238 1E32H240,1E32H243,1E32H244,1E32H245,1E32H246,1E32H247,1E32H248,1E32H250,1E32H251. NO NAMEPLATE/STAMPING PERFORMED DUE TO THE INTERFACE CONTROLS OF RA-2370 BEING IN EFFECT AND JURISDICTIONAL AUTHORITY CONCURRENCE HAVING BEEN RECEIVED.

Note: Attach all applicable Manufacturer's Data Reports. Supplemental sheets such as lists, sketches, or drawings may be used, provided (1) size is 8 1/2 in. x 11 in., (2) information in items 1 through 6 of this report is included on each sheet, and (3) each sheet is numbered and the number of sheets is recorded on the front of this form.

CERTIFICATE OF COMPLIANCE

I, Michael J Tepsick, certify that to the best of my knowledge and belief the statements made in this report are correct and the repair, modification or replacement of the items described above conforms to Section XI of the ASME Code and to the National Board Inspection Code "NR" rules.

National Board Certificate of Authorization No. 33 to use the "NR stamp expires 26 Sept., 20 05

Date 10 May, 20 03 Signed FENOC-PNPP (name of repair organization) Michael J Tepsick (authorized representative) QC (title)

CERTIFICATE OF INSPECTION/INSERVICE INSPECTION

I, Thomas G Laps, holding a valid commission issued by The National Board of Boiler and Pressure Vessel Inspectors and certificate of competency issued by the jurisdiction of OHIO and employed by HSB CT. of HARTFORD, CT. have inspected the repair, modification or replacement described in this report on MAY 19, 2003 and state that to the best of my knowledge and belief, this repair, modification or replacement has been completed in accordance with Section XI of the ASME Code and the National Board Inspection Code "NR" rules.

By signing this certificate, neither the undersigned nor my employer makes any warranty, expressed or implied, concerning the work described in this report. Furthermore, neither the undersigned nor my employer shall be liable in any manner for any personal injury, property damage or loss of any kind arising from or connected with this inspection.

Date MAY 19, 20 03 Signed Thomas G Laps (inspector) Commissions NB 9330 "N" "I" "A" Ohio Comm. (National Board (include endorsements), and jurisdiction, and no.)

1E51-124

NIS-2/NR-1 OWNER'S REPORT FOR REPAIRS OR REPLACEMENTS

As required by the Provisions of the ASME Code Section XI

PNPP No. 9308 Rev. 9/11/00 NQI-1741

1. Owner: FIRSTENERGY CORP.
10 Center Road, Perry, Ohio 44081

Date 4/2/02
Sheet 1 of 1

2. Plant: Perry Nuclear Power Plant (PNPP)
10 Center Road, Perry, Ohio 44081

Unit 1
W.O. 01-8061 Rev o
(Repair Org. P.O. No., etc.)

3. Work Performed By: FIRSTENERGY Nuclear Operating Company PNPP
10 Center Road, Perry, Ohio 44081

Type Code Symbol Stamp NR
Authorization No. 33
Expiration Date 9/26/2002

4. Identification of System: 1E51 Reactor Core Isolation

5. (a) Applicable Construction Code: ASME Section III NC ,1974 Edition
NAME/SECTION/DIVISION/CLASS

Winter 19 75 Addenda Code Case(s) N224, N241, N242, N275, N272, 1644-5, 1728, N413.

(b) Construction Code used for repairs, modifications, or replacements: 1974 (Edition) Winter 75 (Addenda) n/a (Code Case(s))

(c) ASME Code Section XI applicable for Inservice Inspection: 1989 (Edition) N/A (Addenda) n/a (Code Case(s))

(d) Applicable Edition of Section XI Utilized for Repairs, Modification, or Replacements:
19 89 , N/A 19 N/A Addenda n/a (Code Case(s))

(e) Design Responsibilities FIRSTENERGY Nuclear Oprerating Company PNPP

6. Identification of Components Repaired, Modified, or Replacement Components

Name of Component	Name of Manufacturer	Manufacturer Serial No.	Nat. Board No.	Other ID.	Year Built	Repair, Replacement, or Modification	ASME Code Stamped
Piping System	Pullman Power	1E51	N/A	1E51	1980	Replacement	Yes

7. Description of Work: Replaced bolted flange Valve 1E51F0011 with new valve Serial # 1-11683-01 HT# 99105.

8. Test Conducted: Hydrostatic- ☒ Pneumatic- ☐ Nominal Operating Pressure- ☒ Other- ☐
Pressure 28.8 psi Test Temperature 94 degrees F Code Case(s) N/A

NIS-2/NR-1 OWNER'S REPORT FOR REPAIRS OR REPLACEMENTS (Back)

PNPP No. 9308 Rev. 9/11/00 NQI-1741

9. Remarks: None

NO NAMEPLATE/STAMPING PERFORMED DUE TO THE INTERFACE CONTROLS OF RA-2370 BEING IN EFFECT AND JURISDICTIONAL AUTHORITY CONCURRENCE HAVING BEEN RECEIVED.

Note: Attach all applicable Manufacturer's Data Reports. Supplemental sheets such as lists, sketches, or drawings may be used, provided (1) size is 8 1/2 in. x 11 in., (2) information in items 1 through 6 of this report is included on each sheet, and (3) each sheet is numbered and the number of sheets is recorded on the front of this form.

CERTIFICATE OF COMPLIANCE

I, David E. Lindquist, certify that to the best of my knowledge and belief the statements made in this report are correct and the repair, modification or replacement of the items described above conforms to Section XI of the ASME Code and to the National Board Inspection Code "NR" rules.

National Board Certificate of Authorization No. 33 to use the "NR stamp expires 26 Sept., 20 02

Date April 2, 20 02 Signed FENOC-PNPP (name of repair organization) (authorized representative) QE (title)

4/2/02 FENOC PNPP QC

CERTIFICATE OF INSPECTION/INSERVICE INSPECTION

I, L. D. Bussard, holding a valid commission issued by The National Board of Boiler and Pressure Vessel Inspectors and certificate of competency issued by the jurisdiction of OHIO and employed by Factory Mutual Ins. Co. of Johnston, RI have inspected the repair, modification or replacement described in this report on 4-3, 20 02 and state that to the best of my knowledge and belief, this repair, modification or replacement has been completed in accordance with Section XI of the ASME Code and the National Board Inspection Code "NR" rules.

By signing this certificate, neither the undersigned nor my employer makes any warranty, expressed or implied, concerning the work described in this report. Furthermore, neither the undersigned nor my employer shall be liable in any manner for any personal injury, property damage or loss of any kind arising from or connected with this inspection.

Date 4-3, 20 02 Signed (inspector) Commissions NB8563 NI OHO Conn (National Board (include endorsements), and jurisdiction, and no.)

1E51-125

NIS-2/NR-1 OWNER'S REPORT FOR REPAIRS OR REPLACEMENTS

As required by the Provisions of the ASME Code Section XI

PNPP No. 9308 Rev. 9/11/00 NQI-1741

1. Owner: FIRSTENERGY CORP.
10 Center Road, Perry, Ohio 44081

Date 8/19/02
Sheet 1 of 2

2. Plant: Perry Nuclear Power Plant (PNPP)
10 Center Road, Perry, Ohio 44081

Unit 1
CR 02-0082
(Repair Org. P.O. No., etc.)

3. Work Performed By: FIRSTENERGY Nuclear Operating Company PNPP
10 Center Road, Perry, Ohio 44081

Type Code Symbol Stamp NR
Authorization No. 33
Expiration Date 9/26/2005

4. Identification of System: IE51 Reactor Core Isolation Cooling

5. (a) Applicable Construction Code: ASME Section III NC ,1974 Edition
NAME/SECTION/DIVISION/CLASS

Summer 19 74 Addenda Code Case(s) None

(b) Construction Code used for repairs, modifications, or replacements: 1974 Edition, Winter 75 Addenda, None Code Case(s)

(c) ASME Code Section XI applicable for Inservice Inspection: 1989 Edition, N/A Addenda, None Code Case(s)

(d) Applicable Edition of Section XI Utilized for Repairs, Modification, or Replacements:

19 89 , N/A 19 N/A Addenda None Code Case(s)

(e) Design Responsibilities FIRSTENERGY Nuclear Oprerating Company PNPP

6. Identification of Components Repaired, Modified, or Replacement Components

Name of Component	Name of Manufacturer	Manufacturer Serial No.	Nat. Board No.	Other ID.	Year Built	Repair, Replacement, or Modification	ASME Code Stamped
Pump	Bingham-Willamette	15210030	450	N/A	1978	Modification	Yes

7. Description of Work: See Remarks.

8. Test Conducted: Hydrostatic- ☐ Pneumatic- ☐ Nominal Operating Pressure- ☐ Other- ☐

Pressure N/A psi Test Temperature N/A degrees F Code Case(s) N/A

NIS-2/NR-1 OWNER'S REPORT FOR REPAIRS OR REPLACEMENTS (Back)

PNPP No. 9308 Rev. 9/11/00 NQI-1741

9. Remarks: The upper design temperature limit for the Reactor Core Isolation Cooling pump is changed from 140 F to 150 F. The engineering evaluation for this change is documented in NCC CR 02-00082. Pump is asset number 1E51C0001.

NO NAMEPLATE/STAMPING PERFORMED DUE TO THE INTERFACE CONTROLS OF RA-2370 BEING IN EFFECT AND JURISDICTIONAL AUTHORITY CONCURRENCE HAVING BEEN RECEIVED.

Note: Attach all applicable Manufacturer's Data Reports. Supplemental sheets such as lists, sketches, or drawings may be used, provided (1) size is 8 1/2 in. x 11 in., (2) information in items 1 through 6 of this report is included on each sheet, and (3) each sheet is numbered and the number of sheets is recorded on the front of this form.

CERTIFICATE OF COMPLIANCE

I, Michael J Tepsick, certify that to the best of my knowledge and belief the statements made in this report are correct and the repair, modification or replacement of the items described above conforms to Section XI of the ASME Code and to the National Board Inspection Code "NR" rules.

National Board Certificate of Authorization No. 33 to use the "NR stamp expires 26 Sept., 20 05

Date 9 SEPT., 2002 Signed FENOC-PNPP (name of repair organization) [signature] (authorized representative) SR. QUALITY TECH. (title)

CERTIFICATE OF INSPECTION/INSERVICE INSPECTION

I, Thomas G Laps, holding a valid commission issued by The National Board of Boiler and Pressure Vessel Inspectors and certificate of competency issued by the jurisdiction of OHIO and employed by Factory Mutual Ins. Co. of Johnston, RI have inspected the repair, modification or replacement described in this report on SEPT 9, 2002 and state that to the best of my knowledge and belief, this repair, modification or replacement has been completed in accordance with Section XI of the ASME Code and the National Board Inspection Code "NR" rules.

By signing this certificate, neither the undersigned nor my employer makes any warranty, expressed or implied, concerning the work described in this report. Furthermore, neither the undersigned nor my employer shall be liable in any manner for any personal injury, property damage or loss of any kind arising from or connected with this inspection.

Date 9/9, 2002 Signed Thomas G Laps (inspector) Commissions NB 9330 "N" "I" "A" Ohio Comm. (National Board (include endorsements), and jurisdiction, and no.)

1ES1-125 SHEET 2 OF 2

FORM NPV-1 MANUFACTURERS DATA REPORT FOR NUCLEAR PUMPS OR VALVES
As Required by the Provisions of the ASME Code Rules

1. Manufactured by Bingham-Willamette Company, Portland, Oregon (Name & Address of Manufacturer) Order No. 15210030

2. Manufactured for General Electric Company, San Jose, California (Name & Address) Order No. 205-AG-534

3. Owner Cleveland Electric Illuminating Company

4. Location of Plant North Perry, Ohio

5. Pump or Valve Identification 15210030

Reactor Core Isolation Cooling Pump
(Brief description of service for which equipment was designed)

(a) Drawing No. Z-6819 Prepared by Arthur Bergseng

(b) National Board No. NB-450

6. Design Conditions 1525 psi (Pressure) 40-140 °F (Temperature)

7. The material, design, construction, and workmanship complies with ASME Code Section III Class II

Edition 1974, Addenda Date 1974 Summer, Case No. NA

Mark No.	Material Spec. No.	Manufacturer	Remarks
(a) Castings			
(b) Forgings			
76976-1	SA-105-S74	Gulf Forge	Barrel Forging
631107	SA-105-S74	Gulf Forge	Nozzle (Discharge)
630763	SA-105-S74	Gulf Forge	Cover (Drive End)
615146	SA-105-S74	Coulter	Branch Connections
KCXC	SA-234-WPB-S74	Grinnell	Suction Elbow
BDW-76	SA-105-S74	Grinnell	Flange
623215	SA-182-304-S74	Durametallic	Seal Gland
214287	SA-105-S74	Coulter	Nozzle (Suction)
BAH-76	SA-105-S74	Grinnell	Flange (By Pass)
630763	SA-105-S74	Gulf Forge	Cover (Outboard)

PAGE 1 of 2

HJB 4-6-78

GE PO AG 534 PAGE 2

FORM NPV-1

Mark No.	Material Spec No	Manufacturer	Remarks
(c) Bolting			
8097477	SA-193-B7-S74	Coast Indus. Supply	Studs
57853249	SA-194-2H-S74	Coast Indus. Supply	Nuts
(d) Other Parts			
KE-5383	SA-106-Gr.B-S74	Capitol	Pipe

1. Hydrostatic test 2280 psi.

CERTIFICATION OF DESIGN

Design information on file at Bingham-Willamette Company

Stress analysis report on file at Bingham-Willamette Company

Design specifications certified by J.C. Kelso (1) Prof. Eng. State CAL Reg. No. 13738

Stress analysis report certified by NA (1) Prof. Eng. State _____ Reg. No. _____

(1) Signature not required. List name only.

We certify that the statements made in this report are correct.

Date April 5 19____ Signed Bingham-Willamette (Manufacturer) By George Ollem

Certificate of Authorization No. N-1654 expires 2-28-80

CERTIFICATE OF SHOP INSPECTION

I, the undersigned, holding a valid commission issued by the National Board of Boiler and Pressure Vessel Inspectors and/or the State of province of Oregon and employed by Department of Commerce have inspected the equipment described in this Data Report on 4/7 19 78, and state that to the best of my knowledge and belief, the Manufacturer has constructed this equipment in accordance with the applicable Subsections of ASME Code, Section III.

By signing this certificate, neither the Inspector nor his employer makes any warranty, expressed or implied, concerning the equipment described in this Data Report. Furthermore, neither the Inspector nor his employer shall be liable in any manner for any personal injury or property damage or a loss of any kind arising from or connected with this inspection.

Date 4/7 19 78

R. Brooks (Inspector) Commissions NB 12257 (National Board, State, Province and No.)

PAGE 2 of 2

A.E.E.&R. HJB 4-6-78

1E51-126

NIS-2/NR-1 OWNER'S REPORT FOR REPAIRS OR REPLACEMENTS

As required by the Provisions of the ASME Code Section XI

PNPP No. 9308 Rev. 9/11/00 NQI-1741

1. Owner: FIRSTENERGY CORP. Date 03/14/03
10 Center Road, Perry, Ohio 44081 Sheet 1 of 2

2. Plant: Perry Nuclear Power Plant (PNPP) Unit 1
10 Center Road, Perry, Ohio 44081 02-002776-000, Rev. 0
(Repair Org. P.O. No., etc.)

3. Work Performed By: FIRSTENERGY Nuclear Operating Company PNPP Type Code Symbol Stamp NR
10 Center Road, Perry, Ohio 44081 Authorization No. 33
Expiration Date 9-26-05

4. Identification of System: 1E51 RX Core Isolating Cooling System

5. (a) Applicable Construction Code: ASME Sec III, Subsection NC Class-2 ,1974 Edition
NAME/SECTION/DIVISION/CLASS

Winter 19 75 Addenda Code Case(s) N-272, 1644-5, 1728, N-413

(b) Construction Code used for repairs, modifications, or replacements: 1974 (Edition) W75 (Addenda) N/A (Code Case(s))

(c) ASME Code Section XI applicable for Inservice Inspection: 1989 (Edition) N/A (Addenda) N/A (Code Case(s))

(d) Applicable Edition of Section XI Utilized for Repairs, Modification, or Replacements:

19 89 , N/A 19 N/A Addenda N/A (Code Case(s))

(e) Design Responsibilities FIRSTENERGY Nuclear Operating Company

6. Identification of Components Repaired, Modified, or Replacement Components

Name of Component	Name of Manufacturer	Manufacturer Serial No.	Nat. Board No.	Other ID.	Year Built	Repair, Replacement, or Modification	ASME Code Stamped
Piping System	Pullman Power Piping	1E51	N/A	N/A	1982	Replacement	Yes

7. Description of Work: Replaced PSA-1 Snubber Serial Number 21936 with replacement PSA-1 Snubber Serial Number 22903 on Support 1E51-H0156.

8. Test Conducted: Hydrostatic- ☐ Pneumatic- ☐ Nominal Operating Pressure- ☐ Other- ☐

Pressure N/A psi Test Temperature N/A degrees F Code Case(s) N/A

NIS-2/NR-1 OWNER'S REPORT FOR REPAIRS OR REPLACEMENTS (Back)

PNPP No. 9308 Rev. 9/11/00 NQI-1741

9. Remarks:

NO NAMEPLATE/STAMPING PERFORMED DUE TO THE INTERFACE CONTROLS OF RA-2370 BEING IN EFFECT AND JURISDICTIONAL AUTHORITY CONCURRENCE HAVING BEEN RECEIVED.

Note: Attach all applicable Manufacturer's Data Reports. Supplemental sheets such as lists, sketches, or drawings may be used, provided (1) size is 8 1/2 in. x 11 in., (2) information in items 1 through 6 of this report is included on each sheet, and (3) each sheet is numbered and the number of sheets is recorded on the front of this form.

CERTIFICATE OF COMPLIANCE

I, Lester J. Erbacher, certify that to the best of my knowledge and belief the statements made in this report are correct and the repair, modification or replacement of the items described above conforms to Section XI of the ASME Code and to the National Board Inspection Code "NR" rules.

National Board Certificate of Authorization No. 33 to use the "NR stamp expires 9-26, 20 05

Date March 14, 20 03 Signed FENOC-PNPP (name of repair organization) (authorized representative) QE (title)

CERTIFICATE OF INSPECTION/INSERVICE INSPECTION

I, Thomas G. Laps, holding a valid commission issued by The National Board of Boiler and Pressure Vessel Inspectors and certificate of competency issued by the jurisdiction of OHIO and employed by Factory Mutual Ins. Co. of Johnston, RI have inspected the repair, modification or replacement described in this report on APRIL 5 20 03 and state that to the best of my knowledge and belief, this repair, modification or replacement has been completed in accordance with Section XI of the ASME Code and the National Board Inspection Code "NR" rules.

By signing this certificate, neither the undersigned nor my employer makes any warranty, expressed or implied, concerning the work described in this report. Furthermore, neither the undersigned nor my employer shall be liable in any manner for any personal injury, property damage or loss of any kind arising from or connected with this inspection.

Date APRIL 5 20 03 Signed Thomas G Laps (inspector) Commissions NB 9330 "N" "I" "A" Ohio Comm. (National Board (include endorsements), and jurisdiction, and no.)

1E51-126 2 of 2 80060

FORM NF-1 NPT CERTIFICATE HOLDERS' DATA REPORT FOR COMPONENT SUPPORTS*
As Required by the Provisions of the ASME Code Rules, Section III, Division 1

Kin-Tech Division

1. Manufactured by Pacific Scientific 1346 S. State College Blvd. Anaheim, CA 92803
(Name and address of NPT Certificate Holder)

2. Manufacturer for Power Piping Co. 829 Beaver Ave. Pittsburgh, PA 15233
(Name and address of purchaser or owner)

3. Location of Installation Unknown

4. Identification

	(a) Component Support I.D. No.	(b) Canadian Registration No.	(c) Applicable Drawings with Last Rev. & Date	(d) Stress Report or Load Capacity Data Sheet	(e) Type of Component Support	(f) Class	(g) Nat'l Board No.	(h) Year Built
(1)	22896	NONE	1801102-05-K	DR1351 Rev. A	Linear	1	NONE	1982
(2)	thru							
(3)	22917							
(4)								
(5)								
(6)								
(7)								
(8)								
(9)								
(10)								

5. Remarks:

CERTIFICATE OF COMPLIANCE

We certify that the statements made in this report are correct and that these components supports conform to the rules of construction of the ASME Code for Nuclear Power Plant Components, Section III, Division 1, Edition 1974, Addenda Winter '75 (Date)
Code Case No. 1644-6

Date 12-13-82 Signed Pacific Scientific (NPT Certificate Holder) by Rosalie A. Nadeg

Our ASME Certificate of Authorization No. 1198 to use the "NPT" (NPT)

Symbol expires Aug. 4, 1984 (Date)

CERTIFICATION OF DESIGN

Design Information on File at Pacific Scientific

Stress Report or Load Capacity Data Sheets on File at
Pacific Scientific
Filed Per NCA 3256

Design Specifications Certified by (1) Leo E. Ay PE State California

Reg. No. 13533

Stress Analysis Report or Load Capacity Data Sheets Certified by (1) Leo E. Ay

PE State California Reg. No. 13533

(1) List name only, signature not required.

TPH

AUG 2 5 1983

DOCUMENT REVIEWED BY 4993 PNPP CAI/QA

*Supplemental sheets in form of lists, sketches or drawings may be used provided (1) size is 8½ in., (2) information in items 1, 2, 4c, 4g on this Data Report is included on each sheet, and (3) each sheet is numbered and number of sheets is recorded at top of this form.

... 345 E. 47th St., New York, N.Y. 10017

4

80060

FORM NF-1 (Back)

CERTIFICATE OF SHOP INSPECTION

I, the undersigned, holding a valid commission issued by the National Board of Boiler and Pressure Vessel Inspectors and the State or Province of Pennsylvania and employed by HSBI&I Co. of Hartford, CT have inspected the component supports described in this Data Report on 12-14, 19 82 and state that to the best of my knowledge and belief the NPT Certificate Holder has constructed these component supports in accordance with the ASME Code for Nuclear Power Plant Components.

By signing this certificate, neither the Inspector nor his employer makes any warranty, expressed or implied, concerning the component supports described in this Data Report. Furthermore, neither the Inspector nor his employer shall be liable in any manner for any personal injury or property damage or a loss of any kind arising from or connected with this inspection.

Date 12-14-82.

Signed W.H. Bucher Commissions WC 2379/CA 1280
(Nat'l Bd., State, Prov., and No.)

CERTIFICATION OF FIELD INSPECTION

I, the undersigned, holding a valid commission issued by the National Board of Boiler and Pressure Vessel Inspectors and the State or Province of _____ and employed by _____ of _____ have compared the statements in this Data Report with the described component supports and state that the parts referred to as data items _____, not included in the certificate of shop inspection, have been inspected by me and that to the best of my knowledge and belief the NPT Certificate Holder has constructed these component supports in accordance with the ASME Code for Nuclear Power Plant Components.

By signing this certificate neither the Inspector nor his employer makes any warranty, expressed or implied, concerning the component supports described in this Data Report. Furthermore, neither the Inspector nor his employer shall be liable in any manner for any personal injury or property damage or a loss of any kind arising from or connected with this inspection.

Date _____.

Signed _____ Commissions _____
(Nat'l Bd., State, Prov., and No.)

TPH

AUG 25 1983

DOCUMENT REVIEWED BY 4993 PNPP QAI/QA

01 391

5

1E51-127

NIS-2/NR-1 OWNER'S REPORT FOR REPAIRS OR REPLACEMENTS

As required by the Provisions of the ASME Code Section XI

PNPP No. 9308 Rev. 9/11/00 NQI-1741

1. Owner: FIRSTENERGY CORP. Date 05/27/03
10 Center Road, Perry, Ohio 44081 Sheet 1 of 2

2. Plant: Perry Nuclear Power Plant (PNPP) Unit 1
10 Center Road, Perry, Ohio 44081 03-004898-000, R-0
(Repair Org. P.O. No., etc.)
ORDER No. 200010584

3. Work Performed By: FIRSTENERGY Nuclear Operating Company PNPP Type Code Symbol Stamp NR
10 Center Road, Perry, Ohio 44081 Authorization No. 33
Expiration Date 9-26-05

4. Identification of System: 1E51 Reactor Core Isolation Cooling System

5. (a) Applicable Construction Code: ASME Sec III, Subsection NB/NF-CI.-1 ,1974 Edition
NAME/SECTION/DIVISION/CLASS

Winter 19 75 Addenda Code Case(s) N272, N413, 1644-5, and 1728

(b) Construction Code used for repairs, modifications, or replacements: 1974 (Edition) W75 (Addenda) N/A (Code Case(s))

(c) ASME Code Section XI applicable for Inservice Inspection: 1989 (Edition) N/A (Addenda) N/A (Code Case(s))

(d) Applicable Edition of Section XI Utilized for Repairs, Modification, or Replacements:
19 89 , N/A 19 N/A Addenda N/A (Code Case(s))

(e) Design Responsibilities FIRSTENERGY Nuclear Operating Company

6. Identification of Components Repaired, Modified, or Replacement Components

Name of Component	Name of Manufacturer	Manufacturer Serial No.	Nat. Board No.	Other ID.	Year Built	Repair, Replacement, or Modification	ASME Code Stamped
Piping System	Pullman Power Products	1E51	N/A	N/A	1985	Replacement	Yes

7. Description of Work: Replaced original PSA-10 Snubber Serial Number 14301 on piping support 1E51-H0110 with Snubber Serial Number 11035

8. Test Conducted: Hydrostatic- ☐ Pneumatic- ☐ Nominal Operating Pressure- ☐ Other- ☐
Pressure N/A psi Test Temperature N/A degrees F Code Case(s) N/A

NIS-2/NR-1 OWNER'S REPORT FOR REPAIRS OR REPLACEMENTS (Back)

PNPP No. 9308 Rev. 9/11/00 NQI-1741

9. Remarks: _____

NO NAMEPLATE/STAMPING PERFORMED DUE TO THE INTERFACE CONTROLS OF RA-2370 BEING IN EFFECT AND JURISDICTIONAL AUTHORITY CONCURRENCE HAVING BEEN RECEIVED.

Note: Attach all applicable Manufacturer's Data Reports. Supplemental sheets such as lists, sketches, or drawings may be used, provided (1) size is 8 1/2 in. x 11 in., (2) information in items 1 through 6 of this report is included on each sheet, and (3) each sheet is numbered and the number of sheets is recorded on the front of this form.

CERTIFICATE OF COMPLIANCE

I, Lester J. Erbacher, certify that to the best of my knowledge and belief the statements made in this report are correct and the repair, modification or replacement of the items described above conforms to Section XI of the ASME Code and to the National Board Inspection Code "NR" rules.

National Board Certificate of Authorization No. 33 to use the "NR stamp expires 9-26, 20 05

Date May 27, 20 03 Signed FENOC-PNPP (name of repair organization) [signature] (authorized representative) QE (title)

CERTIFICATE OF INSPECTION/INSERVICE INSPECTION

I, Thomas G. Laps, holding a valid commission issued by The National Board of Boiler and Pressure Vessel Inspectors and certificate of competency issued by the jurisdiction of OHIO and employed by Hartford Steam Boiler Ct. of Hartford, Conn. have inspected the repair, modification or replacement described in this report on June 6, 20 03 and state that to the best of my knowledge and belief, this repair, modification or replacement has been completed in accordance with Section XI of the ASME Code and the National Board Inspection Code "NR" rules.

By signing this certificate, neither the undersigned nor my employer makes any warranty, expressed or implied, concerning the work described in this report. Furthermore, neither the undersigned nor my employer shall be liable in any manner for any personal injury, property damage or loss of any kind arising from or connected with this inspection.

Date June 6, 20 03 Signed Thomas G. Laps (inspector) Commissions NB 9330 "N" "I" "A" Ohio Comm. (National Board (include endorsements), and jurisdiction, and no.)

1ES1-127
SHEET 2 of 2

FORM NF-1 NPT CERTIFICATE HOLDERS' DATA REPORT FOR COMPONENT SUPPORTS*

As Required by the Provisions of the ASME Code Rules, Section III, Division 1

1. Manufactured by Pacific Scientific Co. 1346 S. State College Blvd. Anaheim, CA 92803
(Name and address of NPT Certificate Holder)

2. Manufactured for Power Piping Co. 829 Beaver Ave Pittsburg, PA 15233
(Name and address of purchaser or owner)

3. Location of Installation Unknown

4. Identification

(a) Component Support I.D. No.	(b) Canadian Registration No.	(c) Applicable Drawings with Last Rev. & Date	(d) Stress Report or Load Capacity Data Sheet	(e) Type of Component Support	(f) Class	(g) Nat'l Board No.	(h) Year Built
(1) 10968-	None	1801103-07-H	DR-1352-Rev. B	Linear	1	None	1981
(2) 11067							
(3)							
(4)							
(5)							
(6)							
(7)							
(8)							
(9)							
(10)							

MAR 2 1983

DOCUMENT REVIEWED BY 4993 PNPP QA/QC

5. Remarks

CERTIFICATE OF COMPLIANCE

We certify that the statements made in this report are correct and that these components supports conform to the rules of construction of the ASME Code for Nuclear Power Plant Components, Section III, Division 1, Edition 1974, Addenda Winter '75 (Date)
Code Case No. 1644-6

Date 8/12/81 Signed Pacific Scientific (NPT Certificate Holder) by [signature]

Our ASME Certificate of Authorization No. N-1198 to use the Component Supports (NPT)

Symbol expires 4 August 1981 (Date) & letter of extension to 9/15/81

CERTIFICATION OF DESIGN

Design Information on File at Pacific Scientific Company Kin-Tech Division

Stress Report or Load Capacity Data Sheets on File at Pacific Scientific Company

Design Specifications Certified by (1) Filed per NA-3256 Leo E. Ay PE State California

Reg No. 13533

Stress Analysis Report or Load Capacity Data Sheets Certified by (1) Leo E. Ay

PE State California Reg No 13533

(1) Last name only, signature not required

Power Piping
MAR 2 1981
TPH

*Supplemental sheets in form of lists, sketches or drawings may be used provided (1) size is 8½ in., (2) information in items 1, 2, 4c, 4g on this Data Report is included on each sheet, and (3) each sheet is numbered and number of sheets is recorded at top of this form.

PSA-10

(10/77) This form (E00075) may be obtained from the Order Dept., ASME, 345 E. 47th St., New York, N.Y. 10017

1 9153 000 00497

FORM NF-1 (Back)

CERTIFICATE OF SHOP INSPECTION

I, the undersigned, holding a valid commission issued by the National Board of Boiler and Pressure Vessel Inspectors and the State or Province of California and employed by HSBI & I of Hartford, CT have inspected the component supports described in this Data Report on 8-12, 19 81 and state that to the best of my knowledge and belief the NPT Certificate Holder has constructed these component supports in accordance with the ASME Code for Nuclear Power Plant Components.

By signing this certificate, neither the Inspector nor his employer makes any warranty, expressed or implied, concerning the component supports described in this Data Report. Furthermore, neither the Inspector nor his employer shall be liable in any manner for any personal injury or property damage or a loss of any kind arising from or connected with this inspection.

Date 8-12-81

Signed [signature] Commissions Ca 1445 Penn WC# 2356
(Nat'l Bd., State, Prov., and No.)

CERTIFICATION OF FIELD INSPECTION

I, the undersigned, holding a valid commission issued by the National Board of Boiler and Pressure Vessel Inspectors and the State or Province of _____ and employed by _____ of _____ have compared the statements in this Data Report with the described component supports and state that the parts referred to as data items _____, not included in the certificate of shop inspection, have been inspected by me and that to the best of my knowledge and belief the NPT Certificate Holder has constructed these component supports in accordance with the ASME Code for Nuclear Power Plant Components.

By signing this certificate neither the Inspector nor his employer makes any warranty, expressed or implied, concerning the component supports described in this Data Report. Furthermore, neither the Inspector nor his employer shall be liable in any manner for any personal injury or property damage or a loss of any kind arising from or connected with this inspection.

Date _____

Signed _____ Commissions _____
(Nat'l Bd., State, Prov., and No.)

MAR 2 1983

1E51-128

NIS-2/NR-1 OWNER'S REPORT FOR REPAIRS OR REPLACEMENTS

As required by the Provisions of the ASME Code Section XI

PNPP No. 9308 Rev. 9/11/00 NQI-1741

1. Owner: FIRSTENERGY CORP. Date 05/27/03

10 Center Road, Perry, Ohio 44081 Sheet 1 of 2

2. Plant: Perry Nuclear Power Plant (PNPP) Unit 1

10 Center Road, Perry, Ohio 44081 03-004949-000, R-0

(Repair Org. P.O. No., etc.)

ORDER NO 200010657

3. Work Performed By: FIRSTENERGY Nuclear Operating Company PNPP Type Code Symbol Stamp NR

10 Center Road, Perry, Ohio 44081 Authorization No. 33

Expiration Date 9-26-05

4. Identification of System: 1E51 RX Insolation Cooling System

5. (a) Applicable Construction Code: ASME Sec III, Subsection NB/NF-1 ,1974 Edition

NAME/SECTION/DIVISION/CLASS

Winter 19 75 Addenda Code Case(s)

N272, N413, 1644-5, and 1728

(b) Construction Code used for repairs, modifications, or replacements: 1974 (Edition) W75 (Addenda) N/A (Code Case(s))

(c) ASME Code Section XI applicable for Inservice Inspection: 1989 (Edition) N/A (Addenda) N/A (Code Case(s))

(d) Applicable Edition of Section XI Utilized for Repairs, Modification, or Replacements:

19 89 , N/A 19 N/A Addenda N/A (Code Case(s))

(e) Design Responsibilities FIRSTENERGY Nuclear Operating Company

6. Identification of Components Repaired, Modified, or Replacement Components

Name of Component	Name of Manufacturer	Manufacturer Serial No.	Nat. Board No.	Other ID.	Year Built	Repair, Replacement, or Modification	ASME Code Stamped
Piping System	Pullman Power Products	1E51	N/A	N/A	1985	Replacement	Yes

7. Description of Work: Replaced Snubber Serial Number 14284 on Piping Support 1E51-H0111 with Snubber Serial Number 11054

8. Test Conducted: Hydrostatic- ☐ Pneumatic- ☐ Nominal Operating Pressure- ☐ Other- ☐

Pressure N/A psi Test Temperature N/A degrees F Code Case(s) N/A

NIS-2/NR-1 OWNER'S REPORT FOR REPAIRS OR REPLACEMENTS (Back)

PNPP No. 9308 Rev. 9/11/00 NQI-1741

9. Remarks: _____

NO NAMEPLATE/STAMPING PERFORMED DUE TO THE INTERFACE CONTROLS OF RA-2370 BEING IN EFFECT AND JURISDICTIONAL AUTHORITY CONCURRENCE HAVING BEEN RECEIVED.

Note: Attach all applicable Manufacturer's Data Reports. Supplemental sheets such as lists, sketches, or drawings may be used, provided (1) size is 8 1/2 in. x 11 in., (2) information in items 1 through 6 of this report is included on each sheet, and (3) each sheet is numbered and the number of sheets is recorded on the front of this form.

CERTIFICATE OF COMPLIANCE

I, Lester J. Erbacher, certify that to the best of my knowledge and belief the statements made in this report are correct and the repair, modification or replacement of the items described above conforms to Section XI of the ASME Code and to the National Board Inspection Code "NR" rules.

National Board Certificate of Authorization No. 33 to use the "NR stamp expires 9-26, 20 05

Date May 27, 20 03 Signed FENOC-PNPP (name of repair organization) (authorized representative) QE (title)

CERTIFICATE OF INSPECTION/INSERVICE INSPECTION

I, Thomas G. Laps, holding a valid commission issued by The National Board of Boiler and Pressure Vessel Inspectors and certificate of competency issued by the jurisdiction of OHIO and employed by Hartford Steam Boiler Ct. of Hartford, Conn. have inspected the repair, modification or replacement described in this report on JUNE 9, 20 03 and state that to the best of my knowledge and belief, this repair, modification or replacement has been completed in accordance with Section XI of the ASME Code and the National Board Inspection Code "NR" rules.

By signing this certificate, neither the undersigned nor my employer makes any warranty, expressed or implied, concerning the work described in this report. Furthermore, neither the undersigned nor my employer shall be liable in any manner for any personal injury, property damage or loss of any kind arising from or connected with this inspection.

Date JUNE 9 20 03 Signed Thomas G Laps (inspector) Commissions NB 9330 "N" "I" "A" Ohio Comm. (National Board (include endorsements), and jurisdiction, and no.)

1ES1-128
206 2

FORM NF-1 NPT CERTIFICATE HOLDERS' DATA REPORT FOR COMPONENT SUPPORTS*

As Required by the Provisions of the ASME Code Rules, Section III, Division 1

1. Manufactured by Pacific Scientific Co. 1346 S. State College Blvd. Anaheim, CA 92803
(Name and address of NPT Certificate Holder)

2. Manufactured for Power Piping Co. 829 Beaver Ave Pittsburg, PA 15233
(Name and address of purchaser or owner)

3. Location of Installation Unknown

4. Identification

	(a) Component Support I.D. No.	(b) Canadian Registration No.	(c) Applicable Drawings with Last Rev. & Date	(d) Stress Report or Load Capacity Data Sheet	(e) Type of Component Support	(f) Class	(g) Nat'l Board No.	(h) Year Built
(1)	10968-	None	1801103-07-H	DR-1352-Rev. B	Linear	1	None	1981
(2)	11067							
(3)								
(4)								
(5)								
(6)								
(7)								
(8)								
(9)								
(10)								

MAR 2 1983

DOCUMENT REVIEW
BY 4993
PNPP
DATE

5. Remarks

CERTIFICATE OF COMPLIANCE

We certify that the statements made in this report are correct and that these components supports conform to the rules of construction of the ASME Code for Nuclear Power Plant Components, Section III; Division 1, Edition 1974 Addenda Winter '75 (Date)
Code Case No. 1644-6

Date 8/12/81 Signed Pacific Scientific (NPT Certificate Holder) by [signature]

Our ASME Certificate of Authorization No. N-1198 to use the Component Supports (NPT)

Symbol expires 4 August 1981 (Date) & letter of extension to 9/15/81

CERTIFICATION OF DESIGN

Design Information on File at Pacific Scientific Company Kin-Tech Division

Stress Report or Load Capacity Data Sheets on File at Pacific Scientific Company

Filed per NA-3256

Design Specifications Certified by (1) Leo E. Ay PE State California

Reg No. 13533

Stress Analysis Report or Load Capacity Data Sheets Certified by (1) Leo E. Ay

PE State California Reg No 13533

(1) Last name only, signature not required

POWER PIPING
MAR 3 1981
TPH

*Supplemental sheets in form of lists, sketches or drawings may be used provided (1) size is 8½ in., (2) information in items 1, 2, 4c, 4g on this Data Report is included on each sheet, and (3) each sheet is numbered and number of sheets is recorded at top of this form.

PSA-10

(10/77) This form (E00075) may be obtained from the Order Dept., ASME, 345 E. 47th St., New York, N.Y. 10017

1 9153 000 00491

FORM NF-1 (Back)

CERTIFICATE OF SHOP INSPECTION

I, the undersigned, holding a valid commission issued by the National Board of Boiler and Pressure Vessel Inspectors and the State or Province of California and employed by HSBI & I of Hartford, CT have inspected the component supports described in this Data Report on 8-12, 19 81 and state that to the best of my knowledge and belief the NPT Certificate Holder has constructed these component supports in accordance with the ASME Code for Nuclear Power Plant Components.

By signing this certificate, neither the Inspector nor his employer makes any warranty, expressed or implied, concerning the component supports described in this Data Report. Furthermore, neither the Inspector nor his employer shall be liable in any manner for any personal injury or property damage or a loss of any kind arising from or connected with this inspection.

Date 8-12-81

Signed [signature] Commissions Ca 1445 Penn WC# 2856
(Nat'l Bd., State, Prov., and No.)

CERTIFICATION OF FIELD INSPECTION

I, the undersigned, holding a valid commission issued by the National Board of Boiler and Pressure Vessel Inspectors and the State or Province of _____ and employed by _____ of _____ have compared the statements in this Data Report with the described component supports and state that the parts referred to as data items _____, not included in the certificate of shop inspection, have been inspected by me and that to the best of my knowledge and belief the NPT Certificate Holder has constructed these component supports in accordance with the ASME Code for Nuclear Power Plant Components.

By signing this certificate neither the Inspector nor his employer makes any warranty, expressed or implied, concerning the component supports described in this Data Report. Furthermore, neither the Inspector nor his employer shall be liable in any manner for any personal injury or property damage or a loss of any kind arising from or connected with this inspection.

Date _____

Signed _____ Commissions _____
(Nat'l Bd., State, Prov., and No.)

MAR 2 1983

1E51-129

NIS-2/NR-1 OWNER'S REPORT FOR REPAIRS OR REPLACEMENTS

As required by the Provisions of the ASME Code Section XI

PNPP No. 9308 Rev. 9/11/00 NQI-1741

1. Owner: FIRSTENERGY CORP.
10 Center Road, Perry, Ohio 44081

Date 05/29//03
Sheet 1 of 1

2. Plant: Perry Nuclear Power Plant (PNPP)
10 Center Road, Perry, Ohio 44081

Unit 1
03-004948-000, R-0
(Repair Org. P.O. No., etc.)
AND ORDER NO 200010638

3. Work Performed By: FIRSTENERGY Nuclear Operating Company PNPP
10 Center Road, Perry, Ohio 44081

Type Code Symbol Stamp NR
Authorization No. 33
Expiration Date 9-26-05

4. Identification of System: 1E51 Reactor Core Isolation System

5. (a) Applicable Construction Code: ASME Sec III, Subsection NC/NF-2 ,1974 Edition
NAME/SECTION/DIVISION/CLASS

Winter 19 75 Addenda Code Case(s) N71-6, N71-9, N225, N249, N272, N413, and 1728

(b) Construction Code used for repairs, modifications, or replacements: 1974 (Edition) W75 (Addenda) N/A (Code Case(s))

(c) ASME Code Section XI applicable for Inservice Inspection: 1989 (Edition) N/A (Addenda) N/A (Code Case(s))

(d) Applicable Edition of Section XI Utilized for Repairs, Modification, or Replacements:
19 89 , N/A 19 N/A Addenda N/A (Code Case(s))

(e) Design Responsibilities FIRSTENERGY Nuclear Operating Company

6. Identification of Components Repaired, Modified, or Replacement Components

Name of Component	Name of Manufacturer	Manufacturer Serial No.	Nat. Board No.	Other ID.	Year Built	Repair, Replacement, or Modification	ASME Code Stamped
Piping System	Johnson Controls	1E51-00 68F	015	1H22-P015-H1297	1985	Replacement	Yes

7. Description of Work: Replaced Snubber Serial Number 34341 on piping support 1H22H1915 with New Snubber Serial number 39122

8. Test Conducted: Hydrostatic- ☐ Pneumatic- ☐ Nominal Operating Pressure- ☐ Other- ☐
Pressure N/A psi Test Temperature N/A degrees F Code Case(s) N/A

NIS-2/NR-1 OWNER'S REPORT FOR REPAIRS OR REPLACEMENTS (Back)

PNPP No. 9308 Rev. 9/11/00 NQI-1741

9. Remarks: _____

NO NAMEPLATE/STAMPING PERFORMED DUE TO THE INTERFACE CONTROLS OF RA-2370 BEING IN EFFECT AND JURISDICTIONAL AUTHORITY CONCURRENCE HAVING BEEN RECEIVED.

Note: Attach all applicable Manufacturer's Data Reports. Supplemental sheets such as lists, sketches, or drawings may be used, provided (1) size is 8 1/2 in. x 11 in., (2) information in items 1 through 6 of this report is included on each sheet, and (3) each sheet is numbered and the number of sheets is recorded on the front of this form.

CERTIFICATE OF COMPLIANCE

I, Lester J. Erbacher, certify that to the best of my knowledge and belief the statements made in this report are correct and the repair, modification or replacement of the items described above conforms to Section XI of the ASME Code and to the National Board Inspection Code "NR" rules.

National Board Certificate of Authorization No. 33 to use the "NR stamp expires 9-26, 20 05

Date May 29, 20 03 Signed FENOC-PNPP (name of repair organization) [signature] (authorized representative) QE (title)

CERTIFICATE OF INSPECTION/INSERVICE INSPECTION

I, Thomas G. Laps, holding a valid commission issued by The National Board of Boiler and Pressure Vessel Inspectors and certificate of competency issued by the jurisdiction of OHIO and employed by Hartford Steam Boiler Ct. of Hartford, Conn. have inspected the repair, modification or replacement described in this report on JUNE 6, 20 03 and state that to the best of my knowledge and belief, this repair, modification or replacement has been completed in accordance with Section XI of the ASME Code and the National Board Inspection Code "NR" rules.

By signing this certificate, neither the undersigned nor my employer makes any warranty, expressed or implied, concerning the work described in this report. Furthermore, neither the undersigned nor my employer shall be liable in any manner for any personal injury, property damage or loss of any kind arising from or connected with this inspection.

Date JUNE 6, 20 03 Signed Thomas G Laps (inspector) Commissions NB 9330 "N" "I" "A" Ohio Comm. (National Board (include endorsements), and jurisdiction, and no.)

1E51 - 130

NIS-2/NR-1 OWNER'S REPORT FOR REPAIRS OR REPLACEMENTS

As required by the Provisions of the ASME Code Section XI

PNPP No. 9308 Rev. 9/11/00 NQI-1741

1. Owner: FIRSTENERGY CORP.
10 Center Road, Perry, Ohio 44081
Date 7-1-03
Sheet 1 of 2

2. Plant: Perry Nuclear Power Plant (PNPP)
10 Center Road, Perry, Ohio 44081
Unit one
WO 01-13476-000
(Repair Org. P.O. No., etc.)

3. Work Performed By: FIRSTENERGY Nuclear Operating Company PNPP
10 Center Road, Perry, Ohio 44081
Type Code Symbol Stamp NR
Authorization No. 33
Expiration Date 9/26/2005

4. Identification of System: RX Core Isolation Cooling

5. (a) Applicable Construction Code: ASME Section III NB ,1974 Edition
NAME/SECTION/DIVISION/CLASS

Winter 19 75 Addenda Code Case(s) N/A

(b) Construction Code used for repairs, modifications, or replacements: 1974 Edition Winter 75 Addenda Code Case(s)

(c) ASME Code Section XI applicable for Inservice Inspection: 1989 Edition N/A Addenda Code Case(s)

(d) Applicable Edition of Section XI Utilized for Repairs, Modification, or Replacements:

19 89 , N/A 19 N/A Addenda Code Case(s)

(e) Design Responsibilities FIRSTENERGY Nuclear Oprerating Company PNPP

6. Identification of Components Repaired, Modified, or Replacement Components

Name of Component	Name of Manufacturer	Manufacturer Serial No.	Nat. Board No.	Other ID.	Year Built	Repair, Replacement, or Modification	ASME Code Stamped
Valve	Rockwell International	RA-53	824	1E51F66	1982	Replacement	yes

7. Description of Work: Replaced old disk assembly with new disk assembly S/N 71996-1. Also replaced one stud 1 1/8"-8 HT # F827 and one Heavy Hex nut 1 1/8"-8 HT # F717.

8. Test Conducted: Hydrostatic- ☐ Pneumatic- ☐ Nominal Operating Pressure- ☒ Other- ☐

Pressure 1034 psi Test Temperature 143 degrees F Code Case(s) N/A

NIS-2/NR-1 OWNER'S REPORT FOR REPAIRS OR REPLACEMENTS (Back)

PNPP No. 9308 Rev. 9/11/00 NQI-1741

9. Remarks: VT-2 exam performed during ISI B21-T1300-1

NO NAMEPLATE/STAMPING PERFORMED DUE TO THE INTERFACE CONTROLS OF RA-2370 BEING IN EFFECT AND JURISDICTIONAL AUTHORITY CONCURRENCE HAVING BEEN RECEIVED.

Note: Attach all applicable Manufacturer's Data Reports. Supplemental sheets such as lists, sketches, or drawings may be used, provided (1) size is 8 1/2 in. x 11 in., (2) information in items 1 through 6 of this report is included on each sheet, and (3) each sheet is numbered and the number of sheets is recorded on the front of this form.

CERTIFICATE OF COMPLIANCE

I, Michael J Tepsick, certify that to the best of my knowledge and belief the statements made in this report are correct and the repair, modification or replacement of the items described above conforms to Section XI of the ASME Code and to the National Board Inspection Code "NR" rules.

National Board Certificate of Authorization No. 33 to use the "NR stamp expires 26 Sept., 20 05

Date 1 July, 20 03 Signed FENOC-PNPP (name of repair organization) [signature] (authorized representative) QC (title)

CERTIFICATE OF INSPECTION/INSERVICE INSPECTION

I, Thomas G Laps, holding a valid commission issued by The National Board of Boiler and Pressure Vessel Inspectors and certificate of competency issued by the jurisdiction of OHIO and employed by HSB CT. of Hartford, Conn. have inspected the repair, modification or replacement described in this report on July 28, 20 03 and state that to the best of my knowledge and belief, this repair, modification or replacement has been completed in accordance with Section XI of the ASME Code and the National Board Inspection Code "NR" rules.

By signing this certificate, neither the undersigned nor my employer makes any warranty, expressed or implied, concerning the work described in this report. Furthermore, neither the undersigned nor my employer shall be liable in any manner for any personal injury, property damage or loss of any kind arising from or connected with this inspection.

Date July 28 20 03 Signed Thomas G Laps (inspector) Commissions NB 9330 "N" "I" "A" Ohio Comm. (National Board (include endorsements), and jurisdiction, and no.)

1E51-130 PAGE 2 OF 2

FORM N-2 CERTIFICATE HOLDERS' DATA REPORT FOR IDENTICAL NUCLEAR PARTS AND APPURTENANCES*

As Required by the Provisions of the ASME Code, Section III
Not to Exceed One Day's Production

Pg. 1 of 2

1. Manufactured and certified by EDWARD VOGT VALVE CO. 1900 S. SAUNDERS ST. RALEIGH NC 27603 (Name and address of NPT Certificate Holder)
2. Manufactured for FIRST ENERGY CORP P.O. BOX 3611 AKRON OH 44309 (Name and address of Purchaser)
3. Location of Installation CEI PERRY PLANT 10 CENTER RD NORTH PERRY OH 44081 (Name and address)
4. Type: D82-2440-17N (drawing no.) SA105 (mat'l. spec. no.) N/A (tensile strength) N/A (class) 2002 (year built)
5. ASME Code, Section III, Division 1: 1974 (edition) W'75 (addenda date) 1 (class) N/A (Code Case no.)
6. Fabricated in accordance with Const. Spec. (Div. 2 only) N/A (no.) Revision N/A Date N/A
7. Remarks: Dash for 6" 4594(1VC) 3QTY valve

SQ19403

8. Nom. thickness (in.) N/A Min. design thickness (in.) PER #3 Dia. ID (ft & in.) N/A Length overall (ft & in.) N/A
9. When applicable, Certificate Holders' Data Reports are attached for each item of this report:

Part or Appurtenance Serial Number	National Board No. in Numerical Order	Part or Appurtenance Serial Number	National Board No. in Numerical Order
(1) 7199621	N/A	(126)	
(2) 7199626	N/A	(127)	
(3)		(128)	
(4)		(129)	
(5)		(130)	
(6)		(131)	
(7)		(132)	
(8)		(133)	
(9)		(134)	
(10)		(135)	
(11)		(136)	
(12)		(137)	
(13)		(138)	
(14)		(139)	
(15)		(140)	
(16)		(141)	
(17)		(142)	
(18)		(143)	
(19)		(144)	
(20)		(145)	
(21)		(146)	
(22)		(147)	
(23)		(148)	
(24)		(149)	
(25)		(150)	

10. Design pressure 1440 psi. Temp. 594 °F. Hydro. test pressure N/A (when applicable) at temp. °F

*Supplemental information in the form of lists, sketches, or drawings may be used provided (1) size is 8½ x 11 (2) information in items 2 and 9 on this Data Report is included on each sheet; (3) each sheet is numbered and the number of sheets is recorded at the top of this form.

(12/88) This form (E00040) may be obtained from the Order Dept., ASME, 22 Law Drive, Box 2300, Fairfield, NJ 07007-2300.

Reprint (7/91)

FORM N-2 (Back) Pg 2 of 2

Certificate Holder's Serial Nos. 71996-1 through 71996-2

CERTIFICATION OF DESIGN

Design specifications certified by Francis C. Rosch Jr. (when applicable) P.E. State PA Reg. no. 002855-E

Design report certified by _____ (when applicable) P.E. State _____ Reg. no. _____

CERTIFICATE OF COMPLIANCE

We certify that the statements made in this report are correct and that this (these) PARTS conforms to the rules of construction of the ASME Code, Section III, Division 1.

N.P.T. Certificate of Authorization No. N-1563 Expires 11/26/03

Date 3/27/02 Name EDWARD VOGT VALVE CO. (N.P.T. Certificate Holder) Signed [signature] (Authorized representative)

CERTIFICATE OF INSPECTION

I, the undersigned, holding a valid commission issued by the National Board of Boiler and Pressure Vessel Inspectors and the State or Province of NORTH CAROLINA and employed by HSB CT of HARTFORD, CT have inspected these items described in this Data Report on 3-27-02 and state that, to the best of my knowledge and belief, the Certificate Holder has fabricated these parts or appurtenances in accordance with the ASME Code, Section III, Division 1. Each part listed has been authorized for stamping on the date shown above.

By signing this certificate neither the inspector nor his employer makes any warranty, expressed or implied, concerning the equipment described in this Data Report. Furthermore, neither the inspector nor his employer shall be liable in any manner for any personal injury or property damage or loss of any kind arising from or connected with this inspection.

Date 3-27-02 Signed [signature] (Authorized Inspector) Commissions NC 1421 (Nat'l Bd. and endorsements) and state or prov. and no.

1E51-131

NIS-2/NR-1 OWNER'S REPORT FOR REPAIRS OR REPLACEMENTS

As required by the Provisions of the ASME Code Section XI

PNPP No. 9308 Rev. 9/11/00 NQI-1741

1. Owner: FIRSTENERGY CORP.
10 Center Road, Perry, Ohio 44081

Date 7/25/03
Sheet 1 of 1

2. Plant: Perry Nuclear Power Plant (PNPP)
10 Center Road, Perry, Ohio 44081

Unit ONE
W.O. 01-15820 R/0
(Repair Org. P.O. No., etc.)

3. Work Performed By: FIRSTENERGY Nuclear Operating Company PNPP
10 Center Road, Perry, Ohio 44081

Type Code Symbol Stamp NR
Authorization No. 33
Expiration Date 9/26/2005

4. Identification of System: 1E51 RX CORE ISOLATION COOLING

5. (a) Applicable Construction Code: ASME Section III NB ,1974 Edition
NAME/SECTION/DIVISION/CLASS

Winter 19 75 Addenda Code Case(s) N-242,N-272,1728,N-413,1644-5,N-241,N-275

(b) Construction Code used for repairs, modifications, or replacements: 1974 (Edition) Winter 75 (Addenda) N/A (Code Case(s))

(c) ASME Code Section XI applicable for Inservice Inspection: 1989 (Edition) N/A (Addenda) N/A (Code Case(s))

(d) Applicable Edition of Section XI Utilized for Repairs, Modification, or Replacements:
19 89 , N/A 19 N/A Addenda N/A (Code Case(s))

(e) Design Responsibilities FIRSTENERGY Nuclear Operating Company PNPP

6. Identification of Components Repaired, Modified, or Replacement Components

Name of Component	Name of Manufacturer	Manufacturer Serial No.	Nat. Board No.	Other ID.	Year Built	Repair, Replacement, or Modification	ASME Code Stamped
PIPING SYSTEM	PULLMAN POWER	1E51	84	N/A	1985	REPLACEMENT	YES

7. Description of Work: DURING REASSEMBLY OF RX VESSEL 1B13D0003. (8) STUDS 1-1/8-8 X 7"LG. HT#TMP WERE REPLACED IN THE VENT TO HEADSPRAY TEE.

8. Test Conducted: Hydrostatic- ☐ Pneumatic- ☐ Nominal Operating Pressure- ☒ Other- ☐
Pressure 1034 psi Test Temperature 143 degrees F Code Case(s) N/A

NIS-2/NR-1 OWNER'S REPORT FOR REPAIRS OR REPLACEMENTS (Back)

PNPP No. 9308 Rev. 9/11/00 NQI-1741

9. Remarks:

NO NAMEPLATE/STAMPING PERFORMED DUE TO THE INTERFACE CONTROLS OF RA-2370 BEING IN EFFECT AND JURISDICTIONAL AUTHORITY CONCURRENCE HAVING BEEN RECEIVED.

Note: Attach all applicable Manufacturer's Data Reports. Supplemental sheets such as lists, sketches, or drawings may be used, provided (1) size is 8 1/2 in. x 11 in., (2) information in items 1 through 6 of this report is included on each sheet, and (3) each sheet is numbered and the number of sheets is recorded on the front of this form.

CERTIFICATE OF COMPLIANCE

I, DAVID K. ASKEW, certify that to the best of my knowledge and belief the statements made in this report are correct and the repair, modification or replacement of the items described above conforms to Section XI of the ASME Code and to the National Board Inspection Code "NR" rules.

National Board Certificate of Authorization No. 33 to use the "NR stamp expires 26 Sept. 20 05

Date 7/25, 20 03 Signed FENOC-PNPP (name of repair organization) David K. Askew (authorized representative) QE (title)

CERTIFICATE OF INSPECTION/INSERVICE INSPECTION

I, Thomas G. Laps, holding a valid commission issued by The National Board of Boiler and Pressure Vessel Inspectors and certificate of competency issued by the jurisdiction of OHIO and employed by ~~THOMAS G. LAPS~~ H.S.B. CT. of HARTFORD, CONN have inspected the repair, modification or replacement described in this report on AUG. 4, 20 03 and state that to the best of my knowledge and belief, this repair, modification or replacement has been completed in accordance with Section XI of the ASME Code and the National Board Inspection Code "NR" rules.

TGL 8/4/03

By signing this certificate, neither the undersigned nor my employer makes any warranty, expressed or implied, concerning the work described in this report. Furthermore, neither the undersigned nor my employer shall be liable in any manner for any personal injury, property damage or loss of any kind arising from or connected with this inspection.

Date AUG 4, 20 03 Signed Thomas G. Laps (inspector) Commissions NB 9330 "N" "I" "A" Ohio Comm. (National Board (include endorsements), and jurisdiction, and no.)

1H22-004

NIS-2/NR-1 OWNER'S REPORT FOR REPAIRS OR REPLACEMENTS

As required by the Provisions of the ASME Code Section XI

PNPP No. 9308 Rev. 9/11/00 NQI-1741

1. Owner: FIRSTENERGY CORP.
10 Center Road, Perry, Ohio 44081

Date 05/27/03
Sheet 1 of 1

2. Plant: Perry Nuclear Power Plant (PNPP)
10 Center Road, Perry, Ohio 44081

Unit 1
03-004947-000, R-0
(Repair Org. P.O. No., etc.)
ORDER No 200010619

3. Work Performed By: FIRSTENERGY Nuclear Operating Company PNPP
10 Center Road, Perry, Ohio 44081

Type Code Symbol Stamp NR
Authorization No. 33
Expiration Date 9-26-05

4. Identification of System: 1H22 Local Panels and Racks

5. (a) Applicable Construction Code: ASME Section III, Subsection NC/NF-2 ,1974 Edition
NAME/SECTION/DIVISION/CLASS

Winter 19 75 Addenda Code Case(s) N224-1, N225, N249, N27, N3, N413, N71-6, N71-9, N71-11 AND 1728

(b) Construction Code used for repairs, modifications, or replacements: 1974 (Edition) W75 (Addenda) N/A (Code Case(s))

(c) ASME Code Section XI applicable for Inservice Inspection: 1989 (Edition) N/A (Addenda) N/A (Code Case(s))

(d) Applicable Edition of Section XI Utilized for Repairs, Modification, or Replacements:

19 89 , N/A 19 N/A Addenda N/A (Code Case(s))

(e) Design Responsibilities FIRSTENERGY Nuclear Operating Company

6. Identification of Components Repaired, Modified, or Replacement Components

Name of Component	Name of Manufacturer	Manufacturer Serial No.	Nat. Board No.	Other ID.	Year Built	Repair, Replacement, or Modification	ASME Code Stamped
Piping System	Johnson Controls	1B21-0070F	001	N/A	1985	Replacement	Yes

7. Description of Work: Replaced original PSA-1/4 Snubber Serial Number 34336 with Snubber Serial Number 39118 on pipe support 1H22-H0389 (1H22-P004-H1230).

8. Test Conducted: Hydrostatic- ☐ Pneumatic- ☐ Nominal Operating Pressure- ☐ Other- ☐

Pressure N/A psi Test Temperature N/A degrees F Code Case(s) N/A

NIS-2/NR-1 OWNER'S REPORT FOR REPAIRS OR REPLACEMENTS (Back)

PNPP No. 9308 Rev. 9/11/00 NQI-1741

9. Remarks:

NO NAMEPLATE/STAMPING PERFORMED DUE TO THE INTERFACE CONTROLS OF RA-2370 BEING IN EFFECT AND JURISDICTIONAL AUTHORITY CONCURRENCE HAVING BEEN RECEIVED.

Note: Attach all applicable Manufacturer's Data Reports. Supplemental sheets such as lists, sketches, or drawings may be used, provided (1) size is 8 1/2 in. x 11 in., (2) information in items 1 through 6 of this report is included on each sheet, and (3) each sheet is numbered and the number of sheets is recorded on the front of this form.

CERTIFICATE OF COMPLIANCE

I, Lester J. Erbacher, certify that to the best of my knowledge and belief the statements made in this report are correct and the repair, modification or replacement of the items described above conforms to Section XI of the ASME Code and to the National Board Inspection Code "NR" rules.

National Board Certificate of Authorization No. 33 to use the "NR stamp expires 9-26, 20 05

Date May27, 20 03 Signed FENOC-PNPP (name of repair organization) (authorized representative) QE (title)

CERTIFICATE OF INSPECTION/INSERVICE INSPECTION

I, Thomas G. Laps, holding a valid commission issued by The National Board of Boiler and Pressure Vessel Inspectors and certificate of competency issued by the jurisdiction of OHIO and employed by Hartford Steam Boiler Ct. of Hartford, Conn. have inspected the repair, modification or replacement described in this report on JUNE 6, 2003 and state that to the best of my knowledge and belief, this repair, modification or replacement has been completed in accordance with Section XI of the ASME Code and the National Board Inspection Code "NR" rules.

By signing this certificate, neither the undersigned nor my employer makes any warranty, expressed or implied, concerning the work described in this report. Furthermore, neither the undersigned nor my employer shall be liable in any manner for any personal injury, property damage or loss of any kind arising from or connected with this inspection.

Date JUNE 6, 20 03 Signed Thomas G Laps (inspector) Commissions NB 9330 "N" "I" "A" Ohio Comm. (National Board (include endorsements), and jurisdiction, and no.)

1M51-026

NIS-2/NR-1 OWNER'S REPORT FOR REPAIRS OR REPLACEMENTS

As required by the Provisions of the ASME Code Section XI

PNPP No. 9308 Rev. 9/11/00 NQI-1741

1. Owner: FIRSTENERGY CORP.
10 Center Road, Perry, Ohio 44081
Date 05/12/03
Sheet 1 of 1

2. Plant: Perry Nuclear Power Plant (PNPP)
10 Center Road, Perry, Ohio 44081
Unit 1
01-015526-000, R-0
(Repair Org. P.O. No., etc.)

3. Work Performed By: FIRSTENERGY Nuclear Operating Company PNPP
10 Center Road, Perry, Ohio 44081
Type Code Symbol Stamp NR
Authorization No. 33
Expiration Date 9-26-05

4. Identification of System: 1M51 CombustibleGas Control System

5. (a) Applicable Construction Code: ASME Sec III, Subsection NC-Class 2 ,1974 Edition
NAME/SECTION/DIVISION/CLASS

Winter 19 75 Addenda Code Case(s) N-272 and 1644-5

(b) Construction Code used for repairs, modifications, or replacements: 1974 (Edition) W75 (Addenda) N/A (Code Case(s))

(c) ASME Code Section XI applicable for Inservice Inspection: 1989 (Edition) N/A (Addenda) N/A (Code Case(s))

(d) Applicable Edition of Section XI Utilized for Repairs, Modification, or Replacements:

19 89 , N/A 19 N/A Addenda N/A (Code Case(s))

(e) Design Responsibilities FIRSTENERGY Nuclear Operating Company

6. Identification of Components Repaired, Modified, or Replacement Components

Name of Component	Name of Manufacturer	Manufacturer Serial No.	Nat. Board No.	Other ID.	Year Built	Repair, Replacement, or Modification	ASME Code Stamped
Piping System	Pullman Power Products	1M51	N/A	1M51-H1024	1985	Replacement	Yes

7. Description of Work: Replace Original Snubber Serial Number 29979 with new Snubber Serial number 39121.

8. Test Conducted: Hydrostatic- ☐ Pneumatic- ☐ Nominal Operating Pressure- ☐ Other- ☐

Pressure N/A psi Test Temperature N/A degrees F Code Case(s) N/A

NIS-2/NR-1 OWNER'S REPORT FOR REPAIRS OR REPLACEMENTS (Back)

PNPP No. 9308 Rev. 9/11/00 NQI-1741

9. Remarks: _____

NO NAMEPLATE/STAMPING PERFORMED DUE TO THE INTERFACE CONTROLS OF RA-2370 BEING IN EFFECT AND JURISDICTIONAL AUTHORITY CONCURRENCE HAVING BEEN RECEIVED.

Note: Attach all applicable Manufacturer's Data Reports. Supplemental sheets such as lists, sketches, or drawings may be used, provided (1) size is 8 1/2 in. x 11 in., (2) information in items 1 through 6 of this report is included on each sheet, and (3) each sheet is numbered and the number of sheets is recorded on the front of this form.

CERTIFICATE OF COMPLIANCE

I, Lester J. Erbacher, certify that to the best of my knowledge and belief the statements made in this report are correct and the repair, modification or replacement of the items described above conforms to Section XI of the ASME Code and to the National Board Inspection Code "NR" rules.

National Board Certificate of Authorization No. 33 to use the "NR stamp expires 9-26, 20 05

Date May 5, 20 03 Signed FENOC-PNPP (name of repair organization) (authorized representative) QE (title)

CERTIFICATE OF INSPECTION/INSERVICE INSPECTION

I, Thomas G. Laps, holding a valid commission issued by The National Board of Boiler and Pressure Vessel Inspectors and certificate of competency issued by the jurisdiction of OHIO and employed by Hartford Steam Boiler Ct. of Hartford, Conn. have inspected the repair, modification or replacement described in this report on May 5, 20 03 and state that to the best of my knowledge and belief, this repair, modification or replacement has been completed in accordance with Section XI of the ASME Code and the National Board Inspection Code "NR" rules.

By signing this certificate, neither the undersigned nor my employer makes any warranty, expressed or implied, concerning the work described in this report. Furthermore, neither the undersigned nor my employer shall be liable in any manner for any personal injury, property damage or loss of any kind arising from or connected with this inspection.

Date May ~~5~~ 19, 20 03 Signed Thomas G. Laps (inspector) Commissions NB 9330 "N" "I" "A" Ohio Comm. (National Board (include endorsements), and jurisdiction, and no.)

TGL 5/19/03