AmerGen
An Exelon/British Energy Company

AmerGen Energy Company, LLC
Oyster Creek
US Route 9 South
P.O. Box 388
Forked River, NJ 08731-0388

10 CFR 50.90

October 12, 2001
2130-01-20211

U.S. Nuclear Regulatory Commission
Attn: Document Control Desk
Washington, DC 20555

Subject: Oyster Creek Generating Station
Docket No. 50-219
Facility Operating License No. DPR-16
Technical Specification Change Request No. 281
Response to Request for Additional Information

References: 1) AmerGen Letter No. 2130-01-20042 dated April 4, 2001, "Technical Specification Change Request No. 281"

2) NRC Letter dated August 24, 2001, "Oyster Creek Nuclear Generating Station – Request for Additional Information on Technical Specification Change Request No. 281 – Heavy Loads Over Irradiated Fuel (TAC No. MB1747)"

In Reference 1 AmerGen Energy Company, LLC (AmerGen) requested a change to the Technical Specifications contained in Appendix A to the Facility Operating License regarding restrictions on handling heavy loads over irradiated fuel in the spent fuel storage pool at Oyster Creek. Reference 2 contains a request for additional information to AmerGen from the NRC staff. Enclosure 1 of this letter provides responses to the questions contained in Reference 2. Enclosure 2 addresses the activities and complications involved in using the cask drop protection system installed in the spent fuel storage pool at Oyster Creek. This supplements information discussed at a meeting between AmerGen and the NRC staff on September 26, 2001. Enclosure 3 contains a failure mode and effects analysis of the upgraded reactor building crane. Enclosure 4 contains marked-up Technical Specification bases page 5.3-2 that was not included in Reference 1, reflecting the change to the Technical Specifications proposed in Reference 1.

American Crane and Equipment Company, the Oyster Creek reactor building crane upgrade designer, fabricator and installer, has granted AmerGen and consequently the NRC permission to release copies of the drawings in the enclosures.

New commitments contained in this correspondence are identified and summarized in Enclosure 5.

A001

Should you have questions or require additional information please contact Mr. Paul F. Czaya at 609-971-4139.

I declare under penalty of perjury that the foregoing is true and correct.

Very truly yours,

10-12-01
Executed On

Ron J. DeGregorio
Vice President
Oyster Creek

Enclosures:
1) Response to Request for Additional Information
2) Discussion of Complications Using the Cask Drop Protection System
3) Reactor Building Crane Failure Modes and Effects Analysis
4) Technical Specification Bases Page 5.3-2 Mark-up
5) List of New Commitments

c: H. J. Miller, Administrator, USNRC Region I
L. A. Dudes, USNRC Senior Resident Inspector, Oyster Creek
H. N. Pastis, USNRC Senior Project Manager, Oyster Creek
File No. 01037

Enclosure 1

Oyster Creek Generating Station

Technical Specification Change Request No. 281

Response to Request for Additional Information

NRC Question 1

The Licensee, in its April 4, 2001, proposal to delete TS 5.3.1.B and 5.3.1.C, along with upgrading its crane to include single-failure-proof features, indicated that:

- Section III, 1.0 Effects on Safety: "The proposed Technical Specification change will eliminate restrictions on movement of heavy loads, i.e. loads greater than the weight of a spent fuel assembly and its handling too, over spent fuel in the spent fuel storage pool (SFSP). It also removes requirements relating to the design function of the CDPS for cask moves into the SFSP. To effect this, the reactor building crane has been upgraded to single-failure-proof as defined by NUREG-0612."

- Section II, Background and Reason for Change: "With the upgrade of the reactor building crane and when used with single-failure-proof lifting devices, the drop of heavy loads by the reactor building crane is no longer required to be considered, as outlined in NUREG-0612 described above, during all plant modes."

- "The proposed change is the deletion of Specifications 5.3.1.B and 5.3.1.C. As a result, heavy loads will be able to be moved over stored irradiated fuel assemblies in the spent fuel storage pool by the reactor building crane using single-failure-proof rigging and the CDPS will no longer be required to protect the spent fuel storage pool from a cask drop."

- Page E1-11, Paragraph 1.3.1, Description of Change: "The proposed change to the Technical Specifications is shown in Enclosure 3. Then change removes all requirements for limiting heavy loads over the SFSP and reliance on the design function of the cask drop protection system."

- Page E1-13, Justification for Technical Specification Change: "The restrictions imposed by Technical Specifications 5.3.1.B and 5.3.1.C are unnecessary when the single-failure-proof reactor building crane is used to transport a heavy load over the spent fuel storage pool."

In a safety evaluation dated June 21, 1983, the NRC staff accepted the OCNGS Phase 1 implementation of NUREG-0612 using a non-single-failure-proof crane. However, installation of a crane with single-failure-proof features does not provide for unrestricted movement over or in proximity to irradiated fuel, safe shutdown equipment or equipment important to safe shutdown. The installation of a crane with the above features only further reduces the probability of a load drop as indicated by NUREG-0612, Section 5.2, Bases for Guidelines, Subsection, Area Specific Guidelines.

Demonstrate that your heavy load handling operations will satisfy the defense-in-depth approach of NUREG-0612 as stated in NUREG-0612, Section 5.1.1, General, Items 5.1.1(1) Safe Loads Paths, 5.1.1(2) Load Handling Procedures, 5.1.1(3) Crane Operator Training, 5.1.1(4) Specially Lifting Devices, 5.1.1(5) Lifting Devices (Not Specially Designed), 5.1.1(6) Cranes (Inspection, Testing, and Maintenance), and 5.1.1(7) Crane Design, for the upgraded crane with single-failure-proof features.

AmerGen Response to Question 1

The Oyster Creek licensing basis for the reactor building crane requires compliance with NRC NUREG-0612 Phase I and Phase II. To ensure that Phase II is met the crane was upgraded to meet the criteria contained in NUREG-0612, Section 5.1.6 in accordance with 10 CFR 50.59. Phase I requirements consist of establishing load handling procedures and safe load paths, crane considerations (design, inspection, testing and maintenance), lifting device controls (design inspection and testing) and crane operator training. Commitments to these requirements are contained in letters dated September 22, 1981 and February 18, 1983 and were accepted by the NRC in a letter dated June 21, 1983. Specific requirements are incorporated in Oyster Creek procedures applicable to the reactor building crane (RBC) and heavy load handling operations. The heavy load handling operations at Oyster Creek will continue to satisfy the defense-in-depth approach of NUREG-0612 as stated in NUREG-0612, Section 5.1.1, "General." The following demonstrates how the use of the RBC will meet the requirements of the General Guidelines.

5.1.1 (1) Safe Load Paths

Transport of heavy loads at Oyster Creek is controlled by the Oyster Creek Load Lift Management (LLM) procedure. This procedure requires that the RBC operating procedure control all lifts made with the RBC. Special load lifts not identified by the RBC operating procedure are evaluated and controlled by the LLM procedure. The LLM procedure ensures that lifting and rigging activities do not compromise safe shutdown capability. Structural and load drop consequence analyses are prepared for lifts involving heavy loads or critical loads not considered in current plant procedures. All loads are routed along safe load paths that, to the greatest extent possible, avoid irradiated fuel and safe shutdown equipment. The load path will follow, to the extent practical, structural framing members such as beams and columns.

The RBC operating procedure covers operation of the RBC and provides special precautions and information for handling heavy loads and for following appropriate load paths. This procedure provides the safe load path for all heavy loads moved by the RBC. This procedure has the following requirements:

(a) Maintain load to minimum height practical to clear obstructions. Hand rails, miscellaneous tools and equipment shall be moved from the travel path to minimize lift height above the floor, and

(b) Special procedures and authorization from the Plant Engineering Director is required to allow movement of heavy loads over the reactor cavity when the shield blocks are removed and over the spent fuel pool (SFP). All loads must follow safe load paths.

For loads that are not covered by the RBC operating procedure, the LLM procedure will be used to resolve conflict or provide direction.

Heavy load paths other than those already authorized will not be allowed over the reactor when the shield blocks are removed and over the SFP unless it is absolutely necessary to do so. Procedures will be revised to require authorization from the Plant Manager or designee and the Engineering Director or designee for heavy load paths other than those previously authorized over the reactor cavity with the shield blocks removed, or over the spent fuel storage pool.

Use of the Oyster Creek RBC for moving heavy loads is in compliance with this section of NUREG-0612.

5.1.1 (2) Load Handling Procedures

The RBC operating procedure establishes requirements for handling loads listed in Table 3.1-1 of NUREG-0612 for BWR Plants. An exhibit of the procedure identifies the required lifting equipment, the safety class for the loads, the weight to be lifted and the procedure that governs the lifting. The procedure that governs the lifting contains the safe load paths. A section of the procedure contains inspection requirements for the crane and rigging. At each shift change and prior to operation, the crane operator is required to perform the crane inspection for all items listed on an exhibit of the procedure. Prior to the lift, the job supervisor is required to inspect slings and lifting devices to be used in accordance with the Inspection of Refueling Lifting Fixtures and Rigging Equipment procedure, and the Control and Use of Lifting/Rigging Equipment procedure. Special precautions are contained in each procedure. For lifting of heavy loads over the reactor when the shield plugs are removed and over the spent fuel pool, special procedures will be used. These special procedures will ensure compliance with Section 5.1.1 of NUREG-0612.

Use of the Oyster Creek RBC for moving heavy loads is in compliance with this section of NUREG-0612.

5.1.1 (3) Crane Operator Training

The RBC operators are qualified in accordance with the Crane Operator Qualification procedure. This procedure satisfies the requirements of ANSI B30.2-1976, "Overhead Gantry Cranes." There is only one procedural exception to the ANSI document and it involves lifting of the steam separator assembly. This exception was approved by the NRC safety evaluation dated June 21, 1983. The procedure provides qualification criteria to ensure that crane operators are completely familiar with all the equipment they will be called upon to operate, they fully understand the hazard potential of their duties and safety responsibility, and thoroughly understand the operating procedure that will be utilized to assure safe load handling.

Use of the Oyster Creek RBC for moving heavy loads is in compliance with this section of NUREG-0612.

5.1.1 (4) Special Lifting Devices

All lifting devices except the reactor head strong back satisfy the requirement of NUREG-0612, Section 5.1.6 and ANSI N14.6-1978, which exceeds the requirements of Section 5.1.1 (4) of NUREG-0612. The reactor head strong back was reviewed and approved in the NRC safety evaluation dated June 21, 1983 for lifting the reactor head with the non-single-failure-proof crane. All new special lifting devices, such as those for lifting casks are designed and tested to the requirements of NUREG-0612, Section 5.1.6 and ANSI-N14.6-1978. Interfacing lift points are required to satisfy the criteria in NUREG-0612, Section 5.1.6(3).

Use of the Oyster Creek RBC for moving heavy loads is in compliance with this section of NUREG-0612.

5.1.1 (5) Lifting Devices That Are Not Specifically Designed

The RBC operating procedure requires that slings be designed to have double capacity (safety factor of 10:1) for the loads to be lifted as determined by the tables in ASME B30.9, "Slings." The Control and Use of Lifting/Rigging Equipment procedure, contains the requirements for control, testing and inspection of all lifting/rigging equipment including slings. This procedure ensures that the correct lifting/rigging devices are used for each lift.

Use of the Oyster Creek RBC for moving heavy loads is in compliance with and exceeds the requirements of this section of NUREG-0612.

5.1.1 (6) Crane Inspection, Test and Maintenance

The reactor building crane is inspected prior to each use and each shift thereafter in accordance with an exhibit of the RBC operating procedure. Preventive maintenance inspection and testing of the crane is performed monthly and yearly. The inspection criteria are in the AmerGen preventive maintenance program. RBC inspection, test and maintenance are in accordance with Chapter 2-1 of ANSI B30.2-1976.

Use of the Oyster Creek RBC for moving heavy loads is in compliance with this section of NUREG-0612.

5.1.1 (7) Crane Design

The reactor building crane (as configured in 1981 before subsequent modification) was reviewed by the NRC in a SER dated June 21, 1983 as meeting the requirements of NUREG-0612, Section 5.1.1 (7) and thus meets the intent of the 1975 edition of CMAA Specification #70. The modified crane was designed to satisfy the requirements of NUREG-0554 as well as NUREG-0612, Appendix C. As NUREG-0554 incorporates by reference CMAA Specification #70 (1975), the most current 1999 version was used in the design of the upgraded crane. The 1975 edition of CMAA Specification #70 was reviewed to ensure the requirements of the 1999 edition envelop the requirements in the 1975 edition. The design requirements for the upgraded crane exceed the requirements stated in this section of NUREG-0612.

Use of the Oyster Creek RBC for moving heavy loads is in compliance with this section of NUREG-0612.

NRC Question 2

In Subsection 1.3, Technical Specification Change, Paragraph 1.3.2, Justification for Technical Specification Change, the licensee proposed to delete TSs 5.3.1.B and 5.3.1.C and their associated Bases and to relocate TS Section 5.3 Bases from page 5.3-1 to 5.3-2. The licensee stated that the justification for this change is supported by the Improved Standard Technical Specifications, NUREGs-1433 and 1434, Revision 1, dated April 7, 1995. Please address the following:

(a) Because the defense-in-depth methods as provided in NUREG-0612 require that heavy loads are controlled with the intent to prevent and mitigate the consequences of postulated accidental load drops, describe how you plan to maintain the restrictions of the technical specifications when they are located either in the UFSAR or other licensee controlled documents and procedures, and

(b) State how you will control the above commitment.

AmerGen Response to Question 2

Oyster Creek addresses the defense-in-depth approach required by NUREG-0612, in part, by continuing adherence to the Phase I guidelines as discussed in response to Question 1. These guidelines are implemented through plant procedures. In addition, the implementation and control of Phase II improvements is also by means of plant procedures. The continuation of compliance with Phase I guidelines, as well as the upgrades to the reactor building crane and its related handling system requirements is included in the Updated FSAR.

Technical Specification Change Request (TSCR) No. 281 proposes to delete Technical Specifications (TS) 5.3.1.B and 5.3.1.C from Appendix A to Facility Operating License DPR-16. TSCR No. 281 does not propose to relocate these requirements to licensee-controlled documents as would be permitted by adopting the Standard Technical Specifications (STS). The discussion of consistency with the STS in Section 1.3.2 of TSCR No. 281 was intended to show that even if Technical Specification requirements regarding heavy load restrictions were to remain effective, then they could be relocated to licensee-controlled documents. Since TS 5.3.1.B and 5.3.1.C will not be relocated there is no need to describe how they will be controlled.

NRC Question 3

Page E1-5, Subsection, 1.2 Single-Failure-Proof Reactor Building Crane, indicates that the crane was upgraded to single-failure-proof. How was the crane upgraded (i.e., what of the existing crane remains and what is new)?

AmerGen Response to Question 3

AmerGen, using the services of American Crane and Equipment Company (ACECO), has installed a new 105/10-ton maximum critical load (MCL) single-failure-proof main and auxiliary hoist trolley at Oyster Creek. The new trolley replaces the original 100/5-ton reactor building crane trolley. The original crane was fabricated by the Whiting Corporation in 1966-1967 in accordance with EOCI Specification No. 61 and Burns and Roe Specification S-2292-32, and then later evaluated to conformance with CMAA Specification #70 (1975) as part of NUREG-0612 Phase I.

In 1995 the existing reactor building crane control systems were upgraded to include AC flux vector controls on the hoist units and AC variable frequency controls on the bridge and trolley.

The upgraded controls, which included new motors and brakes, increased crane performance capabilities and provided numerous enhancements in crane control safety systems.

The use of the new single-failure-proof trolley, designed so that a single failure will not result in the loss of the capability to safely retain the load, will allow movement of heavy loads in compliance with the requirements of NUREG-0612 Phase II as described in Sections 5.1.4 and 5.1.5.

The design basis for the new single-failure-proof trolley is NUREG-0554 and NUREG-0612, Appendix C. As NUREG-0554 incorporates by reference CMAA Specification #70, the most current version (1999) was used. The 1975 edition of CMAA Specification #70 was reviewed to ensure the requirements of this edition are enveloped by the 1999 edition. In areas where NUREG-0554 provides only a requirement, ASME NOG-1-1998 was used to define the design criteria. As an example, NUREG-0554 requires a device to absorb the energy resulting from a broken rope event as a requirement. ASME NOG-1 defined the criteria to use to address this event.

The existing bridge was retained and a new replacement trolley was installed. Electrical components from the 1995 upgrade were retained and modified for NUREG-0554 compliance. The matrix on the following page identifies which components are original or replaced.

COMPONENT	ORIGINAL	REPLACED IN 1995	REPLACED IN 2000
Bridge (Girders)	X		
Runway Endstops	X		
Bridge Bumpers		X	
Trolley Endstops			X
Bridge End trucks	X		
Bridge Wheels	X		
Bridge Drive Train	X		
Bridge Motor		X	
Bridge Brake		X	
Cab	X	(Upgraded)	(Upgraded)
Bridge Service Platform	X		
Trolley			X
Main Hoist			X
Auxiliary Hoist			X
Trolley Drive			X
Trolley Motor			X
Trolley Brake			X
Main Hoist Wire rope			X
Auxiliary Hoist Wire rope			X
Main Hoist Hook block			X
Auxiliary Hoist Hook block			X
Electrical Controls		X	
Bridge Frequency Drive		X	
Trolley Frequency Drive		X	
Main Hoist Flux Vector Frequency Drive		X	
Auxiliary Hoist Flux Vector Frequency Drive		X	X
Radio Control		X	(Upgraded)
Weigh Scale System		X	(Upgraded)
Bridge Limit Switches		X	
Trolley Limit Switches			X
Main Hoist Limit Switches			X
Auxiliary Hoist Limit Switches			X

NRC Question 4

The Licensee in its proposal within its no significant hazards determination stated the following:

Since the NRC fault tree evaluation shows that the potential for unacceptable consequences is comparable for the two alternatives in Section 5.1.4 of NUREG-0612, the proposed technical specification change does not significantly change the potential for unacceptable consequences to the plant in conducting heavy load handling above the SFSP. The probability of a load drop accident caused by the use of the reactor building crane has been reduced to where it is so small (as) to be considered not credible within regulatory accepted standards.

NUREG-0612 fault tree analysis for single-failure-proof cranes and lifting devices, where reliance is placed on increased handling system reliability, is established using safe load paths, trained operators, adequately designed cranes and devices, etc. How does OCNGS heavy load handling operations meet with the explicit requirements in the fault tree analysis used by the staff in NUREG-0612 as stated above?

AmerGen Response to Question 4

The Oyster Creek heavy load handling operation is in full compliance with NUREG-0612, Section 5.1.1. This compliance is addressed in the response to NRC Question 1.

AmerGen has reviewed inputs to the NRC fault tree analysis contained in Appendix B in NUREG-0612 pertaining to crane handling systems and compared the input requirements to the Oyster Creek single-failure-proof RBC and its handling system. From the fault tree, the branches reviewed are 3.1A, 3.1B, and 3.2.3 as shown on sheets 5-14 and 5-15 of NUREG-0612. The following table lists the NUREG-0612 input requirements for each box on the fault tree and the Oyster Creek RBC handling system component that pertains to the input.

ITEM #	INPUT CRITERIA	OC RBC SYSTEM	IS INPUT REQUIREMENT SATISFIED?
3.1.1(A)	Load drops considered are those over the reactor core from Table 3.1-1 of NUREG-0612.	Heavy load moves over the core are the same as in Table 3.1-1 of NUREG-0612. This is detailed in Exhibit 1 of the RBC operating procedure except Oyster Creek (OC) no longer uses a vessel service platform.	Yes
3.1.1(B)	Pool contains 'HOT' spent fuel.	The OC spent fuel pool at the present does not contain 'HOT' spent fuel. If a core off-load is to be performed, then the pool will contain 'HOT' spent fuel. Plant procedures will be revised to prevent heavy load travel over "HOT" irradiated fuel until the fuel has reached a condition where it is no longer considered 'HOT' spent fuel.	Yes
3.1.3(B)	If crane interlock fails and procedures are violated, load may be dropped over spent fuel. The length of the load path for contaminated waste casks, transfer canal gates, spent fuel cask, shield plug and other loads normally handled near spent fuel is usually less than 10% of the potential path length and many possible paths do not even go over spent fuel.	The OC RBC is administratively controlled along safe load paths. The load path for transfer canal gates, shield plugs and other normally handled loads near spent fuel are not changed. The load path for contaminated waste casks and spent fuel casks is not over spent fuel in the spent fuel pool. These casks enter the spent fuel pool in the NE corner and lowered into a cylindrical steel structure. All stored fuel is to the west and south of this location. The load path for casks in the spent fuel pool is less than 10% of the total load path.	Yes
3.1.3(A)	Loads are carried over spent fuel. Between 5% and 25% of the path length is over spent fuel.	Plant procedures will be revised to minimize the length of travel of heavy loads over spent fuel.	Yes
3.1.2.1(CF)	Specific inputs are in the subsections.	OC RBC input is in the subsections that follow.	Yes

ITEM #	INPUT CRITERIA	OC RBC SYSTEM	IS INPUT REQUIREMENT SATISFIED?
CF.1.1	Protection against load hang-up combined with failure to follow prescribed load path due to poorly trained operator.	(a) The OC RBC is equipped with a control system that employs a load sensing system in the reeving system and the flux vector drive to detect load hang-ups. Upon detection, the sensing system stops the motors and engages the holding brakes. The flux vector drive is the first component that will react in an overload condition by limiting motor output torque. (b) Heavy load safe load paths are controlled by lifting procedures that control the lift for the particular heavy load. (c) All OC crane and rigging operators are qualified on operation of the crane and rigging.	Yes
CF.1.2	Limit switches are not operable, are intentionally bypassed and load path procedure is violated.	The limit switches on the RBC have been tested prior to placing the RBC in service. As discussed in CF.1.1, load paths are procedurally controlled. The crane operating procedure and operator training do not allow operators to bypass any limit switch on the crane. At OC, site mechanical or electrical maintenance personnel or contracted vendor services perform modifications to the crane in accordance with established configuration control processes. The crane is operated by in-house station services personnel. These processes and procedures prevent the crane operator from changing the setting of the crane.	Yes
CF.3.1	Two-blocking events due to operator error.	At OC, two-blocking on the RBC is prevented by redundant limit switches that are of different design to preclude common mode failures. The lower limit switch on each hoist is verified for operability prior to use of the RBC and each shift thereafter. Operators cannot bypass the limit switches from the control point. These controls lower the probability of operator error to cause a "two-blocking event".	Yes
CF.3.2	Failure of the lower limit switch	The RBC is equipped with a gear-driven lower limit switch that stops the hoist.	Yes

ITEM #	INPUT CRITERIA	OC RBC SYSTEM	IS INPUT REQUIREMENT SATISFIED?
CF.3.3	Failure of the upper limit switch	The RBC is equipped with upper and lower limit switches that are independent, of different designs and activated by separate mechanical means in conformance with NUREG-0554. Actuation of the upper limit switch removes power to the crane.	Yes
CF.2.1	Failure of crane components due to random failures, design deficiencies, improper maintenance or inadequate inspection.	(a) While random failures may be possible, steps were taken to minimize them. Such steps are: • Use of certified materials • Maintain stress limits below code allowables • Conduct tests of materials and crane systems • Have a qualified inspection program • Have a qualified maintenance program (b) Design deficiencies have been minimized by having all design verified by qualified personnel and independently reviewed by qualified personnel. (c) Maintenance/inspection of the RBC is performed monthly and yearly by certified crane inspectors. These actions minimize the probability of failures.	Yes
CF.2.2	Failure of a crane component causes a failure of the backup component, or the mechanism that causes failure of the first component also causes failure of the second component. This could be random or common mode effect.	The following systems of the RBC have primary and back up components. • Upper and lower limit switches to prevent 'two-blocking event' • Hoist braking system • Load sensing system • Trolley stopping mechanism • Reeving system All of the systems except for the reeving system are of different design to prevent common mode failures. All components on the trolley are procured to a qualified QA Program.	Yes

ITEM #	INPUT CRITERIA	OC RBC SYSTEM	IS INPUT REQUIREMENT SATISFIED?
CF.4	Single load path components shall have a safety factor of 2 above components in a dual system in accordance with NUREG-0554	The OC RBC complies with NUREG-0554. The safety factor for single load path components is 2 times that of dual load path components.	Yes
3.1.2.2	Failure of the rigging. Specific inputs are identified in the subsections that follow.	OC RBC inputs are in the subsections that follow.	Yes
3.1.2.2.1	Conformance to Section 5.1.1 of NUREG-0612. A poorly trained operator could select improper rigging and could fail to follow the proper load path.	Operating and rigging procedures that are in compliance with NUREG-0612, Sections 5.1.1 and 5.1.6, control use of the RBC. Selection of rigging for heavy loads requires an operator inspection prior to use. If the load is to be moved over the reactor with the cavity shield blocks removed or over the spent fuel pool, independent quality verification (QV) is required. These actions preclude the possibility for improper rigging usage by crane operators. Drawings and/or procedures are prepared to show safe load paths. Load paths are marked on the floor to the extent practical to minimize deviation from safe load paths.	Yes
3.1.2.2.2	Incorrect installation of dual rigging leading to failure of both sets of rigging due to a single common cause.	The discussion in 3.1.2.2.1 above is applicable here.	Yes
3.2.1	Fuel in the core has been sub-critical for a short period of time such that it still contains some enriched fuel.	Full core offloads of a highly reactive core are expected to occur infrequently.	Yes
3.2.2	Load falls in orientation to cause criticality.	This is hypothetical and does not require an input	Yes

NRC Question 5

Page E1-10, Subparagraph 1.2.2, Seismic Design and Evaluation, and Section 2.5 of enclosure 2, Seismic Design of Reactor Building Crane Compliance with NUREG-0612 and NUREG-0554, should address how overhead cranes are designed to retain control of and hold the load, and the bridge and trolley designed to remain in place on their respective runways with their wheels prevented from leaving the tracks during a seismic event. The licensee did not provide information for these requirements for the crane and trolley (e.g., do the wheels remain on the tracks during an operating basis earthquake (OBE) and safe shutdown earthquake (SSE)), however, the licensee has generally discussed loading under SSE conditions. Provide information that details the transfer of these seismic-induced loads to the building structure below the rails. The licensee should demonstrate the structural adequacy of the building components below the rails (e.g., walls and columns supporting the overhead crane) under all loading conditions (i.e., OBE and SSE), given the additional loads due to the new crane installation.

AmerGen Response to Question 5

The answer to this question is provided below. A discussion of the structural analysis requested by the NRC staff in a meeting on September 26, 2001, is included as Attachment G for the building structure analysis and Attachment H for the crane structure analysis.

The possibility of trolley or bridge wheels lifting off the tracks and the adequacy of building structure to carry the increased loads due to the new trolley were evaluated as described below.

Analyses were performed to determine whether SSE loads would induce any net uplift on the trolley wheels. In these analyses, there was no load on the hook as this was more likely to result in uplift loads on the trolley. The axial forces in the members attaching the trolley to the bridge representing the wheels were examined and found to be in compression in all cases. Therefore, it was concluded that the wheels would remain on the tracks during the SSE. Since the SSE forces are larger than the OBE forces, this conclusion would apply to the OBE case as well. A similar comparison of forces was done for the members representing the wheels supporting the crane bridge on the crane runway tracks with the same conclusion.

A separate model was analyzed for the reactor building steel superstructure to assess the structural adequacy of building components supporting the crane rails. A response spectrum analysis was performed using the licensing basis in-structure response spectra for the reactor building operating floor level, which is the base elevation for the steel superstructure. The cases analyzed were DL+LL+OBE and DL+LL+SSE with the bridge and the trolley in the most unfavorable positions. All of the elements of the steel superstructure including the crane rails

and the crane columns were checked against the applicable AISC code provisions to verify the structural adequacy given the additional loads due to the new trolley installation. The analysis and the results are discussed in the response to Question 9 below. The results showed that the crane runway and the structural supports meet the criteria.

The structural model for the building analysis included a model of the bridge, the new trolley and the hook with the live load on the hook. This model had elements representing the wheels of the trolley resting on the bridge rails and the wheels of the bridge resting on runway rails. The members representing the wheels of the trolley on the bridge and bridge on the crane rails were checked for net uplift (tension) forces and there were none. This further confirms that the wheels of the trolley and bridge remain on the rails during the OBE and SSE.

NRC Question 6

> Page E1-11, Subparagraph 1.2.4, Seismic Evaluation of the Reactor Building Steel Superstructure, indicates that a modification was required to better tie the crane bridge rails to the building steel columns at all locations. Why was it necessary (provide the information from your analysis that indicates where and why the modifications were made)? When did OCNGS complete these modifications?

AmerGen Response to Question 6

The bent plate clip connection between the rail girder top flange and the reactor building steel column flange was modified. The modification was installed where the bent plate clips are welded to the top flange of the rail girder and bolted to the building column (see Attachment G) at each of a total of 14 east and west column locations.

The modification was required for the following reason: The girder lateral load enters the bent plate clips as either tension or compression. When the load to the plate is in tension, it causes the plate to bend in weak axis bending at the bolt location on the column. Based on the magnitude of the calculated forces it was judged that the bent plate clip would exceed the stress criteria.

The computed forces at the bent plate clip connection in the model were used for the design of a modification. The modification consisted of strengthening the bending capacity of the original bent clip plates and replacing the connection bolts with a higher strength bolt. The final modification was reconciled in the seismic analyses. This modification was completed in July of 2000.

For more information on the reactor building steel superstructure seismic analysis see Attachment G.

NUREG-0554/0612, Compliance/Safety Analysis Report

Introduction

NRC Question 1

Provide a description of the trolley, hoist, and remaining systems and components of existing crane including drawings/schematics sufficient to determine compliance with NUREG-0612, Control of Heavy Loads at Nuclear Power Plants and NUREG-0554, Single-Failure-Proof Cranes For Nuclear Power Plants. In addition, identify all critical locations on the heavy load handling system and describe material test reports, non-destructive examinations, and miscellaneous inspections, tests, and certifications as applicable to the OCNGS upgraded handling system.

AmerGen Response to Question 1

The single-failure-proof reactor building crane trolley design encompasses the requirements of NUREG-0554. Detailed descriptions of the trolley, hoist and remaining systems are contained in the Safety Analysis Report (Enclosure 2 of The Reference) and Licensee Compliance Matrix provided in response to Question 10. The following are highlights of the design:

- Drum emergency stop brake includes 15% wear factor
- Redundant reeving with 10:1 safety factor including 15% wear factor
- 10:1 safety factor hook design including 15% wear factor
- Crush pad type equalizer system
- Testing and inspection compliant with ASME NOG-1 Section 7000
- Electrical control via variable frequency drives
- Redundant hoist upper overtravel limit switches provided
- Overspeed, overweight, mis-spooling and unbalanced load limits provided
- Cab control with radio control back-up

The following drawings and attachments provide additional information, which establishes compliance with NUREG-0554 and 0612:

Attachment A – Quality Matrix
Attachment B – Trolley Drawing
Attachment C – Main Hoist Reeving Diagram
Attachment D – Main Hoist Equalizer Assembly
Attachment E – Auxiliary Hoist Reeving Diagram
Attachment F – Auxiliary Hoist Equalizer Assembly
Attachment G – Reactor Building Superstructure Analysis
Attachment H – Seismic Qualification of OCGS Reactor Building Crane
Attachment I – Reactor Building Crane Mechanical and Electrical Drawings

In previous Question 3, a matrix was completed identifying which components of the crane are original and what has been replaced.

Attachment A identifies all critical components on the crane. Tests performed on these critical components and locations are described in Attachment A.

In addition to these tests, shop, load and operational testing was completed as described in Sections 7.2, 8.1, 8.2 and 8.4 of Enclosure 2 of the Reference. Load testing, 100% and 125%, of the trolley and hoists were performed at the manufacturer's test facility and not repeated at Oyster Creek. The test loads were based on main hoist design capacity of 125 tons and auxiliary hoist design capacity of 10 tons. The new trolley and hoists were shipped to Oyster Creek, installed in the as-tested configuration on the original bridge and operationally verified under light loads. The new trolley and hoists satisfy all the load test requirements of NUREG-O554. The justification for not performing a load test at Oyster Creek is presented below.

For the original crane, the procurement specification required a load test with 125% of the rated load (100 tons) that checked the operation of the bridge, trolley, hook and brakes for travel in all directions. A test was also required at 100% capacity to check the speeds of the bridge, trolley and hook in all directions. A 125% load test of the rated load of 100 tons was completed in the equipment hatch when the crane controls were upgraded in 1996. Travel during this test was limited to the area of the equipment hatch.

The original trolley design weight was 86,000 pounds. The new single-failure-proof trolley measured weight is less than 74,000 pounds. Therefore, load testing of the bridge was not repeated in that the operating load on the bridge, including the replacement trolley and a 105 ton load, does not exceed the original design load on the bridge considering the original trolley design weight and a 100 ton load.

The electrical system is not considered critical in accordance with ASME NOG-1 Section 6000. On the onset of vibration/motion on the operating floor, the operator is to activate the emergency stop located in the cab or radio control. This removes power from the crane, placing it in an electrically safe condition. Note, all braking systems are of the fail-safe type. The operator has, at all times, at least two (2) different means of stopping any motion.

NRC Question 2

> Describe how the safety systems operate as an integrated system. Also provide crane safety system descriptions of items such as drum brake system, torque limiters, failure detection system, drum safety structure, wire rope protection, emergency stop button, limit switches, overload sensing and indication, load control system, high speed holding braking, and balanced dual/reeving system as applicable to OCNGS upgraded crane.

AmerGen Response to Question 2

Safety systems are the systems that limit travel and protect the machinery. The safety systems operate as an integral system, i.e. tripping of one device triggers another safety feature such as brakes stopping motion. The entire safety system design satisfies NUREG-0554 using criteria from ASME NOG-1. The electrical interaction of the safety systems is described in Section 3.3 of Enclosure 2 of the Reference. The drum brake system is described in Section 4.9 of Enclosure 2 of the Reference. A description of how the crane safety systems operate after an operator error or equipment malfunction is shown in the following table:

CRANE SAFETY SYSTEMS

Fault Condition (Equipment Malfunction)	System Action	System Status After Action
Hoist primary (up) overtravel limit fails	Final hoist up limit trips	Brakes set stopping load. Power to crane removed.
Mechanical drive-train failure	Overspeed limit trips	Brakes set stopping load
Electrical drive failure	Drive faults	Brakes set stopping load
Electrical drive failure (overspeeding)	Overspeed limit trips	
Broken Rope	Unbalanced load limit trips	Brakes set stopping load
Rope Stretched	Unbalanced load limit trips	
Rope mis-spooled onto drum	Rope level wind limit trips	
Total loss of power	Main contactor trips	Power removed, all brakes set, stopping load
Undervoltage	Main contactor trips	Power removed, all brakes set, stopping load
Overvoltage	Drive fault trip	Brakes set stopping load
Phase Loss		
Overcurrent		
Drum Shaft Failure	Drum catching device engages drum	Drum resting in catching device, holds load
Drum Bearing/Support Failure		
Primary Holding Brake Failure	Secondary holding brake operational	Secondary holding brake holds load

Fault Condition (Equipment Malfunction)	System Action	System Status After Action
Secondary Holding Brake Failure	Primary holding brake operational	Primary holding brake holds load
Over Capacity Lift	Overweight limit trips or drive trips (overtorque fault)	Brakes set stopping load. Lowering of the load is permitted.
Load Hang-Up	Overweight limit trips or drive trips (overtorque fault)	Brakes set stopping load. Lowering of the load is permitted.
Hoist Overtravel (Up)	Primary hoist up limit trips	Brakes set stopping load. Only lowering motion permitted.
Hoist Overtravel (Down)	Primary hoist down limit trips.	Brakes set stopping load. Only raising motion permitted.
Bridge Overtravel	End of travel limit trips.	Brakes set stopping motion. Motion away from limit permitted.
Trolley Overtravel	End of travel limit trips.	Brakes set stopping motion. Motion away from limit permitted.
Lifting Load Off-Center	Unbalanced load limit trips.	Hoist motion stopped, setting brakes. Flashing warning light initiated.
Side Pulling (Scenario 1)	Unbalanced load limit trips.	Hoist motion stopped, setting brakes. Flashing warning light initiated
Side Pulling (Scenario 2)	Rope level wind limit trips.	Hoist motion stopped, setting brakes.
Over Capacity Lift (Travel Motion)	Drive trips.	Brakes set stopping crane.

The failure detection system is embedded in the control system and is described in Section 3.3 of Enclosure 2 of the Reference. The new trolley design provides redundant drum supports, which are described in Section 4.2 of Enclosure 2 of the Reference. Wire rope protection consists of an unbalance load limit, which detects excessive movement in the equalizer as well as hoist drum level wind limits, which detect improper threading of the wire rope on the drum. These systems are further described in Section 4.7 of Enclosure 2 of the Reference.

Emergency stop buttons are provided in the cab as well as each radio control transmitter. The system limit switches, including overload, are described in Section 3.3 of Enclosure 2 of the Reference. The braking systems are described in Section 4.9 of Enclosure 2 of the Reference. The equalizer and reeving systems are described in Section 4.1 of Enclosure 2 of the Reference.

The crane design basis does not use a mechanical type torque limiter drive train. Two-block protection is provided by the alternate method, which is to use redundant and diverse limit switches.

The flux vector frequency drive (FVFD) is the primary load control system, it also provides torque limiting as well as the following other safety features.

The flux vector frequency drive will monitor the hoist motor to ensure that it is producing the necessary torque to lift and accelerate the load. The drive will shut down the motor and set the brake when the motor cannot generate the required torque. Without the hoist motor encoder feedback of a flux vector drive, a variable frequency drive cannot determine with certainty if the hoist motor is generating sufficient torque to raise the load, which could lead to an uncontrolled movement of the load if the required torque of the load exceeds the motor capacity. This feature is why the RBC single-failure-proof hoist employs FVFD. This feature activates at any speed. This allows the independently wired overspeed sensor to only function if the drive should fail.

Adequate motor torque assurance at start is achieved through the flux vector frequency drive building up torque against the disc brake before the FVFD commands the brake to release. If proper torque is not achieved, the FVFD will not initiate a brake release command. If the proper torque level is achieved, both the motor and brake are suitable to handle the full load.

Brake check at stop is testing the brakes to ensure that they can handle the load. At a stop command, the drive will decelerate quickly to zero speed, hold or float the load at zero speed using the motor, and command the brake to set. The drive will then monitor the encoder feedback from the motor to ensure that the brake is maintaining or holding the load without slippage. If movement through the brakes is detected, the drive will maintain power to the motor in order to suspend the load safely. Then, after providing an alarm signal, the drive can be used to lower the load safely.

A FVFD can directly control motor torque independent of speed. The drive can be set up to limit the maximum torque the motor will produce. The hoist drive is programmed with maximum torque limits for both the raising and lowering directions. These parameters are used to prevent the motor from developing more torque than the mechanical components of the hoisting machinery can safely handle. This feature forms a first line of defense against possible two-blocking and load hang-up damage by limiting the energy the drive is putting into the hoisting system.

NRC Question 3

Provide a description of key safety system components on the upgraded crane.

AmerGen Response to Question 3

There are three areas where key safety systems are embedded in the RBC design. They are:

STRUCTURAL SYSTEMS

These systems support the lifted load including providing support during and after a Safe Shutdown Earthquake (SSE) event. The structural systems also support the mechanical and electrical systems. The design basis for structural systems is seismic.

Trolley Frame

The trolley frame supports the load via the components supported by the frame. The frame consists of a welded structure that also uses structural fasteners.

Drum Catching Device

These are structural members located approximately ½ inch below the drums which in the event of a drum support or drum shaft failure catch the drum. Design of the drum shell ensures that it will not fail in the event of a drum support or drum shaft failure.

MECHANICAL SYSTEMS

Mechanical systems provide the energy to move and stop the lifted load. The design basis for mechanical systems is redundant design as these systems are active and subject to wear.

Load Block

The load block directly supports the load. The load block was built in accordance with NUREG 0612, Appendix C, which allows the use of increased design margins for this component. Critical components of the load block include the hook, hook nut, crosshead, sheaves, load block sheave pin, load block steel and welds. Inspection and tests in accordance with Attachment A were performed on all of the above listed load block components in order to verify their ability to support the load.

Wire Rope

The wire rope directly supports the load. The dual reeving provides a redundant load path as required by NUREG-0554. A sample piece of wire rope from the same manufacturing lot as the supplied rope was subjected to a breaking strength test to confirm its published breaking strength. Wire rope fittings that connect the ropes to the equalizer system were subjected to a 200% proof test based on the published breaking strength of the wire rope in order to verify its suitability for the application.

Brake Systems

Redundant braking systems are provided. A high-speed disc brake is provided as the primary braking system. Drum emergency stop disc caliper brakes are provided on the drum making the hoist drive system redundant. Control braking is provided via the flux vector electrical drive system. All braking systems are individually dynamically load tested at 125% of the DRL.

Equalizer/Load Transfer System

This system equalizes the rope tension during normal operation. During a broken rope event the load transfer mechanism absorbs the transfer energy, limiting stress in the intact rope to a maximum value of 40% of the ultimate strength of the wire rope. The energy is absorbed via a crush pad inside a double acting cylinder. The piston rod inside the cylinder was proof tested at the maximum load transfer value.

ELECTRICAL SYSTEMS

Electrical systems provide the control of the mechanical energy to move and stop the lifted load. The design basis for the electrical system is dual or redundant. The operator has, at all times, at least two (2) different means of electrically stopping any motion.

At the onset of any vibration event on the refueling floor power to the crane is removed manually or may be lost as a result of the event. This places the crane in a safe condition with brakes set and the load held. Therefore, electrical systems are not required to operate during or after a seismic event.

Flux Vector Drive

The drive provides the basis of the electrical control system. The drive controls the motor as well as primary brake. It provides the control braking function via dynamic braking. The drive also provides the following safety features: torque assurance at start and stop, brake checking, load float and limiting input torque.

Hoist Travel Limits

These redundant upper travel limits stop hoisting motion. The limits are of differing designs. The final upper limit removes power from the hoist motor. These limits are provided in lieu of mechanical two-block protection.

Overspeed Limit

This limit senses hoist overspeed independent of the flux vector drive. The limit is electrically independent of the drive and is wired to set all brakes upon actuation.

Over Weight Limit

This limit senses over-capacity lifts. Upon detection of an over-capacity, the brakes are set. Only hoist lowering is permitted thereafter.

Wire Rope Protection Limits

These limits protect the wire rope from mis-spooling onto the drum and off center lifts. The mis-spooling limit is provided to assure both parts of rope wrapping on the drum spool properly into the rope grooves on the drum. The unbalanced load limit detects movement in the equalizer system, which would be an indication of wire rope stretch or yielding or lifting an off-center load.

Emergency Stop Buttons

These switches remove all power to the crane setting the holding brakes and placing the crane in a safe condition.

Test and inspections performed on many of the safety systems are shown in Attachment A, Quality Matrix. Systems not specifically addressed in Attachment A were verified during shop load testing and functional testing at Oyster Creek.

The requirements in Attachment A envelop the requirements of NOG-1, Table 7200-1 "Required Inspections or Test – Type 1."

NRC Question 4

> Provide a single failure analysis of hoist. The analysis should include crane overload, load hangup, two blocking, hoist drive train failure, drum support failure, overspeed, total loss of power while hoisting a critical load, hoist control system failure, and off-center lifts.

AmerGen Response to Question 4

The reactor building crane is single-failure-proof in accordance with the requirements of NUREG-0554. A Failure Modes and Effects Analysis (FMEA) (ACECO Document 1C0RR-18408-029, Revision 3) was prepared to identify any active component single failure points within the 105/10 ton reactor building crane. The analysis evaluated all active components and their failure modes to detail the effect of their failure on load control and/or crane system control. No single failure points were identified within the 105/10 ton reactor building crane.

The FMEA document is enclosed with this submittal as Enclosure 3.

Examples of specific failure modes, which are a result of equipment malfunction are shown in answer to Introduction Question 2. Operator error, although not a part of the FMEA, is also considered in the design. The crane will place itself in a safe condition upon detection of various operator input errors. Examples of this are shown in answer to Introduction Question 2.

NUREG-0612, Control of Heavy Loads at Nuclear Power Plants

NRC Question 3

The licensee in enclosure 2 did not provide a compliance statement for NUREG-0612, Section 5.1.6. Please provide your statement of compliance with NUREG-0612, Sections 5.1.6(1), Lifting Devices and 5.1.6(3), Interfacing Lift Points.

AmerGen Response to Question 3

Lifting devices and interfacing lift points will satisfy the requirements of NUREG-0612, Sections 5.1.6(1) and 5.1.6(3), respectively. Oyster Creek is in compliance with the requirements for lifting devices and interfacing lift points as required in NUREG-0612, Section 5.1.6 for all lifting devices and components being lifted, except for the reactor head strong back (see discussion for Question 1). All future heavy load moves will be in compliance with Section 5.1.6(1) and 5.1.6(3) of NUREG-0612.

NUREG-0554, Single-Failure-Proof Cranes for Nuclear Power Plants

NRC Question 1

Section 2.1 of NUREG-0554 discusses the sum total of simultaneously applied loads (static and dynamic) not resulting in stress levels causing permanent deformation, other than localized strain concentration, in any part of the handling system during operation. Please provide a summary of the structural analysis for various load combinations used to maintain allowable stress design margins.

AmerGen Response to Question 1

The mechanical components of the trolley were designed in accordance with CMAA Specification #70 (1999). The crane design service class was CMAA Class D. Allowable stresses are typically 20% of the ultimate strength of the material. Components that are not designed redundant are designed to 10% of the ultimate strength of the material. The factor controlling the mechanical design was the design rated load (DRL). Seismic criterion was not the controlling factor in the mechanical design, however it is a component of the design. The broken rope event was also considered in the design. A summary of the mechanical components, load combinations and stress criteria are shown in the following table. All calculated stresses were less than the given criteria.

The design of the trolley and verification of the existing bridge structure is addressed in RAI Question 9.

Mechanical Components
Load Combinations and Stress Criteria

COMPONENT	LOAD COMBINATION	CRITERION
Hook & Nut	DRL DRL + SEISMIC DRL + BROKEN ROPE	10% Ultimate 75% Yield 75% Yield
Upper Block Sheave Pin	DRL DRL + SEISMIC DRL + BROKEN ROPE	20% Ultimate 75% Yield 75% Yield
Hook Trunion	DRL DRL + SEISMIC DRL + BROKEN ROPE	10% Ultimate 75% Yield 75% Yield
Equalizer	DRL DRL + SEISMIC DRL + BROKEN ROPE	10% Ultimate 75% Yield 75% Yield
Drum	DRL DRL + SEISMIC DRL + BROKEN ROPE	20% Ultimate 75% Yield 75% Yield
Drum Brake	DRL DRL + SEISMIC DRL + BROKEN ROPE	Min. 150% Torque Min. 125% Torque Min. 125% Torque
Hoist Drive Shafting	DRL DRL + SEISMIC DRL + BROKEN ROPE	Min. 150% Torque Min. 125% Torque Min. 125% Torque
Motor	DRL	100% of hp Required to Lift DRL + Lower Block Weight
Motor Brake	DRL DRL + SEISMIC DRL + BROKEN ROPE	Min. 150% Torque Min. 125% Torque Min. 125% Torque

NRC Question 2

Section 2.2, Maximum Critical Load (MCL), requires an increase in the design margin of approximately 15 percent for component parts due to degradation. The main hook appears to have a margin of approximately 19 percent. The submittal also indicates that the auxiliary hoists (hook) have a margin of 15 percent. How can the auxiliary hoists have a margin of 15 percent of the MCL if the MCL is 10 tons and the DRL (design rated load) is 10 tons?

AmerGen Response to Question 2

The design margin was added to the DRL rating for each hoist. Components parts subject to degradation, including the wire ropes, hooks and braking systems, have at least a 15% design margin above the DRL rating.

Component	MCL(tons)	DRL(tons)
Bridge	105	105
Trolley	105	125
Main Hoist	105	125
Auxiliary Hoist	10	10

NRC Question 3

Cold proof testing is required under Section 2.4, Material Properties, for the crane and lifting fixtures for cranes already fabricated or operating with a corresponding dummy load equal to 1.25 times the MCL. When will you complete cold proof testing of the crane? Further, all welds whose failure could result in the drop of a critical load should be followed by nondestructive examination.

AmerGen Response to Question 3

NUREG-0554, Section 2.4 provides two alternatives to assure avoidance of brittle fracture/failure at the lower operating temperatures:

(1) Fracture toughness testing per ASTM E208 or Charpy "V" Notch (CVN) testing per ASTM A370, or
(2) Cold Proof Testing at the lowest operating temperature using a dummy load equal to 1.25 times the MCL, followed by NDE of critical weld joints.

During the crane upgrade modification the old trolley structure was discarded and replaced with a new trolley structure. The original bridge structure was reused. The bridge and original trolley structure were constructed of ASTM A7 carbon steel. The compliance statement in Enclosure 2 of the Reference, Section 2.4 establishes bases why cold proof testing of the trolley is not required. Charpy "V" Notch samples were machined from thicker (approximately 1 inch) plates of the old trolley structure and CVN tested per ASTM A370. The results met the acceptance standard of Section 2.4 of NUREG-0554 for crane operation above 45 degrees F. Therefore, the bridge structure does not require cold proof testing for crane operation above 45 degrees F. The 45 degrees F minimum crane operating temperature bounds the minimum operating temperature of the trolley. The Oyster Creek RBC operating procedure was revised to include the operating temperature restriction.

Based on the above justification, Oyster Creek does not plan to conduct cold proof testing of the RBC.

NRC Question 4

> Section 2.5, Seismic Design, requires the MCL plus operational and seismically induced pendulum and swinging load effects on the crane should be considered in the design of the trolley, and they should be added to the trolley weight for the design of the bridge. These loads are above the loads for the existing bridge. What are these loads and will the existing bridge be capable of handling these increased loads without modification?

AmerGen Response to Question 4

A roadmap of the structural analysis, requested in a September 26, 2001 meeting with the NRC, is included as Attachment G for the building structure analysis and Attachment H as the crane structure analysis.

All of the loads referenced in this question were accounted for as described below.

A comprehensive seismic qualification of the new single-failure-proof trolley mounted on the existing crane support structure (bridge) was performed. The fundamental performance requirement was for the crane to support the lifted load, without dropping it, during and after a seismic event.

Two design lift loads were considered:

- Only the new trolley was seismically qualified for a 125 ton lifted load in anticipation of future applications.

- All structural components of the existing crane and the new trolley were seismically qualified for a 105 ton lifted load.

The following requirements were imposed on the analysis:

- Seismic qualification of the new trolley in accordance with CMAA 70 (1999), Class D for CMAA Case 1, 2 and 3.
- Seismic qualification of the existing bridge and bogeys in accordance with CMAA 70 (1975) for CMAA Cases 1, 2 and 3.
- Boundary conditions applied to the model at the trolley/bridge and bridge/runway girder interfaces in accordance with ASME NOG-1.
- Both OBE and SSE conditions applied to the new trolley as well as the existing bridge.
- Seismically induced pendulum swinging load contributions per NUREG-0554, Section 2.5.
- Broken rope accident loads.
- Reactor building accident environmental conditions.

The existing bridge was analyzed for the following loads considered for the new trolley per CMAA 70 (1999) specification for Service Class D:

$$\text{CASE 1} = DL(DLF_B) + TL(DLF_T) + LL(1+HLF) + IFD$$

$$\text{CASE 2} = DL(DLF_B) + TL(DLF_T) + LL(1+HLF) + IFD + WLO + SK$$

$$\text{CASE 3} = DL + TL + EXTRA$$

Where:

DL =	dead load of the bridge and attached equipment
TL =	dead load of the trolley and attached equipment
LL =	lifted load including lifted devices
IFD =	inertia forces from drives
WLO =	operating wind load (not applicable in this case)
SK =	forces due to skewing (of rails)
EXTRA =	extraordinary loads (SSE in this case)
DLF =	dead load factor = 1.1 < 1.05 + [travel speed (fpm)]/2000 < 1.2 (B equals bridge; T equals trolley)
HLF =	hoist load factor = 0.15 < 0.005[hoist speed (fpm)] < 0.50

The SSE loads were determined from a response spectrum analysis of a detailed finite element model of the trolley and bridge and a portion of the crane rail using the Oyster Creek licensing basis in-structure response spectra for the reactor building at the elevation of the crane rails. Since the SSE allowable stress criteria used in the evaluation was conservative compared to the Standard Review Plan, it was shown that the OBE condition was enveloped by the SSE analysis. The model explicitly included the hook and cables along with the lifted load on the hook. Six different cases were analyzed with the trolley at the end, quarter point and midspan of the bridge, and with the hook in the down position and up position for each. It has also been shown by calculation that maximum OBE and SSE seismic accelerations corresponding to the pendulum mode frequencies are negligible.

All elements of the trolley and bridge structure were found to meet the acceptance criteria with modification.

NRC Question 5

> Section 2.6, Lamellar Tearing, states that all weld joints whose failure could result in the drop of a critical load should be nondestructively examined, and if any of these weld geometries would be susceptible to lamellar tearing, the base metal at the joints should be nondestructively examined. What methods were used to examine the various welds on the bridge and trolley structures? If all welds were not nondestructively examined provide justification for not completing examinations on all welds.

AmerGen Response to Question 5

Trolley structure components were welded together via primarily structural fillet welds. The design eliminates the concern of lamellar tearing, as heavy plates are not used. Hoist drum shell and hub welds were inspected by radiography and ultrasonic inspection (see Attachment A). Dye penetrant or magnetic particle examinations of new fabrication critical welds were also completed in accordance with Attachment A. All critical welds were nondestructively examined. Welds classified as non-critical were visually inspected by an AWS certified weld inspector to the criteria contained in AWS D1.1.

The welds on the bridge classified as critical are the bottom girder cover plate butt welds and the end truck connection welds. These welds were nondestructively examined by magnetic particle and ultrasonic methods. The results were evaluated to the requirements of AWS D.1.1 and were found acceptable.

NRC Question 6

> Section 2.7, Structural Fatigue, states that the cumulative fatigue usage factors should reflect effects of cyclic loading from both the construction and operating periods. For existing structural components, usage history was determined for the 40-year operating license, what new cumulative fatigue usage factors has OCNGS determined to be appropriate when considering potential use for an additional 20 years?

AmerGen Response to Question 6

The Oyster Creek reactor building crane was installed and tested late during plant construction and is believed not to have been used for major construction activities. The plant has been in operation for approximately 32 years. A conservative estimate of the number of lifts above 25 tons to date is 1200. Considering plant license renewal, another 28 years of plant life can be expected, doubling the number of lifts to 2400. Approximately 400 lifts will be required to remove spent fuel from the fuel pool. The total of estimated lifts is then 2800. The crane is designed in accordance with CMAA Specification #70. All stresses on crane components are below the CMAA #70 allowables. Therefore, the fatigue usage factor from CMAA #70 can be used for the RBC. The minimum number of cycles in CMAA #70 is 20,000, which by far exceeds the estimated lifts for the possible extended life of the plant.

NRC Question 7

> Section 3.3, Electric Control Systems, states that an emergency stop button should be added at the control station to stop all motion. Does OCNGS plan on providing an emergency stop button function to stop all motion on the upgraded crane? If not, please provide justification for not providing this function as well as what equivalent methods you will provide to meet the intent of the emergency stop button on the upgraded crane.

AmerGen Response to Question 7

As stated in the compliance statement on page E2-16 of Enclosure 2 of the Reference, the RBC is equipped with emergency stop buttons in each of the two control stations. An emergency stop button is located in the operator's cab and a toggle switch on the radio control transmitter is the other emergency stop button. The function of these buttons is to stop all motion by removing power to the RBC in any emergency.

NRC Question 8

> Section 3.4, Emergency Repairs-what design features are relied upon to meet the requirements of this section and how do they interact to allow uncomplicated operation of the crane? Have laydown area(s) been identified in the event the crane becomes immobilized due to malfunction?

AmerGen Response to Question 8

The RBC drum emergency stop disc caliper brakes permit repairing, adjusting or replacing components in the hoist drive train up to the drum with the load supported and retained in a safe position via the drum brakes. An energy source (compressed air) is provided on the trolley to allow manual operation of the brakes.

Manual release of the trolley and bridge brakes allows movement of these components along the entire travel path of the RBC.

Manually operated pneumatic valves are provided for actuating the drum emergency stop brake to lower the load. The RBC operating procedure contains the procedural steps necessary to accomplish lowering of a load. The design includes means for manual movement of the bridge and trolley to a safe laydown area. All movements can be completed during a loss of power event.

All currently identified heavy loads have designated safe laydown areas. All future heavy loads will have safe laydown areas.

NRC Question 9

> The licensee indicated that the entire reactor building steel superstructure that supports the crane structure was analyzed using the SAP2000-Plus computer code for the safe shutdown earthquake (SSE) and operating basis earthquake (OBE) load cases. With respect to this structural analysis, the licensee is requested to provide the following:

AmerGen Response to Question 9

The answer to this multi-part question is provided below for each part. A roadmap of the structural analysis, requested in a September 26, 2001 meeting with the NRC, is included as Attachment G for the building structure analysis and Attachment H as the crane structure analysis.

Q9(a) Describe the applied loading conditions.

AmerGen Response

Two loading combinations were applied:

- DL + LL + OBE
- DL + LL + SSE

The DL included the weight of the new trolley and the hook load (MCL) on the crane. The LL included a distributed roof load likely to be present at the time of an earthquake. Short duration live loads, such as impact loads to account for starting and stopping of the crane motors, considered in the design analysis of the crane itself were not included in the analysis of the steel structure as they would not be coincident with the earthquake. The OBE and SSE were the licensing basis in-structure response spectra at the reactor building operating floor level, which is the base of the steel superstructure. Damping was 4% for OBE and 7% for SSE.

A model of the crane was included in the structural model to obtain an accurate loading on the crane rails. A study using a simplified model was done to determine the two worst case positions for the crane and trolley. The detailed model of the steel superstructure was with the crane and trolley in each of these positions.

Q9(b) Indicate whether the referenced reactor building analysis was linear or nonlinear. If nonlinear analysis was performed, indicate whether material nonlinearity was included in the data report.

AmerGen Response

The model was a linear elastic finite element (beam) model of the reactor building steel superstructure including the columns, column bracing, roof trusses, roof truss bracing, crane rails, crane bridge girders, the new trolley and the hook load. The analysis was a linear elastic static analysis for DL+LL and a linear elastic response spectrum analysis for OBE and SSE. There were no nonlinearities in the model or the analysis.

Q9(c) Discuss how the response spectra were generated and indicate whether they envelop the licensing basis design response spectra.

AmerGen Response

The response spectra used in the analysis were the Oyster Creek licensing basis in-structure response spectra at the operating floor of the reactor building.

Q9(d) In a tabular form, provide the maximum analysis results (i.e., stress and deformation) and the corresponding locations on the building structure.

AmerGen Response

The analysis was a linear elastic analysis. The stresses in the structure elements were checked against normal AISC allowable stress for DL+LL+OBE, and 1.6 times normal AISC allowable stress for DL+LL+SSE per the Standard Review Plan. Element deformations were not checked explicitly as they would necessarily be within the elastic range.

The following are the maximum interaction ratios for the various elements of the steel superstructure:

Building Components	**DL+LL+OBE**	**DL+LL+SSE**
W14X74 Columns	0.94≤1.0	1.16≤1.6
Column Bracing	0.77≤1.0	1.05≤1.6
Crane Rail Girder	0.96≤1.0	1.15≤1.6
Roof Truss Chords	1.00≤1.0	1.37≤1.6
Roof Truss Bracing	0.98≤1.0	1.09≤1.6

The following are the maximum computed displacements (N-S, E-W, Vertical) in inches relative to the operating floor:

	OBE	**SSE**
Roof Truss Joints	0.39, 0.44, 0.26	0.51, 0.64, 0.37
Crane Runway/Bridge	0.95, 1.07, 0.48	1.22, 1.45, 0.61

Q9(e) Indicate whether the crane structure was included in this superstructure analysis. If not, provide responses to items (a), (b) and (d) above for the crane structural analysis.

AmerGen Response

A model of the crane was included in the superstructure analysis in order to obtain accurate loading of the crane rail. This model, however, was not used to qualify the crane. A separate, more detailed finite element model was developed for qualification of the crane.

The reactor building crane must only satisfy SSE design criteria to comply with USNRC Regulatory Guide 1.29, NRC Position 2, which basically states that structural failure must be prevented, however, the design considered both the OBE and SSE events.

The loading conditions considered in the crane qualification are given in the response to Question 4 in this section above.

The model and analysis were linear elastic. Conservative linear elastic response spectrum analyses were used.

Calculated deflections of the reactor building crane, obtained from the detailed finite element analysis of the crane, are summarized below. Maximum deflections for the DL+LL+SSE combined load condition occur for the TMHD (Trolley at Midspan, Hook Down) model configuration. The location selected for reporting of these deflections corresponds to the center of the lower sheave assembly which is representative of the gross deflection of the trolley assembly.

Since the reactor building crane model includes the building runway girders, these deflections are considered to be representative of the total deflections, which can be expected although sidesway effects of the reactor building superstructure are not included. Deflections are for the 105 ton lifted load condition. Orientation of the reactor building crane model coordinate system is such that +X aligns with south, +Y is upward and +Z aligns with west. All deflections are reported in inches.

Trolley maximum deflections for the TMHD configuration and DL+LL+SSE loading combination:

	X- Deflection	Y-Deflection	Z-Deflection
105 Ton Lifted Load	1.36	-1.17	1.67

The CMAA Specification #70 (1999) stress checks were performed for all elements of the new trolley. All stress interaction ratios were less than or equal to unity. The critical locations and loading conditions within the trolley were:

- Weak axis bending (in the horizontal plane) of the main load girt and auxiliary girt produced by E/W seismic loading is the most significant contributor to the state of stress in these members. The most critical area is at midspan of the girts.

- Torsion of the end truck box members at the trolley wheels, where the flange is slotted, produces high torsional shear stresses due to the cross section being open.

- Web buckling capacities of the main load girt, auxiliary load girt and to a lesser degree, the trolley end trucks are most sensitive to the web plate thickness as opposed to diaphragm spacing or other parameters.

- SSE loading conditions proved to be more demanding on the trolley members than the postulated broken rope accident condition in terms of stress interaction ratios.

- Maximum seismic response occurs for the TEHU model (trolley at end of bridge, hook in up position) due to the E/W racking mode frequency falling on the peak of the SSE response spectra. It was necessary to develop a refined model to more accurately represent the trolley stiffness in the E/W direction and thereby reduce the E/W racking mode frequency to fall below the peak response region.

The CMAA Specification #70 (1975) stress checks were performed for all elements of the existing crane structure. The maximum stress interaction ratio was 1.315 versus the acceptable value of 1.33 for the flexural stress at midspan of the bridge girder.

In reviewing the capacity versus demand situation for each structural component of the reactor building crane, only one instance occurs where the member demand exceeded the capacity. This instance involves the end truck connection members, which perform the function of maintaining a constant separation distance between the pair of end trucks at each end of the crane bridge. A detailed investigation of these members shows that the energy absorption capacity, with appropriate factors of safety, exceeds the demand and the member is capable to perform its intended function, which is to maintain the distance between the end trucks. Using an energy basis under the SSE loading condition is in accordance with the Oyster Creek Updated FSAR, Section 3.8.4.5.

Q9(f) Indicate whether all computer codes utilized in performing the structural analyses were benchmarked against computer codes previously approved by the staff.

AmerGen Response

The superstructure was analyzed using the SAP2000-Plus computer code. This is a public domain code in wide use, based on SAP IV. It was verified by EQE, under the EQE 10 CFR 50, Appendix B, Quality Assurance Program, for use in nuclear safety-related calculations by benchmarking a set of verification problems against the same set of problems solved via another acceptable method. This validation technique is in accordance with NRC Standard Review Plan (SRP) Section 3.8.1.

The crane was analyzed using the STARDYNE program. This program has been widely used in applications such as this. American Crane possesses a QA certified version of this program. The results obtained from EQE's non-certified version were compared to the results of the same analysis obtained from ACECO's certified version to satisfy quality assurance requirements. The STARDYNE program was verified by ACECO, under the ACECO Quality Assurance Program, for use in nuclear safety-related calculations by benchmarking on a set of verification problems against the same set of problems solved via another acceptable method. This validation technique is in accordance with NRC SRP Section 3.8.1.

NRC Question 10

In addition, the licensee's NUREG-0554, Single-Failure-Proof Cranes for Nuclear Power Plants, compliance statement did not adequately address all concerns of various sections. The below 2 matrix pages provides an example of how to address the concerns of NUREG-0554. The licensee is requested to develop and submit a similar matrix for the OCNGS.

AmerGen Response to Question 10

The requested compliance matrix is listed beginning on the next page.

Reference: AmerGen Letter No. 2130-01-20042 dated April 4, 2001, "Technical Specification Change Request No. 281"

SEC #	NUREG REQUIREMENT	LICENSEE COMPLIANCE	LICENSEE EXCEPTIONS
2.1 Construction And Operating Periods	Design criteria for construction phase operation.	Replacement crane is limited to operation and decommissioning load handling. The original crane was installed late during the plant construction phase. Therefore, it is believed it was not used for major load handling evolutions prior to plant operation.	No exceptions noted by licensee.
	Allowable design stress limits of Table 3.3.3.1.3-1 of CMAA Specification #70–1975.	CMAA Specification #70 (1999) Section 3.4, Allowable Stresses for Case 1 (crane in regular use under principal loading) was used, which bounds the 1975 specification.	
	Design reflects the appropriate duty cycle in CMAA Specification #70.	The hoist and trolley were built to service Class "D". This exceeds current and projected crane usage. The existing bridge is being reused. Its design was confirmed to CMAA #70-1975 as part of NUREG-0612 Phase 1 compliance. The bridge design basis exceeds current and projected usage.	
	Sum total of simultaneously applied loads (static and dynamic) should not result in stress levels causing permanent deformation, other than localized strain concentration, in any part of the handling system.	Structural analysis for various load combinations was used to maintain allowable design margins. The trolley was designed to a 125 ton MCL and DRL using loading combinations from CMAA Specification #70 (1999). The bridge was analyzed to a 105 ton MCL and DRL. The crane MCL is 105 tons. The crane mechanical components were designed for the DRL. All stresses were below the acceptance criteria. For components that have dual paths, allowable stresses are typically 20% of the ultimate strength of the material. For components that are designed as single path, allowable stresses are 10% of the ultimate strength of the material. The results of the analyses indicate that stress levels will not cause permanent deformation other than localized strain concentration.	
	Effects of cyclic loading induced by jogging or plugging an uncompensated hoist control system should be included in the design specifications.	The cranes design, including trolley, precludes cyclic loading induced by jogging or plugging by employing flux vector variable frequency drives which provide for smooth slow speed positioning and for gradual acceleration and deceleration.	

SEC #	NUREG REQUIREMENT	LICENSEE COMPLIANCE	LICENSEE EXCEPTIONS
2.2 Maximum Critical Load	Single-failure-proof crane should be designed to handle the maximum critical load (MCL).....	The upgraded reactor building crane is designed to handle a MCL of 105 tons for main hoist and a MCL of 10 tons for the auxiliary hoist.	No exceptions noted by licensee.
	Increase of ~15% of the design for component parts subjected to degradation due to wear and exposure.	Wearing components in the main and auxiliary hoists including wire rope, hooks and brakes have at least a 15% increase in the design above the DRL rating to account for degradation due to wear and exposure.	
	Certain single-failure-proof cranes may be required to handle non-critical loads of magnitude greater than the MCL during plant maintenance period.	The Oyster Creek RBC does not handle loads of magnitude greater than the MCL.	
	The DRL rating marked on the crane separately from the MCL marking.	The crane is marked to clearly indicate the MCL and DRL.	
2.3 Operating Environment	Operating environment ..... specified for the crane and lifting fixtures.	45°F to 130°F, 100% relative humidity, atmospheric pressure and no emergency corrosive or hazardous conditions are specified.	No exceptions noted by licensee.
	Closed boxed sections of the crane structure vented to avoid collapse during containment pressurization.	The crane is located outside of primary containment. The crane is not subject to pressurization events. The closed box sections are vented.	
	Drainage should be provided to avoid standing water in the crane structure.	Closed box sections have been provided with drain holes.	

SEC #	NUREG REQUIREMENT	LICENSEE COMPLIANCE	LICENSEE EXCEPTIONS
2.4 Material Properties	Already fabricated crane structural components should be tested by subjecting the crane to a test lift at the lowest anticipated operating temperature.	Existing critical crane structural components were subjected to Charpy V-Notch testing to determine the minimum operating temperature of 45°F. Therefore, a test lift at the lowest anticipated operating temperature is not necessary.	No exceptions noted by licensee.
	Structural members (exceeding ½ inch) essential to structural integrity tested in accordance with the following impact test requirements. Either drop weight test per ASTM E-208 or Charpy test per ASTM A-370 may be used for impact testing.	All critical structural members of the trolley were subjected to Charpy V-Notch testing as defined in Attachment A. No test required for 5/8 inch or less nominal thickness steel per NC-2300 (ASME NOG-1).	No exceptions noted by licensee.
	Toughness recommendations were developed … typical material section thickness for crane girders … (2 inch.). later information indicates that material thickness of (4 inch) or more … The rules of ASME Code Class 3 Charpy testing do not make adjustments for thickness greater than (2 1/2 inch)…	The thickness of the top and bottom girder plate is 1 ¼ inch. The girder side plates are 5/16 inch thick. The typical material sections recommendations are applicable.	No exceptions noted by licensee.
	As an alternative, coldproof testing consisting of a single dummy test load equal to 1.25 times the MLC shall be used to establish the minimum operating temperature.	The alternate method was not used as critical components were subjected to Charpy V-Notch testing to determine lowest operating temperature.	
	Cranes and lifting fixtures made of low-alloy steel such as ASTM A514 should be subjected to the coldproof test in any case.	Only the drum shells were fabricated from A514 steel. This steel and associated welds were subjected to Charpy V-Notch tests. The toughness results showed that the drum can safely operate at temperatures much lower than the minimum operating temperature of 45°F without concern for brittle fracture.	
	Cast iron should not be used for load-bearing components such as rope drums. Cast iron may be used for electric motor frames and brake drums.	Cast iron was not used for any load bearing components.	
	Alternative methods of fracture analysis that achieve an equivalent margin of safety against fracture …	Alternative methods were not used.	

SEC #	NUREG REQUIREMENT	LICENSEE COMPLIANCE	LICENSEE EXCEPTIONS
2.5 Seismic Design	Crane designed to retain control of and hold the load.	The crane is designed to retain control of and hold the 105/10 ton MCL for all load combinations including seismic OBE and SSE events.	No exceptions noted by licensee.
	Bridge and trolley designed to remain in place during a seismic event with their wheels prevented from leaving the tracks.	The seismic analysis determined that uplift is not present on the bridge and trolley wheels. Therefore, the bridge and trolley wheels will not leave the tracks.	
	Bridge remains on the runway with brakes applied, and the trolley remains on the crane girders with brakes applied during a SSE event.	Analysis determined that the bridge will remain on the runway and the trolley will remain on the bridge with brakes applied during an SSE event. Bridge and trolley brakes are always applied when the crane is not being operated, or when power is removed from the crane.	
	Crane designed and constructed in accordance with regulatory position 2 of Regulatory Guide 1.29.	The crane design satisfies regulatory position 2 of Regulatory Guide 1.29. The crane is designed to remain in place and hold the load during and after the SSE event.	
	The MCL plus operational and seismically induced pendulum and swinging load effects ..... considered in the trolley design and they should be added to the trolley weight for the bridge design.	The maximum pendulum frequency was calculated to be 0.34 hertz. The corresponding horizontal seismic accelerations from the response spectra were found to be negligible. The operational and seismically induced pendulum and swinging loads were considered but did not control the design.	No exceptions noted by licensee.
2.6 Lamellar Tearing	Examine the (weld) joints by radiography or ultrasonic inspection ... to ensure the absence of lamellar tearing in the base metal and soundness in the weld metal.	Crane structural components are welded together via primary structural fillet welds. The design eliminates the concern of lamellar tearing as heavy plates are not used. Lamellar tearing is only a concern when heavy plates are used. Hoist drum shell and hub welds were inspected by radiography and ultrasonic inspection.	No exceptions noted by licensee.

SEC #	NUREG REQUIREMENT	LICENSEE COMPLIANCE	LICENSEE EXCEPTIONS
2.6 Lamellar Testing (cont.)	Weld joints whose failure could result in the drop of a critical load should be nondestructively examined. If these weld joint geometries would be susceptible to lamellar tearing, the base metal at the joint should be nondestructively examined.	Dye penetrant or magnetic particle examinations of new fabrication critical welds were completed in accordance with Attachment A. The weld joint geometries are not susceptible to lamellar tearing as the plates used in the joints are not heavy plates. The use of plates considered thin eliminates lamellar tearing concerns.	No exceptions noted by licensee.
2.7 Structural Fatique	Fatigue analysis should be considered for the critical load-bearing structures and components of the crane handling system	For existing structural components, historical data indicates approximately 1200 lifts greater than 25 tons have been completed. Analysis indicates approximately 2800 will be required of the crane considering plant license renewal and decommissioning. This value is well below the CMAA Specification #70 allowed cycles of 20,000. Therefore, additional fatigue analysis is not needed for any components on the crane.	No exceptions noted by licensee.
	Cumulative fatigue usage factors should reflect effects of the cyclic loading from both construction and operating periods.	New trolley structural fatigue usage factors from CMAA Specification #70 (1999), Table 3.4.7-1 were used. Trolley mechanical fatigue per CMAA Specification #70 (1999), Section 4.11.4.2, using class D service classification. Bridge fatigue usage factors per CMAA Specification #70 (1975), Table 3.3.3.1.3-1 were used. The crane was installed late during construction and it is believed it was not used for major construction activities. The cumulative usage factor reflects the operating period.	No exceptions noted by licensee.
2.8 Welding Procedures	Preheat temperatures for all weldments specified in the weld procedures.	All welding procedures specify preheat temperatures per AWS D1.1.	No exceptions noted by licensee.
	Post weld heat treatment for all weldments specified in the weld procedures. To include Section 2.6 welds, which shall be post-weld heat treated in accordance with Subarticle 3.9 of AWS D1.1.	All welding procedures specify post weld heat treatment per AWS D1.1, 1998, which is in accordance with Subarticle 3.9 of AWS D1.1, 1976.	

SEC #	NUREG REQUIREMENT	LICENSEE COMPLIANCE	LICENSEE EXCEPTIONS
3.1 General	Primary or principal load-bearing components, equipment, and subsystems such as driving equipment, drum, rope reeving system, hooks, blocks, control systems, and braking system should receive special attention.	Attachment A defines the components of the trolley, which are defined as critical and the quality checks these components are subjected to.	No exceptions noted by licensee.
3.2 Auxiliary Systems	Auxiliary hoisting systems of the main crane handling system …… single-failure-proof.	The design for auxiliary hoisting systems are single-failure-proof.	No exceptions noted by licensee.
	Auxiliary systems or dual components for the main hoisting mechanism ….. immobile safe position.	Dual systems are provided in both main and auxiliary hoists ensuring that upon a component or subsystem failure the load will be retained.	
3.3 Electric Control Systems	Automatic controls & limiting devices designed ….. disorders due to inadvertent operator action, component malfunction ……. will not prevent the handling system from stopping and holding the load.	Special features are provided in the design to sense overtravel (control and power), overweight, overspeed, mis-spooling, and unbalanced reeving. The electrical design addresses the effects of phase reversal or phase loss in the hoist power supply (USNRC letter dated August 26, 1983) as well as undervoltage, overvoltage, and undercurrent protection. Detection of any of the above events removes power from the hoists, placing them in a safe condition. Bridge and trolley motions are controlled by over travel limit switches, which stop motion upon actuation.	No exceptions noted by licensee.
	Emergency stop button added to the control station to stop all motion.	Two emergency stop buttons are available, one on the remote radio controller and the other mounted in the cab. Activating these devices removes power from the crane, placing it in a safe condition.	

SEC #	NUREG REQUIREMENT	LICENSEE COMPLIANCE	LICENSEE EXCEPTIONS
3.4 Emergency Repairs	A crane that has been immobilized because of malfunction or failure of controls or components while holding a critical load should be able to hold the load or set the load down while repairs or adjustments are made.	The drum emergency stop disc caliper brake system permits repairing, adjusting, or replacing components with the load supported and retained in a safe position. Manually operated pneumatic valves are provided for actuating the drum emergency stop brake to lower the load.	No exceptions noted by licensee.
	Manual operation of the hoisting system and the bridge and trolley transfer mechanisms to a safe laydown area.	Manually operated pneumatic valves are provided for actuating the drum emergency stop brake to lower the load. Design includes means for manual movement of the bridge and trolley, as well as manually lowering the load as described above. All movements can be completed during a loss of power event.	
	Crane design and operating area include provisions ..... cause release of radioactivity during corrective repairs, replacements or adjustments are being made to place the crane handling system back into service after component failure(s).	The crane trolley and/or bridge can be moved away from any location where the malfunction occurred for repairs or replacement of parts with a suspended load.	
4.1 Reeving System	Protection against excessive wire rope wear ..... through scheduled inspection & maintenance.	Maintenance manual includes instructions for scheduled inspection and maintenance of the wire rope consistent with OSHA 1910.179.	No exceptions noted by licensee.
	Design of the rope reeving system(s) should be dual with each system providing separately the load balance .. configuration of ropes & rope equalizer(s).	The design of the reeving system is dual with each system providing independent load balance on the head and load blocks through configuration of ropes and rope equalizers.	
	Selection of the hoisting rope or running rope .... to maintain efficient working of the individual wire strands ..... during the hoisting operation.	The selection of the wire rope for this reeving system is consistent with the wire rope manufacturers recommendations to maintain an efficient working of the wire rope.	

SEC #	NUREG REQUIREMENT	LICENSEE COMPLIANCE	LICENSEE EXCEPTIONS
4.1 Reeving System (cont.)	The effects of impact loadings, acceleration and emergency stops should be included in selecting rope reeving systems.	Dynamic loading including reeving efficiency is considered in sizing the wire ropes and reeving system components.	No exceptions noted by licensee.
	Maximum load, including static and inertia forces, on each individual wire rope ... with MCL attached should not exceed 10% of the manufacturer's published breaking strength.	The maximum load including static and dynamic forces does not exceed 10% of the wire rope manufacturer's published breaking strength.	
	Consider the wire rope yield strength, as well as ultimate strength, when specifying wire rope to ensure the desired margin on rope strength.	The wire rope selection criteria used is based upon the ultimate strength of the rope. During a broken rope event the transfer load is limited to 40% of the ultimate strength of the rope to ensure satisfactory safety margins are maintained, thereby minimizing rope yield strength concerns.	
	Maximum fleet angle from drum to lead sheave in the load block or between individual sheeves should not exceed 3 ½° at any one point during hoisting except that for the last three (3) feet of maximum lift elevation the fleet angle may increase slightly.	Maximum fleet angle is 3 ½° except the last 3 feet of upper travel where there is an approximate 1° increase in fleet angle.	
	Reverse bends for running wire ropes should be limited, and the use of larger sheaves considered where a disproportional reduction in wire rope fatigue life would be expected from the use of standard sheave diameters for reverse bends.	The design does not use reverse bends. Sheave diameter ratios greater than 20:1 (CMAA Specification #70, Section 4.5.2 for Class D service) are used on all running sheaves.	
	Equalizer for stretch and load on the rope reeving ... beam or sheave type or combinations thereof.	The design of the main hoist equalizer is a combination of sheave and beam (See Attachment D). The auxiliary hoist equalizer is a beam type (See Attachment F)	
	Dual rope reeving system with individual attaching points and means for balancing or distributing the load between the two operating rope reeving systems will permit either rope system to hold the critical load and transfer the critical load without excessive shock in case of failure of the other rope system.	The design to balance and distribute the forces associated with load transfer in the main hoist are absorbed via a double-acting cylinder located within the equalizer, which is fitted with a honeycomb crush pad. The auxiliary hoist uses a rocker assembly. The design ensures that transfer of the critical load does not impart excessive shock into the remaining rope, which could possibly cause failure.	

SEC #	NUREG REQUIREMENT	LICENSEE COMPLIANCE	LICENSEE EXCEPTIONS
4.1 Reeving System (cont.)	Pitch diameter of running sheaves and drums ..... in accordance with recommendations of CMAA Specification #70.	The drum pitch diameter is 32.3 times wire rope diameter (1 ½ inch). Running sheaves pitch diameter is a minimum of 20 times the wire rope diameter. This is in accordance with CMAA Specification #70.	No exceptions noted by licensee
	Dual reeving system may be a single rope from each end of a drum terminating at one of the blocks or equalizer with provisions ... designed for total load.	The design has one drum with two ropes, with a balanced dual reeving system with the ropes terminating on the equalizer. Each rope is capable of carrying the total load.	
	Alternatively, a 2-rope system may be used from each drum or separate drums using a sheave equalizer or beam equalizer or any other combination that provides two separate and complete reeving systems.	This alternative reeving system is not used on the crane.	
4.2 Drum Supports	Load hoisting drum ..... structural and mechanical safety devices to limit the drop of the drum ... from disengaging from its holding brake system.	The drum catching device is a steel structure which ensures that a shaft or bearing failure will not allow the drum to disengage from the drum emergency stop brake.	No exceptions noted by licensee
4.3 Head and Load Blocks	Head and load blocks should be designed to maintain a vertical load balance about the center of lift ..... reeving system of dual design.	The head and load blocks are designed to use a dual reeving design to maintain a vertical load balanced about the center of the lift. The balanced dual reeving system eliminates tilt of the load block.	No exceptions noted by licensee.
	Load-block assembly should be provided with two load-attaching points, ... each ....able to support a load of three times the load (static and dynamic) .... without permanent deformation.	The design provides an equivalent margin of safety by providing a single load path (attachment point) with a 10:1 factor of safety on ultimate. The main hook design MCL is 125 tons. The auxiliary hook design MCL is 10 tons. Design is compliant with NUREG-0612, Appendix C.	No exceptions noted by licensee.

SEC #	NUREG REQUIREMENT	LICENSEE COMPLIANCE	LICENSEE EXCEPTIONS
4.3 Head and Load Blocks (cont.)	Individual component parts of the vertical hoisting system .... head block, rope reeving system..... load block designed to support a static load of 200% of the MCL.	Head and load block are designed to support a static load of 200% of 125 tons (main hoist) and 10 tons (auxiliary hoist) based upon a 5:1 factor of safety on ultimate and 3:1 factor of safety on yield.	No exceptions noted by licensee
	Individual component parts of the vertical hoisting system ....load block....dual-load attaching device ..... designed to support a static load of 200% of the MCL.	Individual components parts of the vertical hoisting system are designed to support a static load of 200% of the MCL based on a 10:1 factor of safety on ultimate.	
	200% static load test performed for hook.	Load attaching points for main hoist sister hook were staticly load tested at 250 tons (200%). The auxiliary hoist hook was tested at 20 tons (200%).	
	Measurements of the geometric configuration of the hooks .... before and after the load test.	All hook critical dimensions were measured before and after the load test.	
	Hook volumetric and surface nondestructive exams, to verify soundness and integrity, after the load test.	Ultrasonic and magnetic particle exams were performed after the load test.	
	Load block should be non-destructively examined by surface and volumetric techniques.	The load block and its components were nondestructively examined by surface and volumetic inspections.	
	Results of examinations documented and recorded.	The examination and test results were recorded and reviewed by the licensee.	
4.4 Hoisting Speed	Maximum hoisting speed for the critical load ..... limited to "slow" column of CMAA Specification #70.	Maximum main hoist speed of 5 fpm, as given in CMAA Specification #70 (1975), Figure 70.6 for slow speed. Auxiliary hoist speed is 20 fpm. Verified during functional test.	No exceptions noted by licensee
	Conservative industry practice limits the rope line speed to 50 fpm at the drum.	By design, the maximum line speed of the wire rope is less than 50 fpm for both hoists.	

SEC #	NUREG REQUIREMENT	LICENSEE COMPLIANCE	LICENSEE EXCEPTIONS
4.5 Design Against Two-Blocking	The reeving system designed to prevent the cutting or crushing of the wire rope if a two-blocking incident were to occur.	The design employs the alternate method, i.e. redundant travel limit switches.	No exceptions noted by licensee
	The mechanical and structural components of the complete hoisting system .... required strength to resist failure ... for two-blocking and load hangup.	The design employs the alternate method, therefore the hoisting system is not designed to resist two-blocking.	
	Means provided within the reeving system located on the head or on the load-block combinations to absorb or control the kinetic energy of rotating machinery during the incident of two-blocking.	The design employs the alternate method. Means to absorb or control the kinetic energy of rotating machinery is via the hoist braking systems.	
	As an alternative, the protective control system to prevent the hoisting system from two-blocking should include, as a minimum, two independent travel-limit devices of different designs, and activated by separate mechanical means. These devices de-energize the hoist drive motor and the main power supply to prevent the hoist from two-blocking.	The design used the alternate method. Primary rotary limit switch on the drum shaft senses both the upper and lower positions of the load block travel. Hoist motion is stopped by de-energizing the hoist controls. Secondary lever operated limit switch is tripped by the load block. This switch removes power to the motor and sets the brakes. This switch is reset manually.	
	The protective control system for load hang-up should consist of load cell systems in the drive train or motor-current-sensing devices or mechanical load-limiting devices.	Each hoist drive is programmed to only provide a margin of torque above what is required to lift the load, thereby limiting input energy into the system. Torque demand above this value trips the drive and sets the brake. Additionally, a load cell is installed in the hoist reeving. The load cell senses overloads that result from two-blocking or load hang-up. An overload de-energizes the hoist control and sets the holding brakes.	
	Location of the mechanical holding brakes and their controls should provide positive, reliable and capable means to stop and hold the hoisting drum.	Disc type high speed holding braking is provided on the high speed shafting to hold the load during normal operation. Redundancy in the high speed holding braking is not required as the drum emergency stop brake provides single-failure-proof braking for the design.	

SEC #	NUREG REQUIREMENT	LICENSEE COMPLIANCE	LICENSEE EXCEPTIONS
4.5 Design Against Two-Blocking (cont.)	This should include capability to withstand the maximum torque of the driving motor if a malfunction occurs and power to the driving motor cannot be shutoff.	The hoist drive train is designed to absorb the maximum torque of the motor as limited by the flux vector drive.	No exceptions noted by licensee
	The auxiliary hoist equipped with two independent travel-limit switches to prevent two-blocking.	Primary rotary limit switch on the drum shaft senses both the upper and lower positions of the load block travel. Hoist motion is stopped by de-energizing the hoist controls. Secondary lever operated limit switch is tripped by the load block. This switch removes power to the motor and sets the brakes.	
4.6 Lifting Devices	Lifting devices attached to the load block such as ….. designed with a dual or auxiliary device or combinations thereof. Each designed or selected to support a load of three times the load (static and dynamic) being handled without permanent deformation.	All lifting devices except the reactor head strong back satisfy the requirement of NUREG-0612, Section 5.1.6 and ANSI N14.6-1978. The reactor head strong back was reviewed and approved in the NRC safety evaluation dated June 21, 1983 for lifting the reactor head with the non-single-failure-proof crane. All new special lifting devices, such as those for lifting casks are designed and tested to the requirements of NUREG-0612, Section 5.1.6 and ANSI-N14.6-1978. Interfacing lift points are required to satisfy the criteria in NUREG-0612, Section 5.1.6(3).	Exception noted by licensee.
4.7 Wire Rope Protection	If side loads cannot be avoided, the reeving system should be equipped with a guard that would keep the wire rope properly located in the grooves on the drum.	In the event of an excessive off-center lift, the unbalanced load limits will sense this event. A flashing warning light, as well as stopped hoist motion, will occur. As an additional protection, the hoists are also equipped with drum rope level wind limit switches. Actuation of this limit will stop hoisting and will require a controlled key to be used to restart the hoist.	No exceptions noted by licensee
4.8 Machinery Alignment	The proper functioning of the hoisting machinery during load handling ensured by providing adequate support strength of the individual component parts and the welds or bolting that bind them together.	Component parts and the welds or bolting were designed in accordance with CMAA Specification #70. Deflection calculations were performed under load to confirm frame deflection would not affect machinery alignment.	No exceptions noted by licensee
	Where gear trains are interposed between the holding brakes and the hoisting drum, these gear trains should be single-failure-proof and should be of dual design.	The design does not employ gear trains between the holding brake and the hoisting drum. The single-failure-proof design includes an emergency stop disc caliper brake on the hoist drum.	

SEC #	NUREG REQUIREMENT	LICENSEE COMPLIANCE	LICENSEE EXCEPTIONS
4.9 Hoist Braking System	The holding brakes should be applied when power is off and should be automatically applied on overspeed to the full holding position if a malfunction occurs.	Drum overspeed can occur only if there has been a control malfunction or a mechanical failure in the drive train. The holding brakes in the hoisting system are applied when electric power is off or when a motor overspeed occurs. Sensing overload also sets the braking systems. The braking systems are fail-safe, i.e. automatically activated when electrical power is removed.	
	Each holding brake should have a torque rating not less than 125% of the full-load hoisting torque at the point of application.	Each holding brake has been designed with a minimum capacity of 150% of the torque developed during the hoisting operation at the point of brake application.	No exceptions noted by licensee.
	Minimum hoisting braking system should include one power control braking system (not mechanical or drag brake type)…..	The hoisting power control system utilizes a dynamic brake via the flux vector drive.	
	Minimum hoisting braking system should include ……. two holding brakes.	A disc type high speed holding braking is provided on the high speed shafting. The drum emergency stop brake cycles with the high speed holding brake providing the second holding brake.	
	Minimum number of braking systems that should be operable for emergency lowering after a single brake failure should be two holding brakes for stopping and controlling drum rotation.	Only the emergency drum brake system, having more thermal capability than two holding brakes combined, is operable following a drive train failure. Indication of drum lowering speed, which does not require power, is provided via battery. This system is capable of continuously lowering the rated load from the maximum hook height without exceeding the temperature limits of the brakes.	Exception noted by licensee.

SEC #	NUREG REQUIREMENT	LICENSEE COMPLIANCE	LICENSEE EXCEPTIONS
4.9 Hoist Braking System (cont.)	Holding brake system should be single-failure-proof; any component or gear train should be dual if interposed between the holding brakes and hoist drum.	The design does not employ gear trains between the holding brake and the hoisting drum. The single-failure-proof design includes an emergency stop disc caliper brake on the hoist drum. The hold brake systems are single-failure-proof.	No exceptions noted by licensee.
	Dynamic and static alignment of all hoisting machinery components ..... range of lifted loads ... positioned and anchored on the trolley platform.	Component parts and the welds or bolting were designed in accordance with CMAA Specification #70, including seismic design in accordance with ASME NOG-1 to assure machinery alignment during dynamic and static conditions.	
	Provisions for manual operation of the hoisting brakes during an emergency condition.	A manual control station, to safely lower the rated load without electrical power, is located on the trolley platform.	
	Adequate heat dissipation from the brake.... preclude damage from excessive lowering velocity.	Drum emergency stop brake system is capable of continuous lowering of the rated load, at minimum speed, without exceeding the brake temperature limits. The brake disc temperature can easily be measured.	
	Portable instruments to indicate the lowering speed during emergency operations.	Indication of drum lowering speed is provided with battery backup.	
	Malfunction of a holding brake were to occur and emergency lowering of the load ... restore brake to working condition before any lowering is started.	Only the drum emergency stop brake is required to safely control the load during emergency lowering operations. Should a malfunction of this brake occur, it can be restored to operation before lowering is started.	

SEC #	NUREG REQUIREMENT	LICENSEE COMPLIANCE	LICENSEE EXCEPTIONS
5.1 Braking Capacity	Bridge and trolley drives provided with control and holding braking systems … applied when power off.	Bridge and trolley AC drive motors provide control braking, via the frequency drive's dynamic braking feature. Holding brakes located on each motor are automatically applied when the power is off.	No exceptions noted by licensee.
	Bridge and trolley drives provided with control and holding braking systems … applied on overspeed.	The use of AC squirrel cage motors inherently provides overspeed protection as the design of this motor type limits the overspeed to 5% greater than synchronous speed of the motor, which is typically 10% greater than the maximum design speed. If this speed is reached, the flux vector drive will cause the drive to trip, setting the brakes.	
	Bridge and trolley drives provided with control and holding braking systems … applied on overload.	Bridge and trolley drive brakes will set automatically in the event of an overload. This is accomplished via the flux vector drive sensing the overload causing the drive to trip and setting the brakes.	
	Bridge and trolley drives provided with control and holding braking systems … applied on failure in the drive system.	Bridge and trolley drive brakes will set automatically in the event of a drive failure.	
	Maximum torque capability of the driving motor and gear reducer … not exceed the capability of the gear train and brakes to stop the trolley and bridge from the maximum speed with DRL attached.	The maximum torque capacity of the driving motor and gear reducer for both motions is selected to not exceed the capacity of the gear train and brakes to stop either of the motions from the maximum speed with the design rated load attached.	
	Incremental or fractional inch movements should be provided by such items as variable speed controls or inching motor drives.	The crane is provided with variable frequency speed drives.	
	Control and holding brakes rated at 100% of maximum torque that can be developed at the point of application.	Bridge and trolley control and holding brakes are capable of applying a counter torque that is 100% of maximum drive torque that can be developed at the point of application.	
	If two mechanical brakes, one for control and one for holding …. adjusted with one brake leading …	Only one mechanical brake is provided for the bridge and trolley drives.	

SEC #	NUREG REQUIREMENT	LICENSEE COMPLIANCE	LICENSEE EXCEPTIONS
5.1 Braking Capacity (cont.)	Brakes mechanically tripped to the "on" or "holding" position in the event of power supply malfunction or an overspeed condition.	The brakes are spring-set electrically-released holding brakes that are automatically applied when power is interrupted. If an overspeed condition exists, the flux vector drive will sense it, trip the drive and apply the brakes.	No exceptions noted by licensee.
	Provisions made for manual emergency operation of the brakes.	Bridge and trolley brakes include a manual release lever to permit manual emergency operation.	
	Holding brake should be designed so that it cannot be used as a foot-operated slowdown brake.	Design of the bridge and trolley holding brakes is such that they cannot be used as a foot-operated slowdown brake.	
	Drag brakes should not be used.	Drag brakes are not used for the trolley or bridge drives.	
	Opposite driven wheels on bridge or trolley ..... matched and identical diameters.	The tread diameter of the four trolley wheels is 24 inches. The opposite drive wheels were inspected and found to be within the tolerance of ± 0.010 inch. The bridge is tracking properly on the runway, which indicates that the bridge drive wheels have matched and identical diameters.	
	Trolley and bridge slow speed limits of CMAA Specification #70 for handling MCLs.	The bridge and trolley speeds are in compliance with the slow operating speeds for bridge and trolley in CMAA Specification #70 (1975). The trolley speed is 20 fpm and the bridge speed is 40 fpm.	
5.2 Safety Stops	Mechanical limiting devices provided to control or prevent over travel.	Mechanical end stops are installed on the bridge and trolley runways to prevent over travel.	No exceptions noted by licensee.
	Electrical limiting devices provided to control or prevent over travel and overspeed of the trolley and bridge.	Travel limit switches are provided to prevent over travel. The AC squirrel cage motors in combination with the flux vector drives prevent overspeed of the trolley and bridge.	
	Buffers for bridge and trolley travel should be included at the end of the rails.	Compression bumpers, attached to the trolley and bridge, are included for buffering contact with the end travel stops.	

SEC #	NUREG REQUIREMENT	LICENSEE COMPLIANCE	LICENSEE EXCEPTIONS
5.2 Safety Stops (cont.)	Safety devices such as limit-type switches provided for malfunction ... should be in addition to and separate from the limiting means or control devices provided for operation.	Trolley and bridge limit switches are provided as safety devices, in addition to the end stops and bumpers. These switches are not for control of the bridge and trolley during normal crane operations.	No exceptions noted by licensee.
6.1 Driver Selection	Horsepower rating of the hoist driving motor ..... matched with the calculated ..... design load and acceleration to the design hoisting speed.	The design of the individual components of the hoisting system is based on the maximum torque capability (when hoisting DRL, at maximum acceleration and rated speed) of the hoist motor. The hoisting acceleration rate is controlled via the flux vector drive. Control of acceleration limits strain on the machinery and load-carrying devices.	No exceptions noted by licensee.
	To preclude excessive motor torque, the maximum torque capability of the electric motor drive for hoisting should not exceed the rating or capability of the individual components of the hoisting system required to hoist the MCL at the maximum design hoist speed. Overpower and overspeed conditions should be considered an operating hazard.	The maximum motor torque is limited by the electrical drive, preventing motor torque build-up. This torque is less than the capacity of the individual hoist components ensuring the motor does not overpower the hoist components while hoisting the MCL at the maximum hoist speed. Each hoist has overspeed switches, which de-energize the drive and actuate the holding brakes.	
	Controls capable of stopping the hoisting movement ..... maximum hoisting movement of 3 inches an acceptable stopping distance.	Hoisting motion can be stopped within 3 inches with maximum critical load at maximum design hoist speed. This is achieved with either or both braking systems operating.	
	Prudent to include safety devices in the control system ..... to ensure the controls will return to or maintain a safe holding position in case of malfunction. Electrical circuit design	The hoists are designed to stop and safely hold the load following any one of the following fault conditions - overload, overspeed, wire rope mis-spooling, unbalanced load and overtravel. Electrical design includes the effects of overvoltage, undervoltage, phase reversal or loss of phasing in the hoist power supply. Safety devices in the control system accomplish the above.	

SEC #	NUREG REQUIREMENT	LICENSEE COMPLIANCE	LICENSEE EXCEPTIONS
6.1 Driver Selection (cont.)	For elaborate control systems, radio control ..... an "emergency stop button" placed at ground level to remove power from the crane independent of the crane controls.	An emergency stop button is provided in the cab while an emergency stop selector switch is provided on the radio control transmitter either of which will remove power from the crane and set all brakes. Additionally, a manual disconnect switch is provided on the refuel floor level to provide an additional means to independently disconnect the power from the crane.	No exceptions noted by licensee.
	For cranes with a DRL rating much higher than the MCL rating ... electrical or mechanical resetting of the overload sensing device, away from the operator cab and included in an administrative program.	The main hoist of the crane is not operated above its MCL rating of 105 tons. In addition, the auxiliary hoist is not operated above its MCL of 10 tons. Therefore, it is unnecessary to reset overload sensing devices. Resetting overload sensing devices cannot be accomplished from the operator cab. Although the trolley DRL is above the crane MCL for the main hoist, the trolley controls are only configured to the MCL. Lifting at the DRL of the main hoist trolley cannot be accomplished without modification.	
6.2 Driver Control Systems	Control system(s) provided should include consideration of ..... the effects of the inertia of the rotating hoisting machinery, ... and drum.	The effects of the inertia of the rotating hoisting machinery such as motor armature, shafting and coupling, gear reducer, and drum were considered in the design of the crane's control system.	No exceptions noted by licensee.
	Control system provided should include consideration of the hoisting (raising and lowering) of all loads, including the rated load.	Hoisting (raising and lowering) of all loads, including the rated load, was considered in the design of the control system for the single-failure-proof hoists, trolley and bridge.	
	Control system adaptable to include interlocks that will prevent trolley and bridge movements while spent fuel elements are being lifted free of a reactor vessel or storage rack.	This design feature has been provided in the reactor building crane control system.	

SEC #	NUREG REQUIREMENT	LICENSEE COMPLIANCE	LICENSEE EXCEPTIONS
6.3 Malfunction Protection	Means provided in the motor control circuits to sense and respond to such items as excessive electric current, excessive motor temperature, overspeed, overload, and over travel.	The design employs sensors in the motor control circuits to detect and respond to excessive electrical current, excessive motor temperature via Klixon switches embedded in the motor windings, over travel via the hoisting limit switches, overspeed via the drum actuated drum overspeed limit and overload via the weight sensing switch.	No exceptions noted by licensee.
	Controls provided to absorb the kinetic energy of the rotating machinery and stop .... if one rope or one of the reeving systems should fail.	The electrical dynamic brakes are designed to absorb the kinetic energy for the rotating machinery and stop the hoisting motion should one rope fail. These forces are also designed to be absorbed via the mechanical holding brake systems. The kinetic energy released during rope failure is absorbed by the equalizer system.	
	Controls provided to absorb the kinetic energy of the rotating machinery and stop ..... if overloading or an overspeed condition should occur.	The electrical dynamic brakes are designed to absorb the kinetic energy for the rotating machinery and stop the hoisting motion should an overspeed or overload condition occur. These forces are also designed to be absorbed via the mechanical holding brake systems.	
6.4 Slow Speed Drives	Increment drives for hoisting may be provided by stepless controls or inching motor drive.	The lowest speed for hoisting is 0.25 fpm, and is variable up to a maximum of 5 fpm, with stepless flux vector variable frequency drives. An inching motor is not provided.	No exceptions noted by licensee.
	If jogging or plugging is to be used, the control circuit should include features to prevent abrupt change in motion.	The drive accomplishes safe plugging by first electrically and then mechanically stopping the hoist before reversing. The damage caused by jogging is also eliminated as the drive accelerates and then decelerates the system to zero speed before an additional jog is allowed. The drive is programmed to prevent abrupt changes in motion.	
	Drift point in the electric power system for bridge or trolley movement should be provided only for the lowest speeds.	Drift points are not provided in the electrical power system for bridge or trolley motion.	

SEC #	NUREG REQUIREMENT	LICENSEE COMPLIANCE	LICENSEE EXCEPTIONS
6.5 Safety Devices	Safety devices such as limit-type switches provided for malfunction, inadvertent operator action, or failure should be in addition to and separate from the limiting means or control devices provided for operation.	Trolley and bridge limit switches are provided as safety devices, in addition to the end stops and bumpers. The switches are not intended for control of the bridge and trolley during normal crane operations. Hoist limit switches are provided as safety devices and are not intended to be tripped during normal hoisting operations.	No exceptions noted by licensee.
6.6 Control Stations	The complete operating control system and provisions for emergency controls for the overhead crane handling system should preferably be located in a cab on the bridge.	The primary crane controls, including emergency stop switch, are located in the cab attached to the bridge.	No exceptions noted by licensee.
	When additional operator stations are considered, they should have control systems similar to the main station.	The additional operator stations (radio control) are similar to that which is provided in the cab. These additional operator stations are provided in accordance with CMAA Specification #70, Figure 5.8.1.c.	
	Manual controls for hoisting and trolley movement provided on the trolley, and for the bridge provided on the bridge.	Manual controls for the hoist and trolley are accessible on the trolley. Manual controls for the bridge are accessible on the bridge.	
	Remote control for any of these motions should be identical to those on the bridge cab control panel.	The control functions on the radio transmitter are identical to those on the bridge cab control panel.	
	Cranes that use more than one control station	An electrical interlock is provided between the cab and radio control. Three radio transmitters are also provided. They are activated electronically and interlocked on a first come, first served basis.	
	In the design of control systems, provision for and locations of devices for control during emergency conditions should be provided.	Manual control of the hoists is possible on the trolley. Manual movement of the bridge and trolley is possible from the bridge service platform. Emergency stops are available in the cab and each radio controller. A manual disconnect switch is available on the refuel floor, which removes power to the crane.	

SEC #	NUREG REQUIREMENT	LICENSEE COMPLIANCE	LICENSEE EXCEPTIONS
7.1 General	Installation instructions should be provided by the manufacturer.	Installation instructions were provided.	No exceptions noted by licensee.
	Include a full explanation of the crane handling system, its controls and limitations for the system.	The operation and maintenance manual includes a full explanation of the crane handling system, its controls and the limitations for the system.	
	Instructions should cover .... Requirements for installation, testing, and preparations for operation.	Instructions were provided for installation, testing, and preparations for operation.	
7.2 Construction and Operating Periods	Is the permanent plant crane to be used for construction?	The crane was installed late during construction. Therefore, it is believed to not have been used for major construction activities.	No exceptions noted by licensee.
	During and after installation of the crane, the proper assembly of electrical and structural components should be verified. The integrity of all control, operating and safety systems should be verified as to satisfaction of installation and design requirement.	After functional and load testing at the manufacturer's test facility, the trolley was shipped to Oyster Creek fully assembled. After installation at Oyster Creek, the crane was subjected to the requirements of ASME NOG 7420, "Pre-operational Testing and Inspection" and NOG 7421, "No Load Test." These tests verified the proper assembly of electrical and structural components and the integrity of all control, operating and safety systems.	
8.1 General	A complete check .... Crane's mechanical and electrical systems to verify the proper installation and to prepare the crane for testing.	In order to verify the crane's mechanical and electrical systems are properly installed, the requirements of NOG 7500 "Qualification for Permanent Plant Service", as they apply to the new trolley, were used. These requirements include Section 7520 "Inspection Prior to Performance Testing", NOG 7521.2 "Mechanical Inspection", NOG 7521.3 "Electrical Inspection (Visual) While Crane is Immobile", and NOG 7530 which invokes the requirements of NOG 7420 "Pre-operational Testing and Inspection" and NOG 7421 "No Load Test".	No exceptions noted by licensee.

SEC #	NUREG REQUIREMENT	LICENSEE COMPLIANCE	LICENSEE EXCEPTIONS
8.1 General (Cont.)	Information concerning proof testing on components and subsystems ..... performed at the manufacturer's plant ..... available for the checking and testing performed at the place of installation.	Information concerning proof testing on component and subsystems that was required and performed at manufacturer's plant is available at Oyster Creek.	No exceptions noted by licensee.
8.2 Static and Dynamic Load Tests	The crane system should be static load tested at 125% of MCL, ... including all positions generating maximum strain in the bridge and trolley structures and positions recommended by the designer and manufacturer.	The trolley was tested at 125% of the DRL at the manufacturer's test facility. Performance testing, manual lowering of the hoists, and manual positioning of the trolley at 100% of the MCL was also verified at the test facility. The 125% load test did not include in-plant maximum strain positions. The crane was not load tested at Oyster Creek as the replacement trolley is of a lighter design, which does not impose any new loadings on the crane bridge or building structure. (Refer to AmerGen response to NRC Introduction Question 1.)	Exceptions noted by licensee.
	After making required adjustments resulting from the 125% static load test, 100% MCL performance test for all speeds and motions for which the system is designed. All safety and limiting control devices will be verified.	The adjusted trolley and hoists were given full performance tests with 100% of the MCL for all speeds and motions for which the system was designed at the manufacturer's test facility. Tests included verification of all safety and limiting control devices. The adjusted and verified trolley from the test facility was shipped in whole and installed on the crane bridge at Oyster Creek. The crane was not load tested at Oyster Creek as the replacement trolley is of a lighter design, which will not impose any new loadings on the crane bridge and building structure. (Refer to AmerGen response to NRC Introduction Question 1.)	
	Emergency manual lowering of the load and manual movement of the bridge and trolley should be tested with the MCL attached.	Emergency manual operation of the hoist and trolley were performed with the MCL attached. Manual movement of the bridge with the MCL attached was not performed after installation of the upgraded trolley.	

SEC #	NUREG REQUIREMENT	LICENSEE COMPLIANCE	LICENSEE EXCEPTIONS
8.3 Two-Block Test	When equipped with an energy-controlling device between load and head blocks the complete hoisting machinery is allowed to two-block (load block limit and safety devices bypassed). Test, at slow speed and no load, to provide assurance of design, controls and overload protective devices. Demonstrate that the maximum torque developed by the driving system, including inertia of the rotating parts at the overtorque condition, will be absorbed or controlled.	A two-block test is not required since the design uses the NUREG-0554 alternative redundant upper limit switch design.	No exceptions noted by licensee.
	The complete hoisting machinery tested for ability to sustain a load hangup condition ... load block attaching points are secure to a fixed anchor or an excessive load. Crane manufacturer ..... ensure proper functioning of protective overload devices.	The overload limit switch was tested under load and calibrated to trip at 110% of MCL.	
8.4 Operational Test	Operational tests of crane systems performed to verify the proper functioning of limit switches and other safety devices and the ability to perform as designed.	The crane system was tested to verify the proper functioning of all limit switches and other safety devices and the ability to perform as designed.	No exceptions noted by licensee.
	Special arrangements may have to be made to test overload and overspeed sensing devices.	The hoist overload sensor was tested during the 125% load test. The overspeed sensing device was tested by reprogramming the flux vector variable speed drive.	
8.5 Maintenance	With good maintenance practice, degradation is not expected to exceed 15% of the design load rating, and periodic inspection coupled with a maintenance program should ensure that the crane is restored to the design condition if such degradation is found.	Daily inspection of the crane is performed when the crane is in use in accordance with the crane operating procedure. Preventive maintenance (PM) tasks are established for inspection, test and maintenance of the crane. PM ensures that the crane is maintained to the design condition. If degradation of the handling system is determined, it will be handled in accordance with plant procedures.	No exceptions noted by licensee.
	The MCL rating of the crane should be established as the rated load capacity, and the design rating for the degradable portion of the handling system should be identified to obtain the margin available.	At least a 15% factor above the DRL has been included for the mechanical components subject to wear.	
	The MCL should be plainly marked on each side of the crane for each hoisting unit.	The MCL rating (105/10 ton) is marked on each side of the crane bridge and each lower block.	

SEC #	NUREG REQUIREMENT	LICENSEE COMPLIANCE	LICENSEE EXCEPTIONS
9 Operating Manual	Crane designer and manufacturer should provide a manual of information and procedures for use in checking, testing and operating the crane. Manual to describe a preventive maintenance program based on the approved test results and information obtained during testing. Include such items as …….. operating requirements for all travel movements …. clearly defined……..	The crane designer and manufacturer has provided a manual of information to use for checking, testing, and operating the crane. The manual also describes a preventive maintenance program based upon the requirements of OSHA 1910.179 and ASME NOG-1. Information obtained during crane testing is also provided in the manual. The preventive maintenance program provides such items as servicing, repair, and replacement requirements. Additionally, visual examinations, equipment diagnostics, and nondestructive examinations are described in the manual. The operating portion of the manual defines the vertical and horizontal movements of the crane.	No exceptions noted by licensee.
	The designer should establish the MCL rating and the margin for degradation of wear susceptible component parts.	The designer established the MCL rating and margin for degradation of wear susceptible parts.	
10 Quality Assurance	A quality assurance program should be established to include the recommendations of this report for the design, fabrication, installation, testing and operation of crane handling systems for safe handling of critical loads.	AmerGen developed a project quality plan to establish the requirements and responsibilities for control of the design, fabrication, installation and testing of the replacement crane. The Oyster Creek 10 CFR 50, Appendix B quality assurance program addresses these requirements as well as testing and operation at the site to ensure the safe handling of critical loads.	No exceptions noted by licensee.
	Applicable procurement documents should require the crane manufacturer to provide a quality assurance program consistent with the pertinent provisions of Regulatory Guide 1.28, to the extent necessary.	The requirements of the project quality plan and NUREG-0554 were invoked in the procurement documents. The manufacturer was required to comply with the requirements of 10 CFR 50, Appendix B.	
	Program should address all recommendations in this report.	All activities pertaining to the design, fabrication, installation, testing, operation and maintenance of the upgraded reactor building crane have been performed in accordance with the crane manufacturer's and/or the Oyster Creek quality assurance programs.	
	Include qualification requirements for crane operators.	Crane operator qualification and training is conducted under the Oyster Creek Quality Assurance Program.	

QUALITY MATRIX
REQUIRED INSPECTIONS OR TESTS
ATTACHMENT A

ITEMS	TESTS									
	CERT. MATL. TEST REP.	CERT. OF CONF. FROM ITEM MFGR.	RT OR UT OF BUTT WELDS	MT OR PT OF COMPLETED WELDS	UT BASE MATL.	MT OR PT OF SURFACE	IMPACT TEST Note 1	PROOF LOAD TEST (Including Dimensional)	BREAKING STRENGTH TEST	WELD FILLER MATL C.C. TYP. VALUE
Hook	X	X			X	X		X		
Hook Nut or Attachment Device	X	X			X	X		X		
Trunnion or Cross Head	X	X			X	X				
Load Block Load Structures	X	X					X			
Load Block Structural Welds				X						X
Load Bock - Sheave Pin	X	X			X	X				
Wire Rope		X							X	
Hoist Drum	X	X								
Hoist Drum Shell and Hub Welds			X	X						X
Upper Block Sheave Pin	X	X			X	X				
Upper Block Load Structure	X	X					X			
Upper Block Structural Welds				X						X
Sheaves		X								
Trolley Load Girt Structure	X	X					X			
Trolley Girt - Structural Welds [Note 2]				X						X
Fastener Material for Critical Structural Interconnection [Note 3]	X	X					X			
Trolley Seismic Restraints - Structural	X	X								
Trolley Seismic Restraints - Structural Welds										X
Wire Rope Eyes and Sockets [Note 3]								X		

Notes:
1. Material thickness 5/8" or less in thickness shall be exempt from testing
2. 1/8" throat thickness and greater, 100% weld inspection.
3. Exempt from impact test provided bolt nominal diameter is 1" or less.
4. Proof tested to 200% of the rated capacity of the wire rope as demonstrated by test samples.

ATTACHMENT "B"

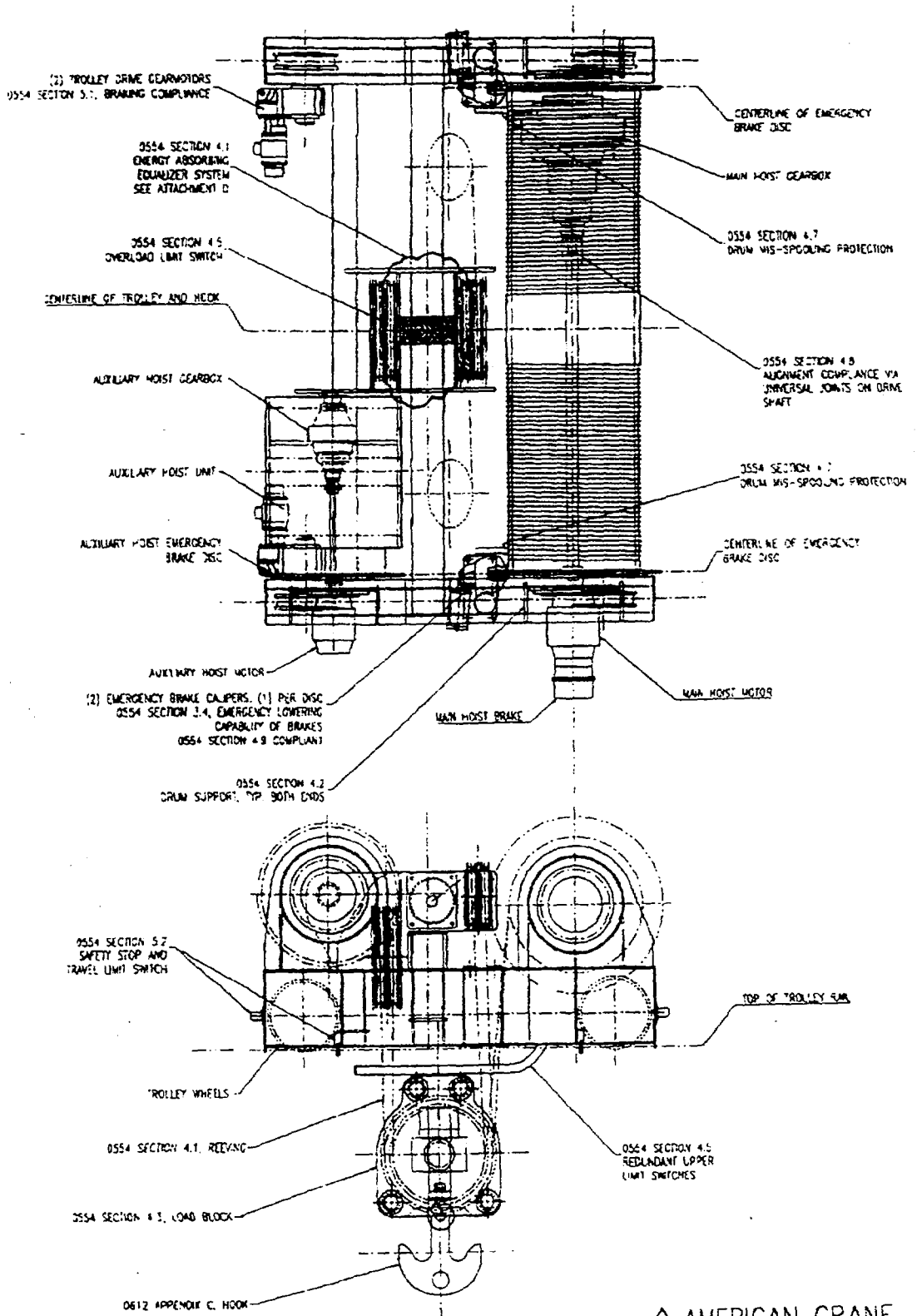

THIS DRAWING AND ALL DATA CONTAINED HEREIN IS THE PROPERTY OF AMERICAN CRANE & EQUIPMENT CORPORATION AND SHALL NOT BE REPRODUCED OR COPIED IN WHOLE OR IN PART, LOANED, SOLD, OR OTHERWISE COMMUNICATED OR TRANSFERRED TO ANY THIRD PARTY WITHOUT PRIOR WRITTEN APPROVAL OF AMERICAN CRANE AND EQUIPMENT CORPORATION.

ACECO
AMERICAN CRANE
& EQUIPMENT CORPORATION
DOUGLASSVILLE, PA 19518 U.S.A.
PHONE: 610-385-6051 FAX: 610-385-3191

ATTACHMENT "C"

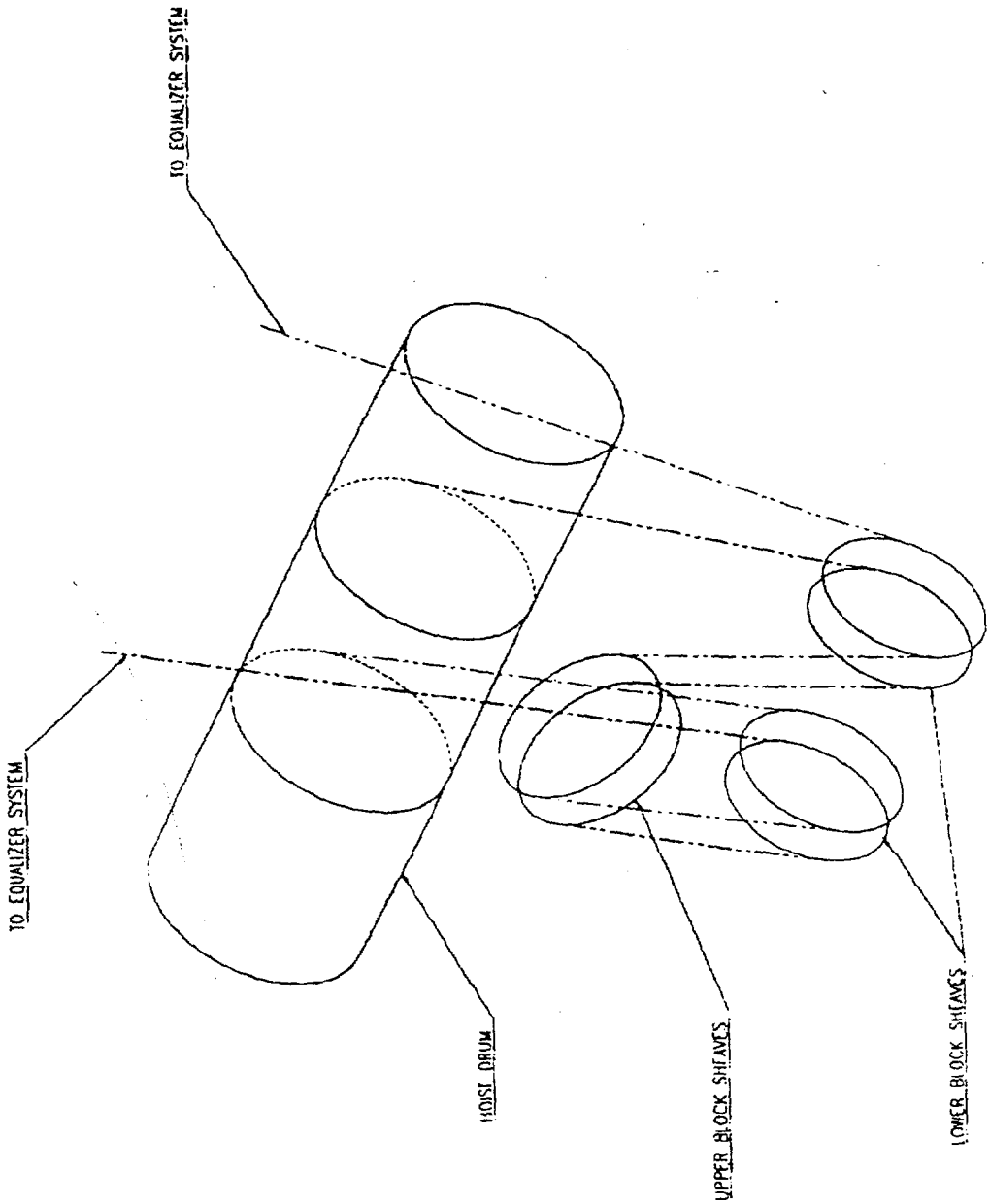

AMERICAN CRANE
& EQUIPMENT CORPORATION
DOYLESTOWN, PA 18918 U.S.A.
PHONE: 610-385-6061 FAX: 610-385-3191

THIS DRAWING AND ALL DATA CONTAINED HEREIN IS THE PROPERTY OF AMERICAN CRANE & EQUIPMENT CORPORATION AND SHALL NOT BE REPRODUCED OR COPIED IN WHOLE OR IN PART, LOANED, SOLD OR OTHERWISE COMMUNICATED OR TRANSFERRED TO ANY THIRD PARTY WITHOUT PRIOR WRITTEN APPROVAL OF AMERICAN CRANE AND EQUIPMENT CORPORATION

ATTACHMENT "D"

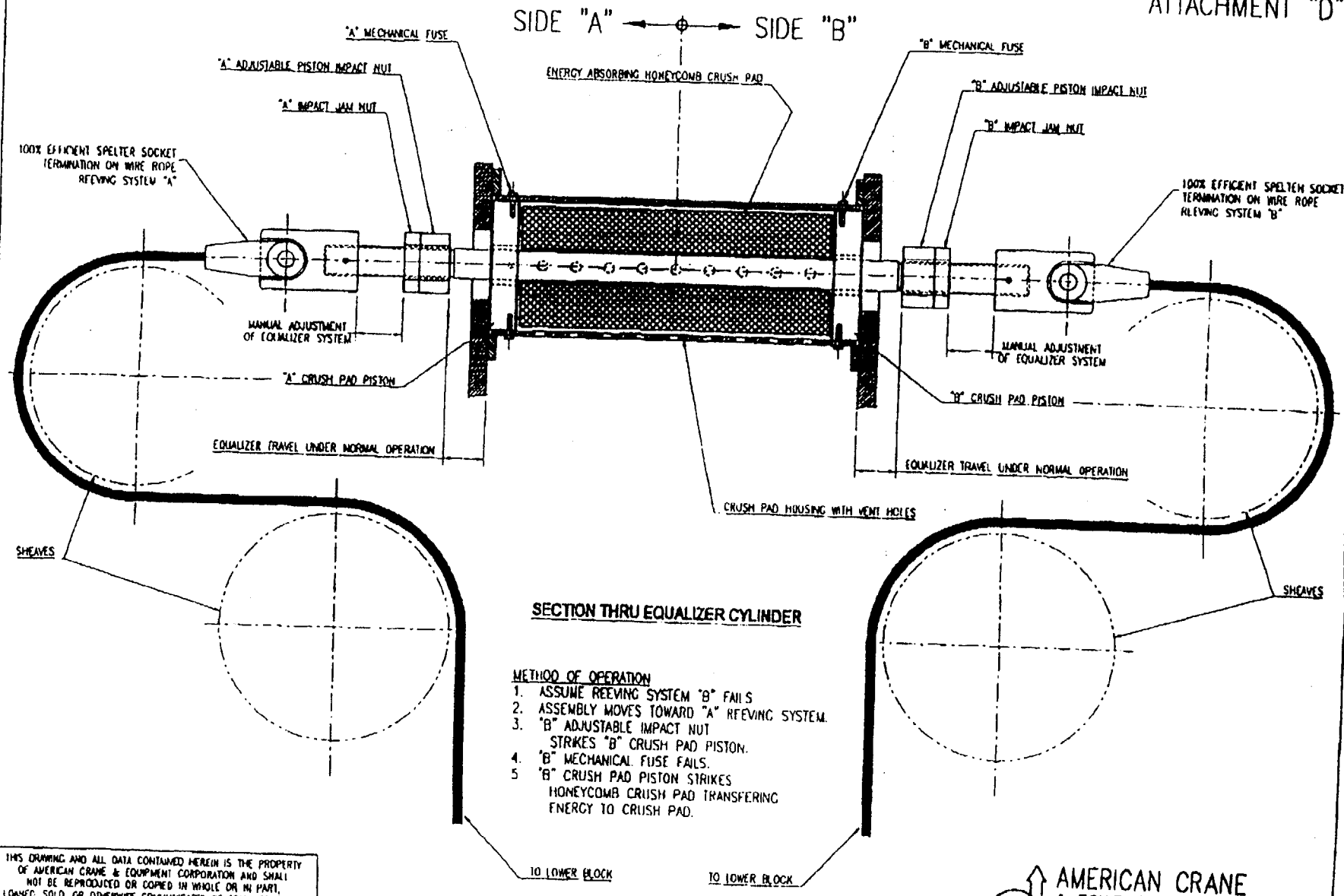

SECTION THRU EQUALIZER CYLINDER

METHOD OF OPERATION

1. ASSUME REEVING SYSTEM "B" FAILS
2. ASSEMBLY MOVES TOWARD "A" REEVING SYSTEM.
3. "B" ADJUSTABLE IMPACT NUT STRIKES "B" CRUSH PAD PISTON.
4. "B" MECHANICAL FUSE FAILS.
5. "B" CRUSH PAD PISTON STRIKES HONEYCOMB CRUSH PAD TRANSFERING ENERGY TO CRUSH PAD.

THIS DRAWING AND ALL DATA CONTAINED HEREIN IS THE PROPERTY OF AMERICAN CRANE & EQUIPMENT CORPORATION AND SHALL NOT BE REPRODUCED OR COPIED IN WHOLE OR IN PART, LOANED, SOLD OR OTHERWISE COMMUNICATED OR TRANSFERRED TO ANY THIRD PARTY WITHOUT PRIOR WRITTEN APPROVAL OF AMERICAN CRANE AND EQUIPMENT CORPORATION

ACECO
AMERICAN CRANE & EQUIPMENT CORPORATION
DOUGLASSVILLE, PA. 19518 U.S.A.
PHONE: 610-385-6061 FAX: 610-385-3191

ATTACHMENT "E"

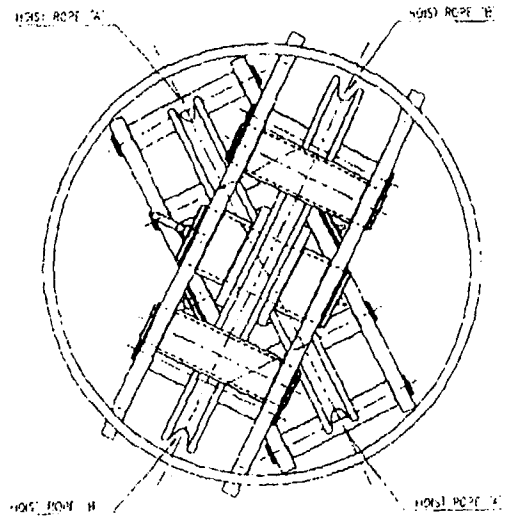

LOWER BLOCK PLAN VIEW

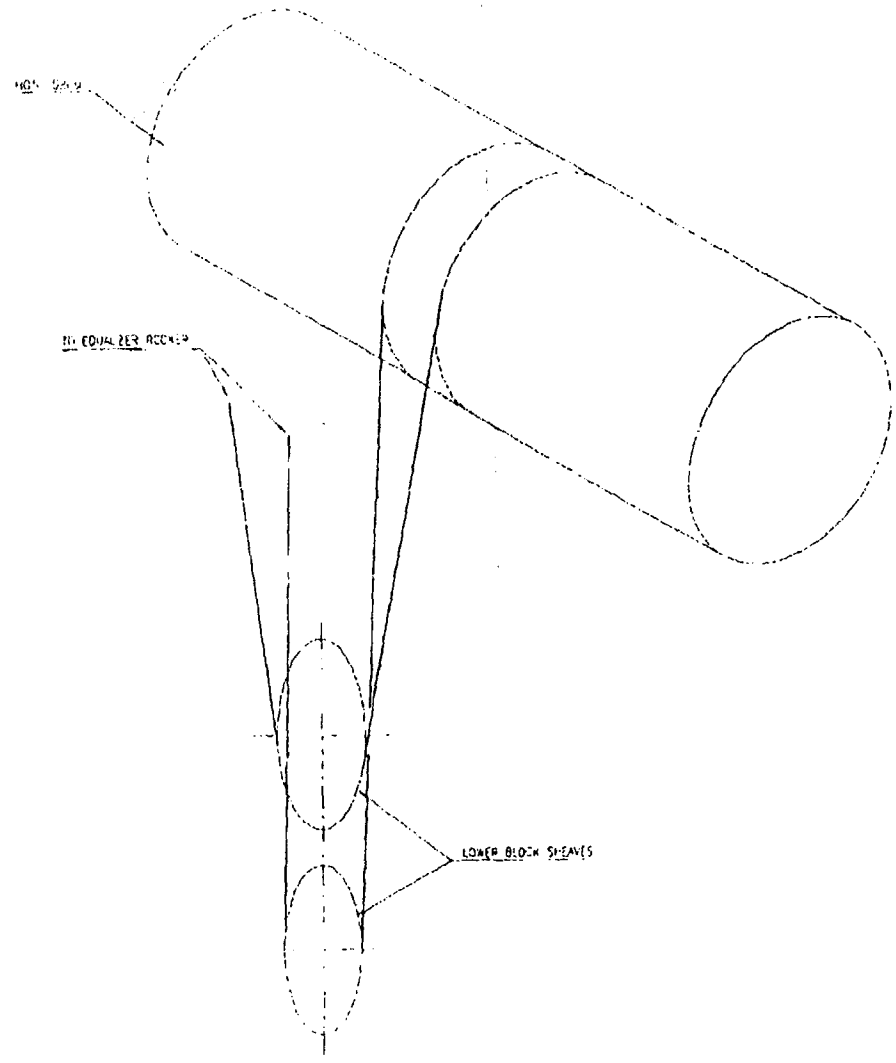

AUX. HOIST REEVING

THIS DRAWING AND ALL DATA CONTAINED HEREON IS THE PROPERTY OF AMERICAN CRANE & EQUIPMENT CORPORATION AND SHALL NOT BE REPRODUCED OR COPIED IN WHOLE OR IN PART, LENT, SOLD OR OTHERWISE COMMUNICATED OR TRANSFERRED TO ANY THIRD PARTY WITHOUT PRIOR WRITTEN APPROVAL OF AMERICAN CRANE AND EQUIPMENT CORPORATION

ACECO
AMERICAN CRANE
& EQUIPMENT CORPORATION
DOUGLASSVILLE, PA 19518 USA
PHONE 610 385-6301 FAX 610 385 3191

ATTACHMENT "F"

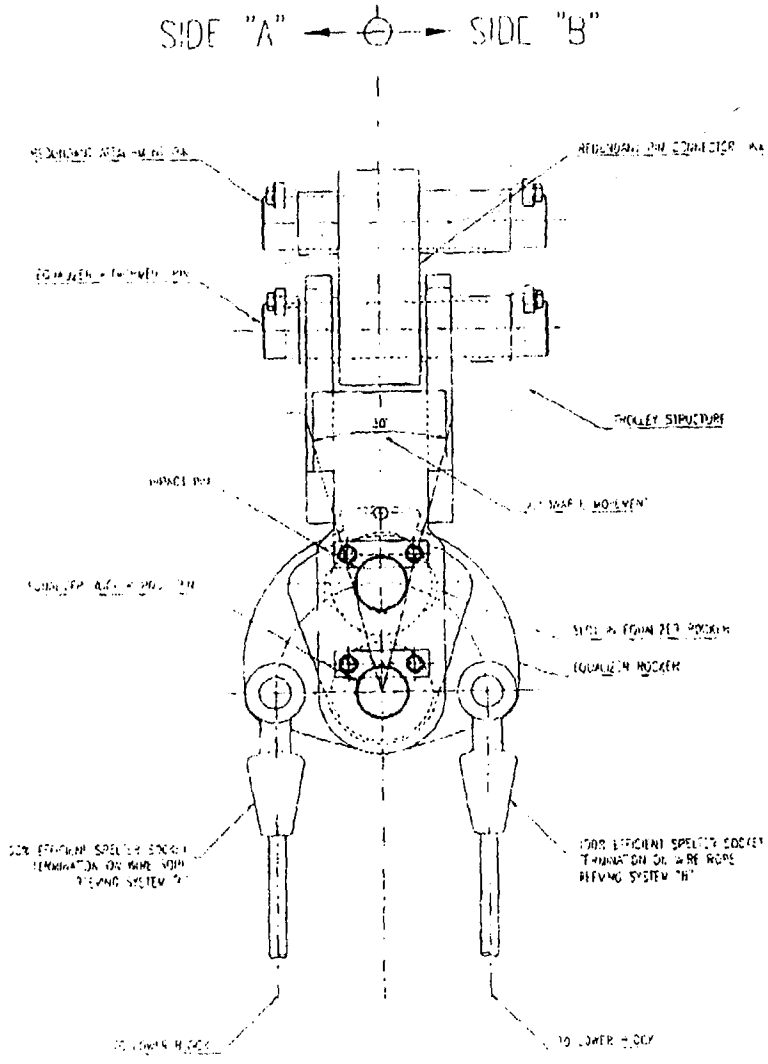

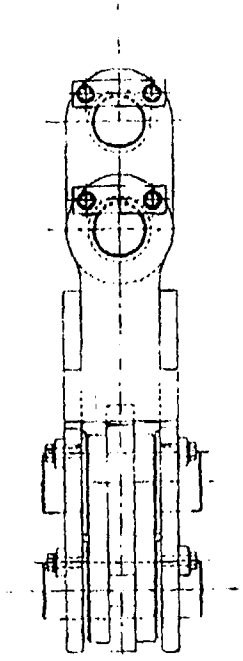

AUX. HOIST EQUALIZER

ACECO
AMERICAN CRANE
& EQUIPMENT CORPORATION
DOUGLASSVILLE, PA 19518 U.S.A.
PHONE: 610-385-6061 FAX: 610-385-3191

Reactor Building Superstructure Analysis

Purpose

The purpose of this analysis was to qualify the Oyster Creek Generating Station (OCGS) reactor building superstructure for increased loading due to an upgrade to a single-failure proof 105 ton capacity crane. The qualification was for normal operating plus seismic loads.

The upgrade consists of a complete replacement of the trolley. Qualification of the trolley, bridge girders and end trucks was done separately.

Accident pressure, temperature, extreme wind and extreme snow loading were not part of this analysis. Accident pressure and temperature are not significant for the reactor building superstructure. Extreme wind and snow loadings are not coincident with seismic loads. Roof dead load included allowance for normal winter snow load.

Analysis

Computer Program

SAP2000 Plus Version 7.21 was used. It is a public domain structural analysis code in wide use, based on SAP IV and developed by Computers and Structures, Inc. It does static, modal and response spectrum analysis, and it has complete AISC code check capability. The program is accepted under the EQE Quality Assurance Program for use in nuclear safety-related calculations. EQE benchmarked a set of verification problems against the same set of problems solved via another acceptable method. The benchmark problems covered all program features used in this analysis.

Finite Element Model

The finite element model of the reactor building superstructure and crane is shown in Figure 1. All of the elements are modeled as linear elastic beam elements. There are no nonlinear materials or element types. Two models were developed and used, one for each of the two most critical crane and trolley positions.

The following elements were included.

- Roof Trusses

  The roof trusses, which span the short (transverse) direction above the operating floor, are modeled along with the longitudinal framing and the horizontal cross-bracing.

- Building Columns

  The building columns around the perimeter of the operating floor are modeled. The building columns, which also serve as the crane columns, have different sections above and below the crane rails. The transition detail for the intersection of the crane rail support beam and the upper and lower column sections is shown in Figure 2. The horizontal purlins holding the building siding are also modeled as is the column cross-bracing.

- Crane

  The crane submodel is shown in Figure 3. The model is derived from the detailed model used separately to qualify the crane. The model represents the mass and stiffness of the trolley, crane girders and end trucks. Figures 4 and 5 are side and end views of the crane showing the elements used in the model.

- Crane and Trolley Wheels

  The crane end truck and trolley wheels were modeled with vertical rigid beam elements as shown in Figures 4 and 5. The elements were pinned at the connection with the rail.

- Crane Load

  The 105 ton crane live load is included in the mass of the trolley. However, it is acting only in the vertical direction. The qualification analysis for the crane showed that horizontal seismic forces from the hook load are negligible. Figure 6 shows the distribution of the crane loads on the crane model.

Crane Positions

The crane positions used in the analysis were based on the results of an earlier study of the reactor building superstructure (EQE Report, "Seismic Study of Reactor Building Crane Runway at Oyster Creek Nuclear Generating Station," August, 1996.) During this study a series of preliminary analyses were performed to determine the most critical location of the crane and trolley. Finite element models, similar to the one shown in Figure 1, were developed with the trolley at the end of the bridge span, at the quarter-span and at the mid-span positions. Models were also developed with the crane at various positions on the runway girders. For each location of the crane and each location of the trolley, a different model was developed and analyzed. The positions are described in Table 4-1 from the study report, which is shown below.

Table 4-1
STUDY CASES

Study Case	Crane Position	Trolley Position	Payload
1	centered on column line r4	mid-span of the bridge girders	100 tons
2	centered on column line r4	1/4 span of the bridge girders	100 tons
3	centered on column line r4	end of the bridge girders	100 tons
4	centered on column line r2	mid-span of the bridge girders	100 tons
5	centered on column line r2	1/4 span of the bridge girders	100 tons
6	centered on column line r2	end of the bridge girders	100 tons
7	centered on column line r3	mid-span of the bridge girders	100 tons
8	centered on column line r3	1/4 span of the bridge girders	100 tons
9	centered on column line r3	end of the bridge girders	100 tons
10	one wheel midway between r1 and r2	mid-span of the bridge girders	100 tons
11	one wheel midway between r1 and r2	1/4 span of the bridge girders	100 tons
12	one wheel midway between r1 and r2	end of the bridge girders	100 tons
13	one wheel midway between r2 and r3	1/4 span of the bridge girders	100 tons

The results of the study showed that Cases 11 and 12 had the highest demand to capacity ratios for crane runway girders. For that reason, those two positions were considered in this analysis. One model was created and analyzed for each position. The results for both models were checked against the acceptance criteria.

Dead and Live Load Analysis

The design roof load is 20 psf. This is distributed over the joints of the top chords of the roof trusses. The dead load of the built up roofing materials is 13 psf. Thus, there is 7 psf to account for possible snow accumulation. The weight of secondary roofing members was added to the roof load.

The design load of the building siding is 10 psf. This plus the weight of the secondary framing members was distributed to the column joints.

The dead load of the main building members included in the model was calculated and distributed by the computer program.

The dead weight of the crane was distributed as shown on Figure 6. The 105 ton live load on the hook was added to the trolley weight for the vertical direction. Crane impact loads for starting and stopping of the crane motors are short duration transient load, and they are not considered to be coincident with the maximum earthquake loads in the steel structure.

A static analysis was performed to calculate joint displacements and element stresses. Load factors for dead and live load were unity.

Seismic Analysis

The seismic stresses in the building elements were calculated by a linear elastic response spectrum analysis.

A modal analysis of the model was performed using the Load Dependent Ritz Vector method, and 50 modes were computed. The modal frequencies ranged from 2.35 Hz to 71.94 Hz. There were 46 frequencies below 33 Hz. The computed modes gave more than 98% mass participation in each direction.

Response spectrum analyses were performed for the operating basis earthquake (OBE) and the safe shutdown earthquake (SSE). The modal damping ratios were 4% for OBE and 7% for SSE, from the OCGS Updated Final Safety Analysis Report (UFSAR) for bolted steel structures. 50 modes were included in the analysis, giving mass participation exceeding 98% in each direction.

The seismic inputs were the OBE and SSE floor response spectra from the OCGS UFSAR, at 4% (OBE) and 7% (SSE) damping, for the reactor building operating floor at El. 119'-3". There are separate smoothed and peak broadened spectra for the N-S, E-W and vertical directions.

Individual modal element stress contributions were initially combined by the absolute sum method for each direction of excitation, and directional responses were then combined by SRSS in accordance with Regulatory Guide 1.92. If an individual member stress exceeded the acceptance criteria using the absolute sum results, the member stress was recalculated using the 10% grouping method of Section 1.2.1 of Regulatory Guide 1.92.

Acceptance Criteria

The acceptance criteria were based on review of the OCGS UFSAR and NUREG-0800 (SRP). There were two load combinations:

1. DL + LL + OBE

   Acceptance criteria are from Table 3.8-5 of the OCGS UFSAR

   Tension: 0.60 Fy on net section
   Shear: 0.40 Fy on gross section
   Compression: varies with slenderness ratio
   Combined axial and bending: 0.60 or 0.66 Fy, reduced for members with excessive unbraced compression flange length in accordance with AISC specification

   The above conforms to AISC 9th Edition without 33% increase in allowable for earthquake load.

   Allowable stress for A325 bolts from AISC Table J3.2, with threads excluded from shear plane:

   Tension: 44 ksi (0.62 Fy)
   Shear: 30 ksi (0.42 Fy)

2. DL + LL + SSE

   Acceptance criteria are from NUREG-0800, Section 3.8.4, Equation 3.c.ii.a.1.

   Stresses are compared to 1.6 times normal allowable stress of Part 1 of AISC Specification.

Results

The following table shows the maximum stress results for the key sections of the model. They are in terms of the AISC interaction ratio for combined axial and bending stress.

	DL+LL+OBE	DL+LL+SSE
W14X74 Columns	0.94≤1.0	1.16≤1.6
Column Bracing	0.77≤1.0	1.05≤1.6
Crane Rail Girder	0.96≤1.0	1.15≤1.6
Roof Truss Chords	1.00≤1.0	1.37≤1.6
Roof Truss Bracing	0.98≤1.0	1.09≤1.6

The following are the maximum computed displacements (N-S, E-W, Vertical) in inches relative to the operating floor (absolute sum of modal displacements):

	OBE	SSE
Roof Truss Joints	0.39, 0.44, 0.26	0.51, 0.64, 0.37
Crane Runway/Bridge	0.95, 1.07, 0.48	1.22, 1.45, 0.61

The column bases (refer to attached drawing BR 4200) were checked as follows:

- All base plates have shear lugs to transfer base shear in the N-S direction. The maximum base shears in the N-S direction were 70.9 kip OBE and 96.9 kip SSE. The allowable shears in the shear lugs were 95 kip OBE and 153 kip SSE. The weld of the shear lug to the base plate controlled.

- Base plate types I, Ia and III have shear lugs to transfer base shear in the E-W direction. The maximum base shears in the E-W direction were 74.2 kip OBE and 95.8 kip SSE. The allowable shears in the shear lugs were 95 kip OBE and 153 kip SSE. The weld of the shear lug to the base plate controlled.

- Shear in the E-W direction of base plate types II, IV, IVa and V are transferred by the anchor bolts. The maximum base shears for these columns were 22.3 kip OBE and 26.7 kip SSE. The allowable shear in the anchor bolts was 70.8 kip OBE and 1.6x70.8 kip SSE based on AISC Table I-D for 1½-inch diameter A307 bolts in single shear.

- Vertical uplift loads are transferred by the anchor bolts in tension. The only base plates with uplift are types I, Ia, IV and IVa. The maximum uplift was 74.7 kip OBE and 126.6 kip SSE. The allowable tension load on the anchor bolt group was 105 kip OBE and 168 kip SSE, determined from AISC nominal capacity for 1½-inch diameter A307 bolts and reduced for spacing by the overlapping shear cone method. The bolt embedment was sufficient to develop the bolt nominal capacity. The base plate thickness was sufficient to preclude prying action.

- Shear-tension interaction for column anchor bolts transferring both shear and tension loads was checked using the tri-linear AISC shear-tension interaction formulation. The worst case shear force combined with the worst case tension force was found to lie within the bounds of the diagram.

The structural steel connections were checked by comparing the bounding DL+LL+OBE or DL+LL+SSE bolt load for each connection detail to the normal AISC bolt allowable bolt load. The bounding cases were:

- Column cross-bracing: W14x43 with ten ⅞-inch diameter A325 bolts per connection with threads excluded from the shear plane. Maximum bolt shear force is 8.7 kip versus AISC normal allowable of 18 kip.

- Roof truss framing: 5x3x⅜ double angle with four ⅞-inch A325 bolts. Maximum bolt shear force is 15.7 kip versus AISC normal allowable of 18 kip.

- Crane runway girder to column (bottom): four bolt stiffened beam seat connection (see Figure 2) with 1-inch A325 bolts. Maximum bolt shear is 10.7 kip versus AISC normal allowable of 23.6 kip, maximum bolt tension is 23.8 kip versus AISC normal allowable of 30.8 kip using AISC Table J3.3 for allowable tension with shear.

- Crane runway girder to column (top): a tie plate connects the top of the crane runway girder to the upper column section (element type 20 in Figure 2). The tie plate stress exceeded the acceptance criteria. A modification to the tie plate was designed so it would meet the criteria (Figures 7 and 8). After the design was completed, the model was revised to reflect the modified tie plate. The modification had no effect on the modal frequencies of the model or the resultant forces in the tie plate.

The elements representing the crane end truck wheels and the trolley wheels were checked for tension loads, which would indicate that the wheels would lift off the rails. The element forces were checked for the cases of DL+LL+OBE (up) and DL+LL+SSE (up). All of the forces were compressive, indicating that the wheels would not lift off.

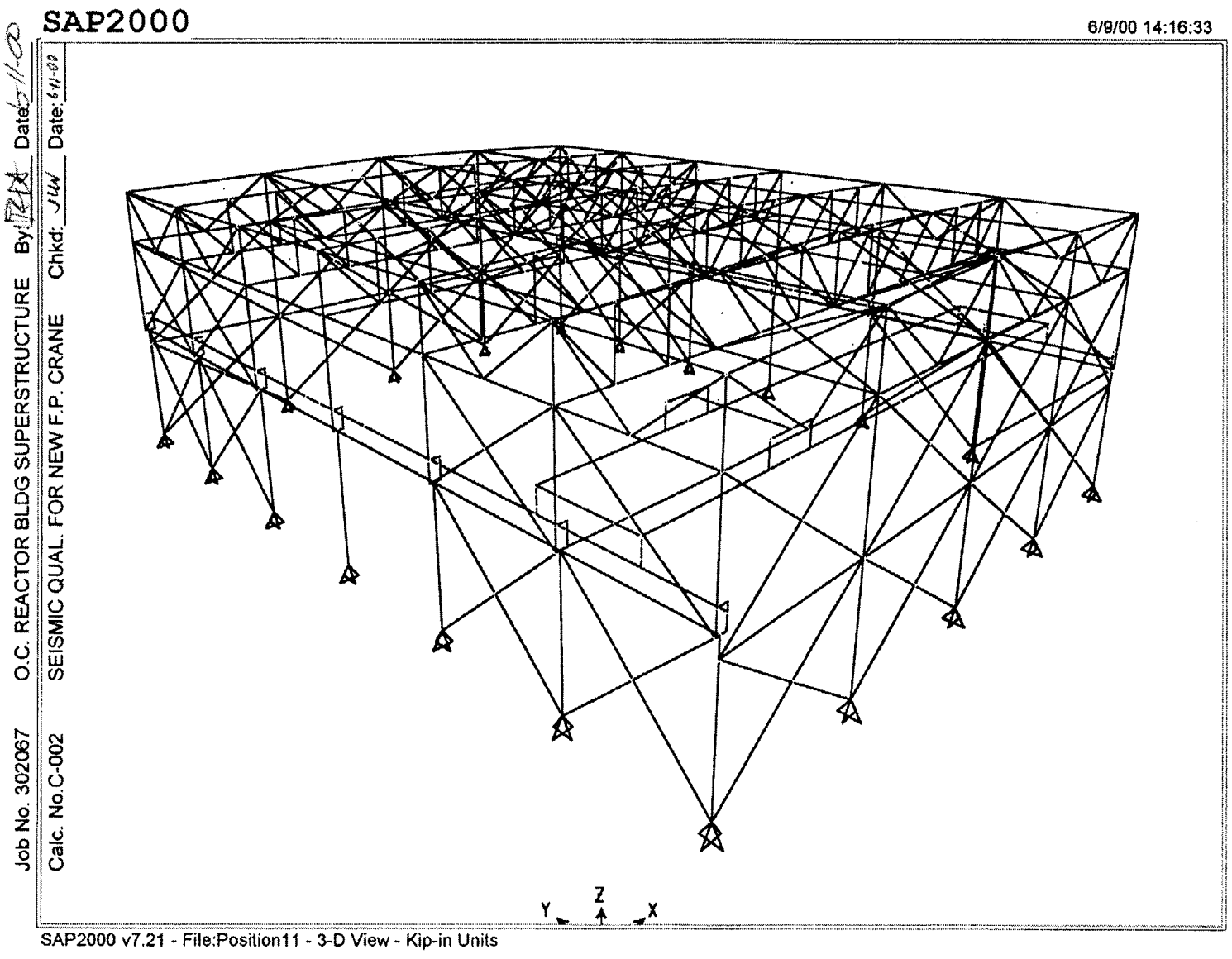
SAP2000
6/9/00 14:16:33
Job No. 302067
O.C. REACTOR BLDG SUPERSTRUCTURE
By:
Date:
Calc. No.C-002
SEISMIC QUAL. FOR NEW F.P. CRANE
Chkd:
Date:
Z
Y
X
SAP2000 v7.21 - File:Position11 - 3-D View - Kip-in Units

Figure 1

EQE INTERNATIONAL

SHEET NO. 45

JOB NO. 302067 JOB O.C. REACTOR BLDG SUPERSTRUCTURE BY TDA DATE 6-11-00

CALC. NO. C-002 SUBJECT SEISMIC QUAL. FOR NEW F.P. CRANE CHK'D JWW DATE 6-11-00

Runway Girder to Column Connection

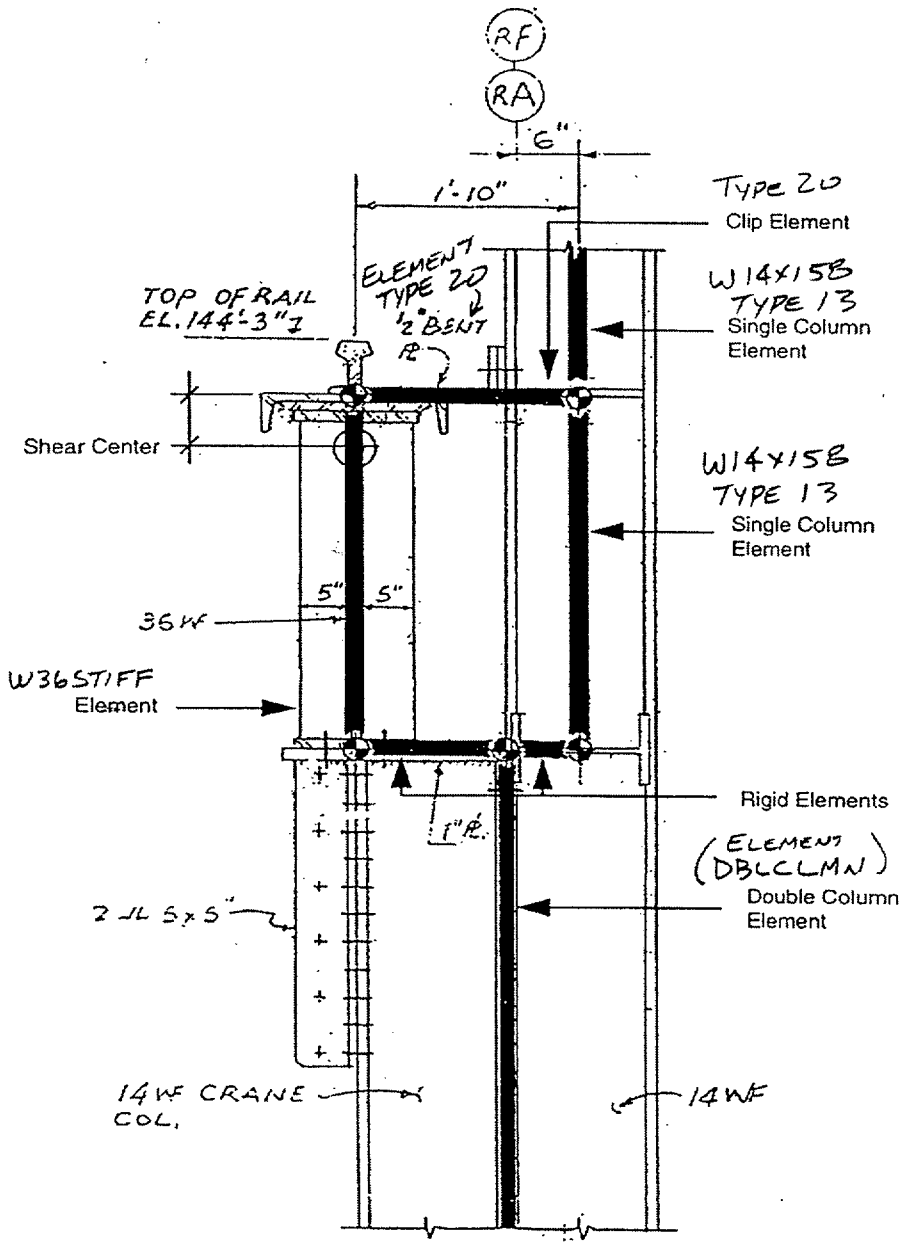

Figure 2

Figure 3

Pg 48

Job No. 302067 O.C. REACTOR BLDG SUPERSTRUCTURE By: TDR Date: 6-11-00

Calc. No.C-002 SEISMIC QUAL. FOR NEW F.P. CRANE Chkd: JMV Date: 6/11/00

SAP2000 v7.21 - File:Position11 - 3-D View - Kip-in Units

SAP2000

6/9/00 7:59:37

EQE INTERNATIONAL

SHEET NO. 46

JOB NO. 302067 JOB O.C. REACTOR BLDG SUPERSTRUCTURE BY TAA DATE 6/1/00

CALC. NO. C-002 SUBJECT SEISMIC QUAL. FOR NEW F.P. CRANE CHK'D JWL DATE 6/1/00

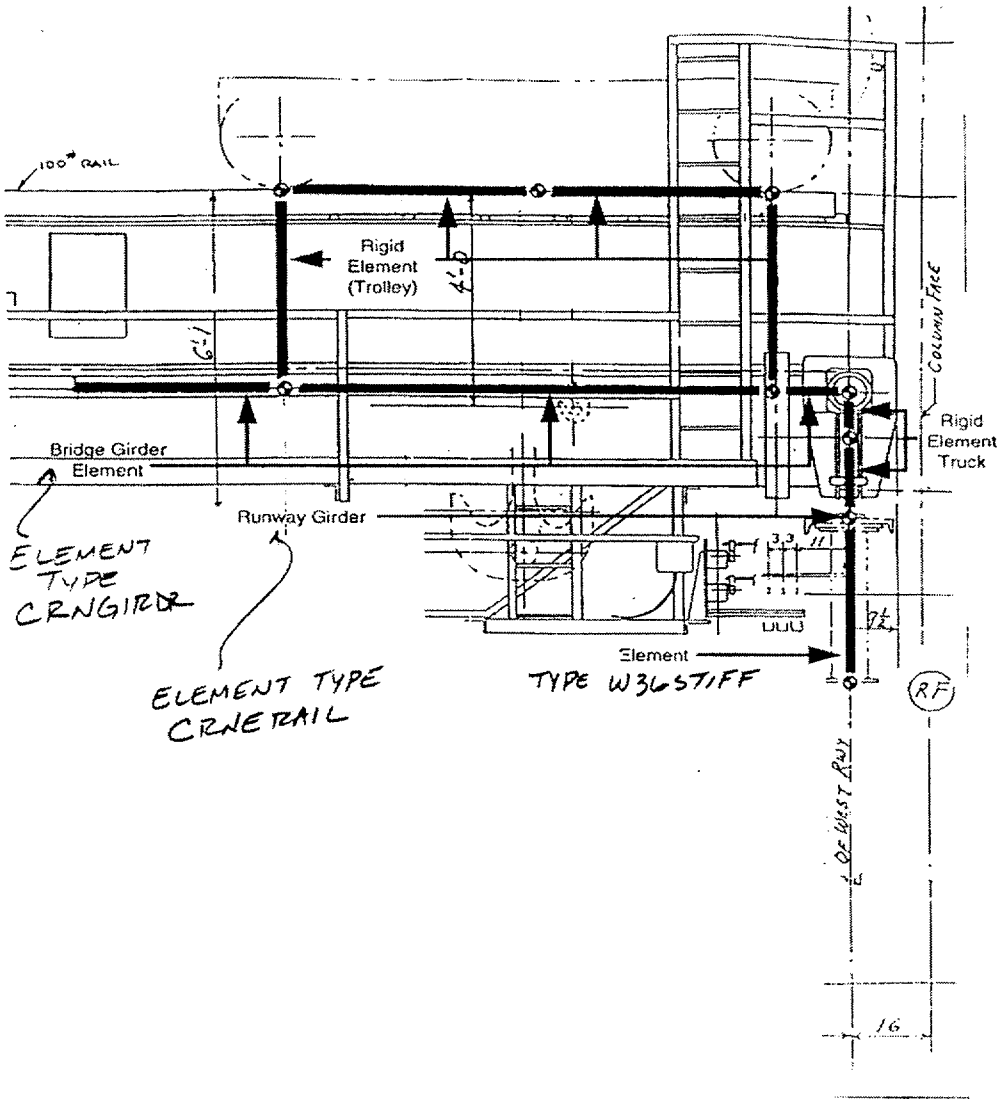

BRIDGE GIRDER TO RUNNING GIRDER CONNECTION

Figure 4

EQE INTERNATIONAL

SHEET NO. 47

JOB NO. 302067 JOB O.C. REACTOR BLDG SUPERSTRUCTURE BY TAA DATE 6-11-00

CALC. NO. C-002 SUBJECT SEISMIC QUAL. FOR NEW F.P. CRANE CHK'D JW DATE 6-11-00

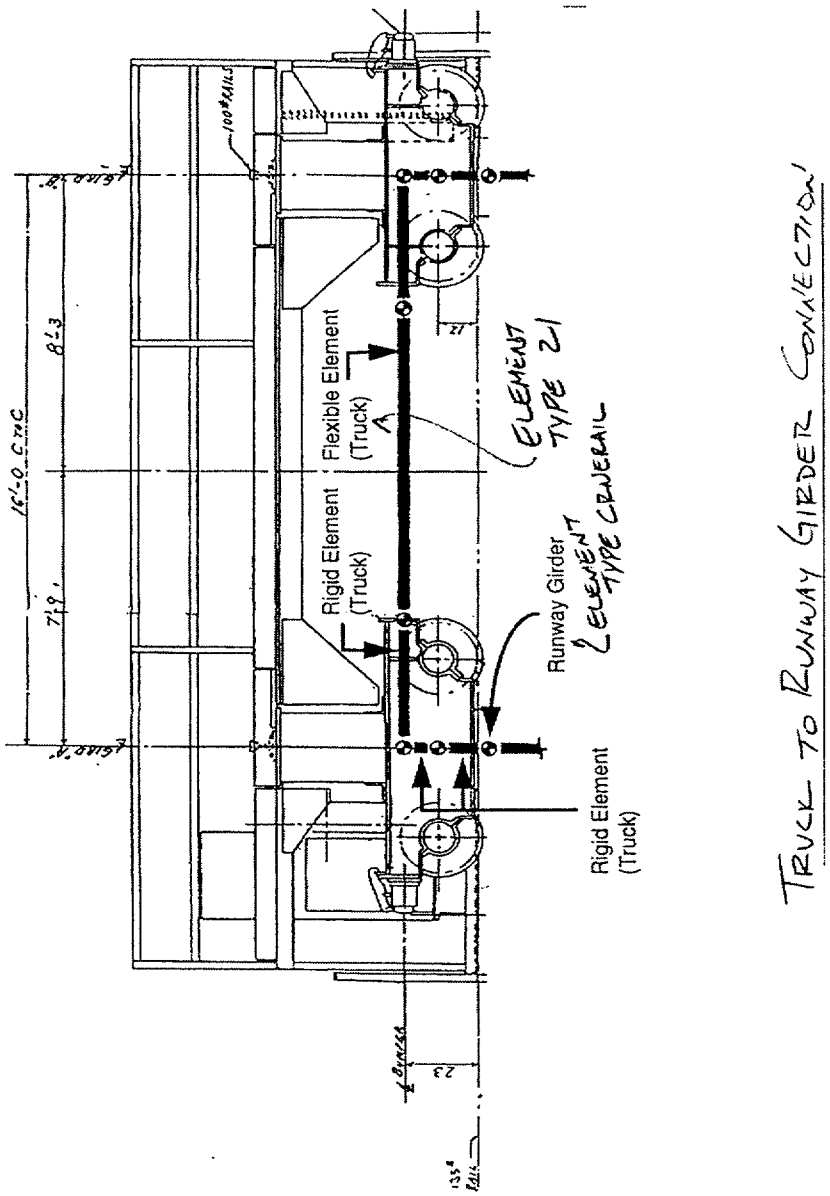

Figure 5

EQE INTERNATIONAL

SHEET NO. 41

JOB NO. 302067 JOB O.C. REACTOR BLDG SUPERSTRUCTURE BY RDA DATE 6-11-00

CALC. NO. C-002 SUBJECT SEISMIC QUAL. FOR NEW F.P. CRANE CHK'D VCM DATE 6-11-00

1 BY: RDA 7-3-00
CHKD: PB 7/3/00

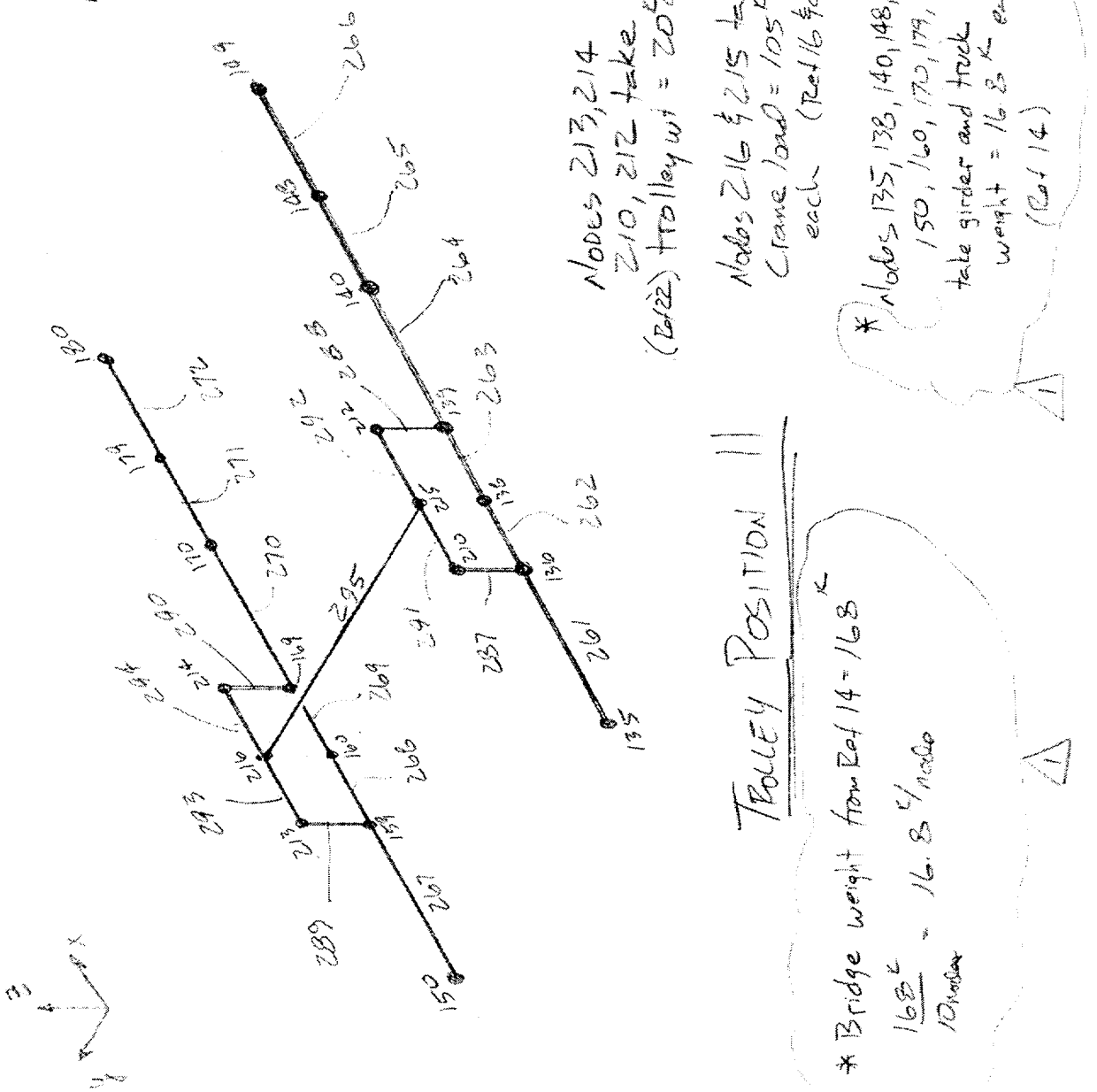

Figure 6

Figure 7

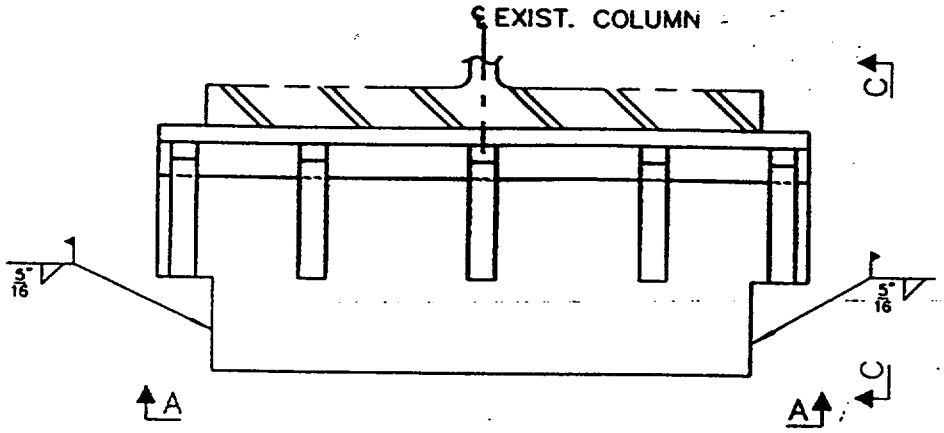

P L A N – END COLUMN

RA/R1; RA/R7; RF/R1; RF/R7

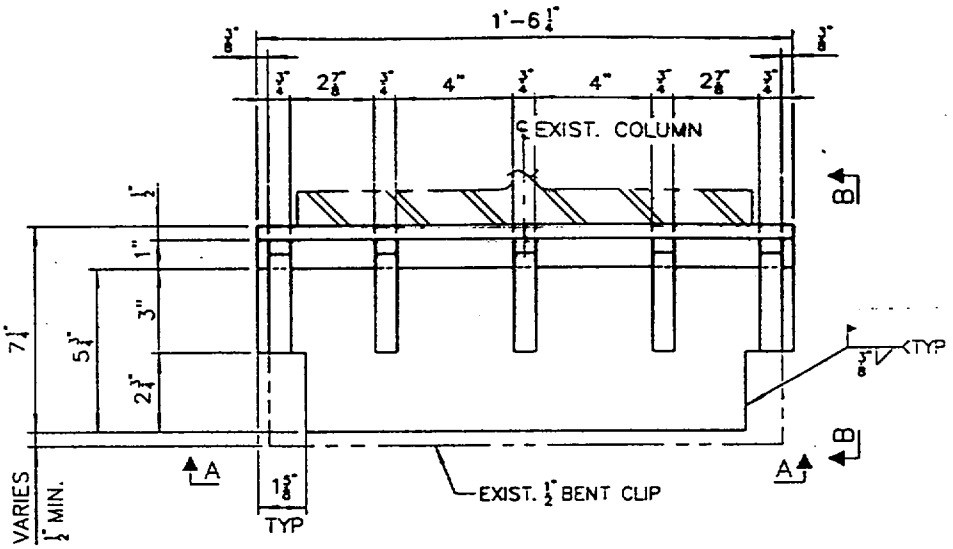

P L A N – INTERIOR COLUMN

RA/R2 to RA/R6 & RF/R2 to RF/R6

Figure 8

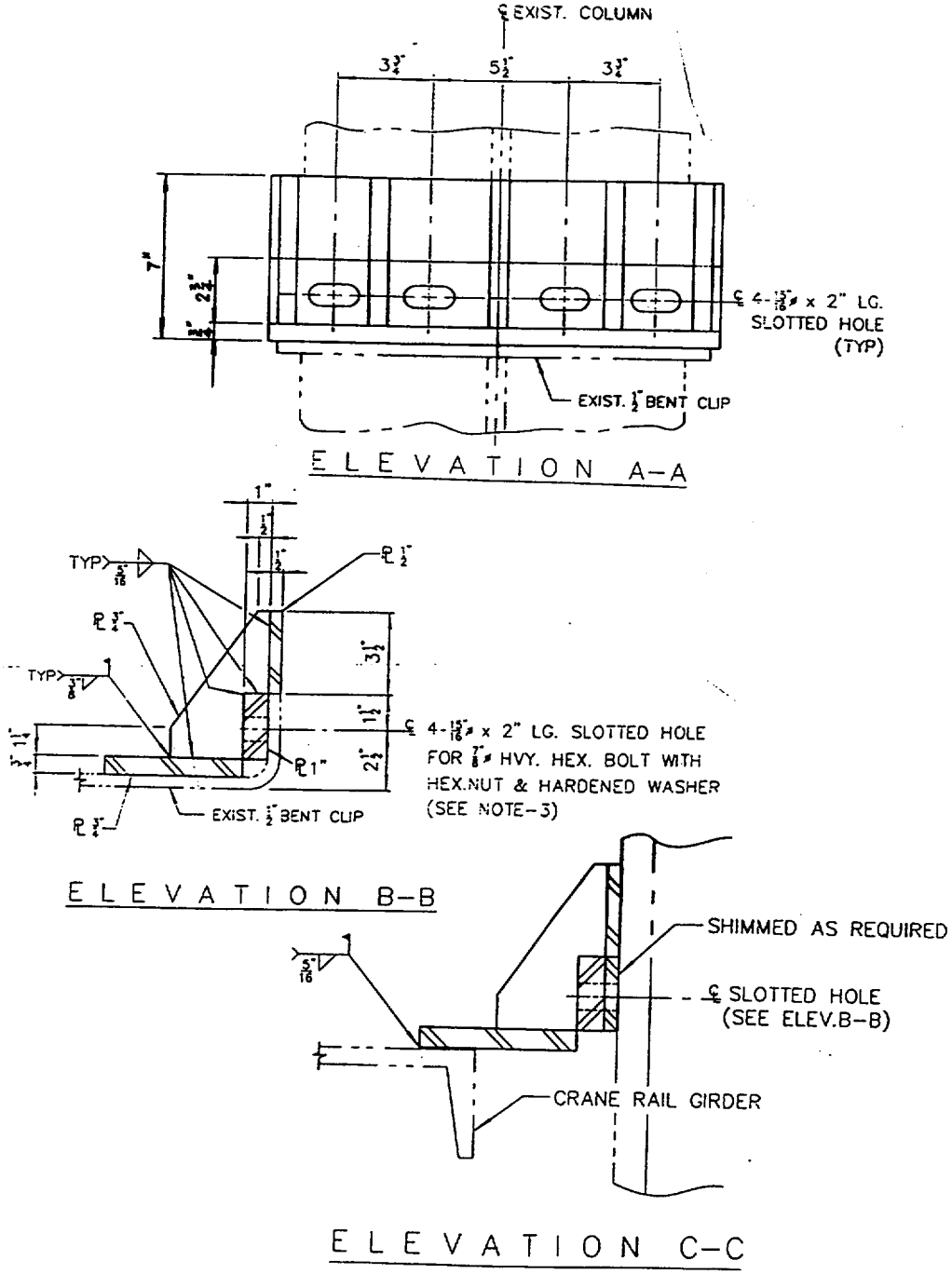

Building Modification

SEISMIC QUALIFICATION OF OCGS REACTOR BUILDING CRANE

1.0 OBJECTIVE AND SCOPE

1.1 Performance Objectives

- Seismic qualification of the new trolley is performed in accordance with CMAA 70 (1999), Class D for CMAA Cases 1, 2 and 3.
- Seismic qualification of the existing bridge and bogeys is performed in accordance with CMAA 70 (1975) for CMAA Cases 1, 2 and 3.
- Only the new trolley is seismically qualified for a 125 ton lifted load in anticipation of future applications.
- All structural components of the existing crane and new trolley are seismically qualified for a 105 ton lifted load.
- A postulated 'broken rope' accident condition is analyzed.
- Information from this calculation provided to the crane designer for use.

1.2 General Arrangement

- Bridge crane is supported by reactor building steel superstructure above refueling floor.
- Utilize existing bridge, end trucks and runway girders.
- Bridge span = 103'-4" center to center of runway rails.
- New single-failure-proof trolley mounted on existing bridge.

2.0 DESIGN INPUT INFORMATION

2.1 Classification, Design Codes and Standards

- OCGS reactor building crane is classified as an augmented quality equipment item.
- New replacement trolley is classified as Class D per CMAA 70 1999.
- Remainder of the crane demonstrated to meet the CMAA 70 1975 design specifications.
- ASME NOG-1 is used as a technical guide.
- Regulatory documents include the following:
  - NUREG-0554, "Single Failure Proof Cranes for Nuclear Power Plants"
  - NUREG-0612, "Control of Heavy Loads at Nuclear Power Plants" and associated documents

- NRC Regulatory Guide 1.104, "Overhead Crane Handling Systems for Nuclear Power Plants"
- NRC Regulatory Guide 1.92, "Combining Modal Responses and Spatial Components in Seismic Response Analyses"
- NRC Regulatory Guide 1.61, "Damping Values for Seismic Design of Nuclear Power Plants"

2.2 Technical Documents

- Trolley fabrication drawings - controlled set used for analysis and design.
- Crane drawings - OCGS records.
- EQE Report No. 50069-R-001, "Design Basis Seismic Response Spectra Analyses for the Oyster Creek Nuclear Generating Station - Reactor, Intake, and Turbine Buildings."
- Other OCGS design basis documents.

3.0 ANALYSIS APPROACH AND ACCEPTANCE CRITERIA

3.1 Immediate and Future Crane Use Requirements

- 105 Ton Lifted Load - Immediate use.
  - Applies to new trolley and remaining portions of the crane.
- 125 Ton Lifted Load - Future use.
  - Only applies to new trolley.

3.2 Environmental Conditions

- Seismic considerations include the following:
  - OBE and SSE loads were considered. Only the SSE is required to comply with NUREG-0554, Section 2.5 and NUREG-0612, Appendix C, Item (3).
  - Damping per USNRC RG 1.61 is 4% for OBE and 7% for SSE (i.e., bolted steel structures).
  - Seismic input is at top of reactor building runway girder - at reactor building crane columns.
    - SSE (7% damping) envelopes OBE (4%) curves.
    - Detailed analyses are performed only for SSE on the trolley using OBE allowables for acceptance criterion. For the bridge the acceptance criterion is 4/3 of OBE allowables.

- Reactor building internal pressure as a result of a LOCA.
  - Negligible effect on crane.
  - No further consideration of reactor building accident pressures is necessary.
- Pendulum swaying action of the lifted load is considered.
  - Shortest length of wire rope with lifted load, L_{min} = 7 ft.
  - Pendulum mode frequency at this length, $f_{max} = (1/2\pi)[g/L_{min}]^{0.5} = 0.34$ Hertz.
  - SSE and OBE accelerations are negligible at this frequency.

3.3 Design Conditions

- CMAA 70 (1999) loading conditions are completely defined by three combined load cases.
  - CASE 1 = $DL(DLF_B) + TL(DLF_T) + LL(1+HLF) + IFD$
  - CASE 2 = $DL(DLF_B) + TL(DLF_T) + LL(1+HLF) + IFD + WLO + SK$
  - CASE 3 = DL + TL + LL + EXTRA
  - Mathematical analysis demonstrates CASE 3 controls (lowest capacity/demand ratio) therefore, only CASE 3 is analyzed in detail.
- CMAA 70 (1999) broken rope accident condition considerations include the following:
  - New trolley is designed to hold the 125 ton lifted load in the event of a broken rope.
  - No specific acceptance criteria exists in either CMAA 70 or ASME NOG-1 industry standards for a broken rope condition.
  - General nuclear industry steel design practice of using 1.6 times the normal allowable stresses is adapted for this design condition in accordance with SRP Section 3.8.4.
- CMAA 70 (1975) applies to existing crane structural components.
  - This specification does not address seismic loading conditions.
  - Only seismic loading combination requiring detailed analyses is DL+LL+SSE for which the acceptance criteria applied is 1.33 times the normal CMAA 70 (1975) allowable stresses.
  - Extraordinary loading condition which includes the SSE controls over the normal loading condition for the crane structural components.
- ASME NOG-1, "Rules for Construction of Overhead and Gantry Cranes (Top Running Bridge, Multiple Girders)."
  - ASME NOG-1 document is used for technical guidance in several areas.

- Boundary conditions at the trolley/bridge and at the bridge end truck/runway interfaces defined in Section NOG-4154.3 are followed.

- Detailed analyses performed for six (6) trolley and hook positions per Section NOG-4153.7.

  - Trolley at the midspan, quarter span and at the end of the bridge girder.

  - Hook positions are fully extended and fully retracted.

3.4 Finite Element Analysis Method

- 3-D, linear elastic, small displacement finite element analyses.

  - Static analysis for self-weight and internal 'rope' force loading cases.

  - Response spectra analyses for seismic load cases.

    - Separate analyses for each orthogonal direction.

    - All three SSE directional components combined by SRSS method.

    - Mode cut-off frequency = 50 Hertz for response spectra analyses.

    - Modal combinations are per NRC 10% Method to conservatively account for closely spaced modes.

    - Dynamic 'missing mass' method used to account for higher mode contributions in each orthogonal direction which are subsequently conservatively combined with modal responses using the absolute sum method.

  - Equivalent static (i.e., static with dynamic load factor applied) for broken rope load case

- Comprehensive model includes entire crane assembly as well as Reactor Building runway girders.

  - Dynamic interaction between the crane and Reactor Building steel superstructure is inherent to the analyses by virtue of including runway girders in the model.

  - Bridge position relative to Reactor Building steel superstructure columns is selected to allow torsional and flexural distortions of the runway girders to occur.

- STARDYNE program used for all analyses.

  - Model composed entirely of beam elements.

  - Lumped weights assigned to locations of permanently attached hardware.

  - Connection eccentricities modeled using 'rigid' beam elements (i.e., beam elements with relatively large stiffnesses) per stiffness guidelines of AMSE NOG-1, Section 4153.3.

- See Figure 1 for isometric view of overall model (trolley at midspan, hook down configuration).

- Quality Assurance of the STARDYNE program:
  - EQE's version of STARDYNE was benchmarked against the crane manufacturer's certified version.

3.5 Fatigue Considerations

- Total number of lifts of significant loads (e.g., 10 tons) expected for this crane over its entire lifetime is low in the context of metal fatigue.
- Both CMAA 70 (1975) and CMAA (1999) specify stress limits for repeated load (fatigue) conditions.
- Common engineering practice to use 20,000 cycles as threshold for consideration of fatigue effects in structural design.
  - Estimated number of lifts as of October 1993 < 1000 (separate engineering study).
  - Projected number of lifts for total life much less than 20,000.
  - Therefore, no further consideration of fatigue effects is necessary.

4.0 SEISMIC ANALYSES

4.1 STARDYNE Finite Element Model Development

- Inherent features of the finite element model
  - Dynamic interaction between reactor building superstructure and crane included by virtue of the inclusion of runway girders in the model.
  - Exclusive use of conventional, prismatic beam elements throughout the model is consistent with industry practice (ASME NOG-1).
  - Modeling of trolley/bridge and bridge/runway interfaces complies with ASME NOG-1 recommendations thereby ensuring accurate and perhaps conservative representation of load path.
  - Model fidelity meets or exceeds ASME NOG-1 guidelines of Section NOG-4153.3.
- Finite element model description
  - Global +X = South, Global +Y = Upward and Global +Z = West
  - Six different finite element models are used:
    - TEHD - Trolley at end, hook down

- TEHU - Trolley at end, hook up
- TMHD - Trolley at midspan, hook down
- TMHU - Trolley at midspan, hook up
- TQHD - Trolley at quarter span, hook down
- TQHU - Trolley at quarter span, hook up

– Each of the six (6) models are identical except for position of the trolley and hook.

– Each of the six (6) models is analyzed twice, once for the 125 ton lifted load and once for the 105 ton lifted load.

4.2 Basic Load Input Data

- Dead load and live (lifted) load handled by application of 1.0 g vertical static acceleration in combination with specification weight densities for materials and lumped weights.
- Lifted load includes weight of lifting devices and wire rope.
- Internal (self equilibrating) rope forces acting on trolley sheaves applied as concentrated static forces.

4.3 Seismic Response Spectra Selection

- SSE 7% damping curves for N/S, E/W and vertical directions at top of reactor building crane columns are used as input.

4.4 Seismic Analysis Steps

- Lanczos eigenvalue/eigenvector extraction (STARDYNE/LANCZOS).
  – Extract modes with frequencies up to 50 Hertz.
  – Extract three (3) missing mass modes; one for each orthogonal direction.
- Response spectra analysis (STARDYNE/DYNRE4).
  – Use NRC 10% Method for combining modal responses for all modes with frequencies up to 50 Hertz.
  – Combine three (3) missing mass modes by SRSS into a separate load case.
- Combine static and dynamic analysis results (STARDYNE/POST).
  – Static dead plus live load case combined with seismic loads by the absolute sum method.

- New Trolley:
- Dead + Live + (E_{SSE} + E_{MM}) and Dead + Live - (E_{SSE} + E_{MM})
  - SSE seismic load, $E_{SSE} = [E_x^2 + E_y^2 + E_z^2]^{0.5}$
    - E_x, E_y, E_z = Combined modal responses ($f \leq 50$ Hertz) for each SSE input directional component
  - SSE missing mass, $E_{MM} = [E_{x_mm}^2 + E_{y_mm}^2 + E_{z_mm}^2]^{0.5}$
    - E_{x_mm}, E_{y_mm}, E_{z_mm} = Missing mass responses for each SSE input directional component

4.5 Member Design Checks

- New trolley - stress checks are made for all structural components for 125 ton lifted load plus seismic load cases in accordance with CMAA 70 (1999).
  - Load combinations and acceptance criteria checked:
    - COMB1 = (DL+LL) + E_{SSE} + E_{MM} $\leq$ 1.0[CMAA 70 (1999) Case 3]
    - COMB2 = (DL+LL) – E_{SSE} – E_{MM} $\leq$ 1.0[CMAA 70 (1999) Case 3]
- Existing crane components - stress checks are made for all structural components for 105 ton lifted load plus seismic load cases in accordance with CMAA 70 (1975).
  - Load combinations and acceptance criteria checked:
    - COMB1 = (DL+LL) + E_{SSE} + E_{MM} $\leq$ 1.33[CMAA 70 (1975)]
    - COMB2 = (DL+LL) – E_{SSE} – E_{MM} $\leq$ 1.33[CMAA 70 (1975)]
- Detailed screening stress checks for each member are performed using spreadsheet type calculations.
  - Some outliers found (calculated stress exceeds allowable stress).
  - Most outlier cases were attributed to excessive conservatism in seismic analysis; specifically in overestimation of flexural stiffnesses for 'stiff' beam elements used to represent member eccentricities.
- Model refinements reduced excessive conservatism in seismic analyses and all static and dynamic analyses were re-run.
  - Refinements were made to 'stiff' member properties in accordance with ASME NOG-1, Section 4153.3.
  - Detailed screening stress checks for each member are performed using spreadsheet type calculations.

- Resolution of remaining outliers is performed.

4.6 Connection Design Checks

- New trolley - member connections checked for compliance with CMAA 70 (1999) acceptance criteria for same load combinations used for member stress checks.
  - All connections satisfy acceptance criteria.
- Existing crane components - member connections checked for compliance with CMAA 70 (1975).
  - All connections satisfy acceptance criteria.
  - Special consideration given to check of bottom flange butt welds on bridge girders.

4.7 Reactor Building Runway Girder Reactions

- Reaction information is provided to confirm modeling assumptions regarding no uplift and for future reference.
- Tabulations of support reactions at the interface between the crane bridge wheels and the reactor building runway girders are provided for worst case conditions for the 105 ton lifted load.
  - TEHD and TEHU models.
  - Reactions listed for individual load cases Dead plus Live, SSE, SSE Missing Mass as well as combined results.
- Compressive (no uplift) reaction forces exist for all crane bridge wheels on trolley side of the bridge.
- Slight tensile (uplift) reaction forces exist for 2 of 4 wheels on opposite end of the bridge but net vertical force remains downward on the bogeys.

5.0 BROKEN ROPE ACCIDENT ANALYSIS

5.1 Analysis Method

- Equivalent static, linear elastic analysis performed for self weight and lifted load using the TMHD model.
- Trolley internal forces are not sensitive to position of the trolley on the bridge.

5.2 Applied Loads and Load Combinations

- Equivalent static analysis performed for self weight and lifted load.
  - Trolley internal forces are not sensitive to position of the trolley on the bridge.

- Dynamic load factor, DLF = 1.74 is applied to internal rope forces.

- Broken rope (BR) accident case is combined with dead and live load using the following equation and acceptance criteria:

  - COMB = (DL+LL) + BR ≤ 1.6[CMAA 70 (1999) CASE 1 Allowable Stresses]

5.3 Member Design Checks

- Only the new trolley is evaluated for the broken rope accident case.

- Detailed member stress checks per CMAA 70 (1999) are performed.

- All trolley members found to meet the acceptance criteria.

5.4 Connection Design Checks

- Only the new trolley is evaluated for the broken rope accident case.

- Based on a comparison of the SSE analysis results against the broken rope accident case results, the TEHU model analyzed for the SSE loading condition creates a higher demand on the trolley members and connections.

  - Since the seismic demand is higher with lower acceptance criteria, no detailed calculations are made for connections under the broken rope accident condition.

  - All connections are considered to be adequate.

6.0 SPECIAL CONSIDERATIONS

6.1 CMAA 70 (1999) Web Buckling

- Design equations employed by CMAA 70 (1999) for web buckling are based on rectangular web plates having simply supported boundary conditions on all four sides.

- Vertical edges of web plates are more nearly fixed than pinned due to continuity of the web plate across multiple interior diaphragm stiffeners.

- When screening stress checks employing the standard CMAA 70 web buckling methods produce outliers, alternate calculations are performed which more accurately reflect actual boundary conditions.

6.2 Existing Bridge Girder Connector Members

- At each end of the crane bridge, a built-up structural member consisting of a pair of C8 members tied at the top flanges by a wide steel cover plate is used to maintain a constant separation between bogeys.

- This built-up member is represented in the finite element model by beam elements.

- Calculated stress interaction ratios exceed 1.33 for the SSE loading condition but the energy absorption capacity exceeds the demand, therefore these members are considered acceptable.

6.3 Buckling of Sheave Support Plates

- CMAA 70 (1999) flexural buckling criteria does not adequately address the configuration of the rectangular plates used to support the sheaves in the upper sheave nest.
- A suitable design method based on classical buckling theory is developed for these plates.

7.0 SUMMARY OF RESULTS

7.1 Frequencies and Mode Shapes

- All six models (TEHU, TEHD, ... etc.) exhibit similar dynamic characteristics whether the lifted load is 125 tons or 105 tons.
- The first three modes typically represent the following responses.
  - Vertical simple beam flexure of bridge girders (Global Y).
  - Horizontal simple beam flexure of bridge girders in N/S (Global X) direction.
  - Lateral racking of bridge girders and end trucks in the E/W (Global Z) direction.
- Calculated frequencies for these basic modes vary between models but in general range from approximately 1.0 Hertz to 3.5 Hertz.
- A very high percentage of the generalized mass participates in the first three modes.

7.2 Maximum Stress Interaction Ratios

- New trolley maximum stress interaction ratios per CMAA 70 (1999) are as follows:
  - Detailed investigations of individual member outlier cases are performed; each outlier has been successfully resolved.
  - A summary of the critical locations and loading conditions within the trolley is as follows:
    - Weak axis bending (in horizontal plane) of the main load girt and auxiliary load girt produced by E/W seismic loading is the most significant contributor to the state of stress in these members.
      - The most critical area is at midspan of the girts.
      - Representative of a large stress interaction ratio for flexural stress, IR = 0.94 versus the acceptable value of 1.0 (TEHU Model, flange normal stress condition).
    - Torsion of the end truck box members at the trolley wheels, where the bottom flange is slotted, produces high torsional shear stresses due to the cross section being open.

- Representative of a large stress interaction ratio due to large torsional stress, IR = 0.88 versus the acceptable value of 1.0 (TEHU Model, web shear stress condition).

- Web buckling capacities of the main load girt, auxiliary load girt and to a lesser degree, the trolley end trucks are most sensitive to the web plate thickness as opposed to diaphragm spacing or other parameters.

  - These webs are essentially at their minimum allowable thicknesses, which is necessitated by the design requirement to save weight.

  - Maximum stress interaction ratio for web buckling, IR_{max} = 0.95 versus the acceptable value of 1.0.

- All connection designs meet the acceptance criteria.

- SSE loading conditions proved to be more demanding on the trolley members than the postulated broken rope accident condition in terms of stress interaction ratios.

- Existing crane component maximum stress interaction ratios per CMAA 70 (1975) are as follows:

  - A detailed investigation of this condition shows that the maximum stress interaction ratio, IR_{max} = 1.315 versus the acceptable value of 1.333.

  - In reviewing the capacity versus demand situation for each structural component of the reactor building crane, only one instance occurs where the member demand exceeded the capacity. This instance involves the end truck connection members, which perform the function of maintaining a constant separation distance between the pair of end trucks at each end of the crane bridge. A detailed investigation of these members shows that the energy absorption capacity, with appropriate factors of safety, exceeds the demand and the member is capable to perform its intended function, which is to maintain the distance between the end trucks. Using an energy basis under the SSE loading condition is in accordance with the Oyster Creek Updated FSAR, Section 3.8.4.5.

8.0 TECHNICAL INTERFACE WITH NEW TROLLEY MANUFACTURER

(Various results from the analyses were provided to the new trolley manufacturer for use in design of the new trolley.)

8.1 SSE Accelerations at Hook with 105 ton and 125 ton Lifted Loads

- Calculated SSE accelerations at the hook for each of the six (6) models (TEHD, TEHU, ... etc.) for both the 105 ton and 125 ton lifted loads are tabulated.

- These accelerations are not used in this calculation but are provided for use by the new trolley manufacturer.

8.2 SSE Accelerations on Bridge with 105 ton Lifted Load

- Calculated SSE accelerations on the bridge for each of the six (6) models (TEHD, TEHU, ... etc.) for both the 105 ton and 125 ton lifted loads are tabulated.
- These accelerations are not used in this calculation but are provided for use by new trolley manufacturer.

8.3 SSE Accelerations on Bridge with No Lifted Load

- Calculated SSE accelerations at the hook for each of the six (6) models (TEHD, TEHU, ... etc.) for no lifted load are tabulated.
- These accelerations are not used in this calculation but are provided for use by the new trolley manufacturer.

8.4 Trolley Uplift Loads

- Combined load case (DL+LL+SSE) forces acting at the wheel/rail interfaces for both the trolleys supported on the bridge during installation are tabulated for two (2) of the six (6) models for two lifted load conditions.
  - Models TEHU and TMHD are selected (worst cases).
  - One set of results is obtained from the 125 ton lifted load condition.
  - Due to the expectation that maximum uplift may occur for lighter lifted loads, additional seismic analyses of the TEHU and TMHD models for zero lifted load are performed.
  - Results show that in no case does a net uplift occur.
- These forces are not used in this calculation but are provided for use by the new trolley manufacturer.

8.5 Bridge and Building Girder Rail Loads

- Combined load case (DL+LL+SSE) forces acting at the wheel/rail interfaces for both the trolley on the bridge and the bridge end trucks on the runway girder are tabulated for all six (6) models (TEHD, TEHU, ... etc.) for the 105 ton lifted load condition.
- These forces are not used in this calculation but are provided for use by the new trolley manufacturer.

9.0 CONCLUSIONS

- All structural components and connections of the new trolley satisfy the design requirements of the CMAA 70 (1999) specification for Class D service and a 125 ton lifted load.
  - This conclusion is based on detailed static and dynamic analyses for the SSE loading condition which is shown to be more critical (higher demand versus allowable ratio) than the OBE loading condition.
  - In addition, the new trolley has been demonstrated to satisfy the design criteria adopted herein for the postulated broken rope accident condition.
- All structural components and connections of the existing crane satisfy the design requirements of the CMAA 70 (1975) specification for a 105 ton lifted load.
  - This conclusion is based on detailed static and dynamic analyses for the SSE loading condition which is shown to be more critical (higher demand versus allowable ratio) than the OBE loading condition.
  - Only in one case (end truck connector members) is the strain energy demand versus energy absorption capacity approach used in lieu of conventional stress based approach.
- The OCGS reactor building crane assembly satisfies the single-failure-proof structural design requirements set forth in regulatory documents NUREG-0554, NUREG-0612 and other related documents.
  - No physical modifications to existing crane structural components or connections are required
  - New trolley structural members and connections are adequate.

10.0 INHERENT CONSERVATISMS

- On a final note, it is worthwhile to identify several unquantifiable conservatisms inherent to all of the Reactor Building crane analyses as well as the reactor building steel superstructure analyses.
  - Linear elastic response spectra analyses are inherently conservative.
    - For example, effects such as friction at wheel/rail interfaces tend to dissipate energy.
    - It is expected that dynamic responses would be significantly reduced overall if nonlinear time history analysis methods are used as opposed to the linear elastic response spectra method.
  - Seismic response spectra used as input to these analyses represent an envelope of multiple spectra resulting from various soil-structure interaction analyses of the OCGS reactor building.
    - Separate analyses of the crane models using input spectra from a single soil condition would result in lower seismic responses.

- Analyzing the reactor building crane as being uncoupled from the reactor building adds conservatism.
    - Even though the modeling technique employed to represent the reactor building runway girders in the crane models meets the ASME NOG-1 guidelines, it is judged that a detailed model of the crane coupled with a detailed model of the building will result in lower seismic responses.

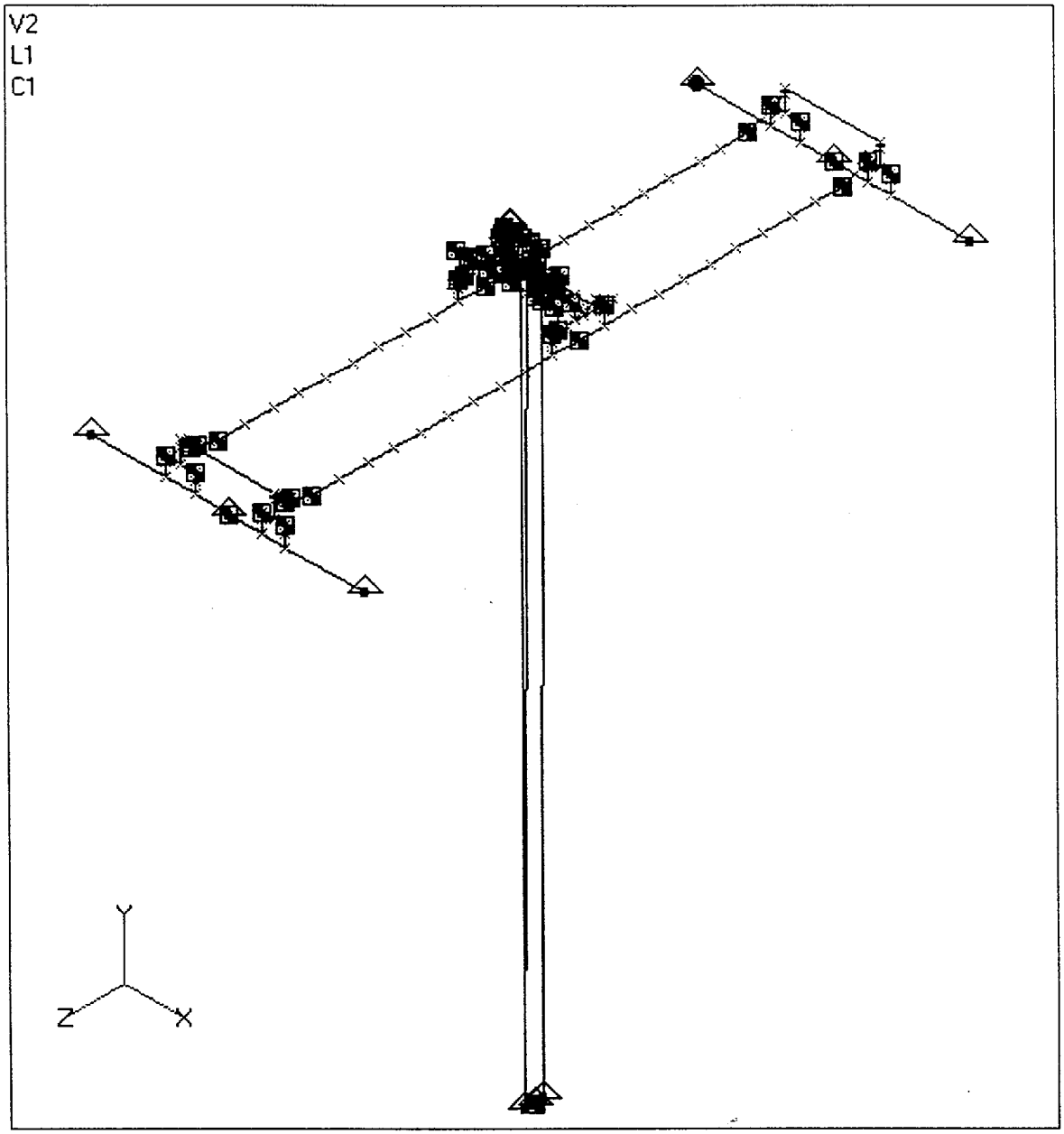

Figure 1 - Isometric View of Overall Finite Element Model

THIS PAGE IS AN OVERSIZED DRAWING OR FIGURE,

THAT CAN BE VIEWED AT THE RECORD TITLED: DRAWING NO. 4200-2, "REACTOR BUILDING COLUMN AND CRANE GIRDER DETAILS"

WITHIN THIS PACKAGE... OR BY SEARCHING USING THE DOCUMENT/REPORT NUMBER: 4200-2

NOTE: Because of these page's large file size, it may be more convenient to copy the file to a local drive and use the Imaging (Wang) viewer, which can be accessed from the Programs/Accessories menu.

Attachment I
Table of Contents

1		**Mechanical Drawings**
2		**Electrical Drawings**

Mechanical

Page	**Drawing #**	**Title**
3	D-18408-001	Trolley Replacement General Arrangement, Bridge Plan
4	D-18408-002	105/10 Ton Capacity Trolley Replacement General Arrangement, End Approach Elevation
5	D-18408-300 Sht 1	105/10 Ton Capacity Trolley Replacement Trolley Assembly, Plan View
6	D-18408-300 Sht 2	105/10 Ton Capacity Trolley Replacement Trolley Assembly, East Elevation
7	D-18408-320	105/10 Ton Capacity Trolley Replacement Main Hoist Machinery Arrangement
8	D-18408-350	105/10 Ton Capacity Trolley Replacement Trolley Drive Arrangement
9	D-18408-360	105/10 Ton Capacity Trolley Replacement Main Hoist Upper Block Arrangement
10	D-18408-390	105/10 Ton Capacity Trolley Replacement Main Hoist Reeving Diagram
11	D-18408-620	105/10 Ton Capacity Trolley Replacement Aux. Hoist Machinery Arrangement
12	D-18408-660	105/10 Ton Capacity Trolley Replacement Aux. Hoist Equalizer Arrangement
13	D-18408-750	105/10 Ton Capacity Trolley Replacement Lower Block Assembly
14	D-18408-910	105/10 Ton Capacity Trolley Replacement Main Hoist Rotary/Overspeed Limit Switch Arrgt.
15	D-18408-915	105/10 Ton Capacity Trolley Replacement Aux. Hoist Rotary/Overspeed Limit Switch Arrgt.
16	D-18408-920	105/10 Ton Capacity Trolley Replacement Aux. Drum Mis-spooling Monitor Arrangement
17	D-18408-930	105/10 Ton Capacity Trolley Replacement Main & Aux. Hoist Paddle Limit Switch Arrangement
18	D-18408-945	105/10 Ton Capacity Trolley Replacement Main Hoist Mis-spooling Switch Mount

Attachment I
Table of Contents

Page	Drawing #	Electrical Title
19	D-18408-800-2	General Notes, Symbols and Device Tax Index
20	D-18408-801	Electrical System One-Line Diagram
21	D-18408-840	Bridge Conduit Arrangement Diagram
22	D-18408-860	Main Hoist/Mainline Control Cabinet – Phys. Layout & Interconnections
23	D-18408-861	Aux Hoist, Trolley, & Bridge Cabinet – Phys. Layout & Interconnections
24	D-18408-862	PLC & Misc Controls Cabinet – Phys. Layout & Interconnections
25	D-18408-863	Bridge Mounted Junction boxes – Phys. Layout & Interconnections
26	D-18408-864	Crane Cab & Control Console – Phys. Layout & Interconnections
27	D-18408-865	Dataliner Msg Display Communications Control Panel – Phys. Layout & Interconnections
28	D-18408-804	Main Line Power & Control Distribution System Wiring
29	D-18408-805	Crane Utilities Power/Control System Wiring
30	D-18408-806	Main Hoist Control System Wiring
31	D-18408-807	Main Hoist Control System Wiring
32	D-18408-808	Auxiliary Hoist Control System Wiring
33	D-18408-809	Auxiliary Hoist Control System Wiring
34	D-18408-810	Trolley & Bridge Control System Wiring
35	D-18408-811	Main Hoist Power/Flux Vector Drive System Wiring
36	D-18408-812	Auxiliary Hoist Power/Flux Vector Drive System Wiring
37	D-18408-813	Trolley Power/Adjustable Frequency Drive System Wiring
38	D-18408-814	Bridge Power/Adjustable Frequency Drive System Wiring
39	D-18408-815	Air Conditioning Unit System Wiring
40	D-18408-816	PLC I/O System Wiring Diagram – 120 VAC Inputs
41	D-18408-817	PLC I/O System Wiring Diagram – 120 VAC Outputs
42	D-18408-818	PLC I/O System Wiring Diagram – Analog Inputs
43	D-18408-819	PLC I/O system Wiring Diagram – Analog Inputs
44	D-18408-820	PLC I/O System Wiring Diagrams – Analog Outputs
45	D-18408-821	PLC I/O System Wiring Diagrams – High Speed Counter Modules
46	D-18408-822	PLC I/O System Wiring Diagrams – 120 VAC Inputs
47	D-18408-823	Cattron Radio Control sys – Physical & Connection Diagrams
48	D-18408-824	Cattron Radio Control sys – Physical & Connection Diagrams
49	D-18408-825	Cattron Radio Control Sys – Install Notes & Conduit/Cable Schedules
50	D-18408-826	Weigh Scale System One-Line Diagram
51	D-18408-827	Weigh Scale System Interconnection Wiring Diagram
52	D-18408-831	PLC/Peripherals Cabling Layout 1 of 2
53	D-18408-832	PLC/Peripherals Cabling Layout 2 of 2

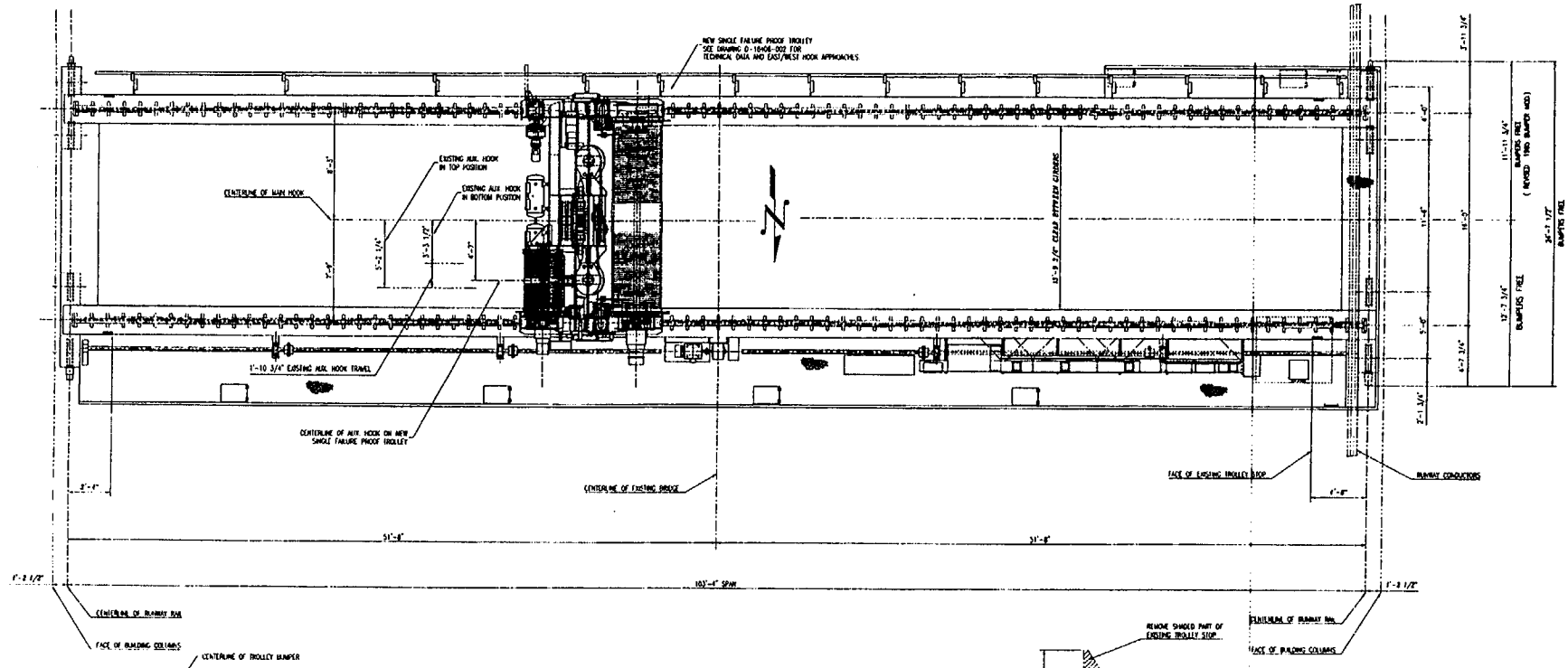

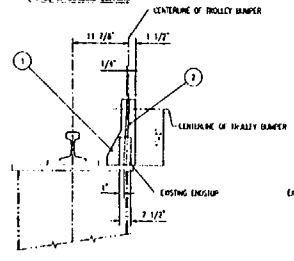

TROLLEY STOP LOCATION

NOTE:
ALL WELDS TO BE 1/4" CONTINUOUS FILLETS

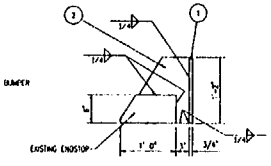

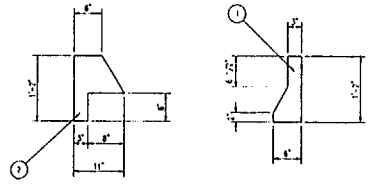

TROLLEY STOP DETAILS

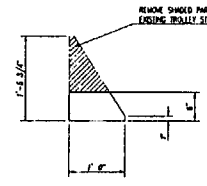

EXISTING TROLLEY STOP DETAIL

NOTE:
1. DIMENSIONS SHOWN IN ITALICS WERE FIELD VERIFIED BY ACECO

1	8/8/00	ISSUED FOR RECORD, SEE ECN 001-02	DC	GC	GPN
0	7/24/00	RELEASED FOR PRODUCTION	JP	DC	GPN

REVISIONS

FABRICATION TOLERANCES
0 - 2'-0" = ± 1/16 5'-1" - 10'-0" = ± 3/16
2'-1" - 5'-0" = ± 1/8 10'-1" & OVER = ± 1/4

DIMENSIONS ARE IN INCHES UNLESS OTHERWISE SPECIFIED
MACHINING TOLERANCES UNLESS OTHERWISE SPECIFIED:
FRACTIONAL = ± 1/32 ANGLES = ± 1/2°
2.0 = ± 015
3.000 = ± 005
BREAK ALL SHARP EDGES

TOLERANCES

DRAWING ENG. JAG FOR RJS	DATE 7/24/00	
ENGINEERING DATE J. RUCCIARDI	DATE 7/24/00	
ELECTRICAL ENG. K. DUNCH	DATE 7/24/00	
QUALITY ASSURANCE C. SKUTCH	DATE 07/24/00	
MANAGER ENGR. M	DATE	
DRAFTING MANAGER J. GRESCENER	DATE 7/24/00	
REV REVIEWED NA		

AMERGEN ENERGY COMPANY LLC
GPU NUCLEAR
P.O. NUMBER: 01028825

AMERICAN CRANE & EQUIPMENT CORPORATION
MOUNTAINSIDE, PA 18340-0153
PHONE: 609-266-0066 FAX: 609-266-3490

TITLE
TROLLEY REPLACEMENT
GENERAL ARRANGEMENT, BRIDGE PLAN

PROJECT
OYSTER CREEK REACTOR BUILDING CRANE UPGRADE

DRAWN BY J. PEREZ	DATE 07/24/00	SCALE 1/4" = 1 - 0"
DESIGNED BY D. CROSS	DATE 7/24/00	ELECTRONIC FILE 1040800101.DWG
APPROVED BY G. WALCK	DATE 7/24/00	DRAWING SIZE 34x50

DRAWING NUMBER D-18408-001 REV. 1

THIS DRAWING AND ALL DATA CONTAINED HEREIN IS THE PROPERTY OF AMERICAN CRANE & EQUIPMENT CORPORATION AND SHALL NOT BE REPRODUCED OR COPIED IN WHOLE OR IN PART, LOANED, SOLD, OR OTHERWISE COMMUNICATED OR TRANSFERRED TO ANY THIRD PARTY WITHOUT PRIOR WRITTEN APPROVAL OF AMERICAN CRANE AND EQUIPMENT CORPORATION

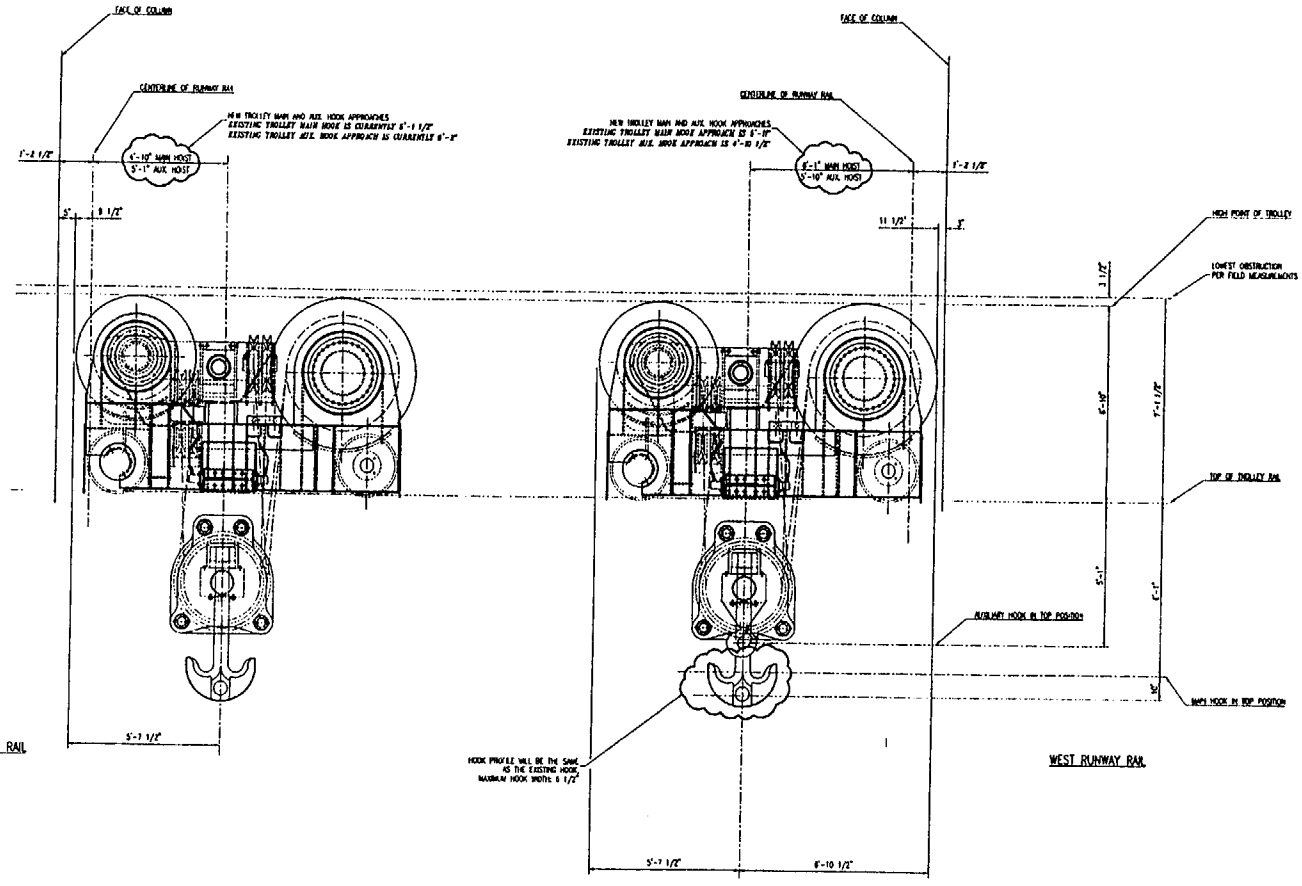

TROLLEY ELEVATION, LOOKING SOUTH

CRANE DATA

PROPOSED BRIDGE CAPACITY	105 TONS
MAIN HOIST CAPACITY	125 TONS, WCL
AUX. HOIST CAPACITY	10 TONS
MAIN HOIST LIFT	120'-6"
AUX. HOIST LIFT	122'-8"
MAIN HOIST SPEED	0.25-5 FPM VARIABLE 7 FPM SWIFT LIFT
AUX. HOIST SPEED	1.35-27 FPM VARIABLE 45 FPM SWIFT LIFT
TROLLEY SPEED	2 - 20 FPM VARIABLE
BRIDGE SPEED	EXISTING
CONTROL ENCLOSURE	NEMA 4
MAIN AND AUX. HOIST	NUREG 0554 COMPLIANT CMAA #70 CLASS "D"
MAX. TROLLEY WEIGHT	NOT TO EXCEED 78,000 LBS.

NOTE:

1. AUX. HOIST 2 x 2 REEVING SFP RIGHT AND LEFT LAY. 5/8" DIA., 9 x 25 PYTHON HSRV EEIPS, 30.6 TON BREAKING STRENGTH, LUBRICATED WITH ELASKON 20.
2. MAIN HOIST 2 x 4 REEVING SFP RIGHT AND LEFT LAY. 1 1/2" DIA., 9 x 25 PYTHON HSRV EEIPS, 172.8 TON BREAKING STRENGTH, LUBRICATED WITH ELASKON 20.
3. DIMENSIONS IN ITALICS HAVE BEEN FIELD VERIFIED BY ACECO.

THIS DRAWING AND ALL DATA CONTAINED HEREIN IS THE PROPERTY OF AMERICAN CRANE & EQUIPMENT CORPORATION AND SHALL NOT BE REPRODUCED OR COPIED IN WHOLE OR IN PART, LOANED, SOLD, OR OTHERWISE COMMUNICATED OR TRANSFERRED TO ANY THIRD PARTY WITHOUT PRIOR WRITTEN APPROVAL OF AMERICAN CRANE AND EQUIPMENT CORPORATION.

REVISIONS

REV. NO.	DATE	REVISION DESCRIPTION	DRAWN BY	CHK'D BY	APP'D BY
1	09/21/00	FOR RECORD	JP	DG	GPM
0	7/26/00	RELEASED FOR PRODUCTION	JP	DG	GPM

FABRICATION TOLERANCES

0 - 2'-0" = ± 1/16 | 5'-1" - 10'-0" = ± 3/16
2'-1" - 5'-0" = ± 1/8 | 10'-1" & OVER = ± 1/4

DIMENSIONS ARE IN INCHES UNLESS OTHERWISE SPECIFIED
MACHINING TOLERANCES UNLESS OTHERWISE SPECIFIED
FRACTIONAL = ± 1/32 ANGLES = ± 1/2°
X.XX = ± .015
X.XXX = ± .005
BREAK ALL SHARP EDGES

TOLERANCES

DRAWN BY	JAD FOR RJR	7/26/00
DESIGNED BY	J. RUBCHALL	7/26/00
ENGINEER BY	E. BONER	7/26/00
REQUIRED BY	C. SEETON	7/26/00
CHECKED BY	N.A.	
APPROVED BY	J. CRESENCE	7/26/00
PLANT MANAGER	NA	

AMERGEN ENERGY COMPANY LLC
GPU NUCLEAR
P.O. NUMBER: 01028825

AMERICAN CRANE & EQUIPMENT CORPORATION
MOUNT JOY, PA. 17552 U.S.A.
PHONE: 717-653-1861 FAX: 717-653-2118

105/10 TON CAPACITY TROLLEY REPLACEMENT
GENERAL ARRANGEMENT, END APPROACH ELEVATION

PROJECT: OYSTER CREEK REACTOR BUILDING CRANE UPGRADE

DRAWN BY	J. PONTZ	02/14/00
REVIEWED BY	B. CROSS	7/26/00
APPROVED BY	C. MAUCK	7/26/00

SCALE: 1/2" = 1' - 0"
DRAWING NO.: 18408000H1.DWG
DRAWING TYPE: 19400
DRAWING NUMBER: D-18408-002
REV: 1

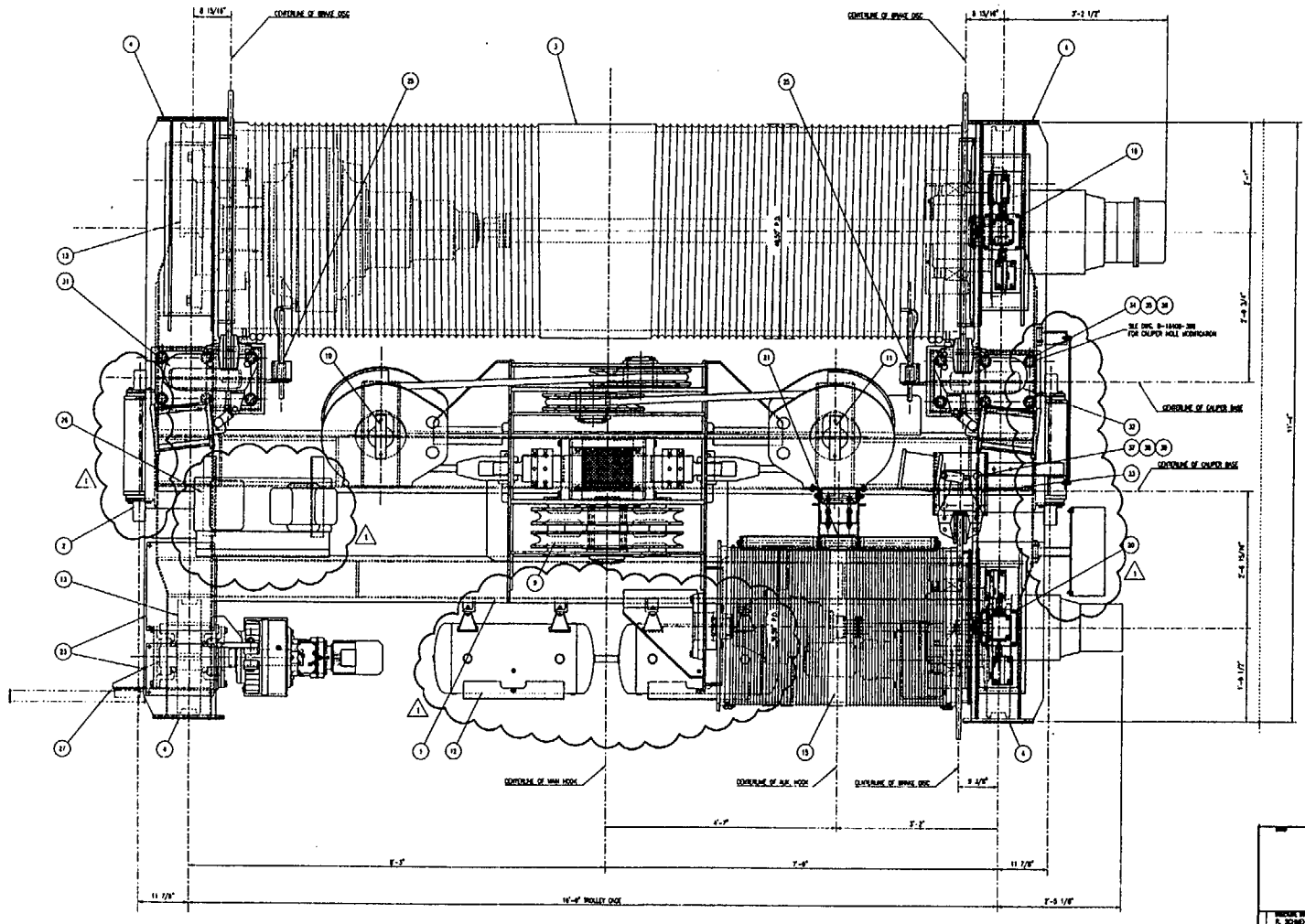

FABRICATION TOLERANCES
0 - 2'-6" = ± 1/16 5'-1' - 10'-6" = ± 3/16
2'-1' - 5'-6" = ± 1/8 10'-1' & OVER = ± 1/4

DIMENSIONS ARE IN INCHES UNLESS OTHERWISE SPECIFIED
MACHINING TOLERANCES UNLESS OTHERWISE SPECIFIED
FRACTIONAL = ± 1/32 ANGLES = ± 1/2°
.XX = ± .015 √ = 125
.XXX = ± .005
BREAK ALL SHARP EDGES

TOLERANCES

REVISIONS

REV. NO.	DATE	REVISION DESCRIPTION	DRAWN	APP.	APP.
0	6/26/00	RELEASED FOR PRODUCTION	JP	GC	GB
1	7/19/00	REVISED TO MATCH RETAIL CHANGES	JP	GC	GB

THIS DRAWING AND ALL DATA CONTAINED HEREIN IS THE PROPERTY OF AMERICAN CRANE & EQUIPMENT CORPORATION AND SHALL NOT BE REPRODUCED OR COPIED IN WHOLE OR IN PART, LOANED, SOLD, OR OTHERWISE COMMUNICATED OR TRANSFERRED TO ANY THIRD PARTY WITHOUT PRIOR WRITTEN APPROVAL OF AMERICAN CRANE AND EQUIPMENT CORPORATION.

AMERGEN ENERGY COMPANY LLC
GPU NUCLEAR
P.O. NUMBER: 0102826

AMERICAN CRANE & EQUIPMENT CORPORATION
EXTON, PENNSYLVANIA, 19341 U.S.A.
PHONE: 610-363-4021 FAX: 610-363-2191

DRAWN BY R. SCHMIDT	DATE 6/20/00	TITLE 105/10 TON CAPACITY TROLLEY REPLACEMENT TROLLEY ASSEMBLY, PLAN VIEW
DESIGNED BY J. KURKOWSKI	DATE 6/20/00	PROJECT OYSTER CREEK REACTOR BUILDING CRANE UPGRADE
CHECKED BY K. SCHICK	DATE 6/20/00	
EQUIPMENT ENGINEER C. STOTICH	DATE 6/20/00	DRAWN BY A. FONTZ — DATE 6/21/00 — SCALE 1" = 1'-0"
DRAWING CHK.	DATE	DESIGNED BY B. CROSS — DATE 6/20/00 — DRAWING FILE 18408D001.DWG
NB		APPROVED BY G. MAUCK — DATE 6/20/00 — ACE DWG NO. 18408
DWG. CHECKED J. GRESEMER	DATE 6/20/00	
ACE PROJECT D-18408-001		DRAWING NUMBER D-18408-300, SHEET 1 — REV. 1

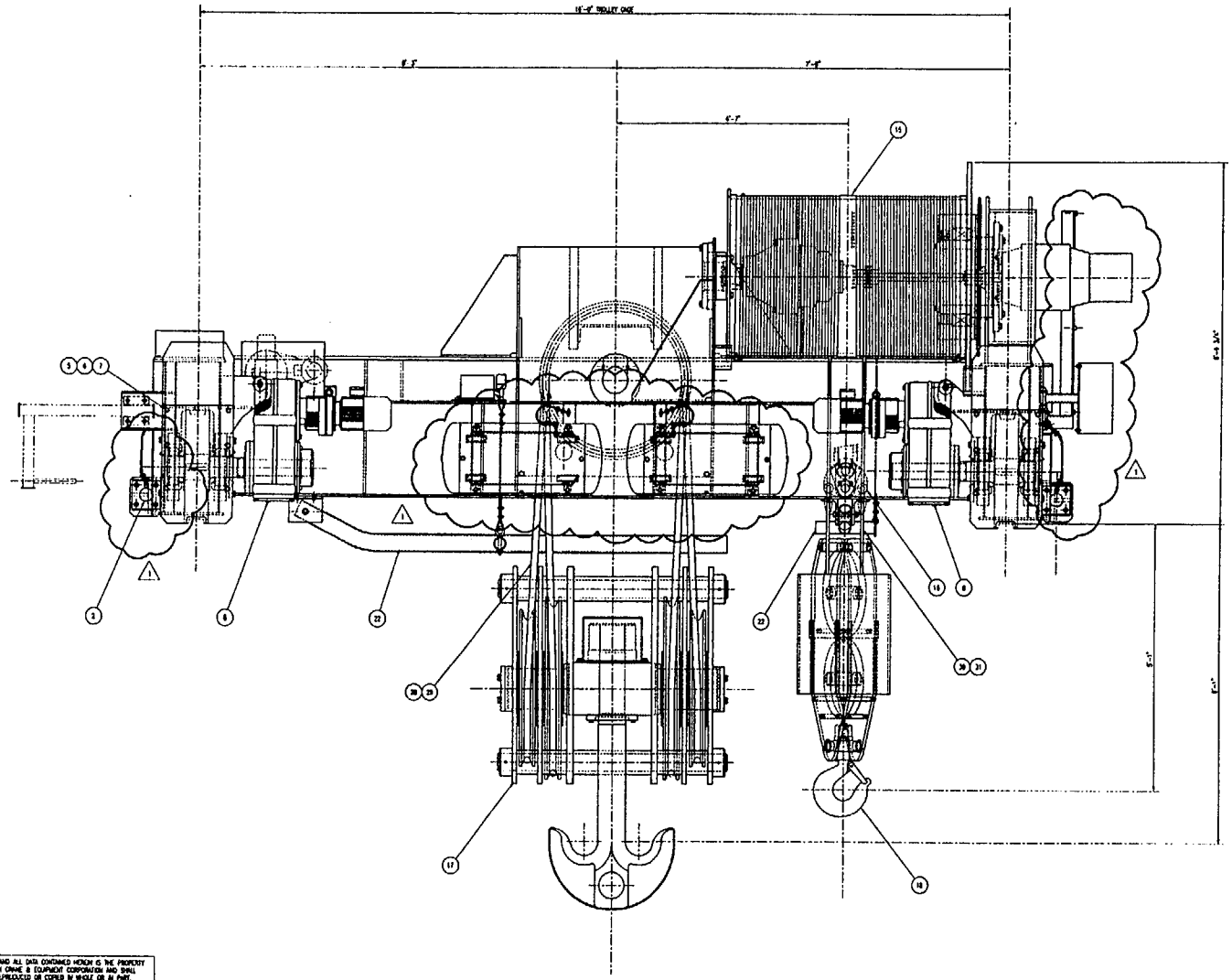

AMERICAN TOLERANCES
0 - 2'-0" = ± 1/16 2'-1" - 10'-0" = ± 3/16
2'-1" - 5'-0" = ± 1/8 10'-1" & OVER = ± 1/4

DIMENSIONS ARE IN INCHES UNLESS OTHERWISE SPECIFIED
MACHINING TOLERANCES UNLESS OTHERWISE SPECIFIED
FRACTIONAL = ± 1/32 ANGLES = ± 1/2°
2.XX = ± .015
3.XXX = ± .005
BREAK ALL SHARP EDGES

TOLERANCES

REVISIONS

REV. NO.	DATE	REVISION DESCRIPTION	DRWN	CHK	APP
0	6/20/00	RELEASED FOR PRODUCTION	JP	GE	GB
1	7/24/00	REVISED TO MATCH REAL CHANGES	JP	GE	GB

THIS DRAWING AND ALL DATA CONTAINED HEREIN IS THE PROPERTY OF AMERICAN CRANE & EQUIPMENT CORPORATION AND SHALL NOT BE REPRODUCED OR COPIED IN WHOLE OR IN PART, LOANED, SOLD, OR OTHERWISE COMMUNICATED OR TRANSFERRED TO ANY THIRD PARTY WITHOUT PRIOR WRITTEN APPROVAL OF AMERICAN CRANE AND EQUIPMENT CORPORATION.

AMERGEN ENERGY COMPANY LLC
GPU NUCLEAR
P.O. NUMBER: 01038836

AMERICAN CRANE & EQUIPMENT CORPORATION
KOHLSVILLE, PA. 19440 U.S.A.
PHONE: 610-385-6000 FAX: 610-385-3410

DRAWN BY: R. SCHMIDT	DATE: 6/20/00	TITLE: 105/10 TON CAPACITY TROLLEY REPLACEMENT TROLLEY ASSEMBLY, EAST ELEVATION
DESIGNED BY: J. BURCHNALL	DATE: 6/20/00	
ENGINEER: K. BOWER	DATE: 6/20/00	PROJECT: OYSTER CREEK REACTOR BUILDING CRANE UPGRADE
GROUP ENGINEER: C. SPOTOX	DATE: 6/20/00	DRAWN BY: J. PEREZ DATE: 6/2/00 SCALE: 1" = 1' - 0"
PROJECT ENGR: N/A	DATE:	DESIGNED BY: D. CROSS DATE: 6/20/00 DRAWING NO.: 18406300R1.DWG
MGR. ENGINEER: J. GRESCHER	DATE: 6/20/00	DRAWING BY: E. WALTX DATE: 6/20/00 PROJECT NUMBER: 18406
CHIEF ENGINEER: D-18406-300, SHEET 1		DRAWING NUMBER: D-18406-300, SHEET 2 REV: 1

D-18406-300, SHEET 2

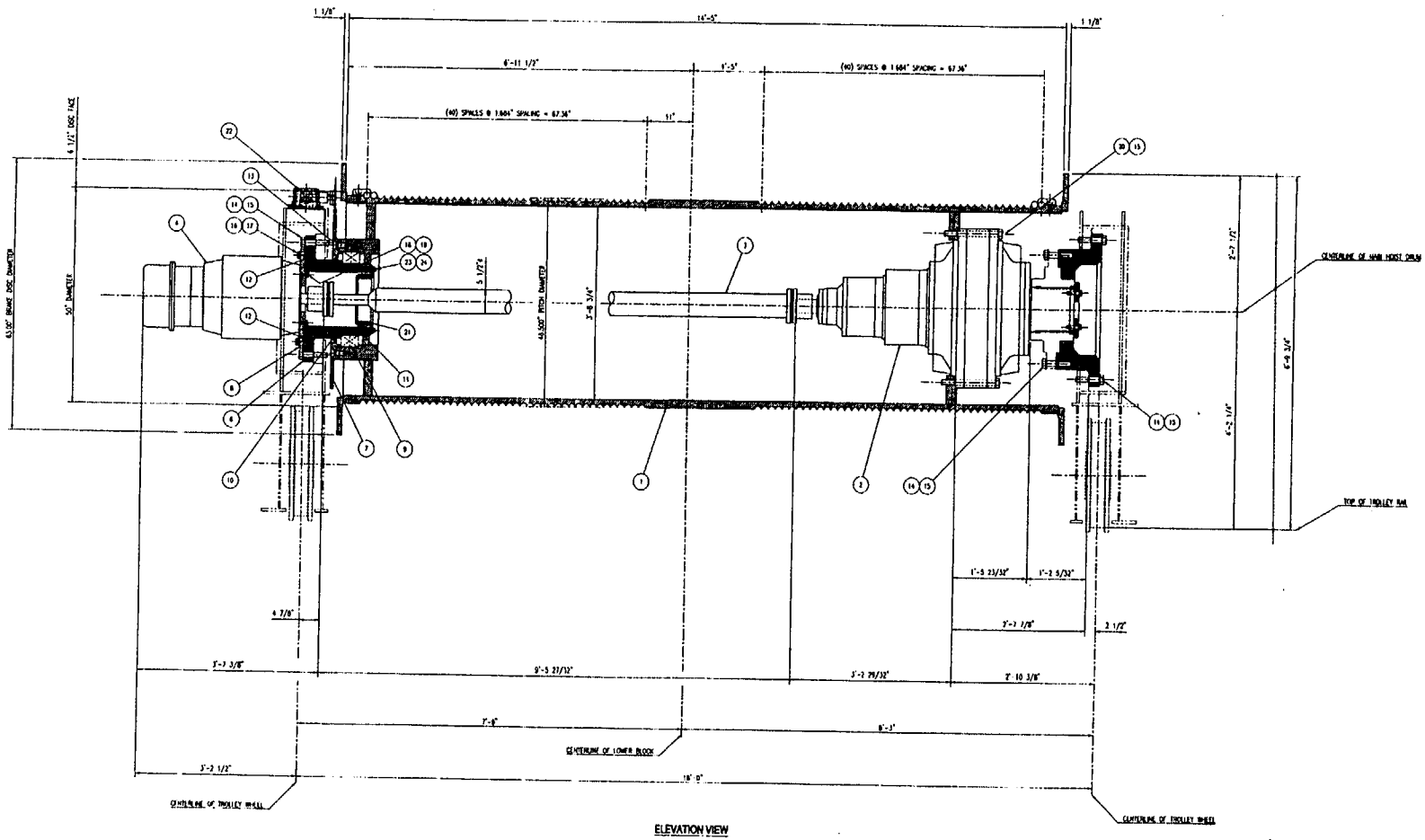

ELEVATION VIEW

SECTION THRU CENTERLINE OF DRUM

REV. NO.	DATE	REVISION DESCRIPTION	DRAWN	CHK	APP
2	6/3/00	UPDATE TO BOM, SEE ECN #320-03	DG	JR	CPW
1	7/15/00	UPDATE TO DETAILS, SEE ECN #320-02	DG	JR	CPW
0	6/5/00	RELEASED FOR PRODUCTION	DG	BG	CPW

REVISIONS

FABRICATION TOLERANCES
0 - 3'-0" = ± 1/16 3'-1" - 10'-0" = ± 3/16
3'-1" - 5'-0" = ± 1/8 10'-1" & OVER = ± 1/4

DIMENSIONS ARE IN INCHES UNLESS OTHERWISE SPECIFIED
MACHINING TOLERANCES UNLESS OTHERWISE SPECIFIED
FRACTIONAL = ± 1/32 ANGLES = ± 1/2°
2 DEC = ± .015 ✓ = 125 ✓
3 DEC = ± .005
BREAK ALL SHARP EDGES

TOLERANCES

DRAWN BY	M	DATE
DESIGNED BY	J. RUBOCKELL	6/5/00
ENGINEER BY	M	DATE
QUALITY ENGINEER	C. STUTTER	06/05/00
MANAGER MECH.	M	DATE
MFG. ENGINEER	J. CHRISTMER	6/5/00

PART DRAWING D-18406-300

SHEET

AMERGEN ENERGY COMPANY LLC
GPU NUCLEAR
P.O. NUMBER: 01020625

AMERICAN CRANE & EQUIPMENT CORPORATION
MAYLE-GERMALE, PA. 19064 U.S.A.
PHONE: 610-286-8000 FAX: 610-286-3141

TITLE: 105/10 TON CAPACITY TROLLEY REPLACEMENT MAIN HOIST MACHINERY ARRANGEMENT

PROJECT: OYSTER CREEK REACTOR BUILDING CRANE UPGRADE

DRAWN BY J. PONTZ	DATE 02/17/00	SCALE 1" = 1' - 6"
DESIGNED BY M. SELZ	DATE 6/5/00	REFERENCE DWG 18408330R2 DWG
APPROVED BY G. MALEK	DATE 6/5/00	DRAWING TEMPLATE 18408

DRAWING NUMBER D-18408-320 REV. 2

THIS DRAWING AND ALL DATA CONTAINED HEREIN IS THE PROPERTY OF AMERICAN CRANE & EQUIPMENT CORPORATION AND SHALL NOT BE REPRODUCED OR COPIED IN WHOLE OR IN PART, LOANED, SOLD OR OTHERWISE COMMUNICATED OR TRANSFERRED TO ANY THIRD PARTY WITHOUT PRIOR WRITTEN APPROVAL OF AMERICAN CRANE AND EQUIPMENT CORPORATION

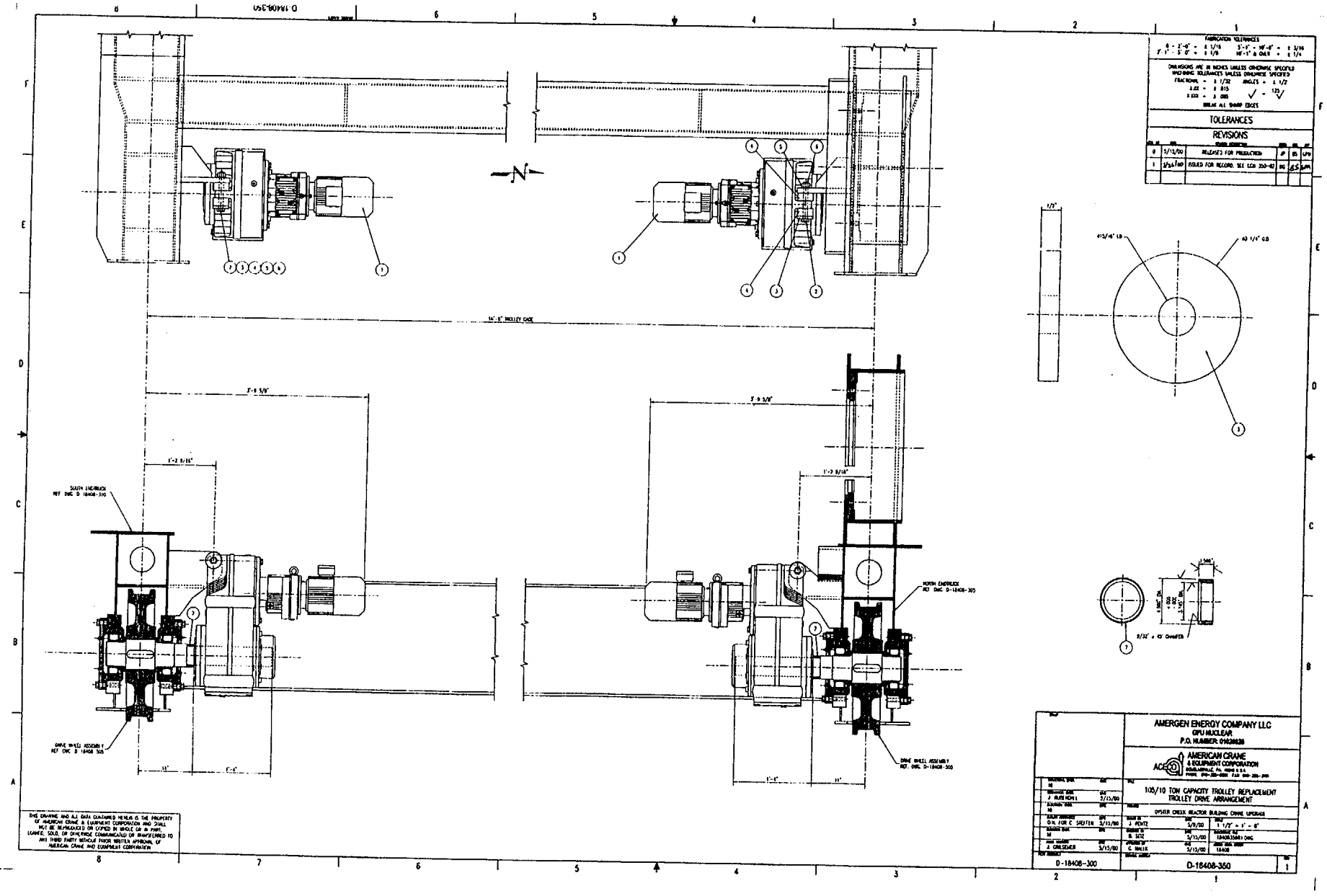
FABRICATION TOLERANCES
DIMENSIONS ARE IN INCHES UNLESS OTHERWISE SPECIFIED
BREAK ALL SHARP EDGES
TOLERANCES
REVISIONS
RELEASED FOR PRODUCTION
ISSUED FOR RECORD, SEE LCN 350-42
14'-0" TROLLEY GAGE
SOUTH ENDTRUCK REF DWG D-18408-310
NORTH ENDTRUCK REF DWG D-18408-305
DRIVE WHEEL ASSEMBLY REF DWG D-18408-305
AMERGEN ENERGY COMPANY LLC
GPU NUCLEAR
AMERICAN CRANE & EQUIPMENT CORPORATION
105/10 TON CAPACITY TROLLEY REPLACEMENT
TROLLEY DRIVE ARRANGEMENT
OYSTER CREEK REACTOR BUILDING CRANE UPGRADE
D-18408-300
D-18408-350
THIS DRAWING AND ALL DATA CONTAINED HEREIN IS THE PROPERTY OF AMERICAN CRANE & EQUIPMENT CORPORATION AND SHALL NOT BE REPRODUCED OR COPIED IN WHOLE OR IN PART, LOANED, SOLD, OR OTHERWISE COMMUNICATED OR TRANSFERRED TO ANY THIRD PARTY WITHOUT PRIOR WRITTEN APPROVAL OF AMERICAN CRANE AND EQUIPMENT CORPORATION.

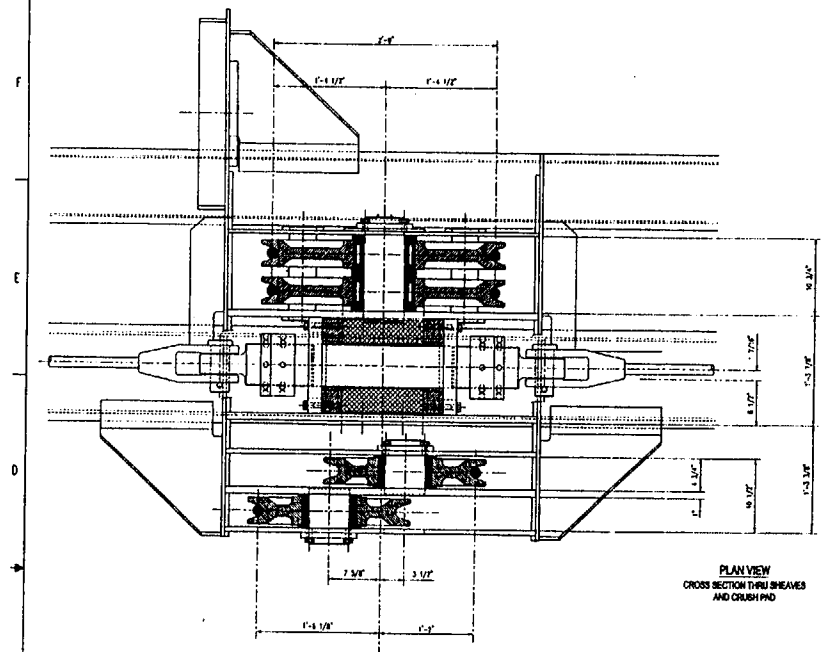

PLAN VIEW
CROSS SECTION THRU SHEAVES AND CRUSH PAD

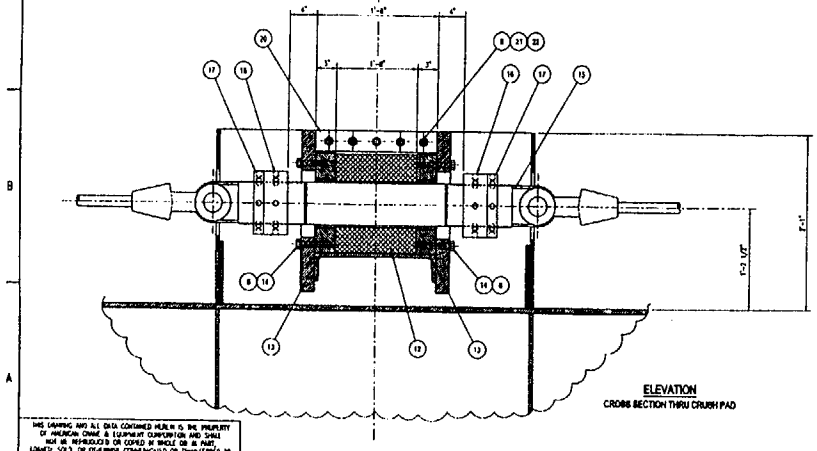

ELEVATION
CROSS SECTION THRU CRUSH PAD

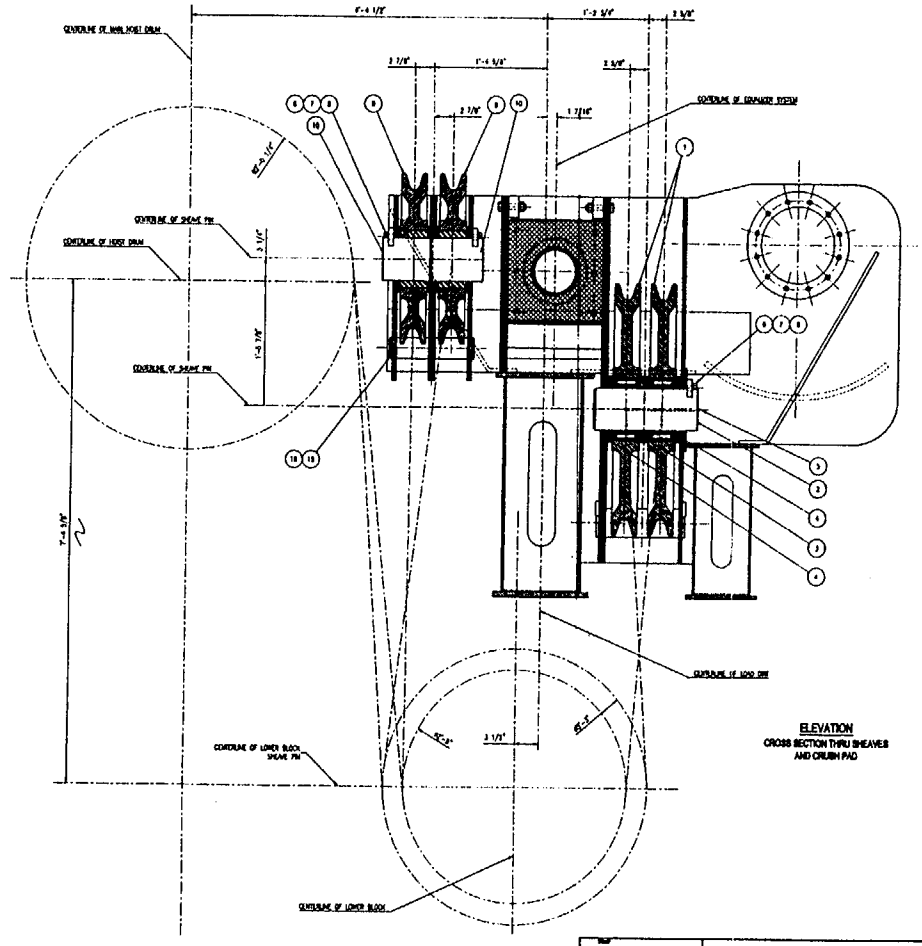

ELEVATION
CROSS SECTION THRU SHEAVES AND CRUSH PAD

THIS DRAWING AND ALL DATA CONTAINED HEREIN IS THE PROPERTY OF AMERICAN CRANE & EQUIPMENT CORPORATION AND SHALL NOT BE REPRODUCED OR COPIED IN WHOLE OR IN PART, LOANED, SOLD, OR OTHERWISE COMMUNICATED OR TRANSFERRED TO ANY THIRD PARTY WITHOUT PRIOR WRITTEN APPROVAL OF AMERICAN CRANE AND EQUIPMENT CORPORATION.

REV	DATE	REVISIONS	DR	CK	APP
1	7/16/90	ISSUED FOR RECORD, SEE ECN 360-02	DG	GS	EWK
0	5/15/90	RELEASED FOR PRODUCTION	JP	RS	CPB

FABRICATION TOLERANCES
0 - 2'-0" = ± 1/16 2'-1" - 10'-0" = ± 3/16
2'-1" - 5'-0" = ± 1/8 10'-1" & OVER = ± 1/4

DIMENSIONS ARE IN INCHES UNLESS OTHERWISE SPECIFIED
MACHINING TOLERANCES UNLESS OTHERWISE SPECIFIED
FRACTIONAL = ± 1/32 ANGLES = ± 1/2
X.XX = ± .015
X.XXX = ± .005
BREAK ALL SHARP EDGES

TOLERANCES

DRAWN BY R. SCHMIDT	DATE 05/15/90	
DESIGNED BY J. RUBENDALL	DATE 5/15/90	
CHECKED BY M	DATE	
SALES ENGINEER O.H. POR C. STEPPEH	DATE 5/15/90	
APPROVED BY M	DATE	
DWG. ENGINEER J. GRESSMER	DATE 5/15/90	
DWG. CHECKED	DATE	

AMERGEN ENERGY COMPANY LLC
GPU NUCLEAR
P.O. NUMBER: 81028825

AMERICAN CRANE & EQUIPMENT CORPORATION
MAULBERRY, PA. 19555 U.S.A.
PHONE: 610-326-3000 FAX: 610-326-3010

105/10 TON CAPACITY TROLLEY REPLACEMENT
MAIN HOIST UPPER BLOCK ARRANGEMENT

OYSTER CREEK REACTOR BUILDING CRANE UPGRADE

DRAWN BY J. POORT	DATE 4/30/90	SCALE 1 1/2" = 1' - 0"	
DRAWING NO. R. SLIK	DATE 5/15/90	WORKSHEET NO. 18408.300001.DWG	
APPROVED BY C. BRUER	DATE 5/15/90	DRAWING SIZE 18408	

D-18408-300 REV 1

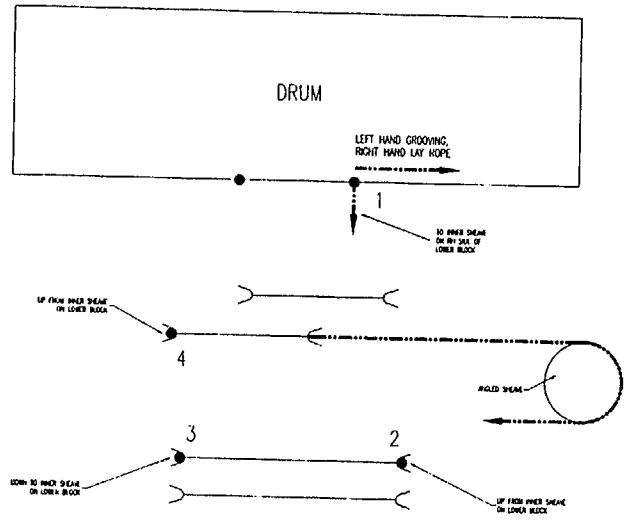

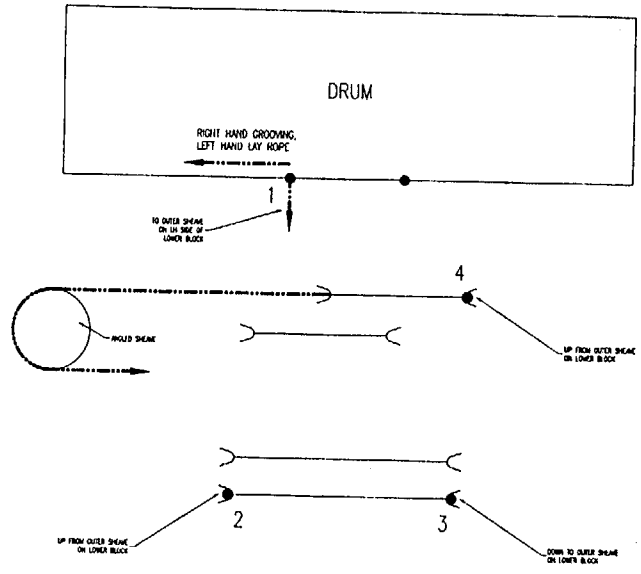

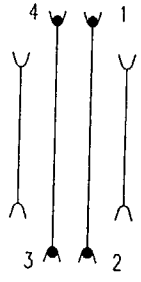

INNER SHEAVE REEVING

ACTUAL ROPE LENGTH = 561'-9 1/2"

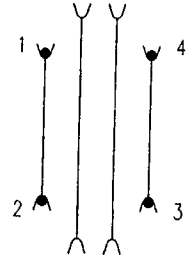

OUTER SHEAVE REEVING

ACTUAL ROPE LENGTH = 560'-5"

1	8/21/00	FOR RECORD	R	CJ	JMA
0	7/18/00	RELEASED FOR PRODUCTION	DO	JP	GPM

REVISIONS

FABRICATION TOLERANCES
0 - 2'-0" = ± 1/16 5'-1" - 10'-0" = ± 3/16
2'-1" - 5'-0" = ± 1/8 10'-1" & OVER = ± 1/4

DIMENSIONS ARE IN INCHES UNLESS OTHERWISE SPECIFIED
MACHINING TOLERANCES UNLESS OTHERWISE SPECIFIED
FRACTIONAL = ± 1/32 ANGLES = ± 1/2°
X.XX = ± .015
X.XXX = ± .005
BREAK ALL SHARP EDGES

TOLERANCES

DRAWN BY	J. RUBINCHALL	7/18/00
CHECKED BY	C. STUTTEN	7/18/00
APPROVED BY	J. CALLEMER	7/18/00

D-18406-300

AMERGEN ENERGY COMPANY LLC
GPU NUCLEAR
P.O. NUMBER: 01028625

AMERICAN CRANE
A EQUIPMENT CORPORATION
ROSELAND/NJ, PA. 07068 U.S.A.
PHONE: 973-226-0667 FAX: 973-226-2110

105/10 TON CAPACITY TROLLEY REPLACEMENT
MAIN HOIST REEVING DIAGRAM

PROJECT: OYSTER CREEK REACTOR BUILDING CRANE UPGRADE

DRAWN BY	B. CROSS	7/18/00	SCALE: 1 1/2" = 1' - 0"
DESIGNED BY	J. PEKOZ	7/18/00	DRAWING NO. 184063-180-D06
APPROVED BY	C. WALTZ	7/18/00	DRAWING SIZE: 18406

D-18406-380 REV 1

THIS DRAWING AND ALL DATA CONTAINED HEREIN IS THE PROPERTY OF AMERICAN CRANE & EQUIPMENT CORPORATION AND SHALL NOT BE REPRODUCED OR COPIED IN WHOLE OR IN PART, LOANED, SOLD, OR OTHERWISE COMMUNICATED OR MADE/USED TO ANY THIRD PARTY WITHOUT PRIOR WRITTEN APPROVAL OF AMERICAN CRANE AND EQUIPMENT CORPORATION.

D-18408-620

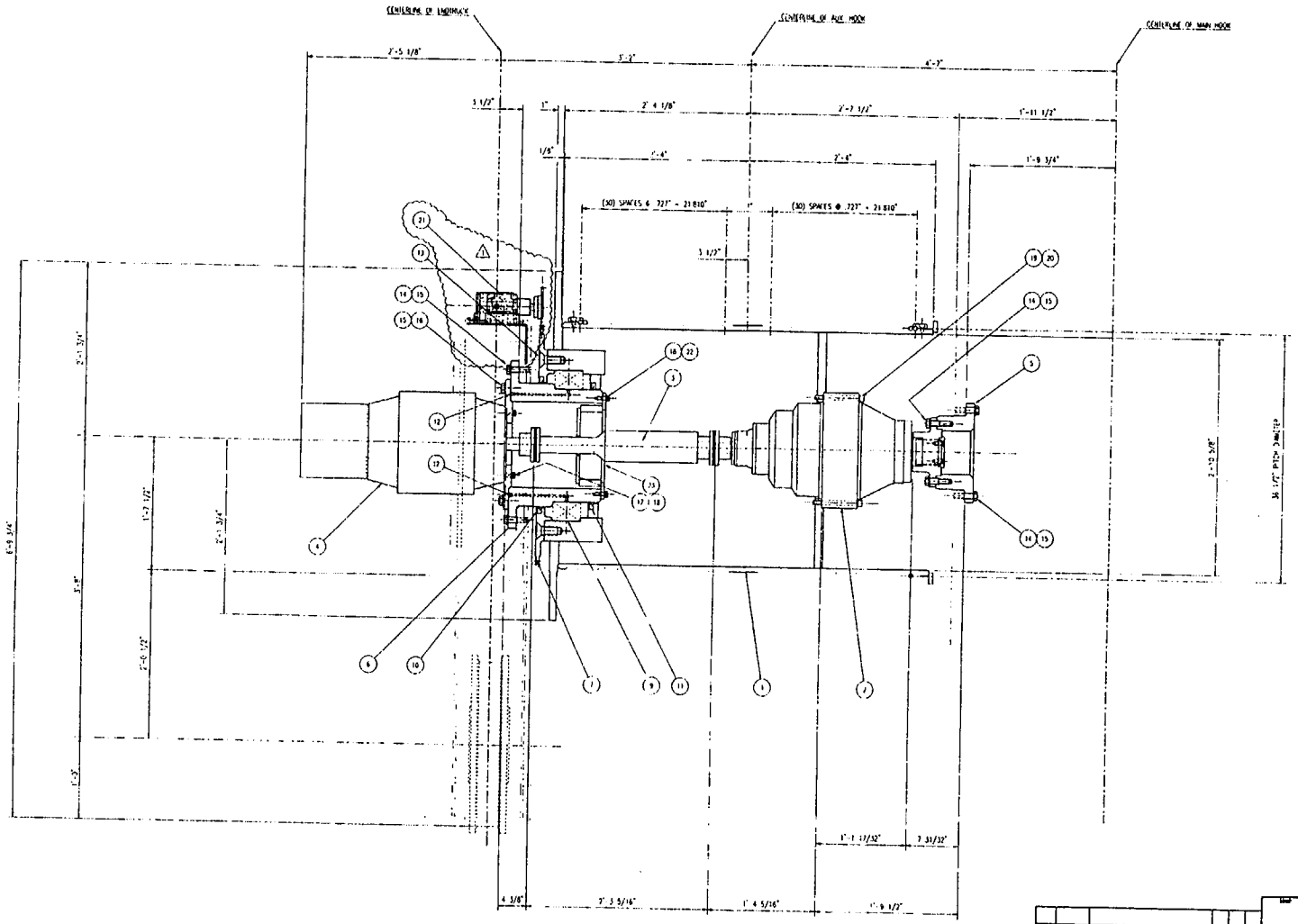

ELEVATION VIEW

SECTION THRU CENTERLINE OF DRUM

NON-CONTROLLED COPY

REV NO	DATE	REVISION DESCRIPTION	DRAWN	CHK	APP
1		UPDATE TO DETAILS, SEE ECN #A20-07	DG	DD	GPM
0	6/5/00	RELEASED FOR PRODUCTION	DG	BS	GPM

REVISIONS

FABRICATION TOLERANCES

0 - 2'-0" = ± 1/16 5'-1" - 10'-0" = ± 3/16
2'-1" - 5'-0" = ± 1/8 10'-1" & OVER = ± 1/4

DIMENSIONS ARE IN INCHES UNLESS OTHERWISE SPECIFIED
MACHINING TOLERANCES UNLESS OTHERWISE SPECIFIED
FRACTIONAL = ± 1/32 ANGLES = ± 1/2
X.XX = ± .015 ✓ = 125 ✓
X.XXX = ± .005
BREAK ALL SHARP EDGES

TOLERANCES

DRAWN BY J. RUBENDALL	DATE 06/5/00	
CHECKED BY C. STEFFEN	DATE 06/05/00	
ENGINEER J. GRESEMER	DATE 6/5/00	
REV NUMBER D-18408-300		

AMERGEN ENERGY COMPANY LLC
OPU NUCLEAR
P.O. NUMBER: 01028025

AMERICAN CRANE & EQUIPMENT CORPORATION
ROSELAND, N.J. PA 19010 U.S.A.
PHONE 610-386-6000 FAX 610-386-3496

105/10 TON CAPACITY TROLLEY REPLACEMENT
AUX. HOIST MACHINERY ARRANGEMENT

PROJECT OYSTER CREEK REACTOR BUILDING CRANE UPGRADE		
DRAWN BY J. PEREZ	DATE 02/11/00	SCALE 1 1/2" = 1' - 0"
CHECKED BY B. SUTZ	DATE 6/5/00	DRAWING NO. 18408D620R1.DWG
APPROVED BY G. MALEK	DATE 6/5/00	REF DWG 18408
DRAWING NUMBER D-18408-620		REV 1

THIS DRAWING AND ALL DATA CONTAINED HEREIN IS THE PROPERTY OF AMERICAN CRANE & EQUIPMENT CORPORATION AND SHALL NOT BE REPRODUCED OR COPIED IN WHOLE OR IN PART, LOANED, SOLD OR OTHERWISE COMMUNICATED OR TRANSFERRED TO ANY THIRD PARTY WITHOUT PRIOR WRITTEN APPROVAL OF AMERICAN CRANE AND EQUIPMENT CORPORATION.

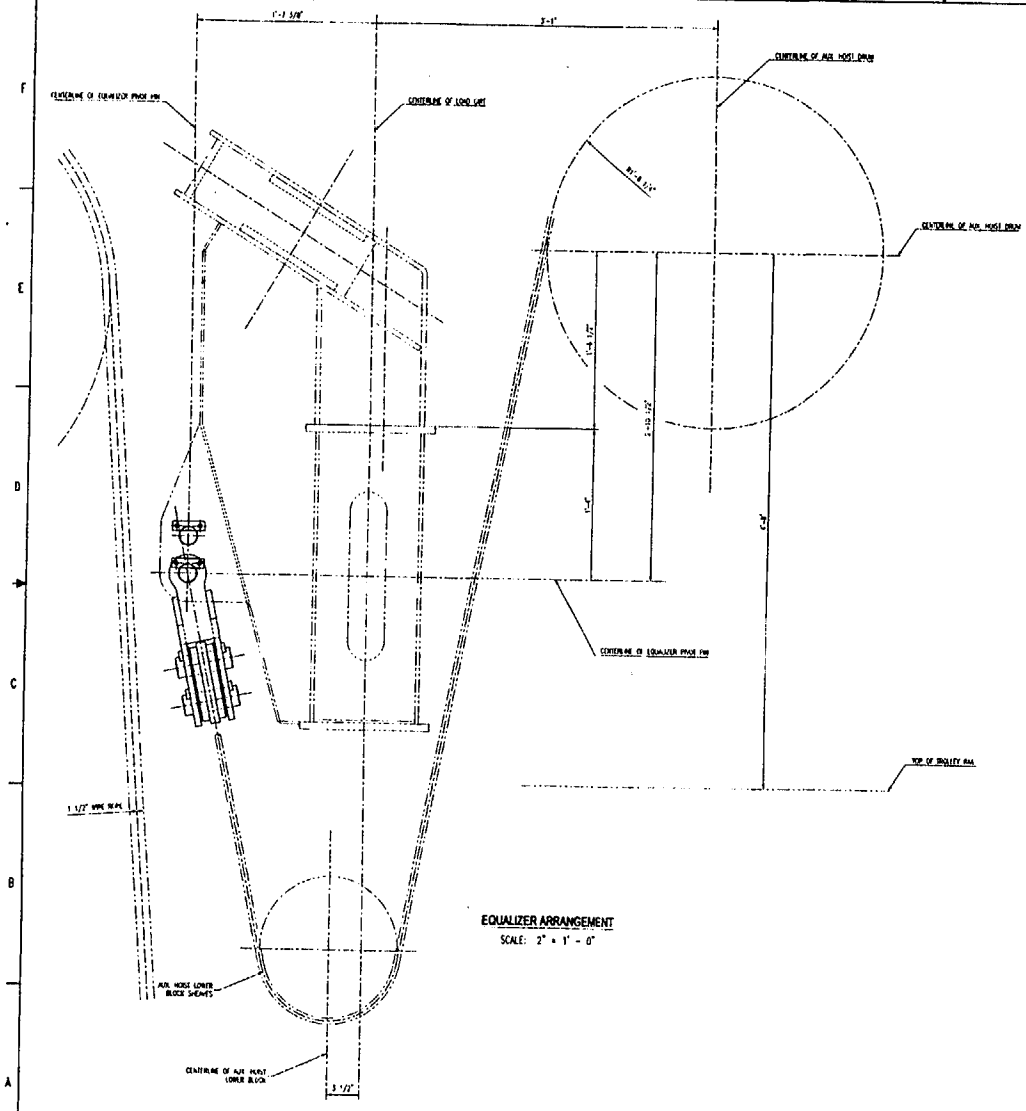

EQUALIZER ARRANGEMENT
SCALE: 2" = 1' - 0"

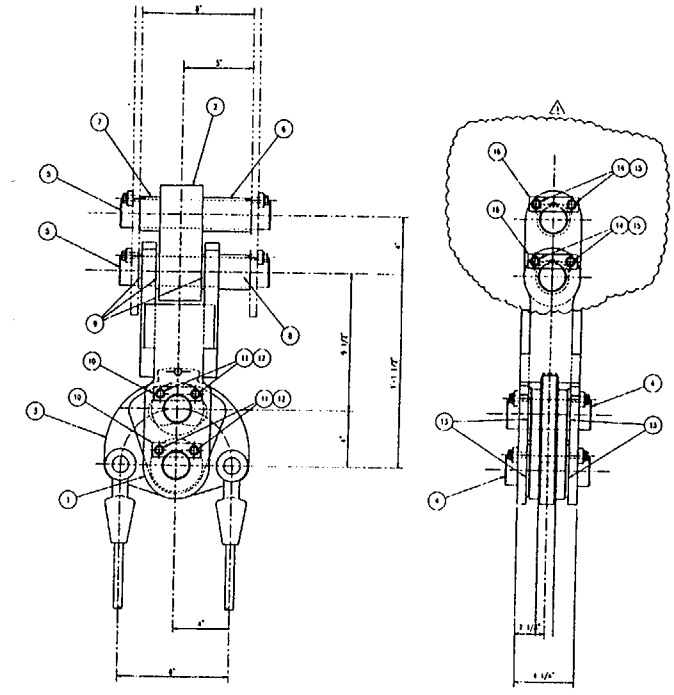

EQUALIZER ASSEMBLY
SCALE: 3" = 1' - 0"

THIS DRAWING AND ALL DATA CONTAINED HEREIN IS THE PROPERTY OF AMERICAN CRANE & EQUIPMENT CORPORATION AND SHALL NOT BE REPRODUCED OR COPIED IN WHOLE OR IN PART, LOANED, SOLD, OR OTHERWISE COMMUNICATED OR TRANSFERRED TO ANY THIRD PARTY WITHOUT PRIOR WRITTEN APPROVAL OF AMERICAN CRANE AND EQUIPMENT CORPORATION.

REV NO	DATE	REVISION DESCRIPTION	DRAWN	CHK	APP
1	7/24/00	ADD #14, #15, #16, SEE ECN #660-01	CC		CPM
0	6/5/00	RELEASED FOR PRODUCTION	DC	JP	CPM

REVISIONS

FABRICATION TOLERANCES
0 - 2'-0" = ± 1/16 5'-1" - 10'-0" = ± 3/16
2'-1" - 5'-0" = ± 1/8 10'-1" & OVER = ± 1/4

DIMENSIONS ARE IN INCHES UNLESS OTHERWISE SPECIFIED
MACHINING TOLERANCES UNLESS OTHERWISE SPECIFIED
FRACTIONAL = ± 1/32 ANGLES = ± 1/2°
3 PLC = ± .015
2 PLC = ± .005
BREAK ALL SHARP EDGES
125

TOLERANCES

DESIGNED BY M	DATE	
DRAWN BY J. BUKEHOLL	DATE 6/5/00	
ENGINEER BY M	DATE	
WEIGHT REFERENCE C. SUELTER	DATE 06/06/00	
ENGINEER CHK M	DATE	
PROJ. ENGR. J. CHRESCHER	DATE 6/5/00	
APPROVED BY C. MALEK	DATE 6/5/00	

D-18408-300

AMERGEN ENERGY COMPANY LLC
GPU NUCLEAR
P.O. NUMBER: 01022802S

AMERICAN CRANE & EQUIPMENT CORPORATION
MOUNTAINVILLE, PA. 19360 U.S.A.
PHONE: 610-286-0601 FAX 610 286-2416

TITLE
105/10 TON CAPACITY TROLLEY REPLACEMENT
AUX. HOIST EQUALIZER ARRANGEMENT

PROJECT
OYSTER CREEK REACTOR BUILDING CRANE UPGRADE

DRAWN BY A. PENTZ	DATE 3/13/00	SCALE 3" = 1' - 0"
REVIEWED BY D. GROSS	DATE 6/5/00	REFERENCE DWG 18408-300
APPROVED BY C. MALEK	DATE 6/5/00	PROJECT DWG NUMBER 18408

D-18408-660

REV. 1

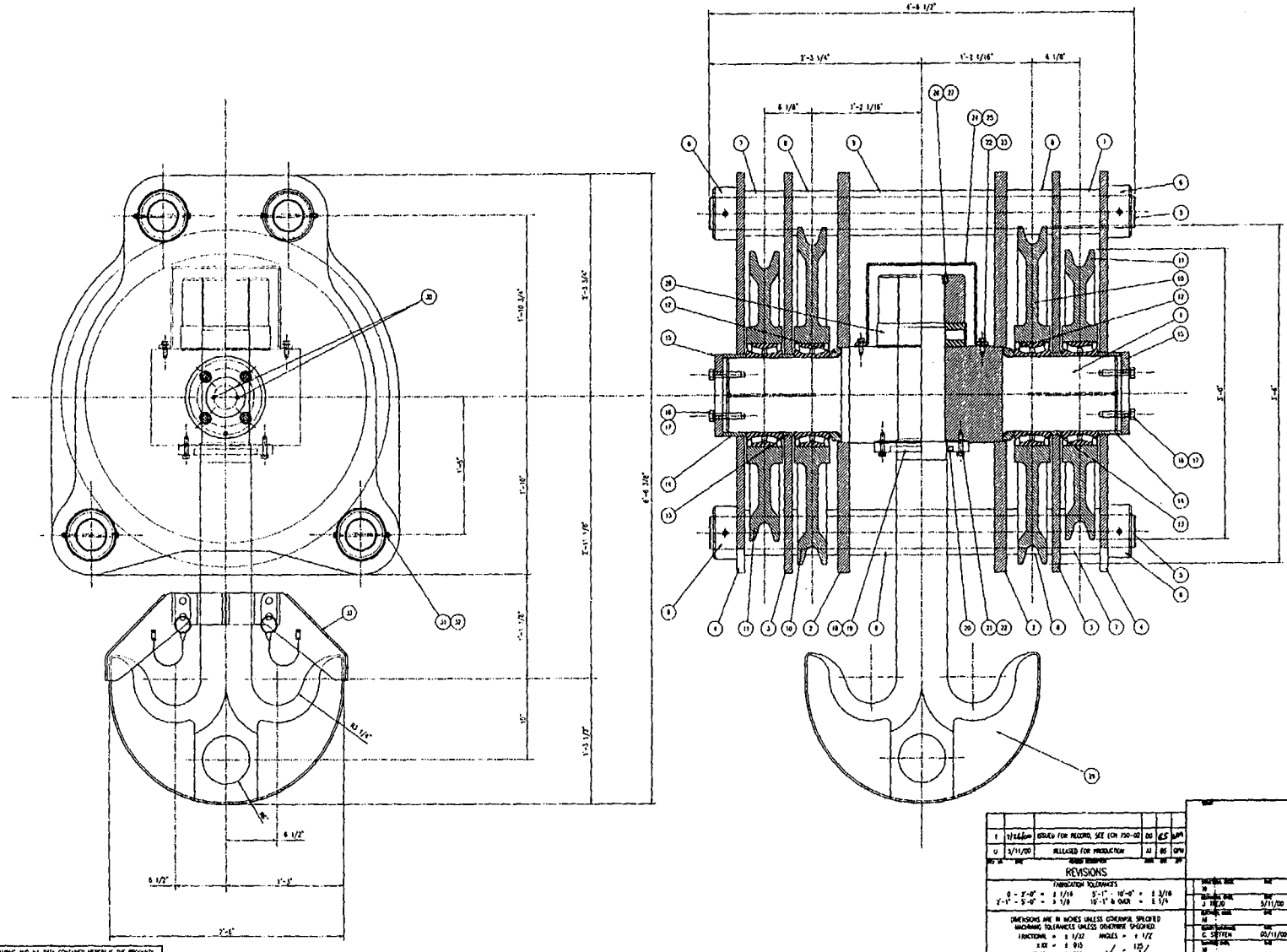

DESIGNED FOR 125 TON MCL

REV	DATE	REVISIONS	DR	CK	APP
T	7/26/00	ISSUED FOR RECORD, SEE ECN 750-02	DG	CS	MPA
U	3/11/00	RELEASED FOR PRODUCTION	AJ	BS	GPN

FABRICATION TOLERANCES
0 - 2'-0" = ± 1/16 5'-1" - 10'-0" = ± 3/16
2'-1" - 5'-0" = ± 1/8 10'-1" & OVER = ± 1/4

DIMENSIONS ARE IN INCHES UNLESS OTHERWISE SPECIFIED
MACHINING TOLERANCES UNLESS OTHERWISE SPECIFIED
FRACTIONAL = ± 1/32 ANGLES = ± 1/2°
X.XX = ± .015
X.XXX = ± .005
BREAK ALL SHARP EDGES
125

TOLERANCES

MATERIAL
N/A
J. TELLO 3/11/00
N/A
C. SETTEN 03/11/00
N/A
J. GRIESEMER 3/11/00
D-18408-300

AMERGEN ENERGY COMPANY LLC
GPU NUCLEAR
P.O. NUMBER: 01028625

AMERICAN CRANE & EQUIPMENT CORPORATION
KOZLOWNSVILLE, PA. 19549 U.S.A.

105/10 TON CAPACITY TROLLEY REPLACEMENT
LOWER BLOCK ASSEMBLY

OYSTER CREEK REACTOR BUILDING CRANE UPGRADE

J. PEARZ 03/08/00 1" = 1' - 6"
B. SILAI 3/11/00 18408CR01.DWG
G. MALEK 3/11/00 18408
D-18408-750 REV 1

THIS DRAWING AND ALL DATA CONTAINED HEREIN IS THE PROPERTY OF AMERICAN CRANE & EQUIPMENT CORPORATION AND SHALL NOT BE REPRODUCED OR COPIED IN WHOLE OR IN PART, LOANED, SOLD, OR OTHERWISE COMMUNICATED OR TRANSFERRED TO ANY THIRD PARTY WITHOUT PRIOR WRITTEN APPROVAL OF AMERICAN CRANE AND EQUIPMENT CORPORATION

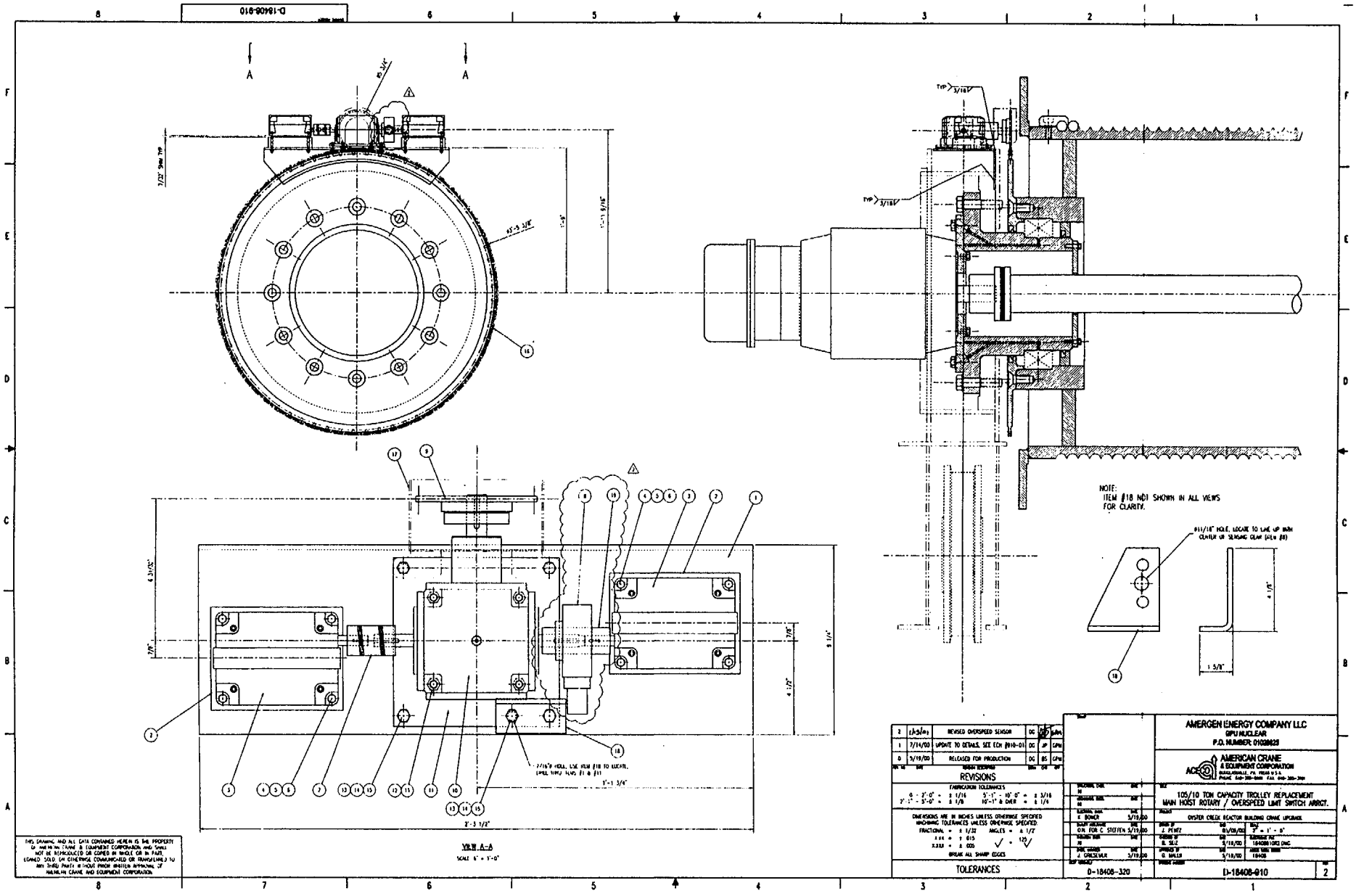
D-18408-910
A
A
TYP 3/16
TYP 3/16
NOTE:
ITEM #18 NOT SHOWN IN ALL VIEWS
FOR CLARITY.
11/16" HOLE, LOCATE TO LINE UP WITH
CENTER OF SENSING CLAW (SEE #8)
7/16" HOLE, USE ITEM #18 TO LOCATE.
DRILL WITH JIGS #11 & #11
1'-1 3/4"
2'-3 1/2"
VIEW A-A
SCALE 6" = 1'-0"
2 | 12-5-00 | REVISED OVERSPEED SENSOR | DG | BS | GPM
1 | 7/14/00 | UPDATE TO DETAILS, SEE ECN #010-01 | DG | JP | GPM
0 | 5/19/00 | RELEASED FOR PRODUCTION | DG | BS | GPM
REVISIONS
FABRICATION TOLERANCES
0 - 2'-0" = ± 1/16
2'-1" - 5'-0" = ± 1/8
5'-1" - 10'-0" = ± 3/16
10'-1" & OVER = ± 1/4
DIMENSIONS ARE IN INCHES UNLESS OTHERWISE SPECIFIED
MACHINING TOLERANCES UNLESS OTHERWISE SPECIFIED
FRACTIONAL = ± 1/32
ANGLES = ± 1/2°
.XX = ± .015
.XXX = ± .005
125
BREAK ALL SHARP EDGES
TOLERANCES
D-18408-320
AMERGEN ENERGY COMPANY LLC
GPU NUCLEAR
P.O. NUMBER: 01028025
AMERICAN CRANE
& EQUIPMENT CORPORATION
105/10 TON CAPACITY TROLLEY REPLACEMENT
MAIN HOIST ROTARY / OVERSPEED LIMIT SWITCH ARRGT.
OYSTER CREEK REACTOR BUILDING CRANE UPGRADE
K. BONER 5/19/00
DR. FOR C. STEFFEN 5/19/00
J. PEWTZ 6/09/00
2 = 1' - 0"
B. SILZ 5/19/00
J. GRISCMUK 5/19/00
G. WALSH 5/19/00
D-18408-910
2
THIS DRAWING AND ALL DATA CONTAINED HEREIN IS THE PROPERTY OF AMERICAN CRANE & EQUIPMENT CORPORATION AND SHALL NOT BE REPRODUCED OR COPIED IN WHOLE OR IN PART, LOANED, SOLD OR OTHERWISE COMMUNICATED OR TRANSFERRED TO ANY THIRD PARTY WITHOUT PRIOR WRITTEN APPROVAL OF AMERICAN CRANE AND EQUIPMENT CORPORATION.

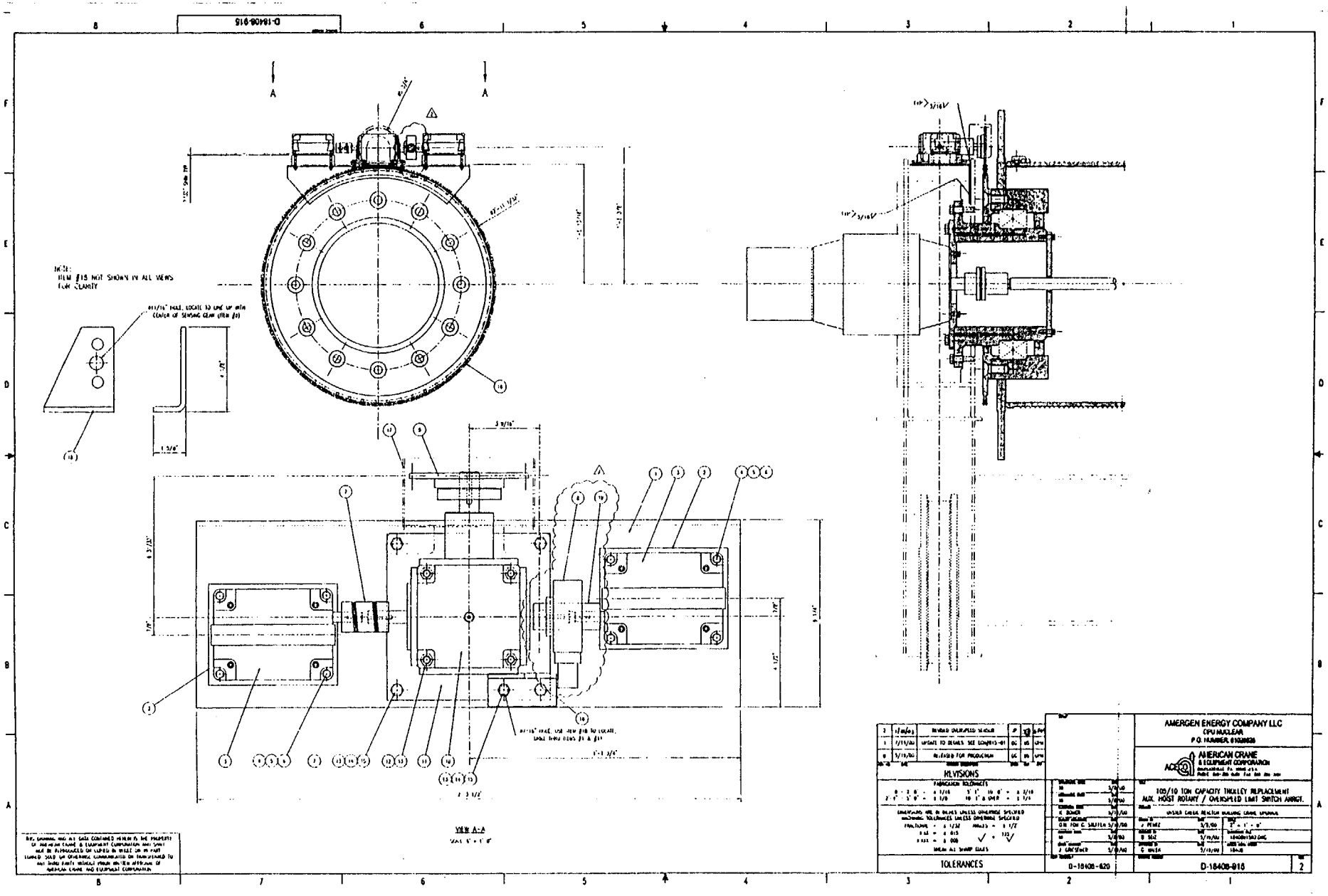
D-18408-915
NOTE:
ITEM #15 NOT SHOWN IN ALL VIEWS FOR CLARITY
VIEW A-A
REVISIONS
TOLERANCES
D-18408-620
AMERGEN ENERGY COMPANY LLC
CPU NUCLEAR
AMERICAN CRANE & EQUIPMENT CORPORATION
105/10 TON CAPACITY TROLLEY REPLACEMENT
AUX. HOIST ROTARY / OVERSPEED LIMIT SWITCH ARRGT.
D-18408-915

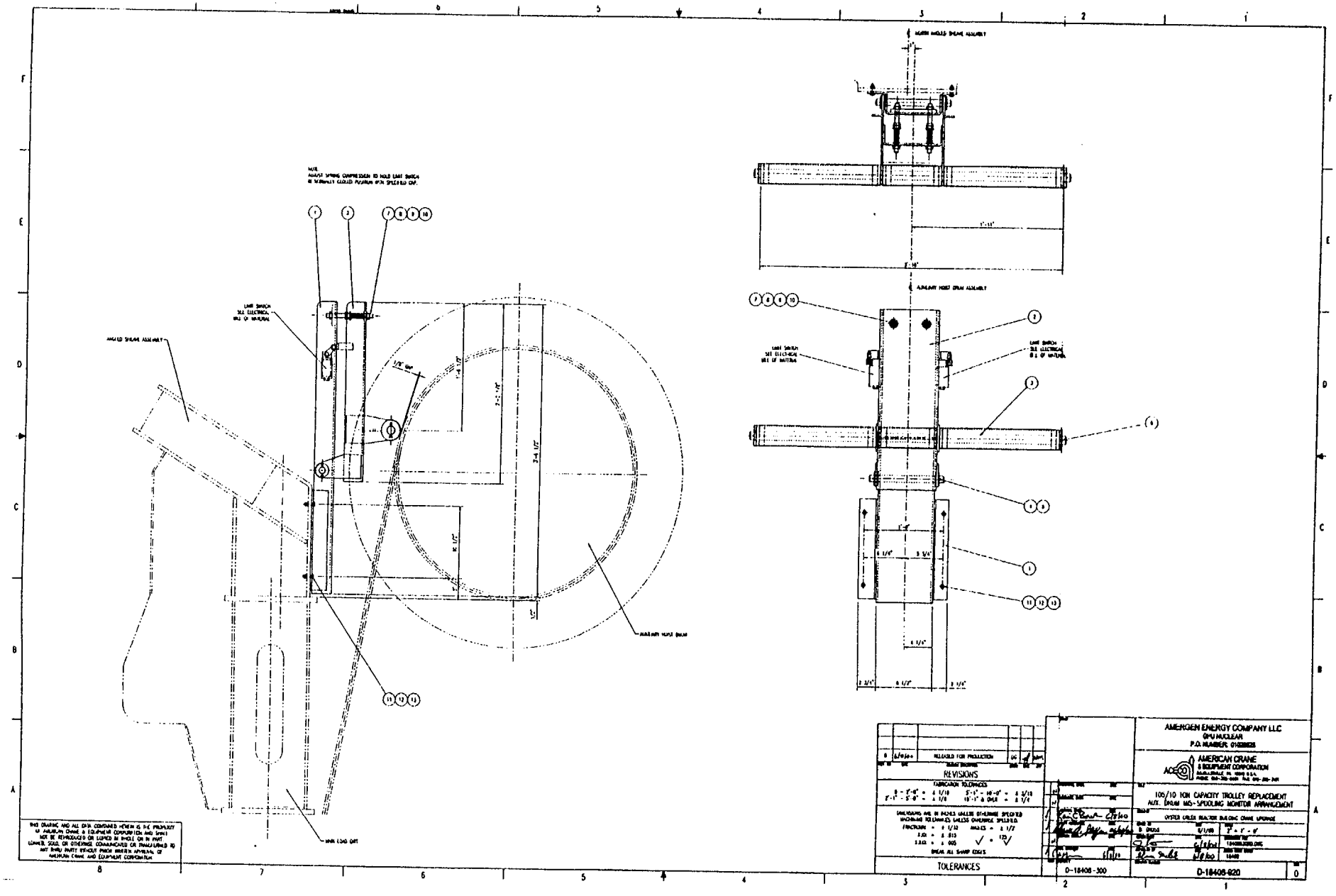
NOTE:
AVOID SPRING COMPRESSION TO HOLD LINE SHAFT
IN VERTICALLY COILED POSITION UPON SPOOLING OFF.
LINE SHAFT
SEE ELECTRICAL
BILL OF MATERIAL
ANGLED SHEAVE ASSEMBLY
AUXILIARY HOIST DRUM
MAIN LOAD DRUM
MAIN HOIST SHEAVE ASSEMBLY
AUXILIARY HOIST DRUM ASSEMBLY
REVISIONS
RELEASED FOR PRODUCTION
FABRICATION TOLERANCES
TOLERANCES
AMERGEN ENERGY COMPANY LLC
GPU NUCLEAR
AMERICAN CRANE
& EQUIPMENT CORPORATION
105/10 TON CAPACITY TROLLEY REPLACEMENT
AUX. DRUM MIS-SPOOLING MONITOR ARRANGEMENT
D-18408-300
D-18408-920
0

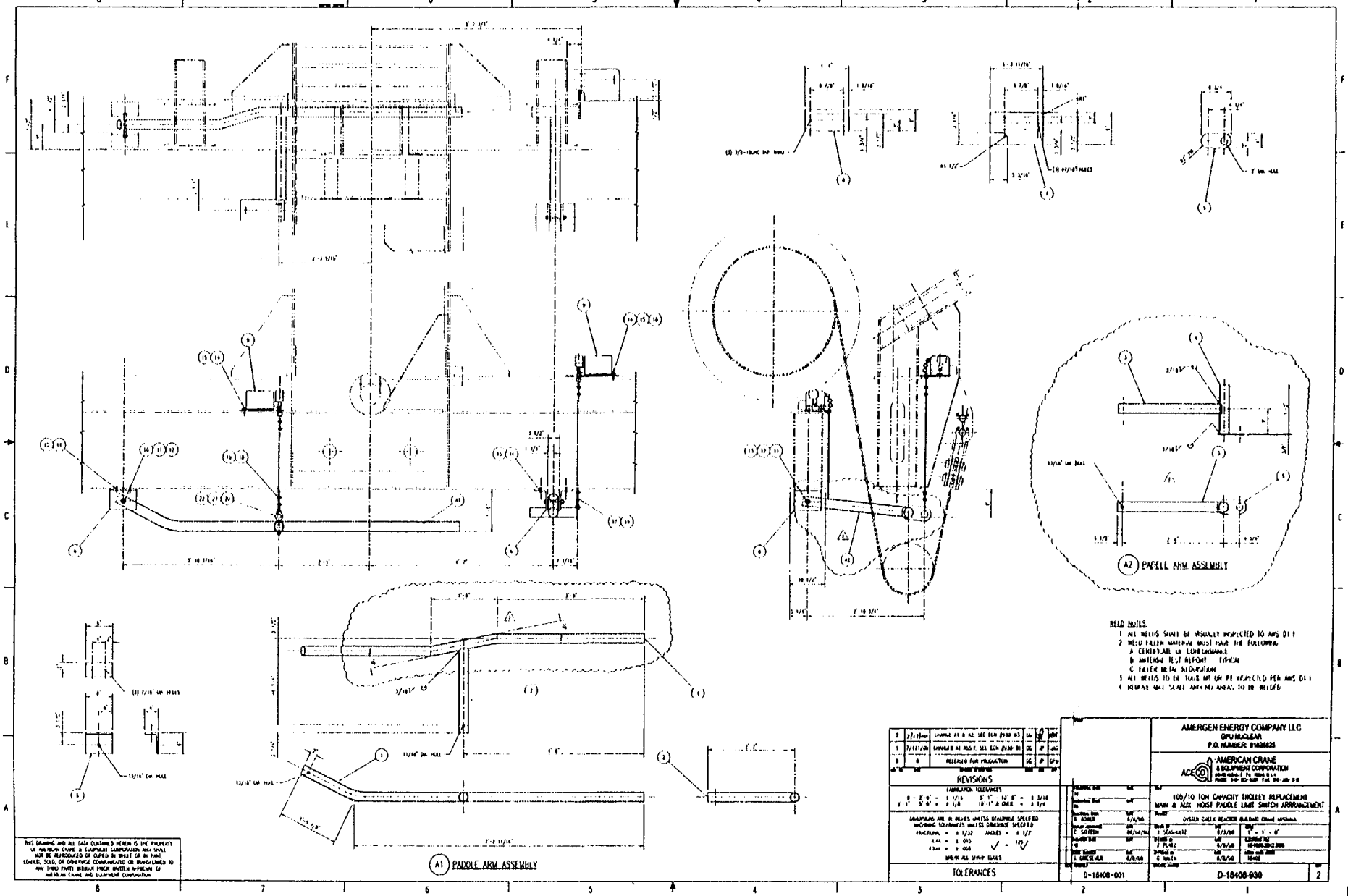
A1 PADDLE ARM ASSEMBLY
A2 PADDLE ARM ASSEMBLY
WELD NOTES
1 ALL WELDS SHALL BE VISUALLY INSPECTED TO AWS D1.1
2 WELD FILLER MATERIAL MUST HAVE THE FOLLOWING
A CERTIFICATE OF CONFORMANCE
B MATERIAL TEST REPORT TYPICAL
C FILLER METAL SPECIFICATION
3 ALL WELDS TO BE 100% MT OR PT INSPECTED PER AWS D1.1
4 REMOVE MILL SCALE AND FOREIGN AREAS TO BE WELDED
REVISIONS
TOLERANCES
AMERGEN ENERGY COMPANY LLC
GPU NUCLEAR
AMERICAN CRANE & EQUIPMENT CORPORATION
100/10 TON CAPACITY TROLLEY REPLACEMENT
MAIN & AUX HOIST PADDLE LIMIT SWITCH ARRANGEMENT
D-18408-001
D-18408-930
2

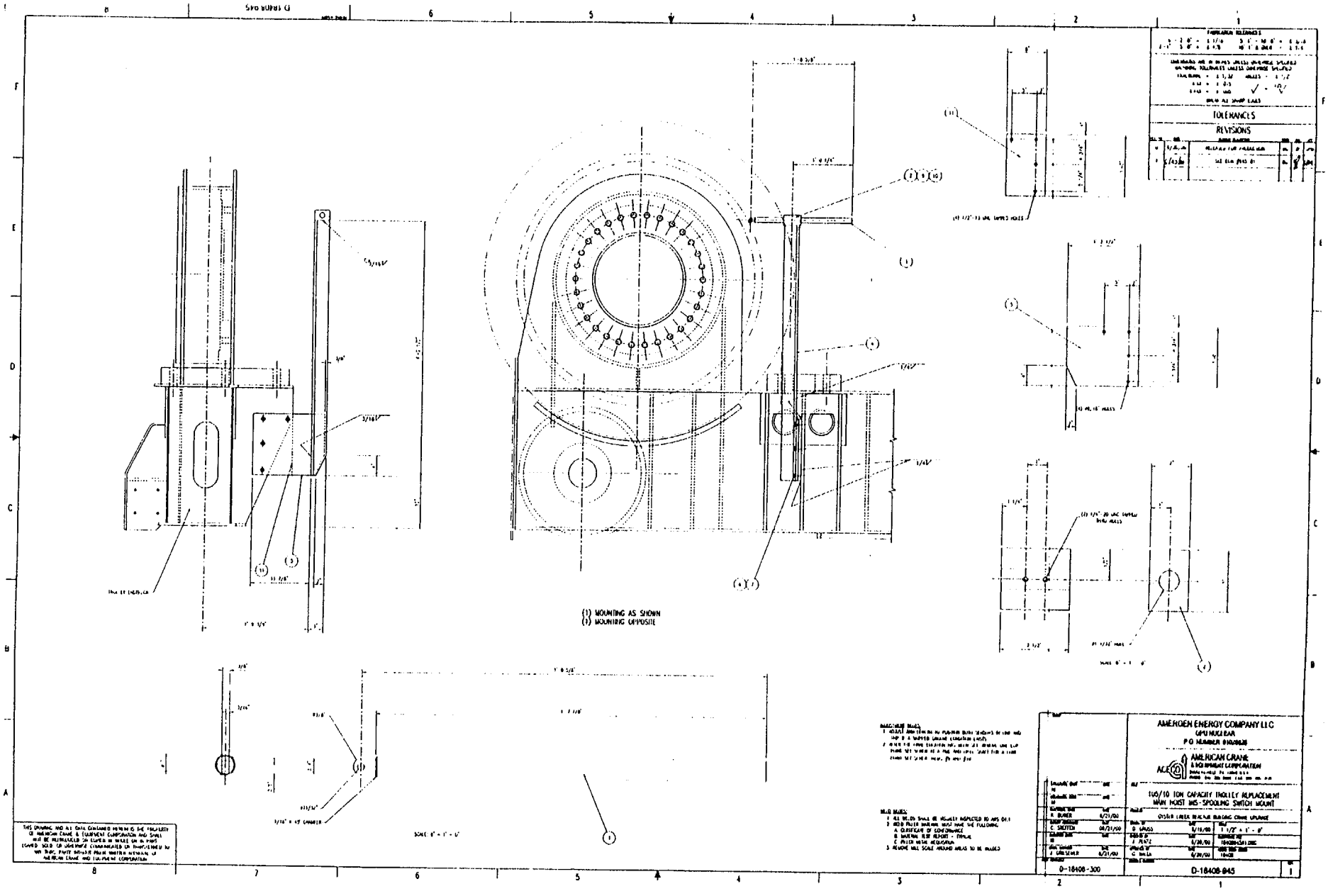
TOLERANCES
REVISIONS
(1) MOUNTING AS SHOWN
(2) MOUNTING OPPOSITE
AMERGEN ENERGY COMPANY LLC
GPU NUCLEAR
AMERICAN CRANE
& EQUIPMENT CORPORATION
150/10 TON CAPACITY TROLLEY REPLACEMENT
MAIN HOIST WIS-SPOOLING SWITCH MOUNT
D-18408-300
D-18408-845

D-18408-800-2

GENERAL NOTES AND SYMBOLS/DEVICE TAG INDEX

GENERAL NOTES

1. ALL COMPONENTS LOCATED WITHIN CONTROL CABINETS AS DESIGNATED BY CRANE MOTION UNLESS NOTED ON DRAWING. REFER TO PHYSICAL LAYOUT & INTERCONNECTION DIAGRAMS FOR ACTUAL PHYSICAL MOUNTING LOCATION.
2. ALL CONTACTOR AND/OR RELAY COILS TO BE PARALLELED WITH AN RC NETWORK EXCEPT FOR LOAD DEVICES CONNECTED TO THE PLC TRIAC OUTPUTS. LOAD DEVICES ON PLC TRIAC OUTPUTS SHALL BE PARALLELED WITH SURGE SUPPRESSORS TYPE V220MA2A.
3. ALL PANELBOARD WIRING TO BE TYPE SIS.
4. ALL SHIELDS ON TWISTED PAIR CABLES TO BE TAPED BACK UNLESS OTHERWISE NOTED ON DRAWING.
5. POTENTIOMETERS AND BANANA JACKS PROVIDED IN PLC CABINET FOR TESTING AND TUNING ADJUSTMENTS OF ROTARY INDUCTIVE MASTER CONTROLLERS. FINAL ADJUSTMENT REQUIRED IN FIELD TO OBTAIN 10 VDC MAXIMUM AT FULL SPEED.
6. DATALINER MESSAGE DISPLAY AND MODEM TO BE MOUNTED ON ELEV. 23'. MOUNTING LOCATION AND 120 VAC POWER SUPPLY TO BE PROVIDED BY CUSTOMER.
7. EXISTING EQUIPMENT TO BE REUSED INCLUDES:
   - BRIDGE NORTH/SOUTH LIMIT SWITCHES.
   - TROLLEY EAST/WEST LIMIT SWITCHES
   - CAB MOUNTED 120 VAC DISTRIBUTION PANEL & ASSOCIATED WIRING FOR EXISTING CRANE UTILITIES.
   - CRANE UTILITIES 5 KVA TRANSFORMER.
   - EXISTING CRANE RECEPTACLES AND WARNING BELL.
8. EXISTING FEED FROM 5 KVA XFMR TO 120 VAC DISTRIBUTION PANEL TO BE RE-ROUTED TO NEW XFMR LOCATION.

DEVICE TAG INDEX

TAG	DESCRIPTION
ACC	AIR COMPRESSOR CONTACTOR
ACOL	AIR COMPRESSOR THERMAL OVERLOAD RELAY
AHBC1	AUX. HOIST DISC BRAKE CONTACTOR
AHBLS	AUX. HOIST DRUM BRAKE RELEASE LIMIT SWITCH
AHBR1	AUX. HOIST R.I. MASTER CONTROLLER BRIDGE RECTIFIER
AHDF	AUX. HOIST DRIVE EXTERNAL FAULT RELAY
AHEPS	AUX. HOIST EQUALIZER MONITOR PROXIMITY SENSOR
AHLF	AUX. HOIST LINE FILTER
AHLLS	AUX. HOIST REDUNDANT LOW LIMIT SWITCH
AHLR	AUX. HOIST LINE REACTOR
AHMS	AUX. HOIST MODE SWITCH
AHOL	AUX. HOIST THERMAL OVERLOAD RELAY
AHPLS	AUX. HOIST POWER LIMIT SWITCH
AHR1	AUX. HOIST R.I. MASTER CONTROLLER RESISTOR
AHRM	AUX. HOIST ROTARY INDUCTIVE MASTER CONTROLLER
AHRLS1 - 2	AUX. HOIST WIRE ROPE MONITOR LIMIT SWITCHES
AHSD	AUX. HOIST DRUM SPEED DETECTOR
AHTLS	AUX. HOIST GEARED UP/DOWN TRAVEL LIMIT SWITCH
AHTP	AUX. HOIST MOTOR THERMAL PROTECTION
AHWLS	AUX. HOIST OVERWEIGHT LIMIT SWITCH
B1	BEACON - CRANE RADIO CONTROL SELECTED
B2	BEACON - MAIN OR AUX HOIST MIS-SPOOLING FAULT
B3	BEACON - MAIN OR AUX HOIST OVERSPEED FAULT
B4	BEACON - MAIN OR AUX HOIST AFD FAULT
B5	BEACON - MAIN OR AUX HOIST DISC BRAKE FAULT
B6	BEACON - MAIN OR AUX HOIST EQUALIZER FAULT
BBC	BRIDGE DISC BRAKE CONTACTOR
BBR1	BRIDGE R.I. MASTER CONTROLLER BRIDGE RECTIFIER
BCR1 - 2	LIMIT BYPASS CONTROL RELAYS
BLF	BRIDGE LINE FILTER
BLR	BRIDGE LINE REACTOR
BNLS	BRIDGE NORTH LIMIT SWITCH
BOL	BRIDGE THERMAL OVERLOAD RELAY
BR1	BRIDGE R.I. MASTER CONTROLLER RESISTOR
BRM	BRIDGE ROTARY INDUCTIVE MASTER CONTROLLER
BSLS	BRIDGE SOUTH LIMIT SWITCH
BTP	BRIDGE MOTOR THERMAL PROTECTION
CB1 - 15	480 & 120 VAC CIRCUIT BREAKERS 1 THRU 15
CCPOFF	CAB CONTROL POWER "OFF"
CCPON	CAB CONTROL POWER "ON"
CLBS	CAB LIMIT BYPASS SWITCH
CRTS	CAB/RADIO TRANSFER SWITCH
CT	THERMOSTAT - COOL SENSING
CT1	120 VAC CONTROL XFMR
CVT	120 VAC CONSTANT VOLTAGE CONTROL XFMR
DLMD	DATA-LINER MESSAGE DISPLAY
DPCB1 - 6	DISTRIBUTION PANEL EXISTING CIRCUIT BREAKERS
DPS	DUAL PRESSURE SWITCH
EBA	EARLY BREAK AUXILIARY CONTACT
EGB	EQUIPMENT GROUND BUS
F2	SYSTEM VOLTAGE MONITOR FUSE PROTECTION
FU2	A/C UNIT PRIMARY FUSE PROTECTION
FU4	A/C UNIT 120 VAC CONTROL XFMR FUSE PROTECTION

DEVICE TAG INDEX (CON'T)

TAG	DESCRIPTION
KSW1 - 5	KEY OPERATED SELECTOR SWITCH
L1	CAB POWER "ON" INDICATION PILOT LIGHT
LOLS	COMPRESSOR LOW OIL LIMIT SWITCH
M	MAINLINE CONTACTOR
MDM1	MESSAGE DISPLAY MODEM - ON CRANE BRIDGE
MDM2	MESSAGE DISPLAY MODEM - AT ELEV. 23'
MDMPS1	MESSAGE DISPLAY MODEM POWER SUPPLY - ON CRANE BRIDGE
MDMPS2	MESSAGE DISPLAY MODEM POWER SUPPLY - AT ELEV. 23'
MDS	MAIN DISCONNECT SWITCH
MDSCB	MAIN DISCONNECT SWITCH CIRCUIT BREAKER
MHBC1	MAIN HOIST DISC BRAKE CONTACTOR
MHBLS1 - 2	MAIN HOIST DRUM BRAKE RELEASE LIMIT SWITCHES
MHBR1	MAIN HOIST R.I. MASTER CONTROLLER BRIDGE RECTIFIER
MHDF	MAIN HOIST DRIVE EXTERNAL FAULT RELAY
MHEPS1 - 2	MAIN HOIST EQUALIZER MONITOR LIMIT SWITCHES
MHLF1,2	MAIN HOIST LINE FILTERS
MHLLS	MAIN HOIST REDUNDANT LOW LIMIT SWITCH
MHLR	MAIN HOIST LINE REACTOR
MHMS	MAIN HOIST MODE SWITCH
MHOL	MAIN HOIST THERMAL OVERLOAD RELAY
MHPLS	MAIN HOIST POWER LIMIT SWITCH
MHR1	MAIN HOIST R.I. MASTER CONTROLLER RESISTOR
MHRM	MAIN HOIST ROTARY INDUCTIVE MASTER CONTROLLER
MHSD	MAIN HOIST DRUM SPEED DETECTOR
MHTLS	MAIN HOIST GEARED UP/DOWN TRAVEL LIMIT SWITCH
MHTP	MAIN HOIST MOTOR THERMAL PROTECTION
MHWLS	MAIN HOIST OVERWEIGHT LIMIT SWITCH
MHWRM-E	MAIN HOIST WIRE ROPE MONITOR PHOTO SENSOR, EMITTER
MHWRM-R	MAIN HOIST WIRE ROPE MONITOR PHOTO SENSOR, RECEIVER
PB1 - 2	CONTROL PUSHBUTTONS
PLC503	PLC 5/03 PROCESSOR
PS	AIR COMPRESSOR CONTROL PRESSURE SWITCH
PS5DC	5 VDC POWER SUPPLY
PVFD	PANELVIEW FAULT DISPLAY
R1 - 24B	CONTROL RELAYS
RVFD	PANELVIEW FAULT DISPLAY
SDLF	SPEED DETECTOR POWER LINE FILTER
SDPS	SPEED DETECTOR POWER SUPPLY
SS1 - 3	SELECTOR SWITCH
SV1 - 2	SOLENOID VALVE
SVM	SYSTEM VOLTAGE MONITOR
TBC	TROLLEY BRAKE CONTACTOR
TBR1	TROLLEY R.I. MASTER CONTROLLER BRIDGE RECTIFIER
TELS	TROLLEY EAST LIMIT SWITCH
TLF	TROLLEY LINE FILTER
TLR	TROLLEY LINE REACTOR
TMR1 - 2	DELAY TIMER RELAYS
TOL	TROLLEY THERMAL OVERLOAD RELAY
TRM	TROLLEY ROTARY INDUCTIVE MASTER CONTROLLER
TTP	TROLLEY MOTOR THERMAL PROTECTION
TWLS	TROLLEY WEST LIMIT SWITCH
UT1	EXISTING UTILITY 5 KVA TRANSFORMER
WST	WEIGH SCALE "TARE FUNCTION" CONTROL RELAY

SYMBOLS

ROTARY INDUCTIVE XFMR

SURGE SUPRESSOR

CIRCUIT BREAKER (AMP)

FUSE (AMP)

PROXIMITY SENSOR

COIL W/ RC NETWORK IN PARALLEL

N.O. LIMIT SWITCH

SHIELDED TWISTED PAIR

OFF DELAY TIMER

N.C. LIMIT SWITCH

PRESSURE SWITCH

N.O. FOOT SWITCH

BRIDGE RECTIFIER

LOW OIL LEVEL LIMIT SWITCH (LOLS)

N.O. PUSHBUTTON

N.O. CONTACT

MOTOR WINDING THERMAL PROTECTOR

N.C. CONTACT

TWO POSITION SELECTOR SWITCH

THERMAL OVERLOAD RELAY (SET AT)

PILOT/BEACON INDICATOR LIGHT (DENOTES LENS COLOR)

ADJUSTABLE RESISTOR/ POTENTIOMETER (RESISTOR)

REV. NO.	DATE	REVISION DESCRIPTION	DRAWN BY	CHK BY	APP BY
4	10/3/00	ADD D.S. DETECTOR PWR LINE FILTER	HCB	JMW	GPM
3	9/14/00	ADD KSW5, R24, R24A, R24B	HCB	JMW	GPM
2	8/8/00	FOR RECORD	HCB	JMW	GPM
1	7/19/00	ADD LOLS	HCB	JMW	GPM
0	6/28/00	RELEASE FOR PRODUCTION	HCB	JMW	GPM

REVISIONS

AMERGEN ENERGY COMPANY
GPU NUCLEAR
P.O. NUMBER: 01028825

AMERICAN CRANE & EQUIPMENT CORPORATION
ELVERSON, PA. 19520 U.S.A.
PHONE: 610-286-8000 FAX: 610-286-3434

105/10 TON REACTOR BUILDING CRANE
GENERAL NOTES AND SYMBOLS/DEVICE TAG INDEX

OYSTER CREEK REACTOR BUILDING CRANE- TROLLEY REPLACEMENT

DRAWN BY: H.C. BOWER — DATE: 3/13/00 — SCALE: NTS
CHECKED BY: J. WALSH — DATE: 6/26/00
APPROVED BY: G. WALKE — DATE: 6/28/00 — CODE IDENT NO. 18408
DWG. NUMBER: D-18408-800-2 — REV. NO. 4

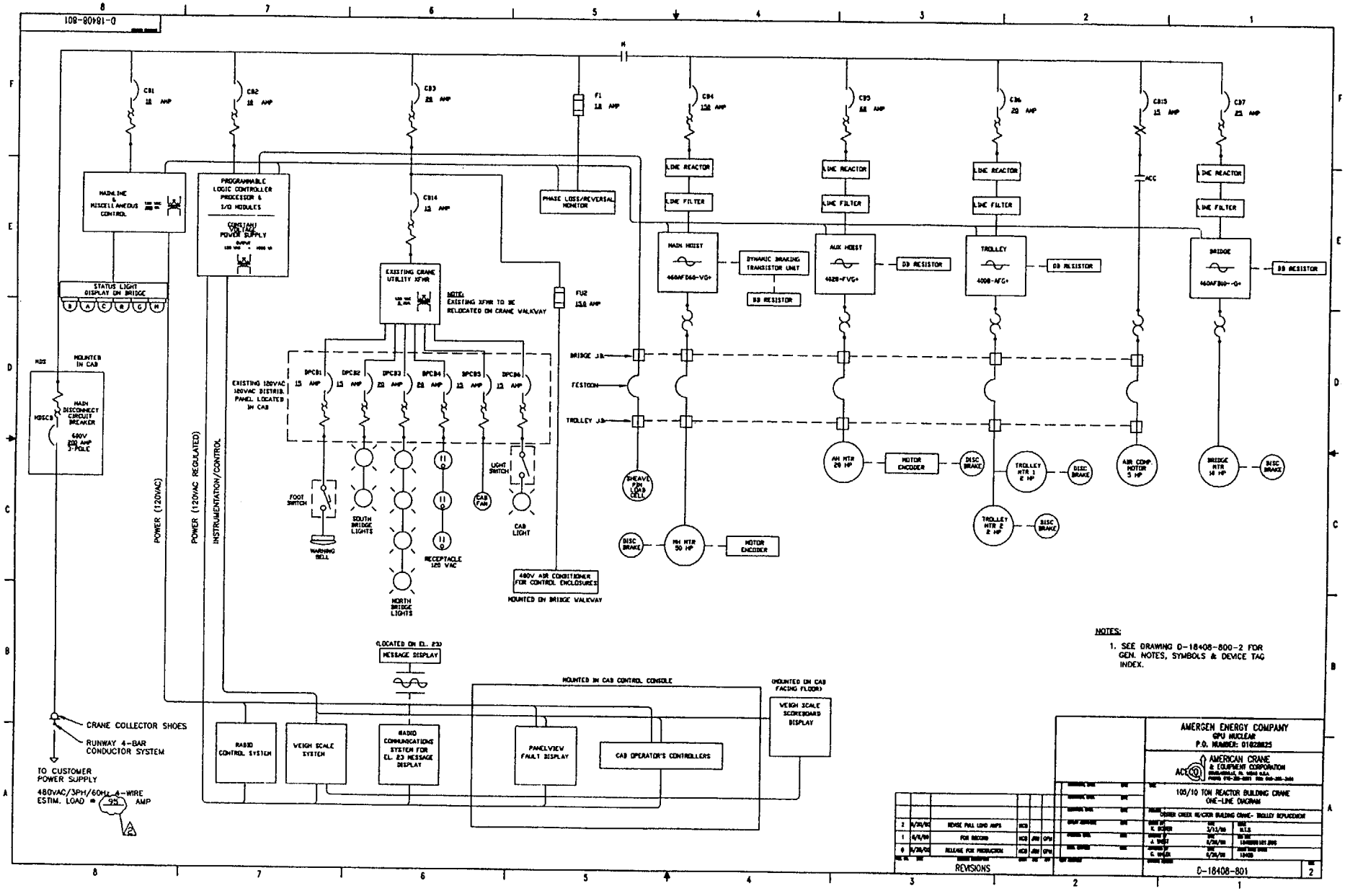
D-18408-801
CB1 10 AMP
CB2 10 AMP
CB3 20 AMP
F1 10 AMP
CB4 150 AMP
CB5 60 AMP
CB6 20 AMP
CB13 15 AMP
CB7 25 AMP
MAINLINE & MISCELLANEOUS CONTROL
PROGRAMMABLE LOGIC CONTROLLER PROCESSOR & I/O MODULES
CONTROL POWER SUPPLY
CB14 10 AMP
PHASE LOSS/REVERSAL MONITOR
LINE REACTOR
LINE FILTER
MAIN HOIST
DYNAMIC BRAKING TRANSISTOR UNIT
DB RESISTOR
AUX HOIST
TROLLEY
BRIDGE
ACC
STATUS LIGHT DISPLAY ON BRIDGE
EXISTING CRANE UTILITY XFMR
NOTE: EXISTING XFMR TO BE RELOCATED ON CRANE WALKWAY
FU2 150 AMP
MOUNTED IN CAB
MDS
MAIN DISCONNECT CIRCUIT BREAKER
MDSCB
600V 200 AMP 3-POLE
EXISTING 120VAC 120VAC DISTRIB. PANEL LOCATED IN CAB
DPCB1 15 AMP
DPCB2 15 AMP
DPCB3 20 AMP
DPCB4 20 AMP
DPCB5 15 AMP
DPCB6 15 AMP
BRIDGE J.B.
FESTOON
TROLLEY J.B.
SHEAVE PIN LOAD CELL
AH MTR 20 HP
MOTOR ENCODER
DISC BRAKE
TROLLEY MTR 1 2 HP
TROLLEY MTR 2 2 HP
AIR COMP. MOTOR 3 HP
BRIDGE MTR 14 HP
MH MTR 30 HP
FOOT SWITCH
WARNING BELL
SOUTH BRIDGE LIGHTS
NORTH BRIDGE LIGHTS
RECEPTACLE 120 VAC
CAB FAN
LIGHT SWITCH
CAB LIGHT
480V AIR CONDITIONER FOR CONTROL ENCLOSURES
MOUNTED ON BRIDGE WALKWAY
POWER (120VAC)
POWER (120VAC REGULATED)
INSTRUMENTATION/CONTROL
LOCATED ON EL. 23'
MESSAGE DISPLAY
MOUNTED IN CAB CONTROL CONSOLE
(MOUNTED ON CAB FACING FLOOR)
VEIGH SCALE SCOREBOARD DISPLAY
CRANE COLLECTOR SHOES
RUNWAY 4-BAR CONDUCTOR SYSTEM
TO CUSTOMER POWER SUPPLY
480VAC/3PH/60Hz 4-WIRE
ESTIM. LOAD = 95 AMP
RADIO CONTROL SYSTEM
VEIGH SCALE SYSTEM
RADIO COMMUNICATIONS SYSTEM FOR EL. 23 MESSAGE DISPLAY
PANELVIEW FAULT DISPLAY
CAB OPERATOR'S CONTROLLERS
NOTES:
1. SEE DRAWING D-18408-800-2 FOR GEN. NOTES, SYMBOLS & DEVICE TAG INDEX.
REVISIONS
2 9/29/00 REVISE FULL LOAD AMPS
1 6/8/99 FOR RECORD
0 9/28/98 RELEASE FOR PRODUCTION
AMERGEN ENERGY COMPANY
GPU NUCLEAR
P.O. NUMBER: 01028825
AMERICAN CRANE & EQUIPMENT CORPORATION
105/10 TON REACTOR BUILDING CRANE
ONE-LINE DIAGRAM
OYSTER CREEK REACTOR BUILDING CRANE- TROLLEY REPLACEMENT
D-18408-801
2

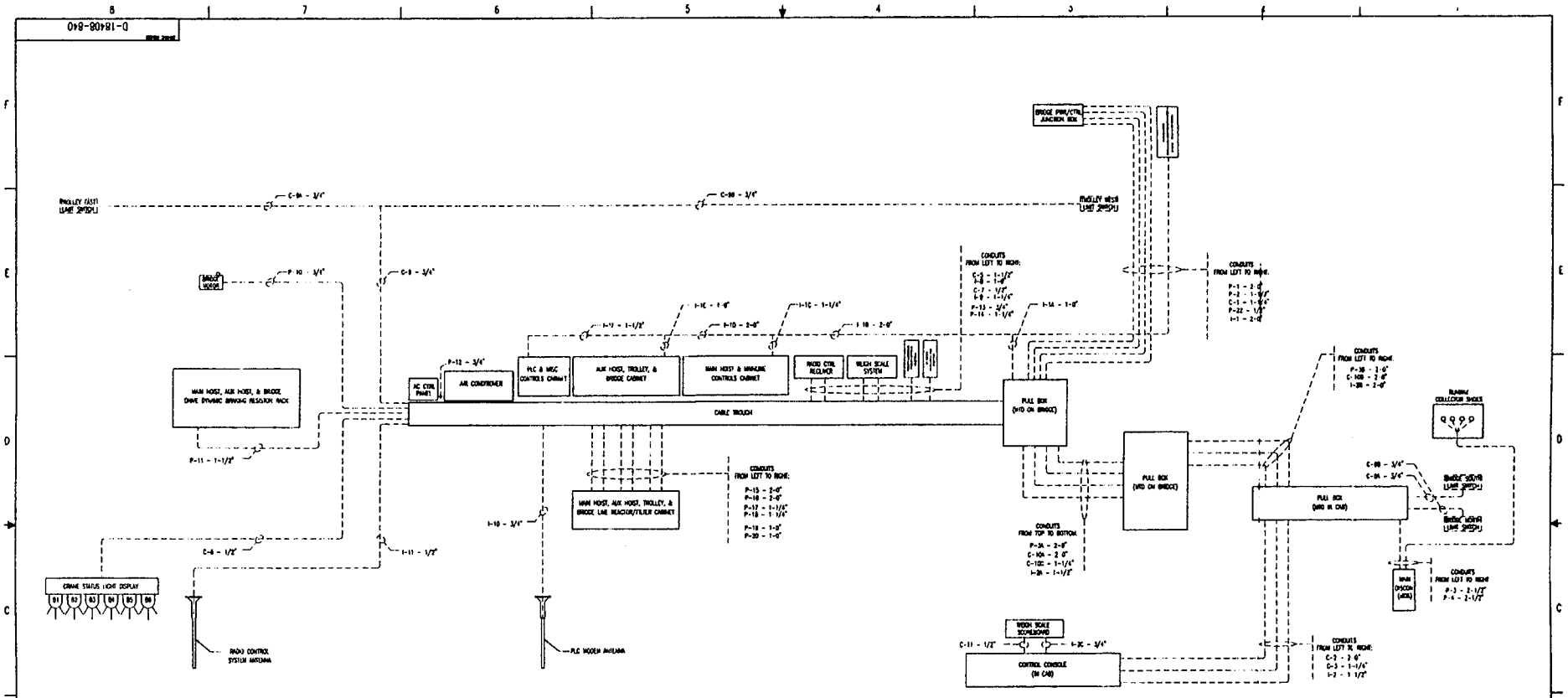

NOTES:

1. SEE DRAWING D-18408-800-2 FOR GEN. NOTES, SYMBOLS & DEVICE TAG INDEX
2. REFERENCE DWGS D-18408-852 & 853 FOR CONDUIT SCHEDULES AND CONDUIT CONTENTS.

REV. NO.	DATE	DESCRIPTION	DRWN	CHK	APPR
1	6/6/00	FOR RECORD	KCB	JRW	GPM
0	6/28/00	RELEASE FOR PRODUCTION	KCB	JRW	GPM

REVISIONS

AMERGEN ENERGY COMPANY
GPU NUCLEAR
P.O. NUMBER: 01028825

AMERICAN CRANE & EQUIPMENT CORPORATION
DOUGLASSVILLE, PA 19518 U.S.A.
PHONE: 610-385-8001 FAX: 610-385-3991

105/10 TON REACTOR BUILDING CRANE
BRIDGE CONDUIT LAYOUT

OYSTER CREEK REACTOR BUILDING CRANE - TROLLEY REPLACEMENT

DRAWN BY K. BOWER 3/13/00
CHECKED BY J. WEST 6/28/00
APPROVED BY G. MALEY 6/28/00

SIZE B1.3
CODE 18408
DRAWING NUMBER D-18408-840
REV. 1

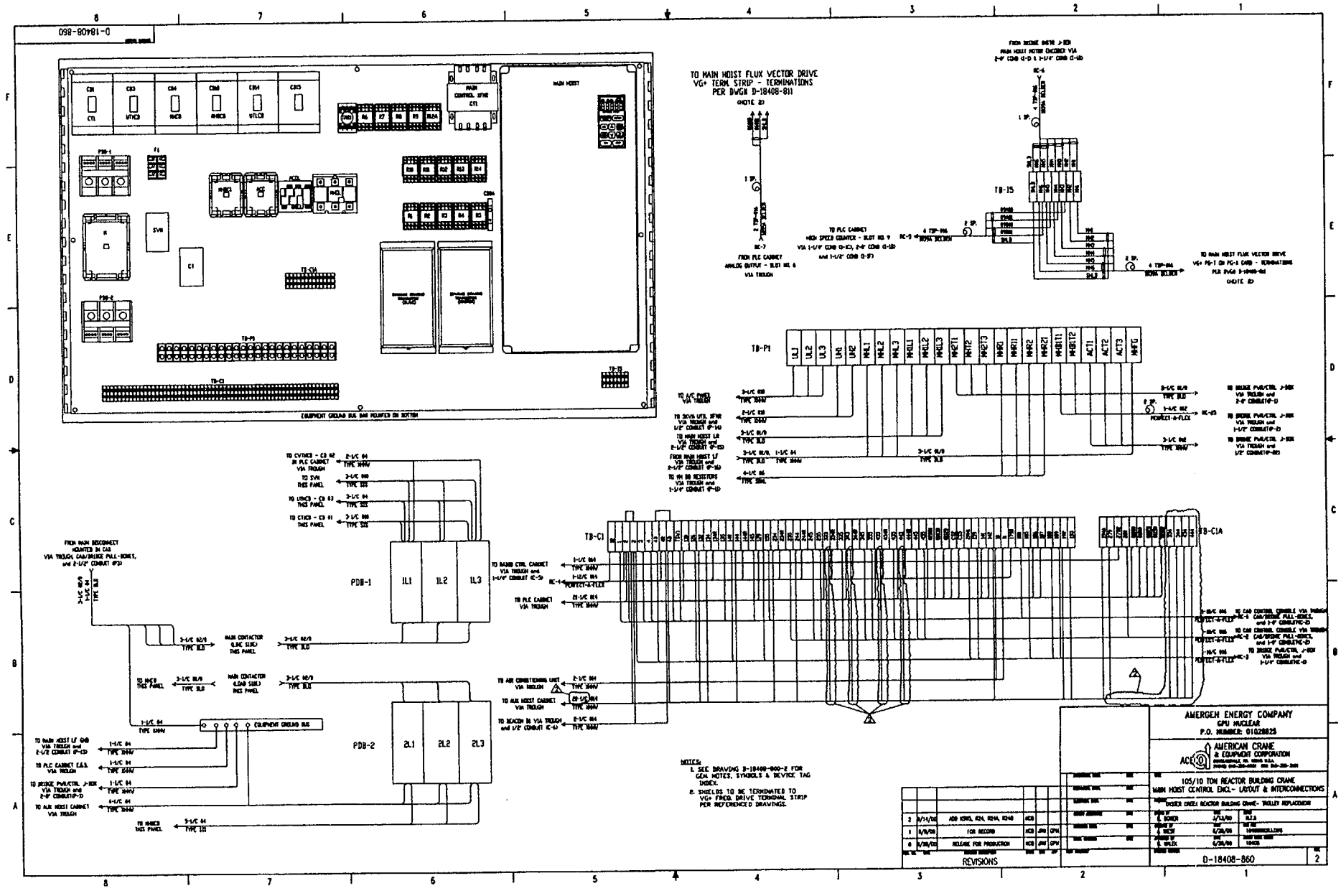
D-18408-860
TO MAIN HOIST FLUX VECTOR DRIVE VG+ TERM. STRIP - TERMINATIONS PER DWG# D-18408-811
(NOTE 2)
TB-15
TB-P1
TB-C1
TB-C1A
PDB-1
PDB-2
1L1
1L2
1L3
2L1
2L2
2L3
EQUIPMENT GROUND BUS
NOTES:
1. SEE DRAWING D-18408-000-2 FOR GEN. NOTES, SYMBOLS & DEVICE TAG INDEX.
2. SHIELDS TO BE TERMINATED TO VG+ FREQ. DRIVE TERMINAL STRIP PER REFERENCED DRAWINGS.
REVISIONS
2 8/14/00 ADD R3R3, R24, R24A, R24B HCB
1 8/8/00 FOR RECORD HCB JRW DPW
0 8/28/00 RELEASE FOR PRODUCTION HCB JRW DPW
AMERGEN ENERGY COMPANY
GPU NUCLEAR
P.O. NUMBER: 01028825
AMERICAN CRANE & EQUIPMENT CORPORATION
105/10 TON REACTOR BUILDING CRANE
MAIN HOIST CONTROL ENCL- LAYOUT & INTERCONNECTIONS
D-18408-860
2

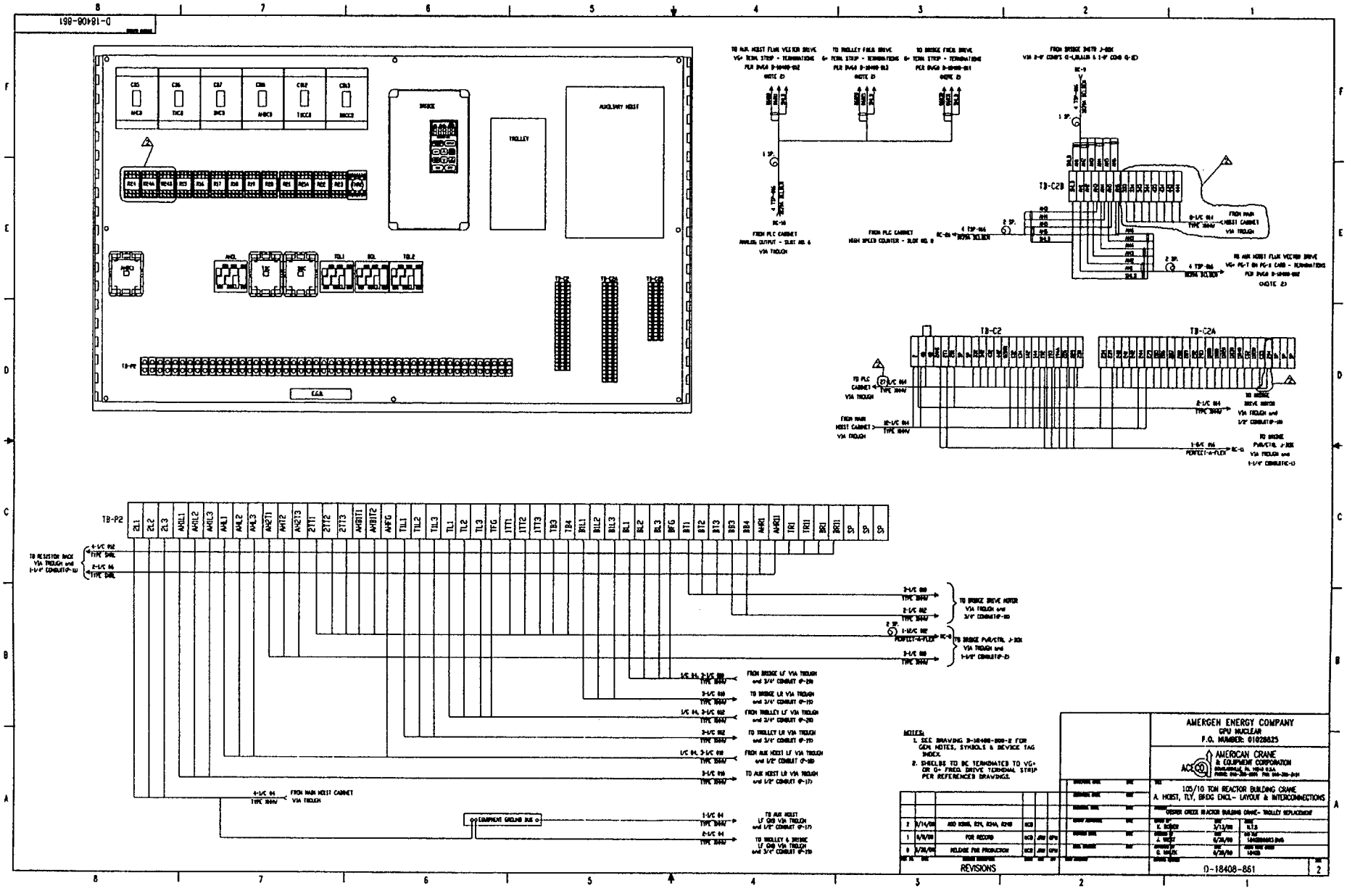
D-18408-861
BRIDGE
TROLLEY
AUXILIARY HOIST
TB-P2
TB-C2B
TB-C2
TB-C2A
AMERGEN ENERGY COMPANY
GPU NUCLEAR
F.O. NUMBER: 01028625
AMERICAN CRANE & EQUIPMENT CORPORATION
105/10 TON REACTOR BUILDING CRANE
A. HOIST, TLY, BRDG ENCL- LAYOUT & INTERCONNECTIONS
REVISIONS
D-18408-861
2

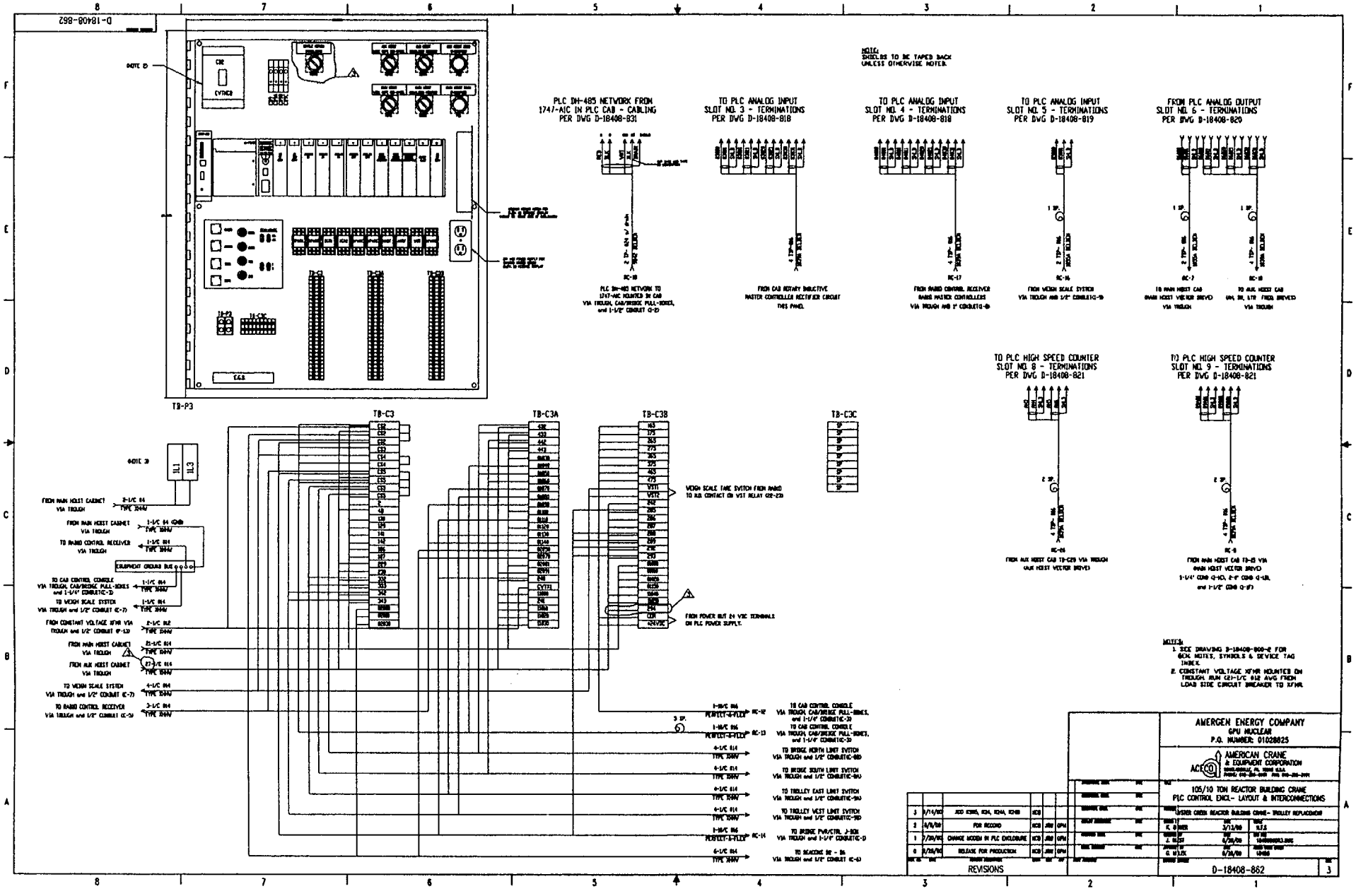
D-18408-862
NOTE: SHIELDS TO BE TAPED BACK UNLESS OTHERWISE NOTED.
PLC DH-485 NETWORK FROM 1747-AIC IN PLC CAB - CABLING PER DWG D-18408-831
TO PLC ANALOG INPUT SLOT NO. 3 - TERMINATIONS PER DWG D-18408-818
TO PLC ANALOG INPUT SLOT NO. 4 - TERMINATIONS PER DWG D-18408-818
TO PLC ANALOG INPUT SLOT NO. 5 - TERMINATIONS PER DWG D-18408-819
FROM PLC ANALOG OUTPUT SLOT NO. 6 - TERMINATIONS PER DWG D-18408-820
TO PLC HIGH SPEED COUNTER SLOT NO. 8 - TERMINATIONS PER DWG D-18408-821
TO PLC HIGH SPEED COUNTER SLOT NO. 9 - TERMINATIONS PER DWG D-18408-821
TB-P3
TB-C3
TB-C3A
TB-C3B
TB-C3C
NOTES:
1. SEE DRAWING D-18408-800-E FOR BOX NOTES, SYMBOLS & DEVICE TAG INDEX.
2. CONSTANT VOLTAGE XFMR MOUNTED ON TROLLEY. RUN (2)-1/C #12 AWG FROM LOAD SIDE CIRCUIT BREAKER TO XFMR.
AMERGEN ENERGY COMPANY
GPU NUCLEAR
P.O. NUMBER: 01028825
AMERICAN CRANE & EQUIPMENT CORPORATION
105/10 TON REACTOR BUILDING CRANE
PLC CONTROL EXCL- LAYOUT & INTERCONNECTIONS
REVISIONS
D-18408-862
3

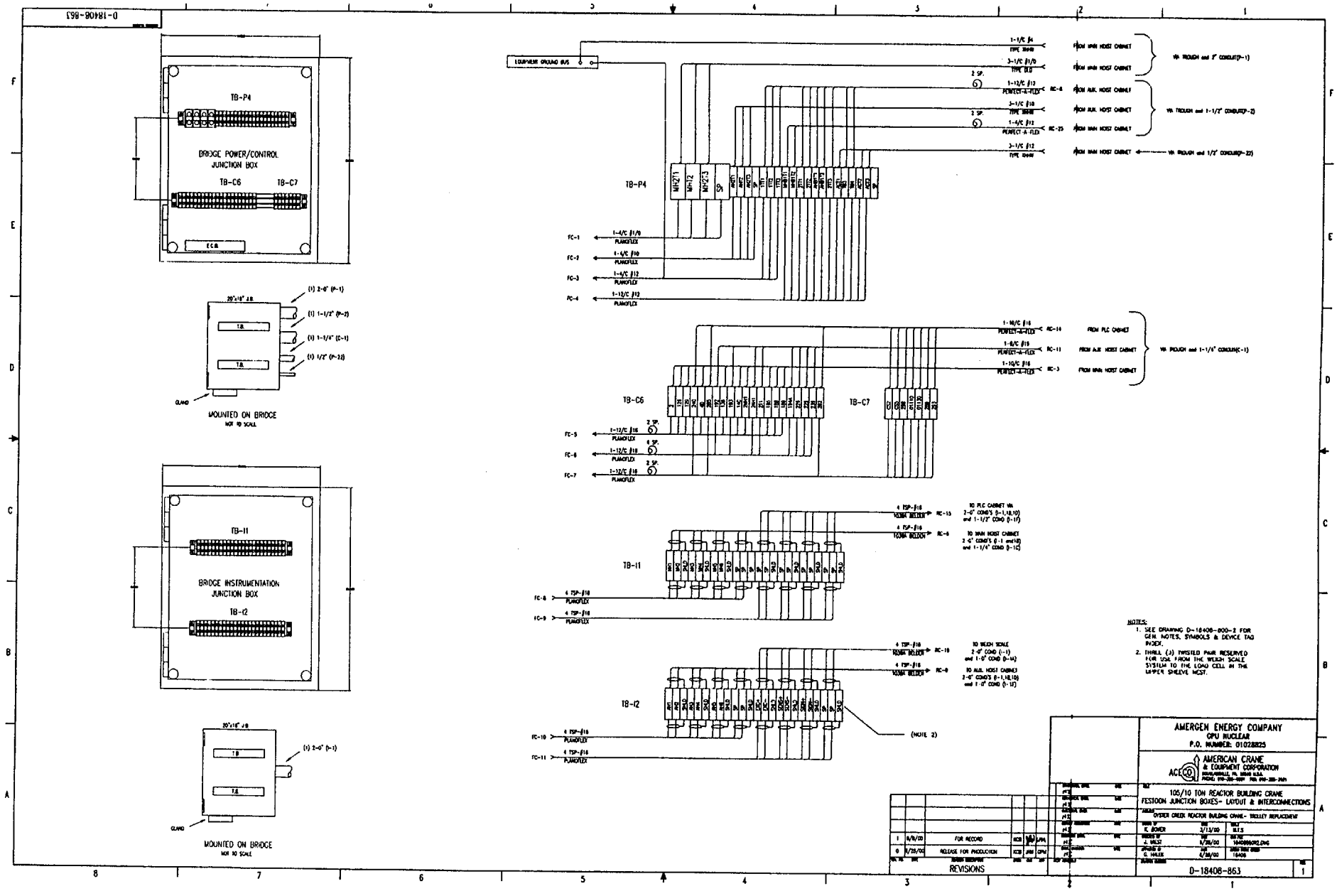
D-18408-863
TB-P4
BRIDGE POWER/CONTROL JUNCTION BOX
TB-C6
TB-C7
MOUNTED ON BRIDGE
NOT TO SCALE
TB-11
BRIDGE INSTRUMENTATION JUNCTION BOX
TB-12
MOUNTED ON BRIDGE
NOT TO SCALE
EQUIPMENT GROUND BUS
FROM MAIN HOIST CABINET
FROM AUX. HOIST CABINET
FROM PLC CABINET
VIA TROUGH and 3" CONDUIT(P-1)
VIA TROUGH and 1-1/2" CONDUIT(P-2)
VIA TROUGH and 1/2" CONDUIT(P-23)
VIA TROUGH and 1-1/4" CONDUIT(C-1)
TO PLC CABINET VIA 2-0" CONDUITS (0-1,18,10) and 1-1/2" CONDUIT (0-17)
TO MAIN HOIST CABINET 2-0" CONDUITS (0-1 and 18) and 1-1/4" CONDUIT (0-12)
TO WEIGH SCALE 2-0" CONDUIT (0-1) and 1-0" CONDUIT (0-14)
TO AUX. HOIST CABINET 2-0" CONDUITS (0-1,18,10) and 1-0" CONDUIT (0-12)
(NOTE 2)
NOTES:
1. SEE DRAWING D-18408-000-2 FOR GEN. NOTES, SYMBOLS & DEVICE TAG INDEX.
2. THREE (3) TWISTED PAIR RESERVED FOR USA FROM THE WEIGH SCALE SYSTEM TO THE LOAD CELL IN THE UPPER SHEAVE MAST.
AMERGEN ENERGY COMPANY
GPU NUCLEAR
P.O. NUMBER: 01028825
AMERICAN CRANE & EQUIPMENT CORPORATION
105/10 TON REACTOR BUILDING CRANE
FESTOON JUNCTION BOXES- LAYOUT & INTERCONNECTIONS
OYSTER CREEK REACTOR BUILDING CRANE- TROLLEY REPLACEMENT
FOR RECORD
RELEASE FOR PRODUCTION
REVISIONS
D-18408-863

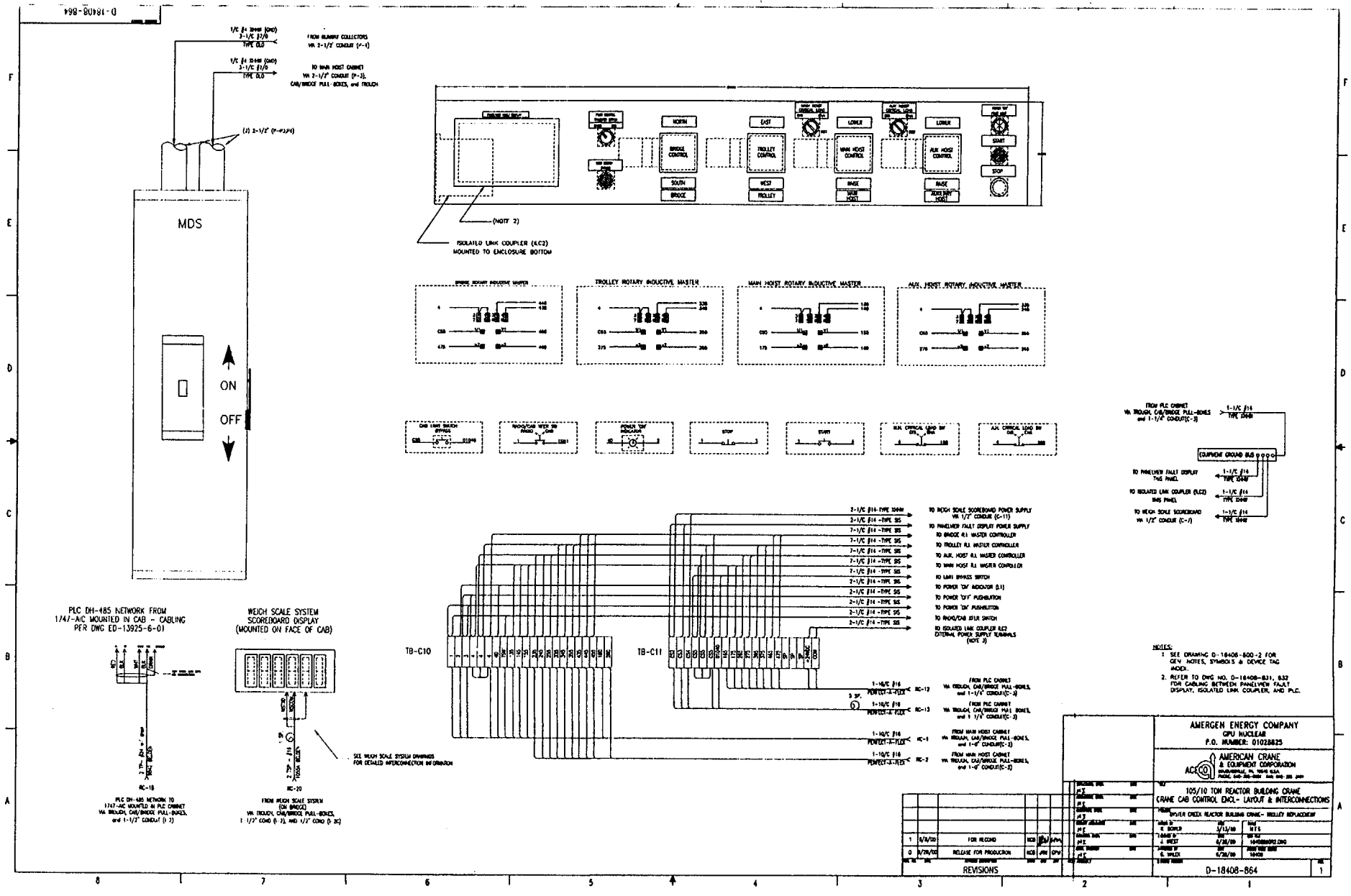
D-18408-864
MDS
ON
OFF
NORTH
EAST
LOWER
START
STOP
BRIDGE CONTROL
TROLLEY CONTROL
MAIN HOIST CONTROL
AUX HOIST CONTROL
SOUTH BRIDGE
WEST TROLLEY
BASE MAIN HOIST
BASE AUXILIARY HOIST
(NOTE 2)
ISOLATED LINK COUPLER (ILC2) MOUNTED TO ENCLOSURE BOTTOM
BRIDGE ROTARY INDUCTIVE MASTER
TROLLEY ROTARY INDUCTIVE MASTER
MAIN HOIST ROTARY INDUCTIVE MASTER
AUX. HOIST ROTARY INDUCTIVE MASTER
PLC DH-485 NETWORK FROM 1747-AIC MOUNTED IN CAB - CABLING PER DWG ED-13925-6-01
WEIGH SCALE SYSTEM SCOREBOARD DISPLAY (MOUNTED ON FACE OF CAB)
TB-C10
TB-C11
SEE WEIGH SCALE SYSTEM DRAWINGS FOR DETAILED INTERCONNECTION INFORMATION
TO WEIGH SCALE SCOREBOARD POWER SUPPLY VIA 1/2" CONDUIT (C-11)
TO PANELVIEW FAULT DISPLAY POWER SUPPLY
TO BRIDGE R.I. MASTER CONTROLLER
TO TROLLEY R.I. MASTER CONTROLLER
TO AUX. HOIST R.I. MASTER CONTROLLER
TO MAIN HOIST R.I. MASTER CONTROLLER
TO LIMIT BYPASS SWITCH
TO POWER "ON" INDICATOR (L1)
TO POWER "OFF" PUSHBUTTON
TO POWER "ON" PUSHBUTTON
TO INCHO/CAB SELECT SWITCH
TO ISOLATED LINK COUPLER ILC2 EXTERNAL POWER SUPPLY TERMINALS (NOTE 3)
FROM PLC CABINET VIA TROUGH, CAB/BRIDGE PULL-BOXES, and 1-1/4" CONDUIT(C-3)
FROM MAIN HOIST CABINET VIA TROUGH, CAB/BRIDGE PULL-BOXES, and 1-4" CONDUIT(C-1)
EQUIPMENT GROUND BUS
TO PANELVIEW FAULT DISPLAY THIS PANEL
TO ISOLATED LINK COUPLER (ILC2) THIS PANEL
TO WEIGH SCALE SCOREBOARD VIA 1/2" CONDUIT (C-7)
NOTES:
1. SEE DRAWING D-18408-800-2 FOR GEN NOTES, SYMBOLS & DEVICE TAG INDEX.
2. REFER TO DWG NO. D-18408-831, 832 FOR CABLING BETWEEN PANELVIEW FAULT DISPLAY, ISOLATED LINK COUPLER, AND PLC.
AMERGEN ENERGY COMPANY
CPU NUCLEAR
P.O. NUMBER: 01028825
AMERICAN CRANE & EQUIPMENT CORPORATION
105/10 TON REACTOR BUILDING CRANE
CRANE CAB CONTROL ENCL- LAYOUT & INTERCONNECTIONS
OYSTER CREEK REACTOR BUILDING CRANE- TROLLEY REPLACEMENT
D-18408-864
REVISIONS
FOR RECORD
RELEASE FOR PRODUCTION

D-18408-865

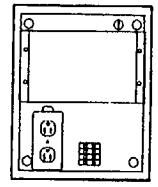

ALLEN-BRADLEY DATALINER

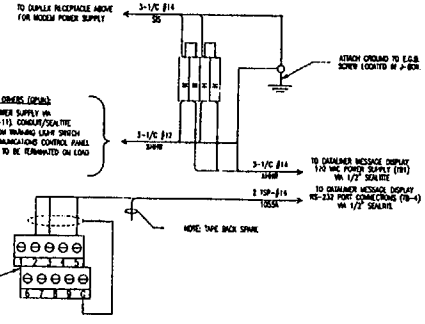

DATALINER CONFIGURATION DIP SWITCH SETTINGS

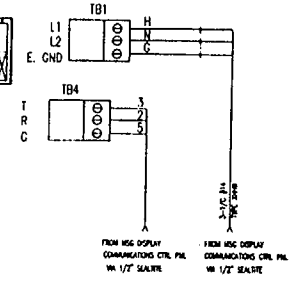

SRM6000 MODEM SOFTWARE CONFIGURATION SETTINGS

(SETTINGS APPLICABLE FOR BOTH MODEM UNITS EXCEPT AS NOTED.)

TERMINAL <<->> RF MODEM (HYPER-TERMINAL CONFIGURATION)

COM PORT	COM1
BAUD RATE	19200
DATA BITS	8
PARITY	NONE
STOP BITS	1
FLOW CONTROL	NONE

RF MODEM <<->> RF MODEM

OPERATING MODE	P-P MASTER (CRANE), P-P SLAVE (23' ELEVATION)
BAUD RATE	19200
(A) DATA PARITY	0
(A) MODBUS RTU	0
0- FREQ. HOP	3
1- MAX. PACKET SIZE	9
2- MIN. PACKET SIZE	2
3- X RATE	1
4- D RATE	3
5- POWER	8
6- SECURITY	0
7- RTS/CTS	0
8- NUMBER OF REPEATERS	0
9- MASTER PACKET REPEAT	3
2- MAX SLAVE RETRY	3
3- RETRY CODE	3
4- DTR CONNECT	0
5- REPEATER FREQUENCY	0
6- NETWORK ID.	255
7- RESERVED	-
8- MULTIMASTER SYNC	0
9- 1 PPS ENABLE / DELAY	255

MODEM-TO-PLC and MODEM-TO-DATALINER RS-232 COMMUNICATION CABLE CONFIGURATION

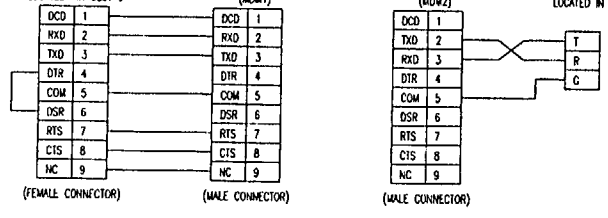

NOTES:
1. SEE DRAWING D-18408-800-2 FOR GEN. NOTES, SYMBOLS & DEVICE TAG INDEX.

REV	DATE	DESCRIPTION	DRN	CHK	APP
1	4/4/00	FOR RECORD	KCB	JRM	GPN
0	3/29/00	RELEASE FOR PRODUCTION	KCB	JRM	GPN

REVISIONS

AMERGEN ENERGY COMPANY
GPU NUCLEAR
P.O. NUMBER: 01028825

AMERICAN CRANE & EQUIPMENT CORPORATION
ACECO
KOMOKA/BRIDGE PA. 19046 U.S.A.
PHONE: 610-268-0201 FAX: 610-268-2484

105/10 TON REACTOR BUILDING CRANE
DATALINER MESSAGE DISPLAY- LAYOUT & INTERCONNECTIONS

PROJECT: SYSTEM CHECK REACTOR BUILDING CRANE - TROLLY REPLACEMENT

SCALE: 2	DATE: 2/13/00	DRAWN BY: H13
DESIGNED BY: K. BEAVER	DATE: 2/13/00	DWG NO: 18408800R2.DWG
DRAWN BY: J. WEST	DATE: 6/29/00	DWG NO: 18408
CHECKED BY: G. MALEK	DATE: 6/29/00	

DRAWING NUMBER: D-18408-865 REV: 1

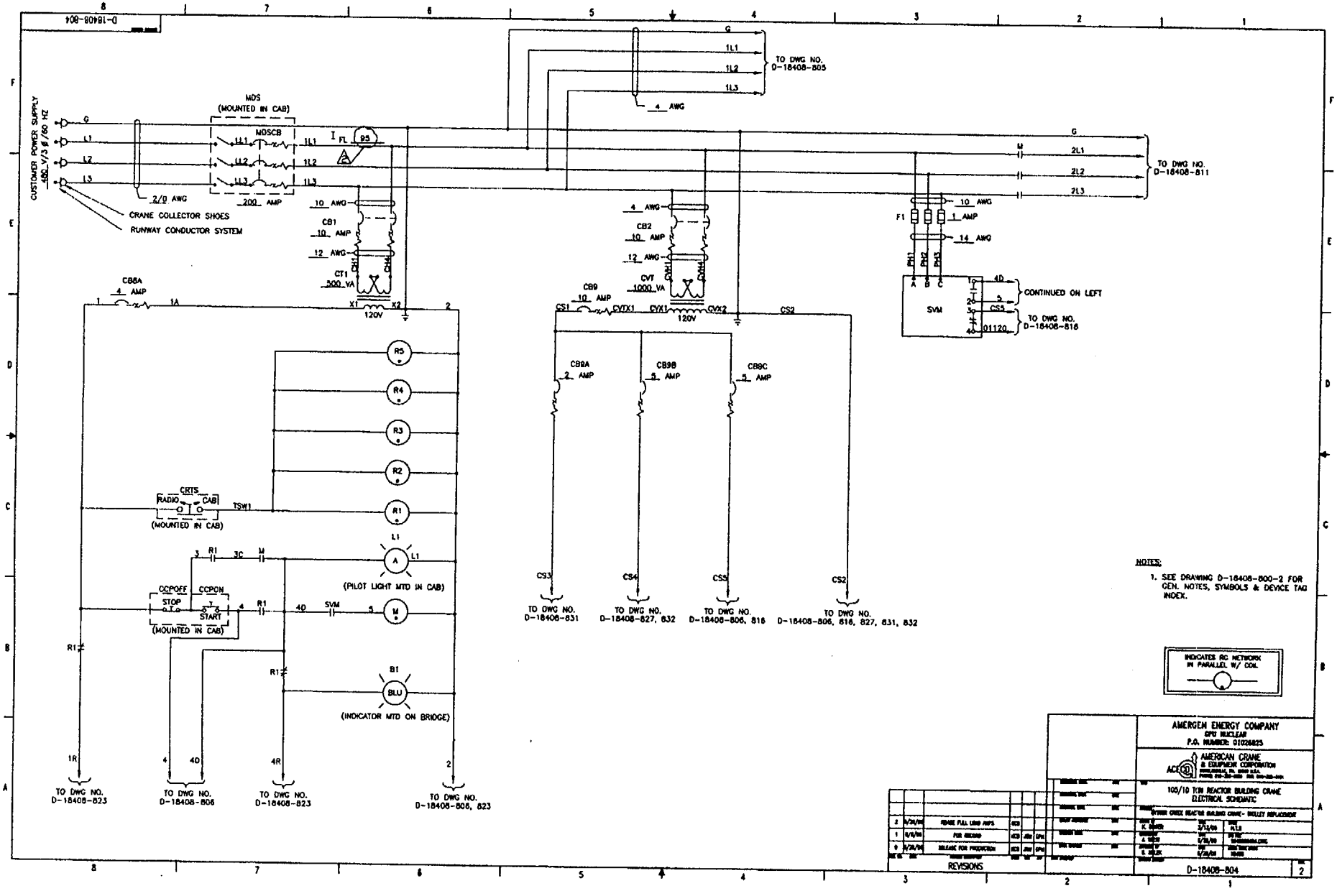
D-18408-804
CUSTOMER POWER SUPPLY
480 V/3 ø/60 HZ
G
L1
L2
L3
2/0 AWG
CRANE COLLECTOR SHOES
RUNWAY CONDUCTOR SYSTEM
MDS
(MOUNTED IN CAB)
MDSCB
200 AMP
I FL
95
10 AWG
CB1
10 AMP
12 AWG
CT1
500 VA
CH1
CH4
X1
X2
120V
CB8A
4 AMP
1A
R5
R4
R3
R2
R1
CRTS
RADIO
CAB
TSW1
(MOUNTED IN CAB)
L1
A
(PILOT LIGHT MTD IN CAB)
CCPOFF
CCPON
STOP
START
(MOUNTED IN CAB)
M
SVM
B1
BLU
(INDICATOR MTD ON BRIDGE)
TO DWG NO. D-18408-823
TO DWG NO. D-18408-806
TO DWG NO. D-18408-823
TO DWG NO. D-18408-806, 823
TO DWG NO. D-18408-805
4 AWG
1L1
1L2
1L3
2L1
2L2
2L3
TO DWG NO. D-18408-811
CB2
10 AMP
CVT
1000 VA
CVX1
CVX2
CB9
10 AMP
CVTX1
CS1
CS2
CS3
CS4
CS5
CB9A
2 AMP
CB9B
5 AMP
CB9C
5 AMP
TO DWG NO. D-18408-831
TO DWG NO. D-18408-827, 832
TO DWG NO. D-18408-806, 816
TO DWG NO. D-18408-806, 816, 827, 831, 832
F1
1 AMP
14 AWG
Ph1
Ph2
Ph3
CONTINUED ON LEFT
TO DWG NO. D-18408-816
01120
NOTES:
1. SEE DRAWING D-18408-800-2 FOR GEN. NOTES, SYMBOLS & DEVICE TAG INDEX.
INDICATES RC NETWORK IN PARALLEL W/ COIL
REVISIONS
REMOVE FULL LOAD AMPS
FOR RECORD
RELEASE FOR PRODUCTION
AMERGEN ENERGY COMPANY
GPU NUCLEAR
P.O. NUMBER: 01026825
AMERICAN CRANE & EQUIPMENT CORPORATION
105/10 TON REACTOR BUILDING CRANE
ELECTRICAL SCHEMATIC
D-18408-804

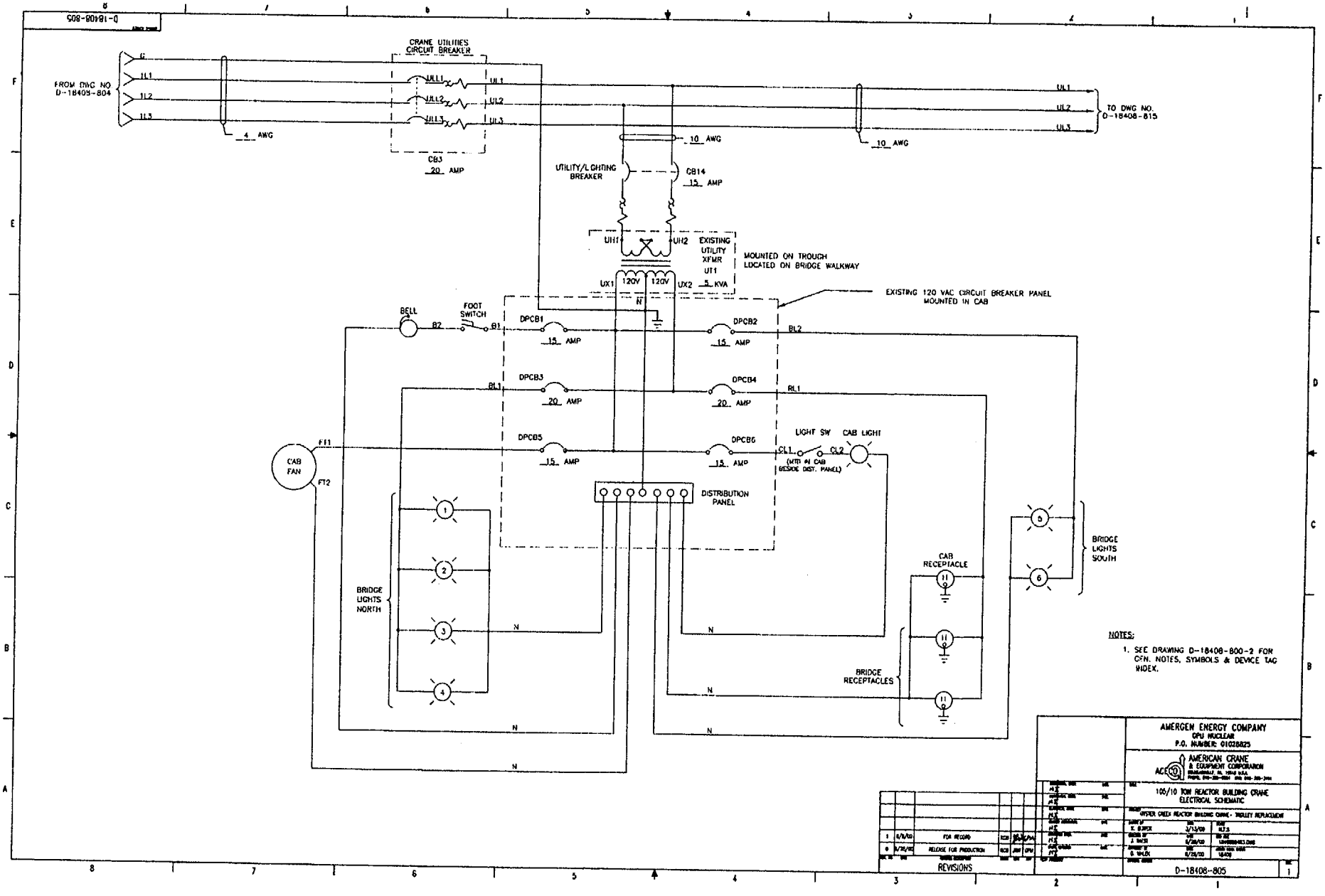
D-18408-805
CRANE UTILITIES CIRCUIT BREAKER
FROM DWG NO D-18408-804
G
IL1
IL2
IL3
4 AWG
UIL1
UIL2
UIL3
UL1
UL2
UL3
CB3
20 AMP
10 AWG
TO DWG NO. D-18408-815
UTILITY/LIGHTING BREAKER
CB14
15 AMP
UH1
UH2
EXISTING UTILITY XFMR UT1
MOUNTED ON TROUGH LOCATED ON BRIDGE WALKWAY
UX1
120V
120V
UX2
5 KVA
N
EXISTING 120 VAC CIRCUIT BREAKER PANEL MOUNTED IN CAB
BELL
B2
FOOT SWITCH
B1
DPCB1
15 AMP
DPCB2
15 AMP
BL2
DPCB3
20 AMP
BL1
DPCB4
20 AMP
BL1
DPCB5
15 AMP
DPCB6
15 AMP
LIGHT SW
CAB LIGHT
CL1
CL2
(MTD IN CAB BESIDE DIST. PANEL)
CAB FAN
FT1
FT2
DISTRIBUTION PANEL
BRIDGE LIGHTS NORTH
BRIDGE LIGHTS SOUTH
CAB RECEPTACLE
BRIDGE RECEPTACLES
N
NOTES:
1. SEE DRAWING D-18408-800-2 FOR GEN. NOTES, SYMBOLS & DEVICE TAG INDEX.
AMERGEN ENERGY COMPANY
GPU NUCLEAR
P.O. NUMBER: 01028025
AMERICAN CRANE & EQUIPMENT CORPORATION
100/10 TON REACTOR BUILDING CRANE ELECTRICAL SCHEMATIC
OYSTER CREEK REACTOR BUILDING CRANE - TROLLEY REPLACEMENT
J. SACKS
J/13/00
8/28/00
D-18408-805
1
FOR RECORD
RELEASE FOR PRODUCTION
REVISIONS

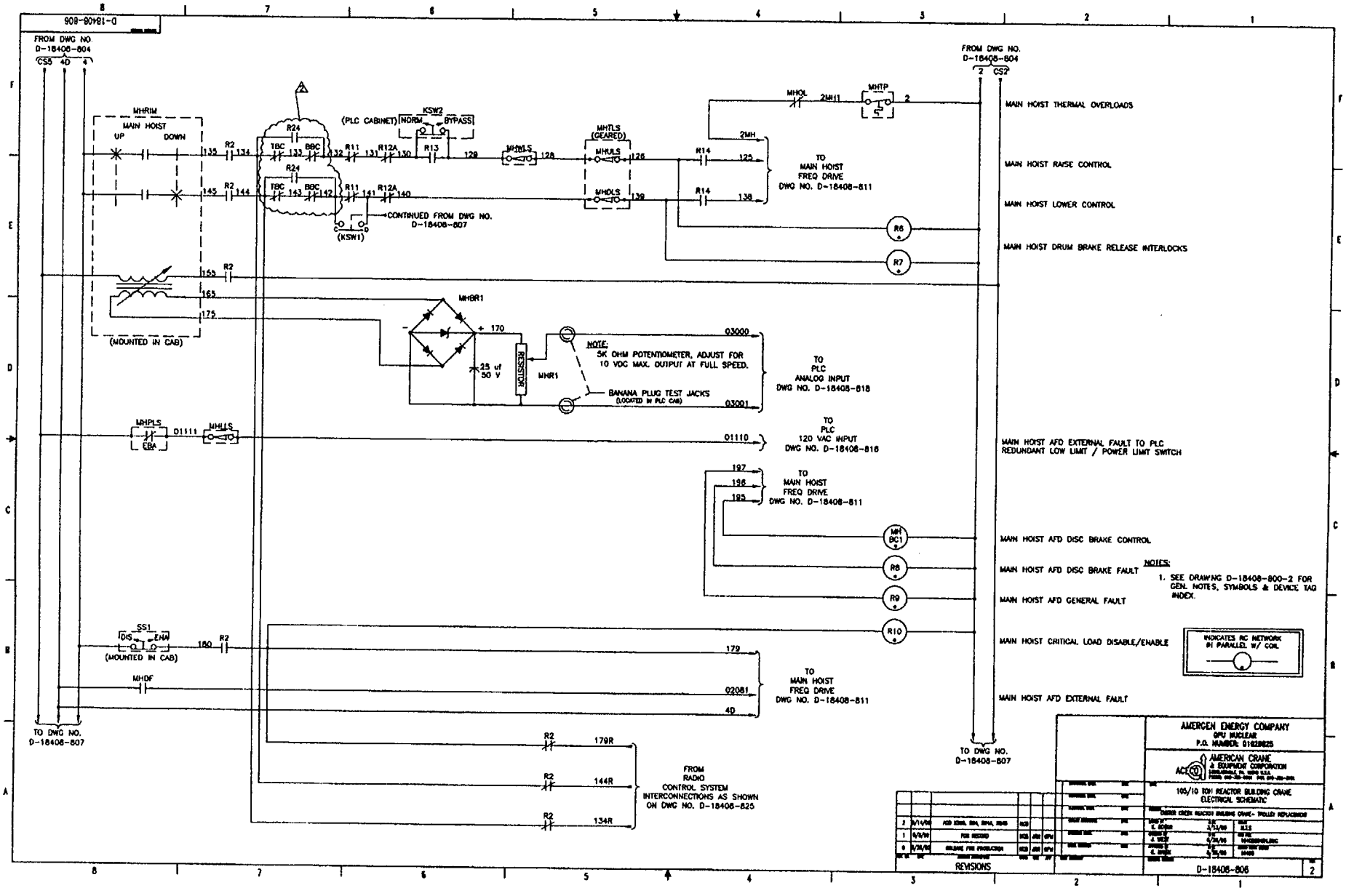
D-18408-806
FROM DWG NO. D-18408-804
CS5 4D 4
MHRIM
MAIN HOST
UP
DOWN
(MOUNTED IN CAB)
R24
TBC
BBC
R11
R12A
R13
KSW2
(PLC CABINET) NORM BYPASS
MHWLS
MHULS (GEARED)
MHDLS
R14
2MH
TO MAIN HOST FREQ DRIVE DWG NO. D-18408-811
CONTINUED FROM DWG NO. D-18408-807
(KSW1)
MHOL
2MH11
MHTP
FROM DWG NO. D-18408-804
2 CS2
MAIN HOST THERMAL OVERLOADS
MAIN HOST RAISE CONTROL
MAIN HOST LOWER CONTROL
MAIN HOST DRUM BRAKE RELEASE INTERLOCKS
R6
R7
MHBR1
RESISTOR
MHR1
25 uf 50 V
NOTE: 5K OHM POTENTIOMETER, ADJUST FOR 10 VDC MAX. OUTPUT AT FULL SPEED.
BANANA PLUG TEST JACKS (LOCATED IN PLC CAB)
03000
03001
TO PLC ANALOG INPUT DWG NO. D-18408-818
MHPLS
EBA
D1111
MHULS
01110
TO PLC 120 VAC INPUT DWG NO. D-18408-816
MAIN HOST AFD EXTERNAL FAULT TO PLC REDUNDANT LOW LIMIT / POWER LIMIT SWITCH
197
196
195
TO MAIN HOST FREQ DRIVE DWG NO. D-18408-811
MH BC1
R8
R9
R10
MAIN HOST AFD DISC BRAKE CONTROL
MAIN HOST AFD DISC BRAKE FAULT
MAIN HOST AFD GENERAL FAULT
MAIN HOST CRITICAL LOAD DISABLE/ENABLE
NOTES:
1. SEE DRAWING D-18408-800-2 FOR GEN. NOTES, SYMBOLS & DEVICE TAG INDEX.
INDICATES RC NETWORK IN PARALLEL W/ COIL
SS1
DIS
ENA
(MOUNTED IN CAB)
MHDF
179
02081
4D
TO MAIN HOST FREQ DRIVE DWG NO. D-18408-811
MAIN HOST AFD EXTERNAL FAULT
TO DWG NO. D-18408-807
179R
144R
134R
FROM RADIO CONTROL SYSTEM INTERCONNECTIONS AS SHOWN ON DWG NO. D-18408-825
TO DWG NO. D-18408-807
REVISIONS
AMERGEN ENERGY COMPANY
GPU NUCLEAR
P.O. NUMBER: 01028025
AMERICAN CRANE & EQUIPMENT CORPORATION
105/10 TON REACTOR BUILDING CRANE
ELECTRICAL SCHEMATIC
D-18408-806
2

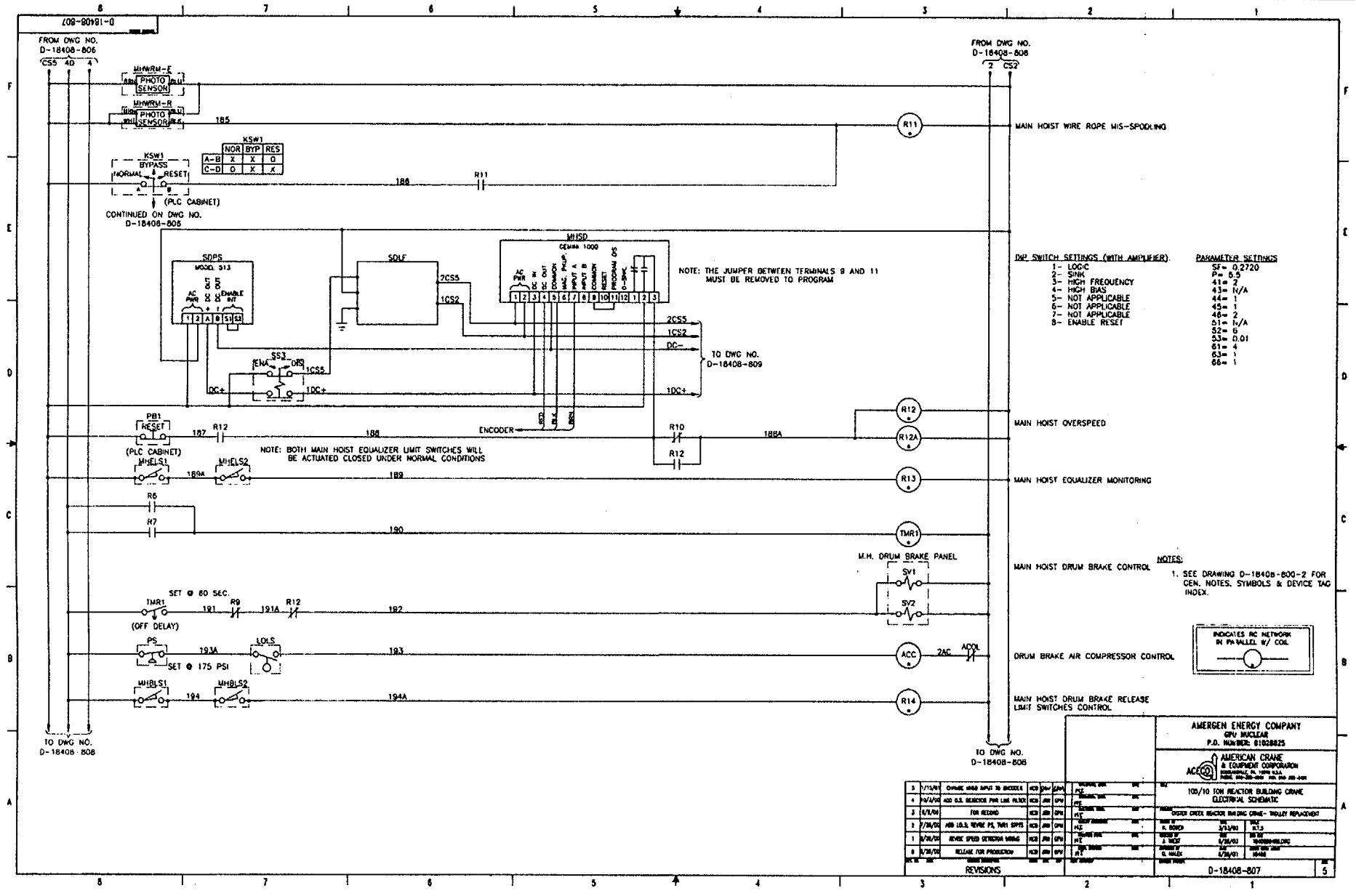
D-18408-807
FROM DWG NO. D-18408-806
CS5 4D 4
MHWRM-E
PHOTO SENSOR
MHWRM-R
PHOTO SENSOR
185
KSW1
NOR BYP RES
A-B X X O
C-D O X X
KSW1 BYPASS
NORMAL RESET
(PLC CABINET)
188
R11
CONTINUED ON DWG NO. D-18408-805
SDPS
MODEL 513
SDLF
2CS5
1CS2
MHSD
CEMax 1000
NOTE: THE JUMPER BETWEEN TERMINALS 9 AND 11 MUST BE REMOVED TO PROGRAM
2CS5
1CS2
DC-
TO DWG NO. D-18408-809
SS3
ENA
DIS
1CS5
DC+
1DC+
PB1
RESET
(PLC CABINET)
187
R12
188
ENCODER
R10
R12
188A
NOTE: BOTH MAIN HOIST EQUALIZER LIMIT SWITCHES WILL BE ACTUATED CLOSED UNDER NORMAL CONDITIONS
MHELS1
189A
MHELS2
189
R6
R7
190
SET @ 60 SEC.
TMR1
(OFF DELAY)
191
R9
191A
R12
192
PS
SET @ 175 PSI
193A
LOLS
193
MHBLS1
194
MHBLS2
194A
FROM DWG NO. D-18408-808
2 CS2
R11
MAIN HOIST WIRE ROPE MIS-SPOOLING
R12
R12A
MAIN HOIST OVERSPEED
R13
MAIN HOIST EQUALIZER MONITORING
TMR1
M.H. DRUM BRAKE PANEL
SV1
SV2
MAIN HOIST DRUM BRAKE CONTROL
ACC
2AC
ACCL
DRUM BRAKE AIR COMPRESSOR CONTROL
R14
MAIN HOIST DRUM BRAKE RELEASE LIMIT SWITCHES CONTROL
TO DWG NO. D-18408-808
DIP SWITCH SETTINGS (WITH AMPLIFIER)
1- LOGIC
2- SINK
3- HIGH FREQUENCY
4- HIGH BIAS
5- NOT APPLICABLE
6- NOT APPLICABLE
7- NOT APPLICABLE
8- ENABLE RESET
PARAMETER SETTINGS
SF= 0.2720
P= 5.5
41= 2
43= N/A
44= 1
45= 1
46= 2
51= N/A
52= 6
53= 0.01
61= 4
63= 1
66= 1
NOTES:
1. SEE DRAWING D-18408-800-2 FOR GEN. NOTES, SYMBOLS & DEVICE TAG INDEX.
INDICATES RC NETWORK IN PARALLEL W/ COIL
AMERGEN ENERGY COMPANY
GPU NUCLEAR
P.O. NUMBER: 81928825
AMERICAN CRANE & EQUIPMENT CORPORATION
100/10 TON REACTOR BUILDING CRANE
ELECTRICAL SCHEMATIC
OYSTER CREEK REACTOR BUILDING CRANE - TROLLEY REPLACEMENT
R. BORCH 3/13/03 R13
J. TROST 6/26/03
G. HAUCK 6/26/03
D-18408-807
5
REVISIONS

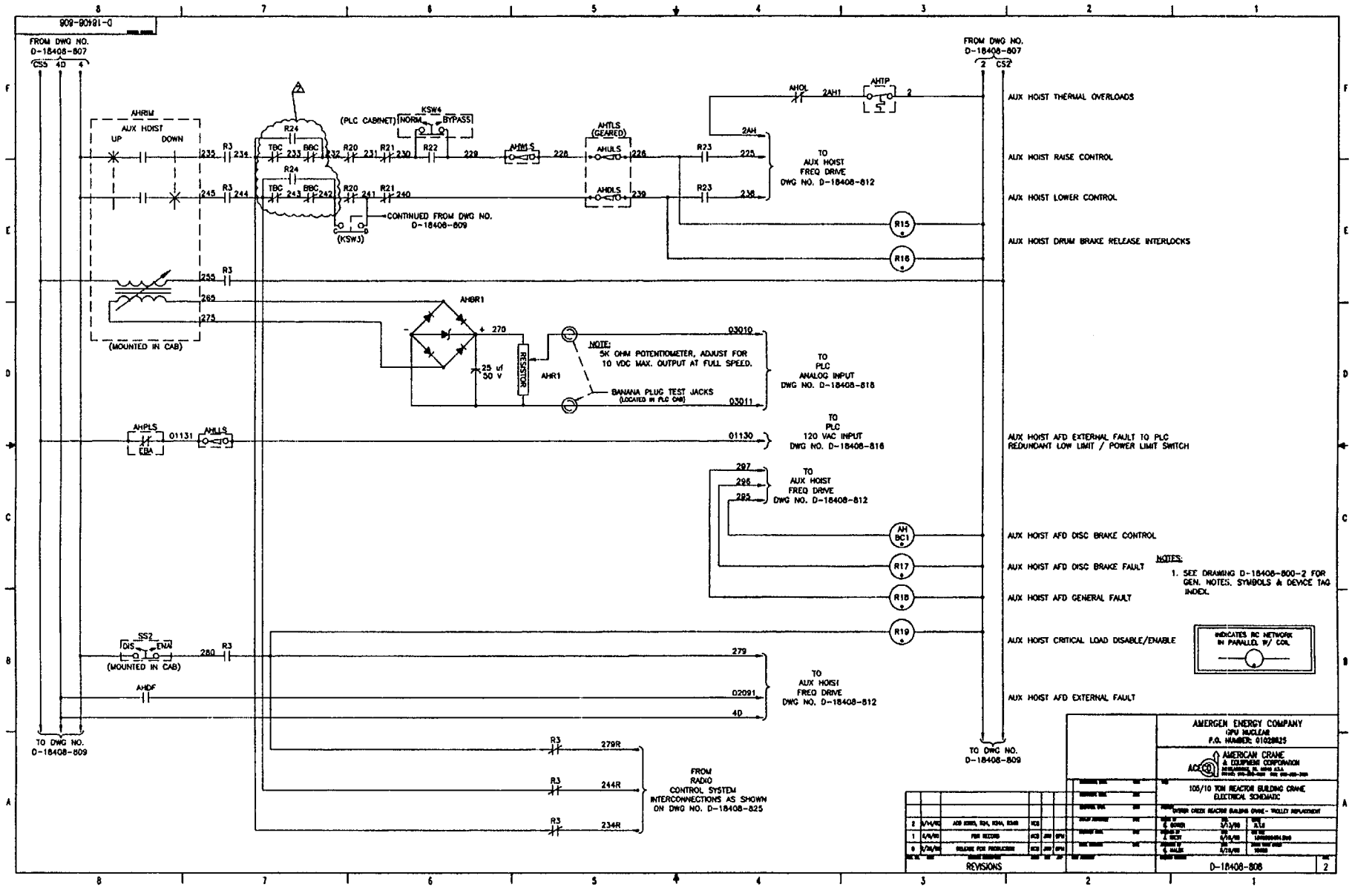
D-18408-808
FROM DWG NO. D-18408-807
CS5 4D 4
AHRM
AUX HOIST
UP
DOWN
R3
R24
TBC
BBC
R20
R21
R22
(PLC CABINET)
KSW4
NORM
BYPASS
AHMLS
AHTLS (GEARED)
AHULS
AHDLS
R23
(KSW3)
CONTINUED FROM DWG NO. D-18408-809
TO AUX HOIST FREQ DRIVE DWG NO. D-18408-812
AHOL
2AH1
AHTP
R15
R16
(MOUNTED IN CAB)
AHBR1
RESISTOR
AHR1
NOTE: 5K OHM POTENTIOMETER, ADJUST FOR 10 VDC MAX. OUTPUT AT FULL SPEED.
BANANA PLUG TEST JACKS (LOCATED IN PLC CAB)
TO PLC ANALOG INPUT DWG NO. D-18408-818
AHPLS
EBA
01131
TO PLC 120 VAC INPUT DWG NO. D-18408-816
AH BC1
R17
R18
R19
SS2
DIS
ENA
AHDF
TO DWG NO. D-18408-809
FROM RADIO CONTROL SYSTEM INTERCONNECTIONS AS SHOWN ON DWG NO. D-18408-825
FROM DWG NO. D-18408-807
CS2
AUX HOIST THERMAL OVERLOADS
AUX HOIST RAISE CONTROL
AUX HOIST LOWER CONTROL
AUX HOIST DRUM BRAKE RELEASE INTERLOCKS
AUX HOIST AFD EXTERNAL FAULT TO PLC REDUNDANT LOW LIMIT / POWER LIMIT SWITCH
AUX HOIST AFD DISC BRAKE CONTROL
AUX HOIST AFD DISC BRAKE FAULT
AUX HOIST AFD GENERAL FAULT
AUX HOIST CRITICAL LOAD DISABLE/ENABLE
AUX HOIST AFD EXTERNAL FAULT
TO DWG NO. D-18408-809
NOTES:
1. SEE DRAWING D-18408-800-2 FOR GEN. NOTES, SYMBOLS & DEVICE TAG INDEX.
INDICATES RC NETWORK IN PARALLEL W/ COIL
REVISIONS
AMERGEN ENERGY COMPANY
TMI NUCLEAR
P.O. NUMBER: 01028825
AMERICAN CRANE
A EQUIPMENT CORPORATION
105/10 TON REACTOR BUILDING CRANE
ELECTRICAL SCHEMATIC
D-18408-808
2

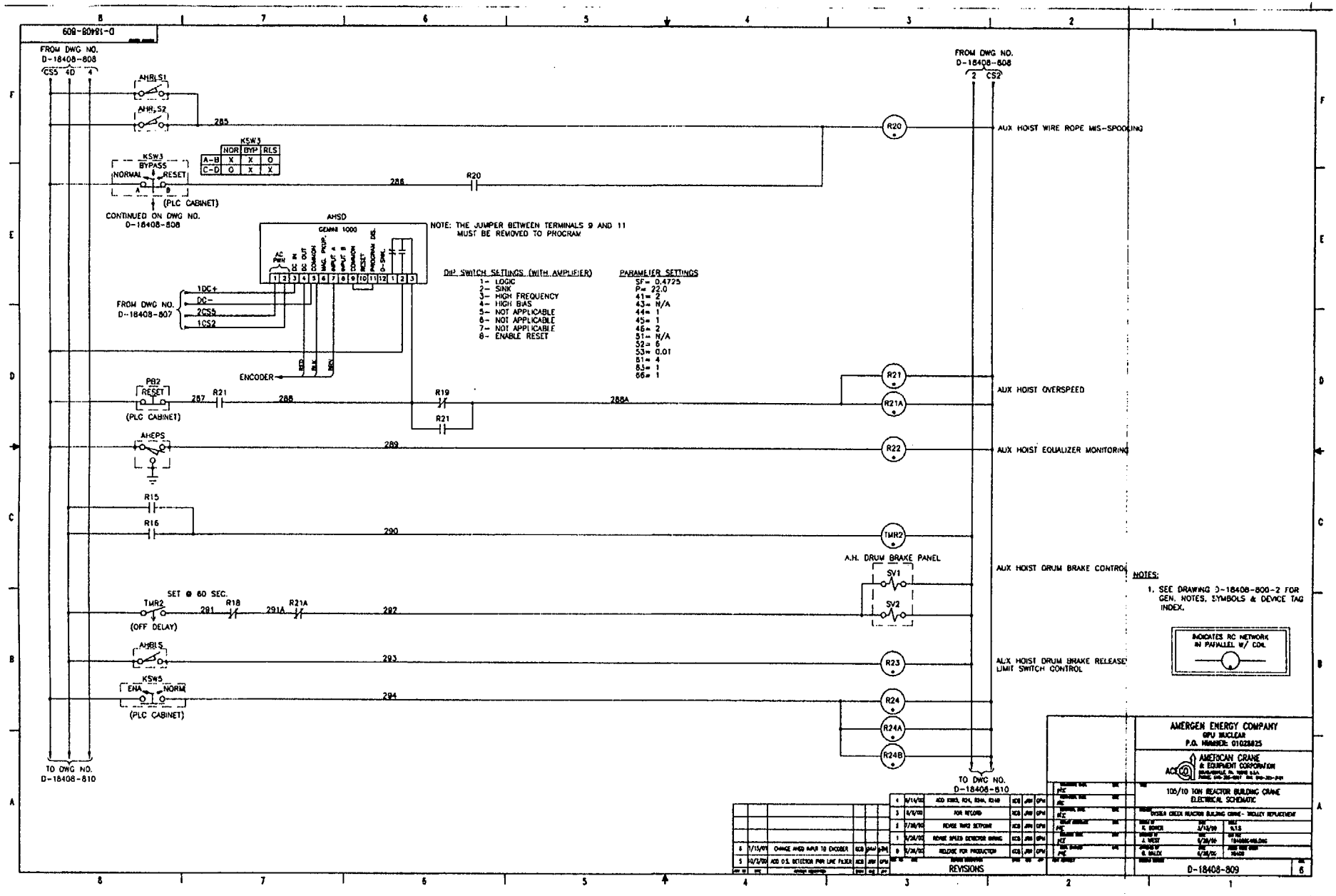
D-18408-809
FROM DWG NO. D-18408-808
CS5 4D 4
AHRLS1
AHR,S2
285
KSW3
NOR BYP RLS
A-B X X O
C-D O X X
KSW3
BYPASS
NORMAL RESET
(PLC CABINET)
CONTINUED ON DWG NO. D-18408-808
286
R20
AHSD
GEMM 1000
NOTE: THE JUMPER BETWEEN TERMINALS 9 AND 11 MUST BE REMOVED TO PROGRAM
DIP SWITCH SETTINGS (WITH AMPLIFIER)
1- LOGIC
2- SINK
3- HIGH FREQUENCY
4- HIGH BIAS
5- NOT APPLICABLE
6- NOT APPLICABLE
7- NOT APPLICABLE
8- ENABLE RESET
PARAMETER SETTINGS
SF= 0.4725
P= 22.0
41= 2
43= N/A
44= 1
45= 1
46= 2
51= N/A
52= 6
53= 0.01
61= 4
63= 1
66= 1
FROM DWG NO. D-18408-807
1DC+
DC-
2CS5
1CS2
ENCODER
PB2
RESET
(PLC CABINET)
287
R21
288
R19
R21
288A
R21
R21A
AUX HOIST OVERSPEED
AHEPS
289
R22
AUX HOIST EQUALIZER MONITORING
R15
R16
290
TMR2
A.H. DRUM BRAKE PANEL
SV1
SV2
AUX HOIST DRUM BRAKE CONTROL
SET @ 60 SEC.
TMR2
(OFF DELAY)
291
R18
291A
R21A
292
AHRLS
293
R23
AUX HOIST DRUM BRAKE RELEASE LIMIT SWITCH CONTROL
KSW5
EMA NORM
(PLC CABINET)
294
R24
R24A
R24B
TO DWG NO. D-18408-810
FROM DWG NO. D-18408-808
2 CS2
AUX HOIST WIRE ROPE MIS-SPOOLING
TO DWG NO. D-18408-810
NOTES:
1. SEE DRAWING D-18408-800-2 FOR GEN. NOTES, SYMBOLS & DEVICE TAG INDEX.
INDICATES RC NETWORK IN PARALLEL W/ COIL
REVISIONS
AMERGEN ENERGY COMPANY
GPU NUCLEAR
P.O. NUMBER: 01028825
AMERICAN CRANE & EQUIPMENT CORPORATION
105/10 TON REACTOR BUILDING CRANE ELECTRICAL SCHEMATIC
D-18408-809
6

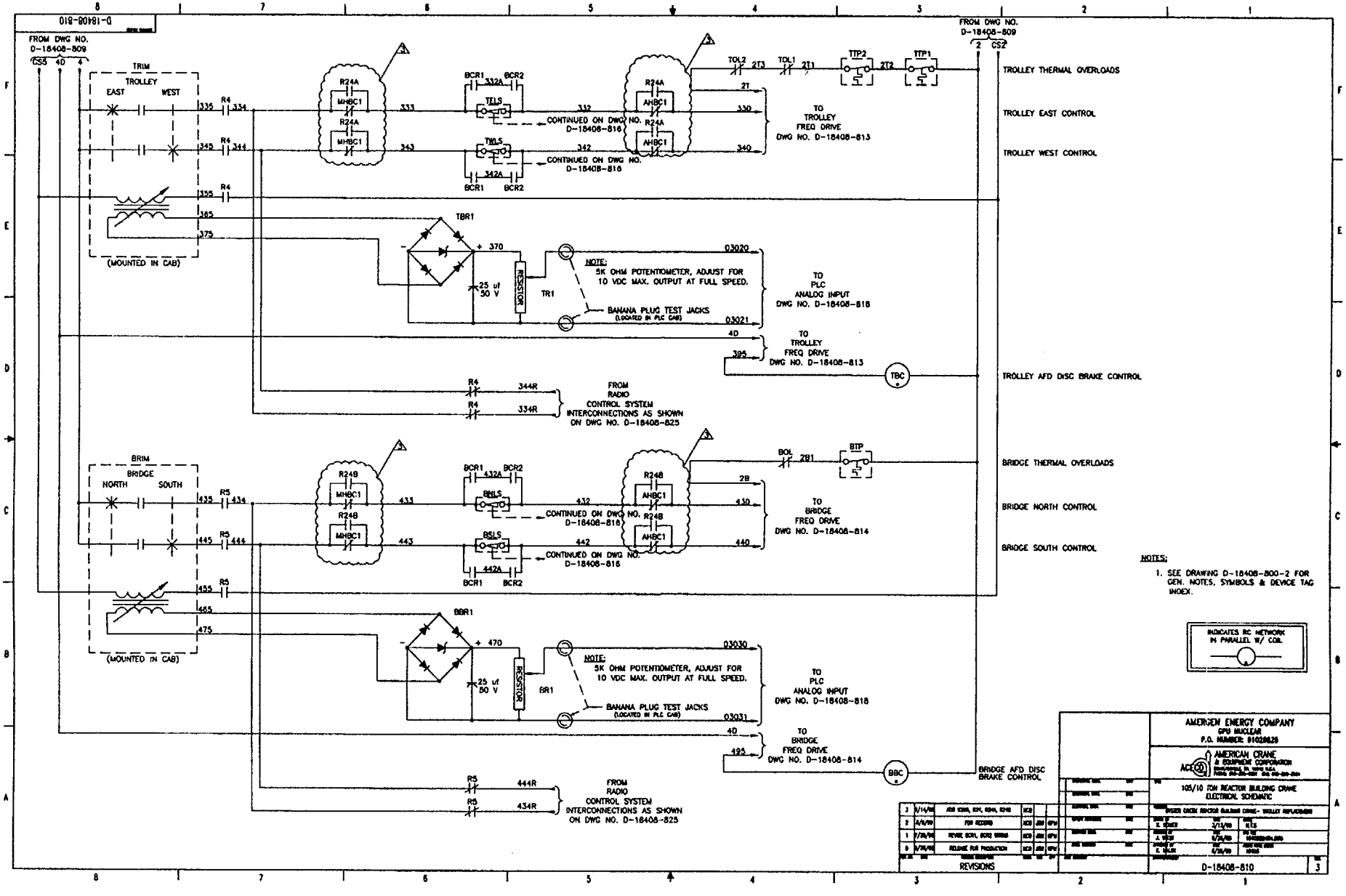
D-18408-810
FROM DWG NO. D-18408-809
CS5 4D 4
TRIM
TROLLEY
EAST
WEST
(MOUNTED IN CAB)
R24A
MHBC1
BCR1 332A BCR2
TELS
TWLS
342A
CONTINUED ON DWG NO. D-18408-816
AHBC1
TOL2 2T3
TOL1 2T1
TTP2 2T2
TTP1
FROM DWG NO. D-18408-809
2 CS2
TROLLEY THERMAL OVERLOADS
TROLLEY EAST CONTROL
TROLLEY WEST CONTROL
TO TROLLEY FREQ DRIVE DWG NO. D-18408-813
TBR1
25 uf 50 V
RESISTOR
TR1
NOTE:
5K OHM POTENTIOMETER, ADJUST FOR 10 VDC MAX. OUTPUT AT FULL SPEED.
BANANA PLUG TEST JACKS (LOCATED IN PLC CAB)
TO PLC ANALOG INPUT DWG NO. D-18408-818
TO TROLLEY FREQ DRIVE DWG NO. D-18408-813
TBC
TROLLEY AFD DISC BRAKE CONTROL
FROM RADIO CONTROL SYSTEM INTERCONNECTIONS AS SHOWN ON DWG NO. D-18408-825
BRIM
BRIDGE
NORTH
SOUTH
R24B
BCR1 432A BCR2
BNLS
BSLS
442A
BOL 2B1
BTP
BRIDGE THERMAL OVERLOADS
BRIDGE NORTH CONTROL
BRIDGE SOUTH CONTROL
TO BRIDGE FREQ DRIVE DWG NO. D-18408-814
BBR1
BR1
BBC
BRIDGE AFD DISC BRAKE CONTROL
NOTES:
1. SEE DRAWING D-18408-800-2 FOR GEN. NOTES, SYMBOLS & DEVICE TAG INDEX.
INDICATES RC NETWORK IN PARALLEL W/ COIL
AMERICAN ENERGY COMPANY
GPU NUCLEAR
P.O. NUMBER: 91028626
AMERICAN CRANE & EQUIPMENT CORPORATION
105/10 TON REACTOR BUILDING CRANE
ELECTRICAL SCHEMATIC
REVISIONS
D-18408-810
3

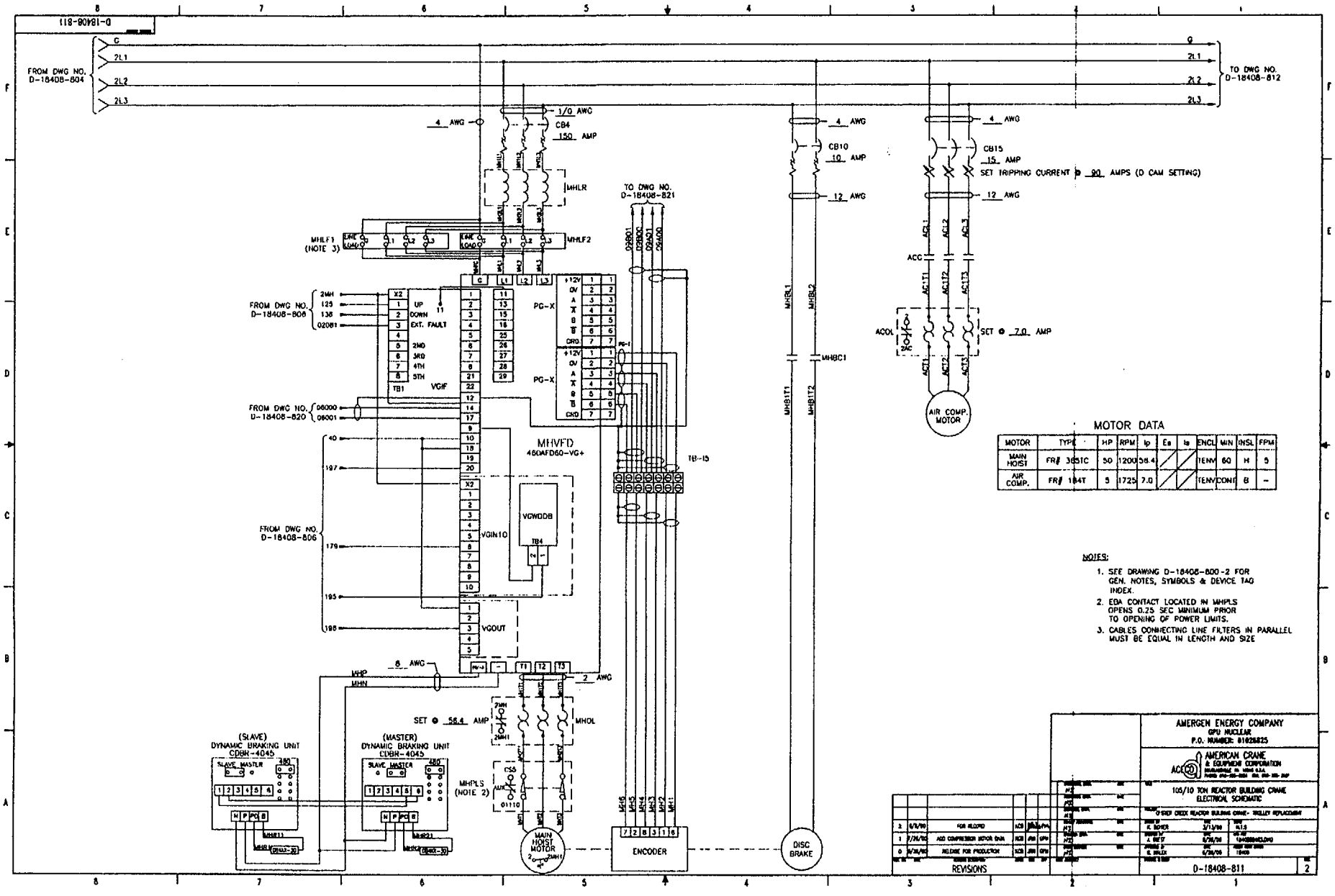
D-18408-811
FROM DWG NO. D-18408-804
TO DWG NO. D-18408-812
TO DWG NO. D-18408-821
FROM DWG NO. D-18408-808
FROM DWG NO. D-18408-820
FROM DWG NO. D-18408-806
MHVFD
460AFD60-VG+
VGIF
VGIN10
VGOUT
VGWDDB
PG-X
TB-15
MHLR
MHLF2
MHLF3 (NOTE 3)
CB4
150 AMP
CB10
10 AMP
CB15
15 AMP
SET TRIPPING CURRENT @ 90 AMPS (D CAM SETTING)
SET @ 7.0 AMP
SET @ 56.4 AMP
AIR COMP. MOTOR
MAIN HOIST MOTOR
DISC BRAKE
ENCODER
MHPLS (NOTE 2)
(SLAVE) DYNAMIC BRAKING UNIT CDBR-4045
(MASTER) DYNAMIC BRAKING UNIT CDBR-4045
MOTOR DATA
NOTES:
1. SEE DRAWING D-18408-800-2 FOR GEN. NOTES, SYMBOLS & DEVICE TAG INDEX.
2. EDA CONTACT LOCATED IN MHPLS OPENS 0.25 SEC MINIMUM PRIOR TO OPENING OF POWER LIMITS.
3. CABLES CONNECTING LINE FILTERS IN PARALLEL MUST BE EQUAL IN LENGTH AND SIZE
AMERGEN ENERGY COMPANY
GPU NUCLEAR
P.O. NUMBER: 81025825
AMERICAN CRANE & EQUIPMENT CORPORATION
105/10 TON REACTOR BUILDING CRANE ELECTRICAL SCHEMATIC
REVISIONS
D-18408-811
2

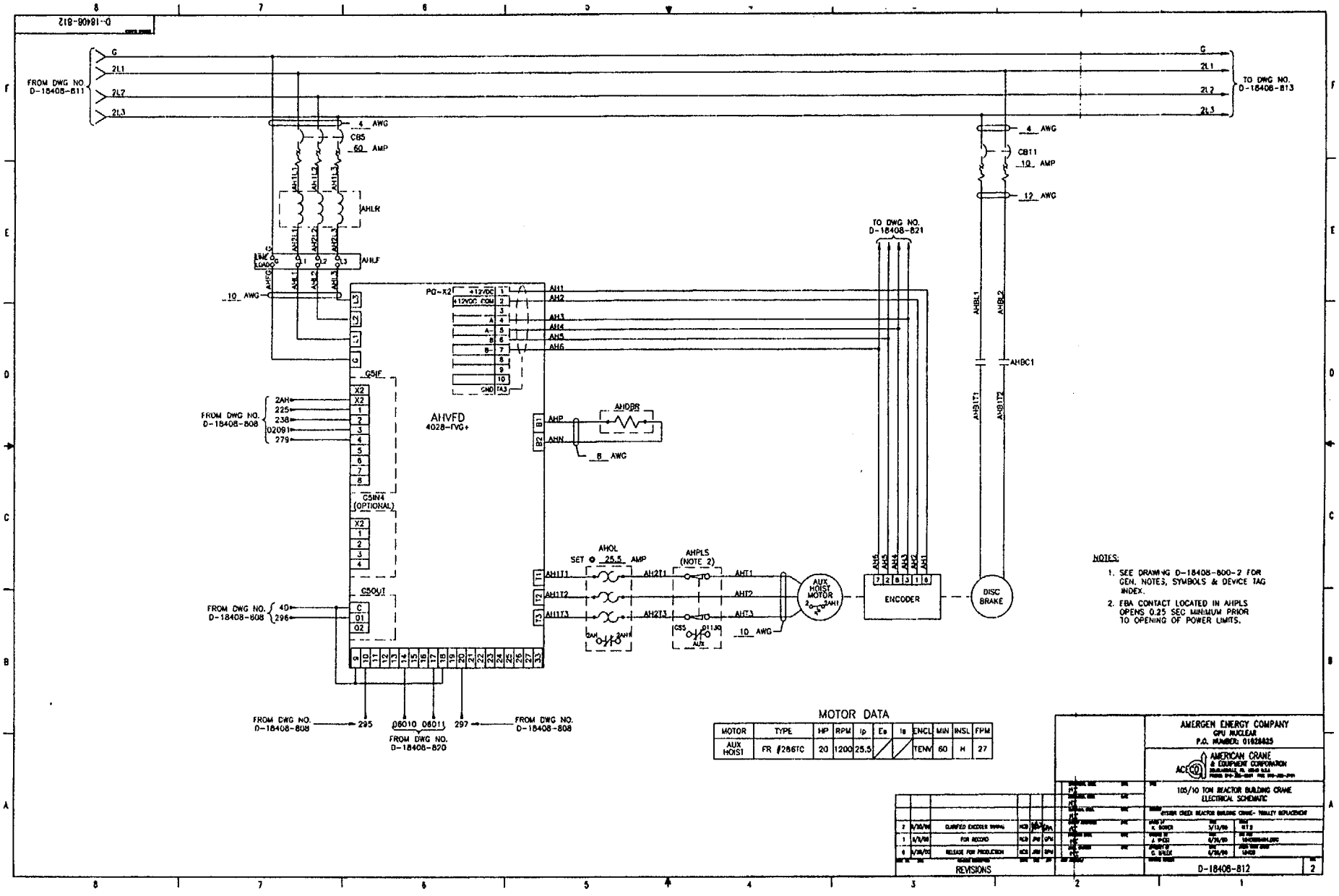
D-18408-812
FROM DWG NO. D-18408-811
TO DWG NO. D-18408-813
G
2L1
2L2
2L3
4 AWG
CB5
60 AMP
AHLR
AHLF
10 AWG
12 AWG
CB11
10 AMP
TO DWG NO. D-18408-821
AHBL1
AHBL2
AHBC1
AHBLT1
AHBLT2
PG-X2
+12VDC
+12VDC COM
AH1
AH2
AH3
AH4
AH5
AH6
GSIF
FROM DWG NO. D-18408-808
2AH
225
238
02091
279
AHVFD
4028-FVG+
AHDBR
AHP
AHN
8 AWG
GSIN4 (OPTIONAL)
GSOUT
FROM DWG NO. D-18408-808
40
296
AHOL
SET 25.5 AMP
AHPLS (NOTE 2)
AH1T1
AH1T2
AH1T3
AH2T1
AH2T3
AHT1
AHT2
AHT3
AUX HOIST MOTOR
ENCODER
DISC BRAKE
10 AWG
FROM DWG NO. D-18408-808
295
06010 06011
297
FROM DWG NO. D-18408-808
FROM DWG NO. D-18408-820
NOTES:
1. SEE DRAWING D-18408-800-2 FOR GEN. NOTES, SYMBOLS & DEVICE TAG INDEX.
2. FBA CONTACT LOCATED IN AHPLS OPENS 0.25 SEC MINIMUM PRIOR TO OPENING OF POWER LIMITS.
MOTOR DATA
MOTOR | TYPE | HP | RPM | Ip | Es | Is | ENCL | MIN | INSL | FPM
AUX HOIST | FR #286TC | 20 | 1200 | 25.5 | | | TENV | 60 | H | 27
REVISIONS
AMERGEN ENERGY COMPANY
GPU NUCLEAR
P.O. NUMBER: 01028825
AMERICAN CRANE & EQUIPMENT CORPORATION
105/10 TON REACTOR BUILDING CRANE
ELECTRICAL SCHEMATIC
D-18408-812
2

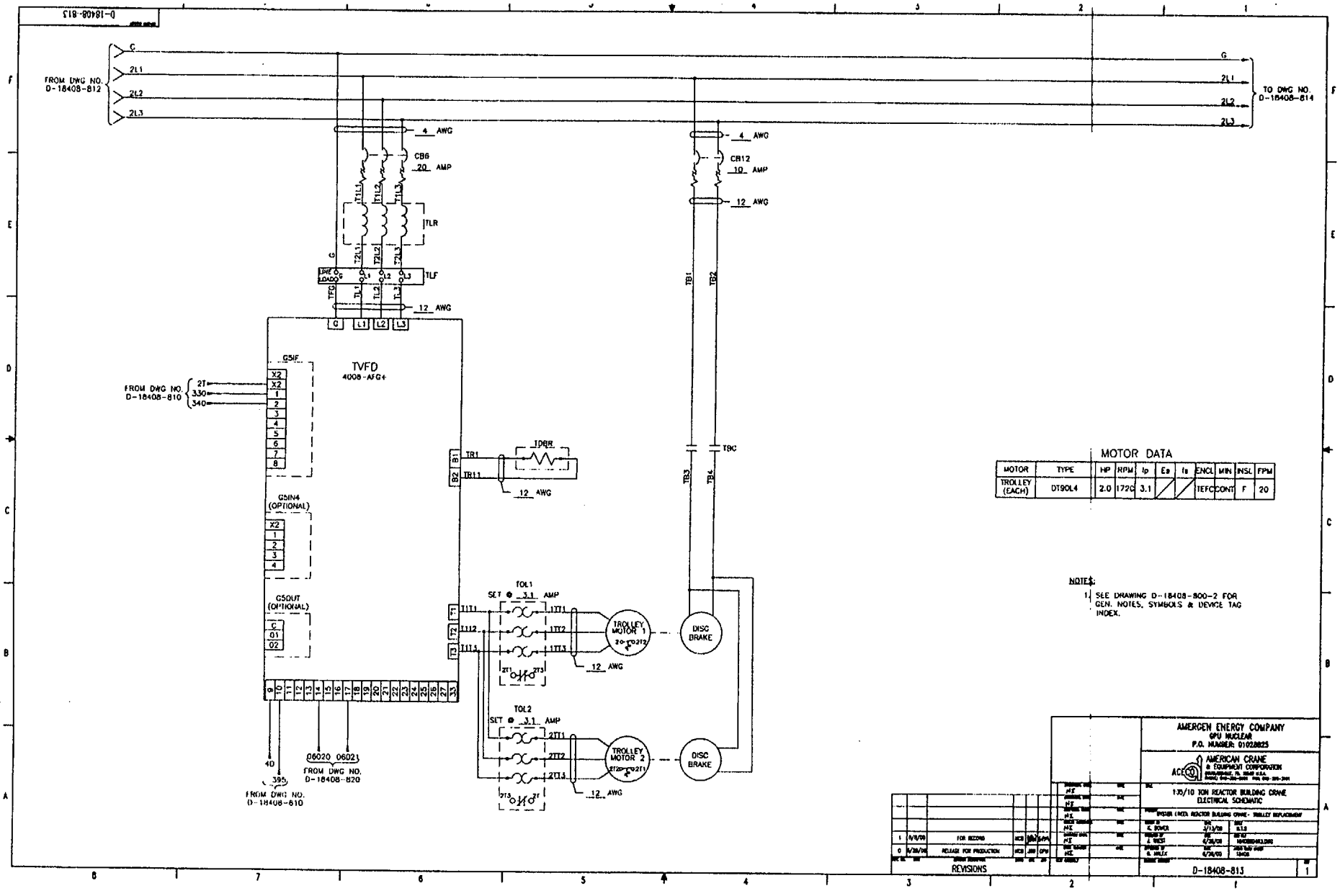

MOTOR DATA

MOTOR	TYPE	HP	RPM	Ip	Ea	Ia	ENCL	MIN	INSL	FPM
TROLLEY (EACH)	DT90L4	2.0	1720	3.1	/	/	TEFC	CONT	F	20

NOTES:

1. SEE DRAWING D-18408-800-2 FOR GEN. NOTES, SYMBOLS & DEVICE TAG INDEX.

REVISIONS				
1	4/11/00	FOR RECORD	HCB	JBW
0	4/28/00	RELEASE FOR PRODUCTION	HCB	JBW

AMERGEN ENERGY COMPANY
GPU NUCLEAR
P.O. NUMBER: 01020825

AMERICAN CRANE & EQUIPMENT CORPORATION

175/10 TON REACTOR BUILDING CRANE
ELECTRICAL SCHEMATIC

D-18408-813 | 1

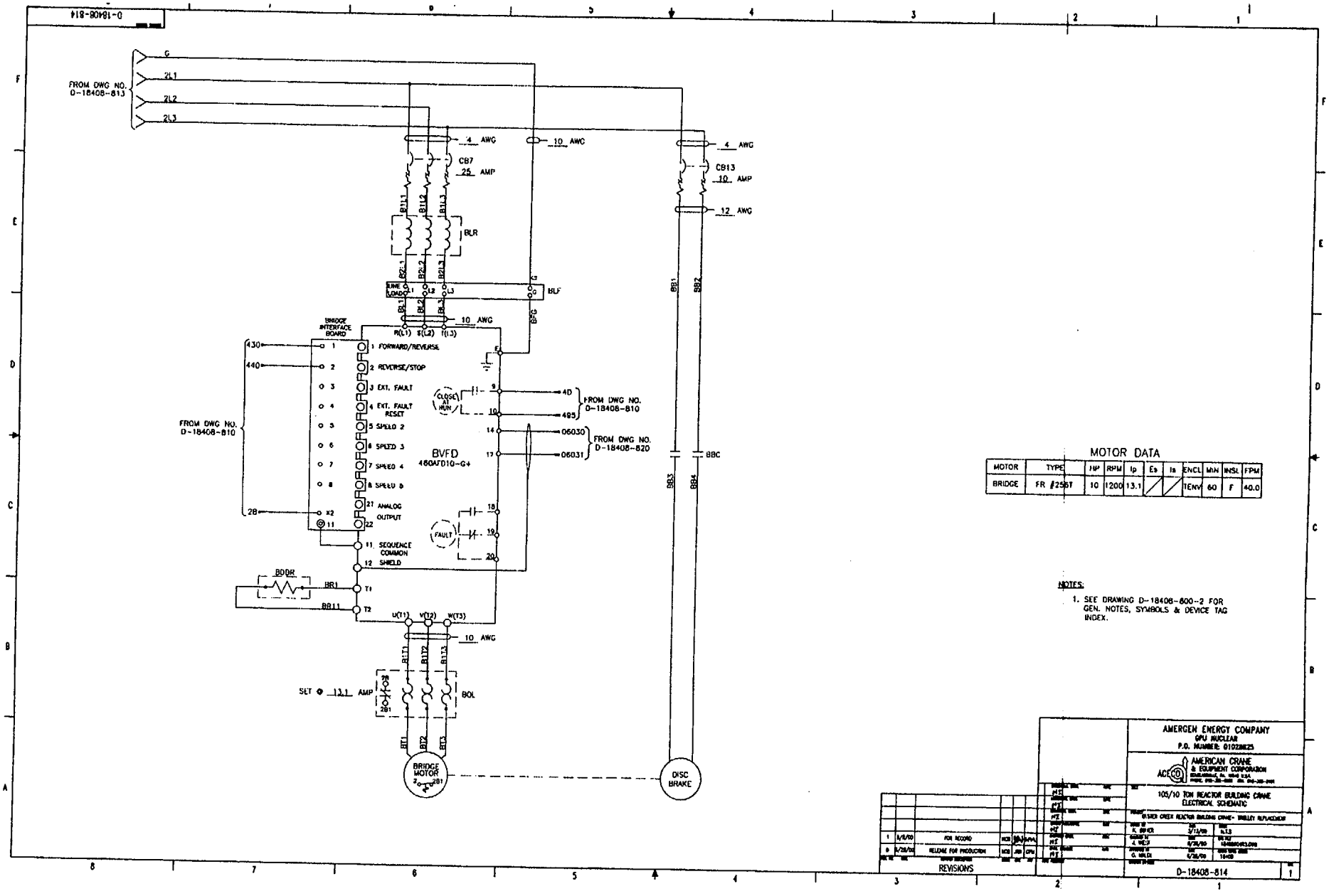

MOTOR DATA

MOTOR	TYPE	HP	RPM	Ip	Es	Ia	ENCL	MIN	INSL	FPM
BRIDGE	FR #25ST	10	1200	13.1	/	/	TENV	60	F	40.0

NOTES:

1. SEE DRAWING D-18408-800-2 FOR GEN. NOTES, SYMBOLS & DEVICE TAG INDEX.

REVISIONS

REV. NO.	DATE	DESCRIPTION	DRN	CHK	APP
1	5/5/90	FOR ACCORD	HCB	RB	AVA
0	5/28/90	RELEASE FOR PRODUCTION	HCB	JBR	GPM

AMERGEN ENERGY COMPANY
GPU NUCLEAR
P.O. NUMBER: 0102280625

AMERICAN CRANE & EQUIPMENT CORPORATION

105/10 TON REACTOR BUILDING CRANE
ELECTRICAL SCHEMATIC

D-18408-814

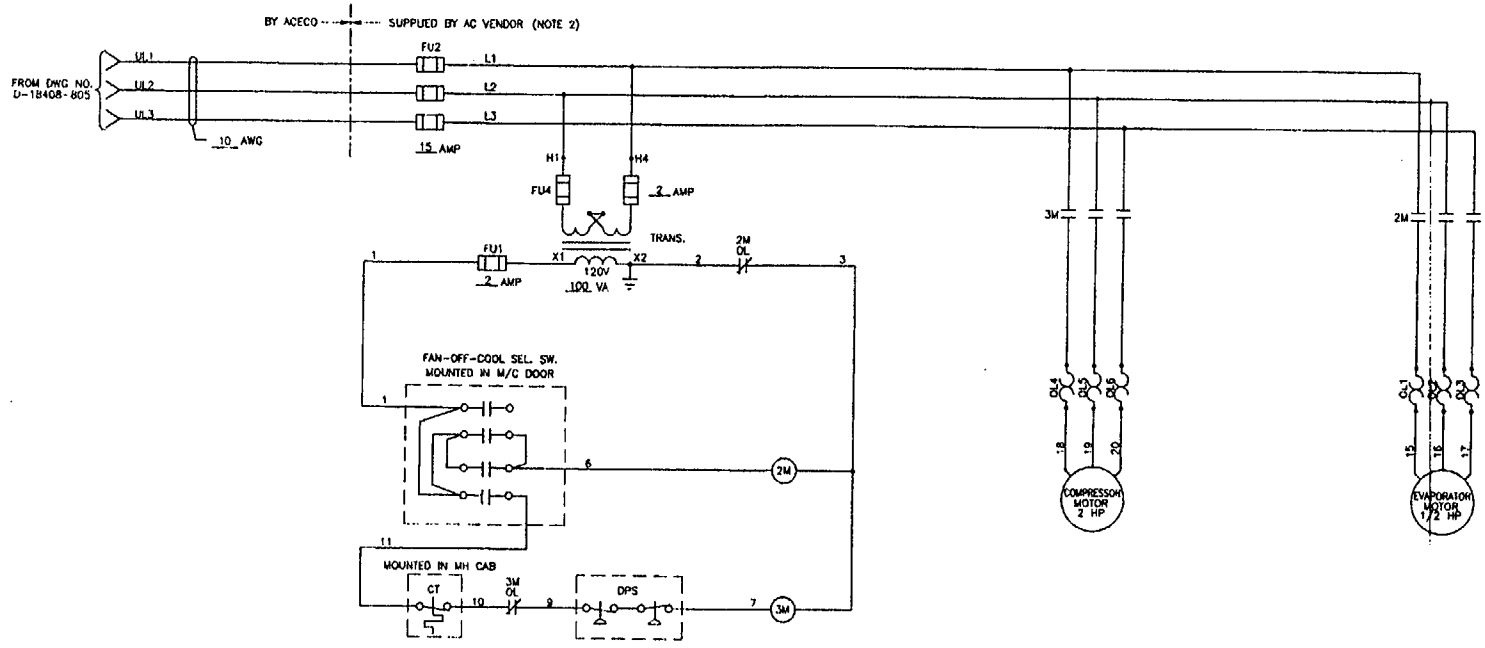

NOTES:

1. SEE DRAWING D-18408-800-2 FOR GEN. NOTES, SYMBOLS, & DEVICE TAG INDEX.
2. THIS DRAWING WAS REPRODUCED FROM A/C VENDOR'S DRAWING FOR CLARIFICATION OF ACECO INTERFACE. REFER TO NORDIC AIR INC. DRAWING NO. 14-0195 LOCATED IN CRANE MANUAL FOR COMPLETE WIRING AND M/C PANEL INTERCONNECTION DETAILS.

REV	DATE	DESCRIPTION	DRAWN	CHK	APPD
1	6/8/99	FOR RECORD	HCB	JRB	GPM
0	6/26/98	RELEASE FOR PRODUCTION	HCB	JRB	GPM

REVISIONS

AMERGEN ENERGY COMPANY
GPU NUCLEAR
P.O. NUMBER: 01028825

AMERICAN CRANE & EQUIPMENT CORPORATION

105/10 TON REACTOR BUILDING CRANE
ELECTRICAL SCHEMATIC

UNITED CHIEF REACTOR BUILDING CRANE- TROLLEY REPLACEMENT

DRAWN BY K. BIRCH 3/13/98
CHECKED BY A. TRUST 6/26/98
APPROVED BY G. HEALEY 6/26/98

D-18408-815 REV 1

RACK NO. 01
SLOT NO. 01

MODULE TYPE 1746-IA16
MODULE DESC INPUT

FROM DWG NO. D-18408-804 CS5

FROM DWG NO. D-18408-804 CS2

120 VAC INPUTS IA 16

R8	MAIN HOIST AFD DISC BRAKE FAULT	01000	IN 0	IN 1	01010	MAIN HOIST AFD GENERAL FAULT	R9
R11	MAIN HOIST WIRE ROPE MIS-SPOOL	01020	IN 2	IN 3	01030	RADIO/CAB XFER SWITCH	R1
CLBS	CAB LIMIT BYPASS SWITCH	01040	IN 4	IN 5	01050	BRIDGE NORTH LIMIT SWITCH (CONTINUED FROM DWG NO. D-18408-810)	BNLS
BSLS (CONTINUED FROM DWG NO. D-18408-810)	BRIDGE SOUTH LIMIT SWITCH	01060	IN 6	IN 7	01070	TROLLEY EAST LIMIT SWITCH (CONTINUED FROM DWG NO. D-18408-810)	TELS
TWLS (CONTINUED FROM DWG NO. D-18408-810)	TROLLEY WEST LIMIT SWITCH	01080	IN 8	IN 9	01090	RADIO LIMIT BYPASS SWITCH	LIMIT-BYPASS
R12	MAIN HOIST DRUM OVERSPEED	01100	IN 10	IN 11	01110	MAIN HOIST REDUNDANT LIMITS (MHLLS, MHPLS)	FROM DWG NO. D-18408-806
SVM	SYSTEM VOLTAGE MONITOR	01120	IN 12	IN 13	01130	AUX HOIST REDUNDANT LIMITS (AHLLS, AHPLS)	FROM DWG NO. D-18408-808
WEIGH SCALE TARE	RADIO WEIGH SCALE TARE SWITCH	01140	IN 14	IN 15	01150	MAIN HOIST EQUALIZER POSITION MONITOR	R13
			AC COM	AC COM			

TO DWG NO. D-18408-817

TO DWG NO. D-18408-817

NOTES:

1. SEE DRAWING D-18408-800-2 FOR GEN. NOTES, SYMBOLS & DEVICE TAG INDEX.

REV	DATE	DESCRIPTION	DRN	CHK	APV
1	8/4/99	FOR RECORD	RCB		
0	6/28/99	RELEASE FOR PRODUCTION	RCB	AMF	GPV

REVISIONS

AMERGEN ENERGY COMPANY
GPU NUCLEAR
P.O. NUMBER: 01028825

AMERICAN CRANE & EQUIPMENT CORPORATION

105/10 TON REACTOR BUILDING CRANE
ELECTRICAL SCHEMATIC

SYSTEM OYSTER CREEK REACTOR BUILDING CRANE - TROLLEY REPLACEMENT

DRAWN BY K. BUNER	3/13/99	N.T.S.
DESIGNED BY J. BLISS	6/28/99	
ENGINEER BY V. BALUK	6/28/99	

D-18408-816 REV 1

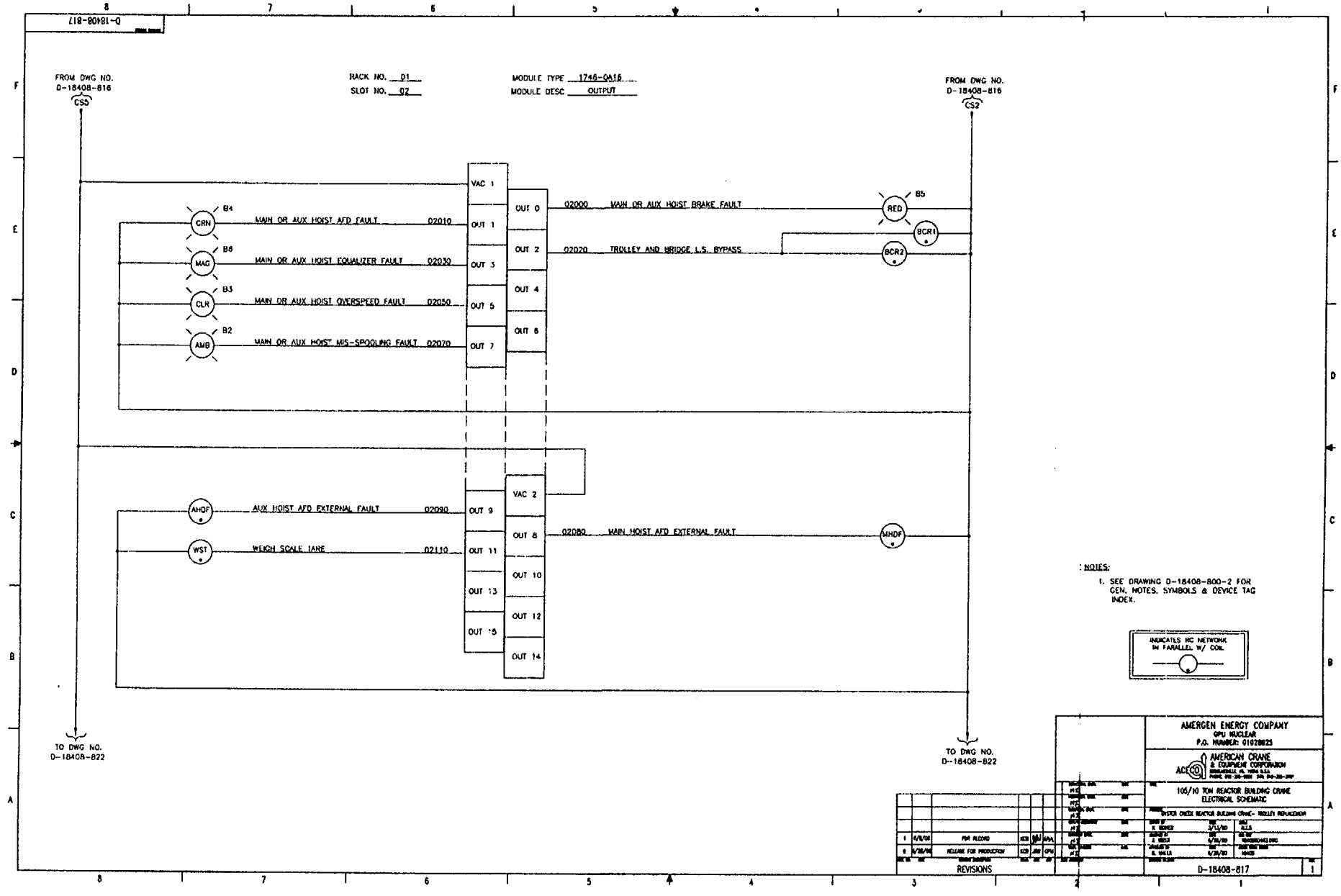
D-18408-817
FROM DWG NO. D-18408-816
CS3
RACK NO. D1
SLOT NO. 02
MODULE TYPE 1746-OA16
MODULE DESC OUTPUT
FROM DWG NO. D-18408-816
CS2
VAC 1
OUT 0
OUT 1
OUT 2
OUT 3
OUT 4
OUT 5
OUT 6
OUT 7
B4
CRN
MAIN OR AUX HOIST AFD FAULT
02010
B6
MAG
MAIN OR AUX HOIST EQUALIZER FAULT
02030
B3
CLR
MAIN OR AUX HOIST OVERSPEED FAULT
02050
B2
AMB
MAIN OR AUX HOIST MIS-SPOOLING FAULT
02070
02000
MAIN OR AUX HOIST BRAKE FAULT
B5
RED
BCR1
02020
TROLLEY AND BRIDGE L.S. BYPASS
BCR2
VAC 2
OUT 8
OUT 9
OUT 10
OUT 11
OUT 12
OUT 13
OUT 14
OUT 15
AHDF
AUX HOIST AFD EXTERNAL FAULT
02090
WST
WEIGH SCALE TARE
02110
02080
MAIN HOIST AFD EXTERNAL FAULT
MHDF
TO DWG NO. D-18408-822
TO DWG NO. D-18408-822
NOTES:
1. SEE DRAWING D-18408-800-2 FOR GEN. NOTES, SYMBOLS & DEVICE TAG INDEX.
INDICATES NO NETWORK IN PARALLEL W/ COIL
AMERGEN ENERGY COMPANY
GPU NUCLEAR
P.O. NUMBER: 01028825
AMERICAN CRANE & EQUIPMENT CORPORATION
105/10 TON REACTOR BUILDING CRANE ELECTRICAL SCHEMATIC
REVISIONS
D-18408-817

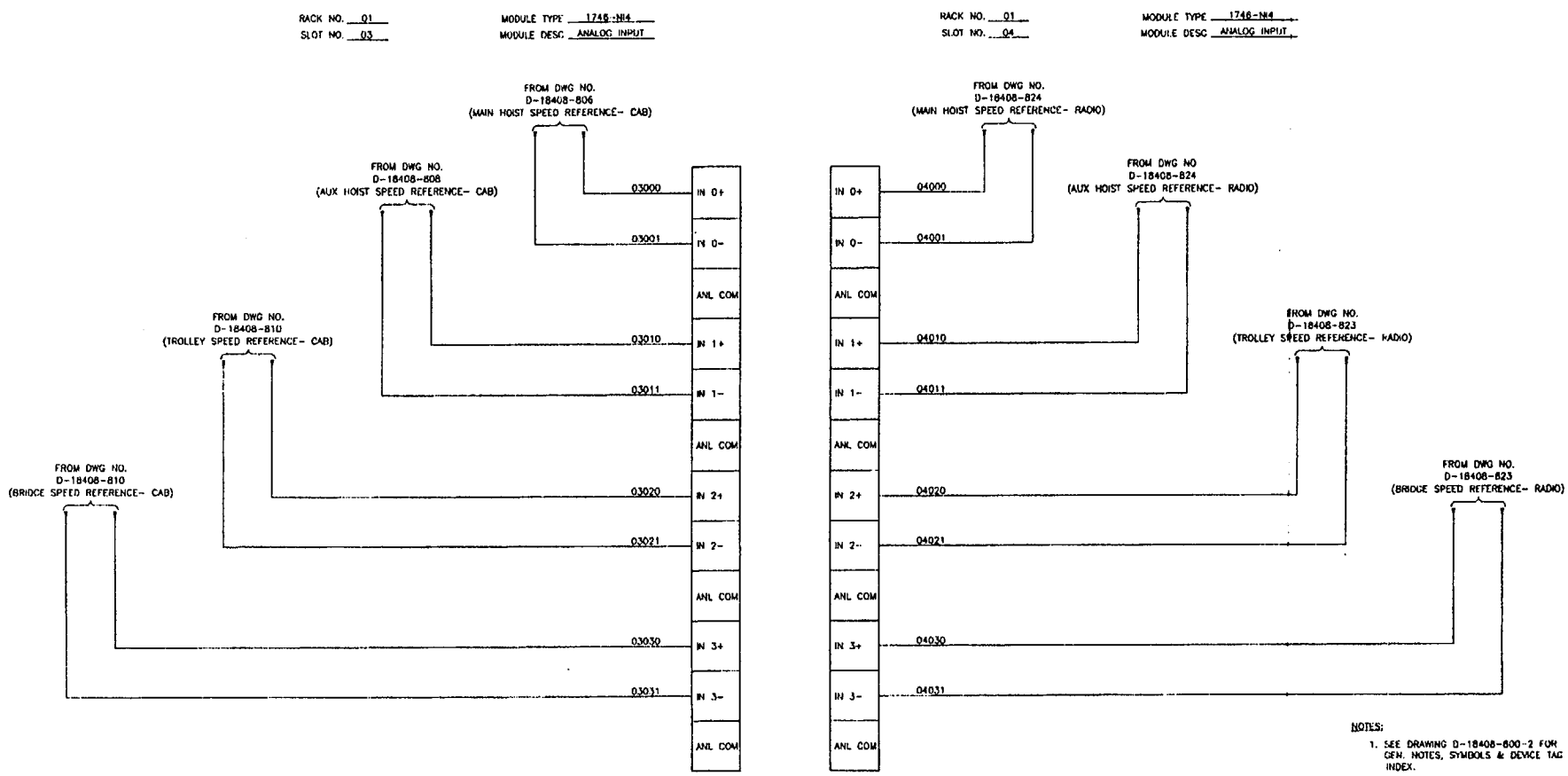

NOTES:

1. SEE DRAWING D-18408-600-2 FOR GEN. NOTES, SYMBOLS & DEVICE TAG INDEX.

REV.	DATE	REVISIONS	DRN	CK	APP
1	5/9/00	FOR RECORD	KCB		
0	4/28/00	RELEASE FOR PRODUCTION	KCB	JMD	GPW

AMERGEN ENERGY COMPANY
GPU NUCLEAR
P.O. NUMBER: 01028825

AMERICAN CRANE & EQUIPMENT CORPORATION

105/10 TON REACTOR BUILDING CRANE
ELECTRICAL SCHEMATIC

OYSTER CREEK REACTOR BUILDING CRANE- TROLLEY REPLACEMENT

K. KONER 3/13/00 K.T.S.
J. DIESI 4/26/00 1946DBD-BUILDING
G. HALDI 4/26/00 18408

D-18408-818 REV. 1

D-18406-819

RACK NO. 01
SLOT NO. 05

MODULE TYPE 1746-N14
MODULE DESC ANALOG INPUT

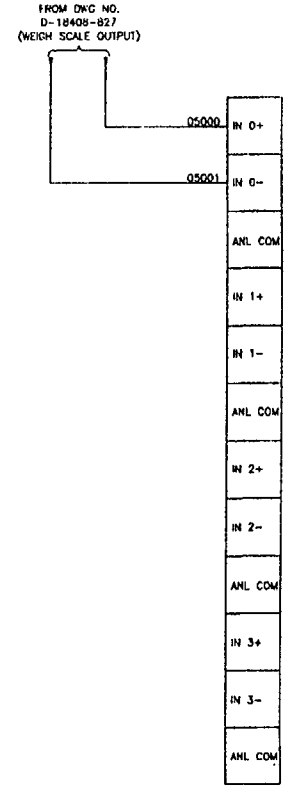

NOTES:

1. SEE DRAWING D-18406-800-2 FOR GEN. NOTES, SYMBOLS & DEVICE TAG INDEX.

REV.	DATE	DESCRIPTION	DRAWN	CHK'D	APPD
1	5/8/00	FOR RECORD	KCB		
0	3/29/00	RELEASE FOR PRODUCTION	KCB	JPW	CPW

REVISIONS

AMERGEN ENERGY COMPANY
GPU NUCLEAR
P.O. NUMBER: 01020825

AMERICAN CRANE & EQUIPMENT CORPORATION

105/10 TON REACTOR BUILDING CRANE
ELECTRICAL SCHEMATIC

DWG TITLE: DIVISION CHECK REACTOR BUILDING CRANE- TROLLEY REPLACEMENT

DRAWN BY: E. BOWER 3/13/00
DESIGNED BY: J. VACHT 6/28/00
SPONSOR BY: G. MALEK 6/28/00

D-18406-819 REV 1

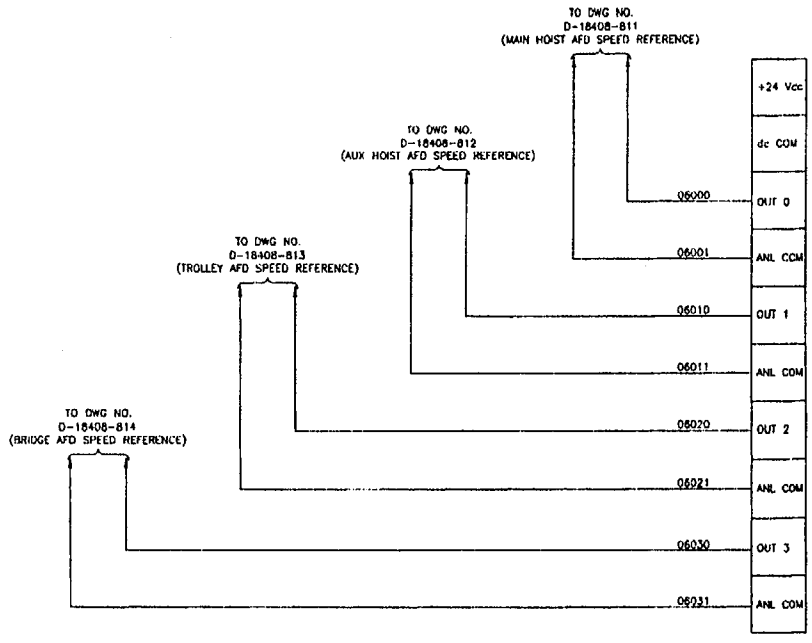

NOTES:

1. SEE DRAWING D-18408-800-2 FOR GEN. NOTES, SYMBOLS & DEVICE TAG INDEX.

1	6/6/00	FOR RECORD	HCB	MJA	GPM
0	5/26/00	RELEASE FOR PRODUCTION	HCB	JMF	GPM

REVISIONS

AMERGEN ENERGY COMPANY
GPU NUCLEAR
P.O. NUMBER: 01028425

AMERICAN CRANE & EQUIPMENT CORPORATION

105/10 TON REACTOR BUILDING CRANE
ELECTRICAL SCHEMATIC

D-18408-820 1

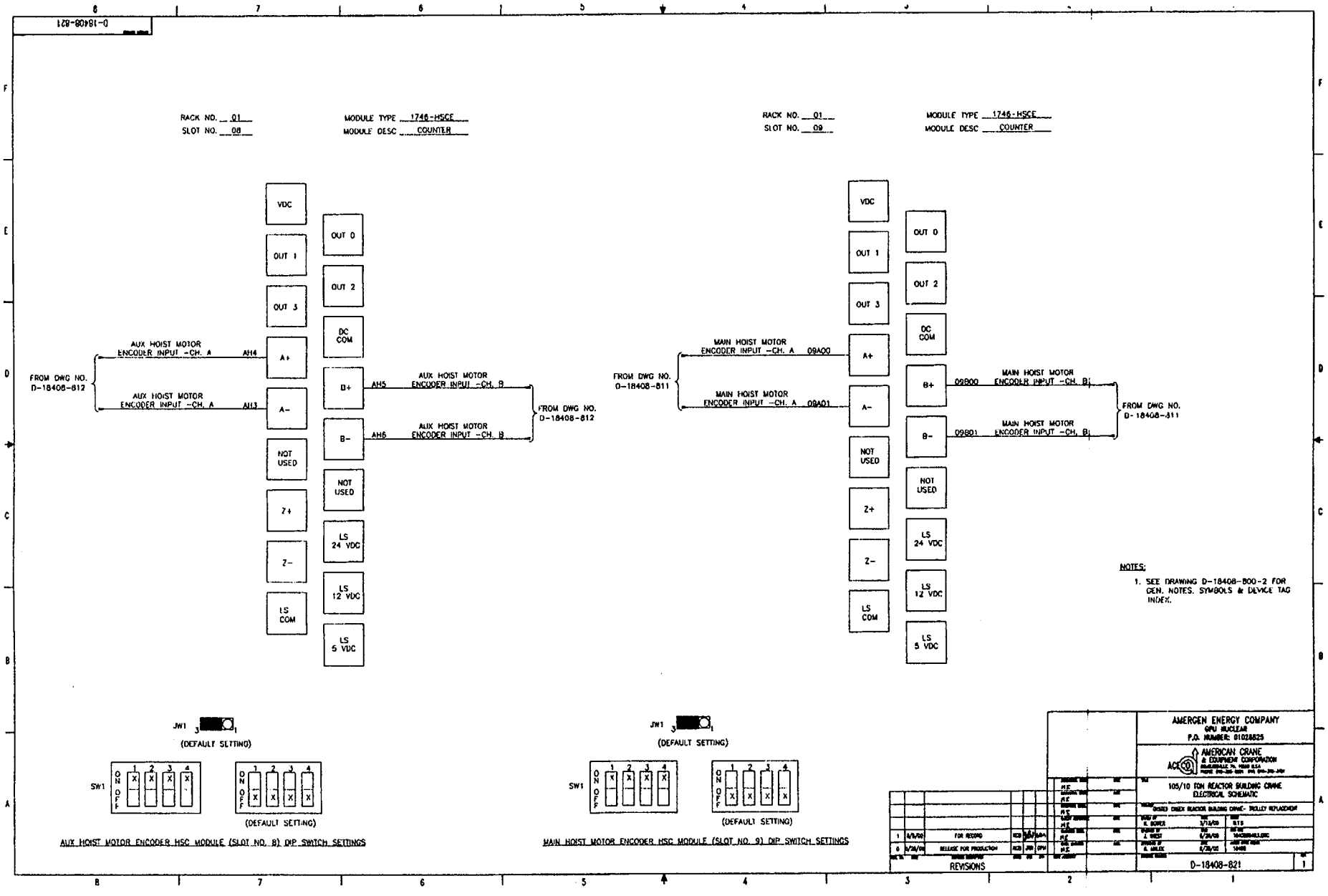
D-18408-821
RACK NO. 01
SLOT NO. 08
MODULE TYPE 1746-HSCE
MODULE DESC COUNTER
FROM DWG NO. D-18408-812
AUX HOIST MOTOR ENCODER INPUT -CH. A AH4
AUX HOIST MOTOR ENCODER INPUT -CH. A AH3
VDC
OUT 1
OUT 3
A+
A-
NOT USED
Z+
Z-
LS COM
OUT 0
OUT 2
DC COM
B+
B-
NOT USED
LS 24 VDC
LS 12 VDC
LS 5 VDC
AH5 AUX HOIST MOTOR ENCODER INPUT -CH. B
AH6 AUX HOIST MOTOR ENCODER INPUT -CH. B
FROM DWG NO. D-18408-812
RACK NO. 01
SLOT NO. 09
MODULE TYPE 1746-HSCE
MODULE DESC COUNTER
FROM DWG NO. D-18408-811
MAIN HOIST MOTOR ENCODER INPUT -CH. A 09A00
MAIN HOIST MOTOR ENCODER INPUT -CH. A 09A01
VDC
OUT 1
OUT 3
A+
A-
NOT USED
Z+
Z-
LS COM
OUT 0
OUT 2
DC COM
B+
B-
NOT USED
LS 24 VDC
LS 12 VDC
LS 5 VDC
09B00 MAIN HOIST MOTOR ENCODER INPUT -CH. B
09B01 MAIN HOIST MOTOR ENCODER INPUT -CH. B
FROM DWG NO. D-18408-811
NOTES:
1. SEE DRAWING D-18408-800-2 FOR GEN. NOTES, SYMBOLS & DEVICE TAG INDEX.
JW1
(DEFAULT SETTING)
SW1
ON OFF
(DEFAULT SETTING)
AUX HOIST MOTOR ENCODER HSC MODULE (SLOT NO. 8) DIP SWITCH SETTINGS
JW1
(DEFAULT SETTING)
SW1
ON OFF
(DEFAULT SETTING)
MAIN HOIST MOTOR ENCODER HSC MODULE (SLOT NO. 9) DIP SWITCH SETTINGS
1 6/8/00 FOR RECORD
0 5/26/00 RELEASE FOR PRODUCTION
REVISIONS
AMERGEN ENERGY COMPANY
GPU NUCLEAR
P.O. NUMBER: 01028825
AMERICAN CRANE & EQUIPMENT CORPORATION
105/10 TON REACTOR BUILDING CRANE
ELECTRICAL SCHEMATIC
D-18408-821
1

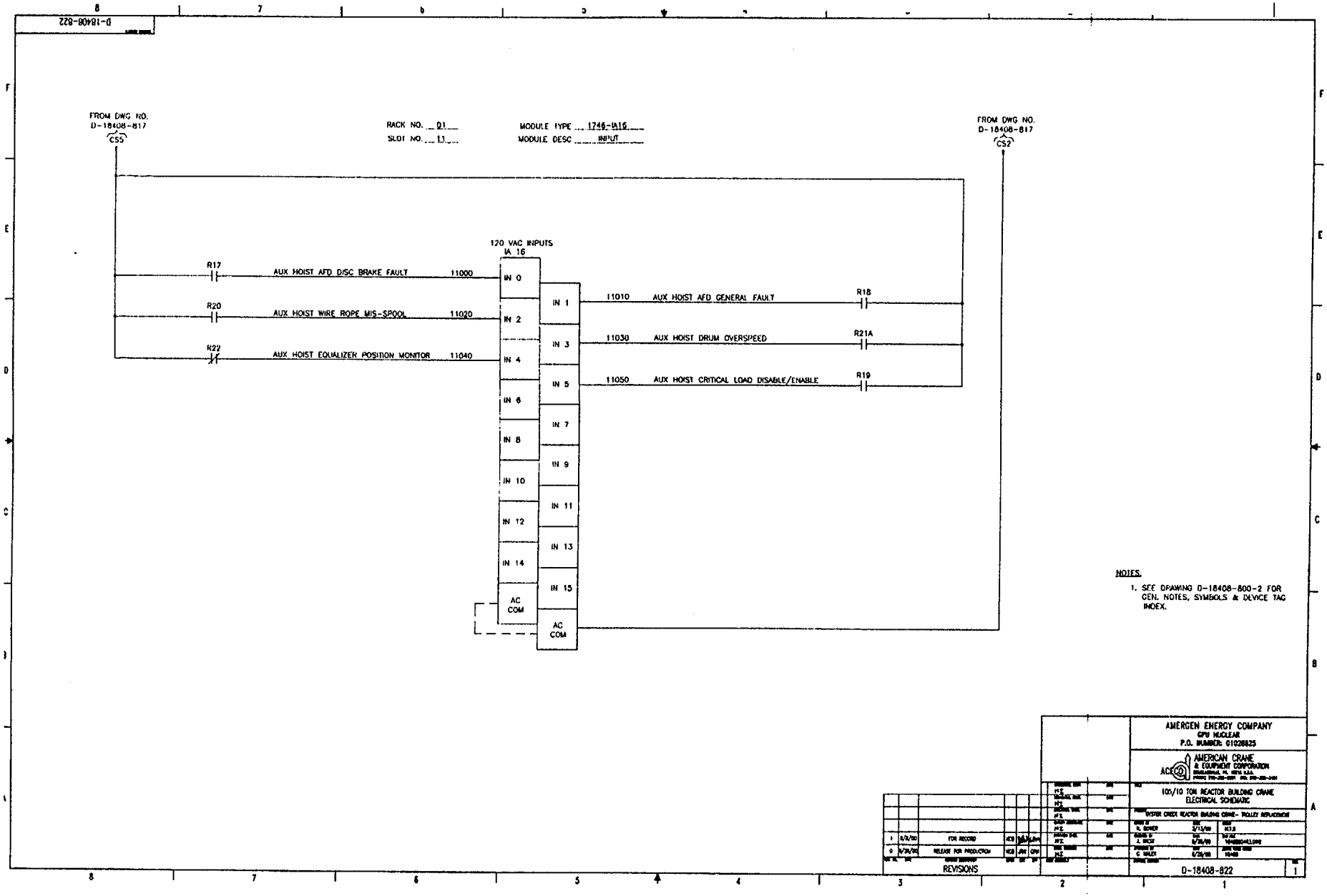
D-18408-822
FROM DWG NO. D-18408-817 CS5
RACK NO. 01
SLOT NO. 11
MODULE TYPE 1746-IA16
MODULE DESC INPUT
FROM DWG NO. D-18408-817 CS2
120 VAC INPUTS IA 16
R17
AUX HOIST AFD DISC BRAKE FAULT
11000
R20
AUX HOIST WIRE ROPE MIS-SPOOL
11020
R22
AUX HOIST EQUALIZER POSITION MONITOR
11040
IN 0
IN 1
IN 2
IN 3
IN 4
IN 5
IN 6
IN 7
IN 8
IN 9
IN 10
IN 11
IN 12
IN 13
IN 14
IN 15
AC COM
AC COM
11010
AUX HOIST AFD GENERAL FAULT
R18
11030
AUX HOIST DRUM OVERSPEED
R21A
11050
AUX HOIST CRITICAL LOAD DISABLE/ENABLE
R19
NOTES:
1. SEE DRAWING D-18408-800-2 FOR GEN. NOTES, SYMBOLS & DEVICE TAG INDEX.
AMERGEN ENERGY COMPANY
GPU NUCLEAR
P.O. NUMBER: 01028825
AMERICAN CRANE & EQUIPMENT CORPORATION
105/10 TON REACTOR BUILDING CRANE ELECTRICAL SCHEMATIC
OYSTER CREEK REACTOR BUILDING CRANE- TROLLEY REPLACEMENT
R. BOWER 3/12/99
J. BRICK 6/28/99
C. MALEY 6/28/99
D-18408-822
1
FOR RECORD
RELEASE FOR PRODUCTION
REVISIONS

D-18408-823

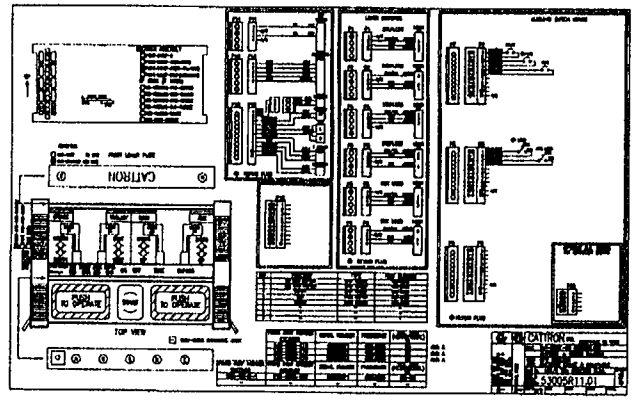

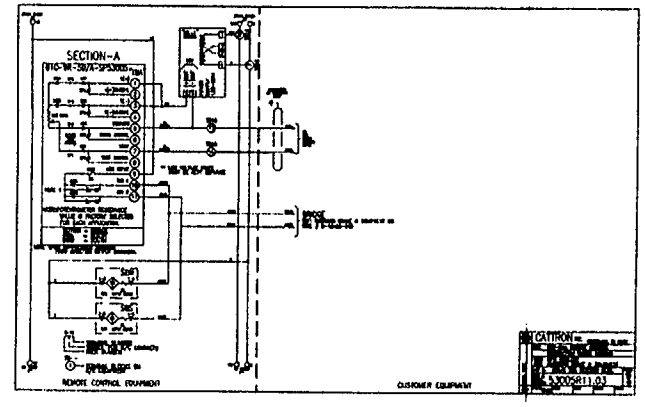

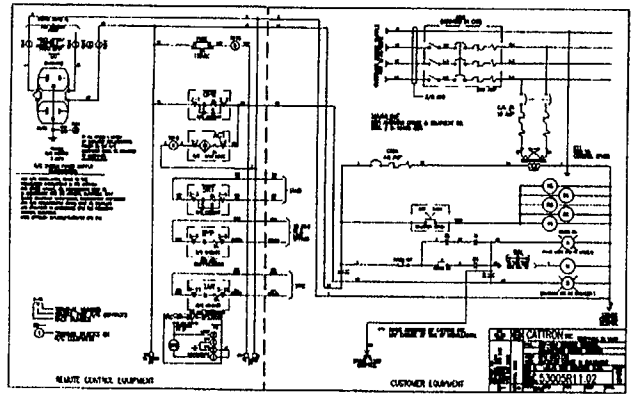

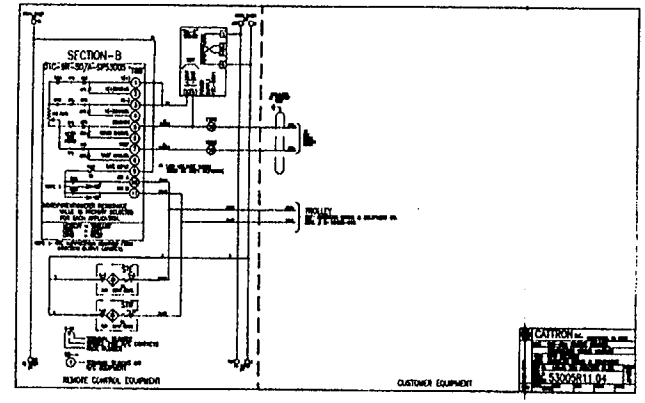

REV. NO.	DATE	REVISIONS	DRAWN BY	CHK'D BY	APP'D BY
1	6/8/99	FOR RECORD	RCB	[illegible]	[illegible]
0	6/28/99	RELEASE FOR PRODUCTION	RCB	JBW	CPN

AMERGEN ENERGY COMPANY
GPU NUCLEAR
P.O. NUMBER: 01028825

AMERICAN CRANE & EQUIPMENT CORPORATION
ACECO
[illegible] PA. [illegible] U.S.A.
PHONE: [illegible] FAX: [illegible]

105/10 TON REACTOR BUILDING CRANE
CATTRON RADIO INTERCONNECTION DRAWINGS

SHEET TITLE: INTERIM CREEK REACTOR BUILDING CRANE - TROLLEY REPLACEMENT

DRAWN BY K. BOWER	DATE 6/28/99	SCALE N.T.S.
DESIGNED BY J. WEISS	DATE 6/28/99	DWG SIZE 1640(W)X1219 (H)
CHECKED BY G. WALES	DATE 6/28/99	DWG SCALE 1:1

DRAWING NUMBER: D-18408-823 REV. 1

I-47 of 53

D-18408-824

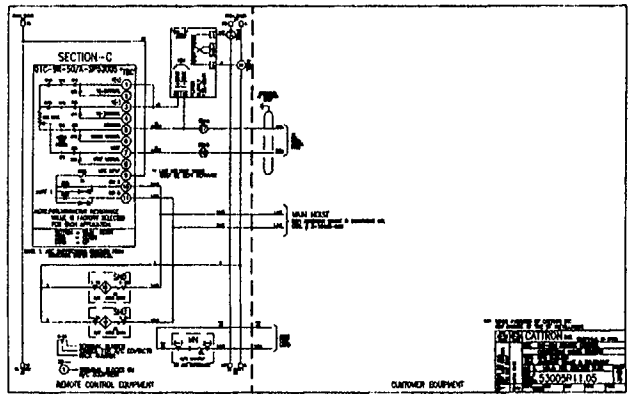

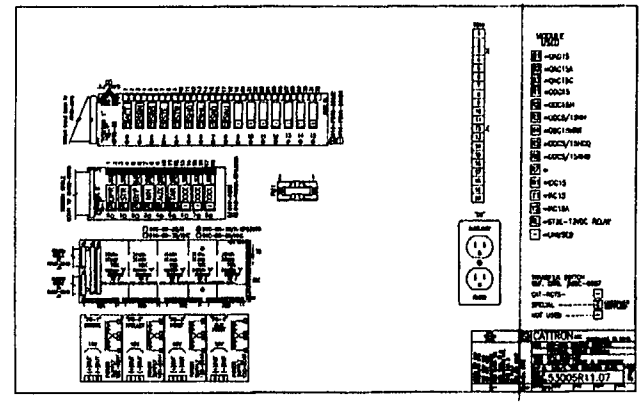

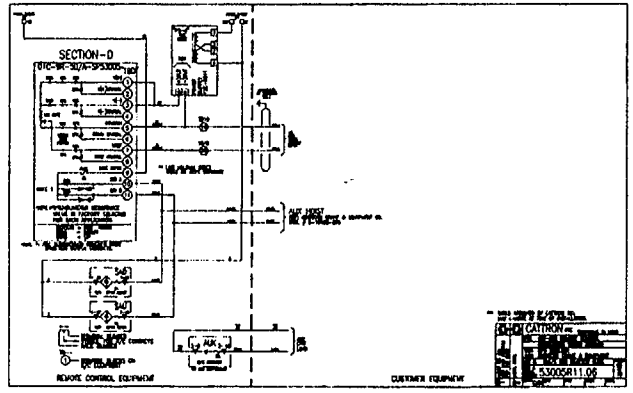

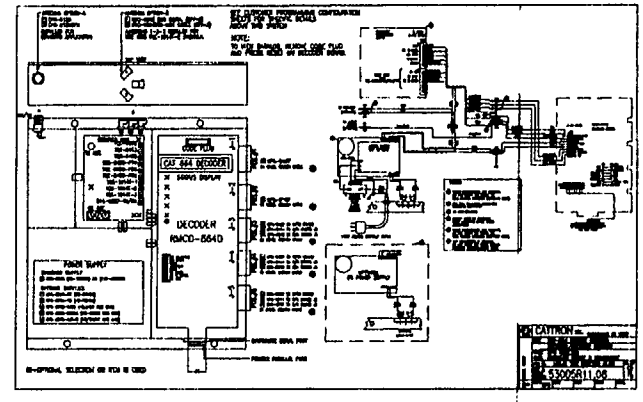

AMERGEN ENERGY COMPANY
GPU NUCLEAR
P.O. NUMBER: 01028835

AMERICAN CRANE & EQUIPMENT CORPORATION

105/10 TON REACTOR BUILDING CRANE
CATTRON RADIO INTERCONNECTION DRAWINGS

D-18408-824

REV	DATE	DESCRIPTION	DRN	CHK	APVD
1	6/8/00	FOR RECORD	KCB	[illegible]	[illegible]
0	6/26/00	RELEASE FOR PRODUCTION	KCB	JRR	GPN

REVISIONS

D-18408-825

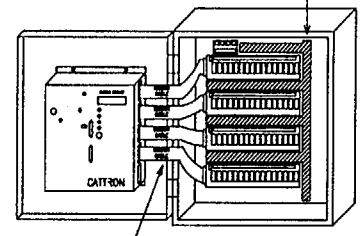

WIRE CONNECTIONS IN RECEIVER/DECODER CABINET

WIRE CODE	DESTINATION DEVICE	TERM	DEVICE	TERM	WIRE SIZE	REV
C1	CO	1	TB10	1	16	
2	CO	4,3	TB10	2		
	TB10	6	TB1	1		
* 2	TB10	8	TB10	7		
*	TB10	9				
2	PS-1	4	TB10	7		
	PS-2	4				
2	PS-3	4	TB10	8		
	PS-4	4				
* 2	TB1	1	TB1	3		
	TB1	5	TB1	7		
	TB1	9	TB1	11		
	TB1	13	TB1	15		
	TB1	17				
1R	CO	3	TB10	4		
	FUSE	1	TB2	1		
	TB4	6	TB8	6		
	TBC	8	TB8	8		
GRN	CO	GND	TB10	5		
1HP	FUSE	2	TB10	9		
* 1HP	TB10	9	TB10	10		
*	TB10	11				
1HP	PS-1	3	TB10	10		
	PS-2	1				
1HP	PS-3	1	TB10	11		
	PS-4	1				
4R	TB1	2	TB2	2		
1P	TB4	1	TB4	3		
	PS-1	3				
04C31	TB4	5	PS-1	8		
43AR	TB4	10	TB1	4		
44AR	TB4	11	TB1	8		
1P	TB8	1	TB8	3		
	PS-2	3				
04C31	TB8	5	PS-2	8		
33AR	TB8	10	TB1	8		
34AR	TB8	11	TB1	10		
1HP	TBC	1	TBC	3		
	PS-3	5				

WIRE CONNECTIONS IN RECEIVER/DECODER CAB. (CONT.)

WIRE CODE	DESTINATION DEVICE	TERM	DEVICE	TERM	WIRE SIZE	REV
04C01	TBC	3	PS-3	6	16	
11AR	TBC	10	TB1	12		
13AR	TBC	11	TB1	14		
4P	TB0	1	TB0	3		
	PS-4	5				
04011	TB0	5	PS-4	6		
24AR	TB0	10	TB1	16		
23AR	TB0	11	TB1	18		
04031	TBA	3	TB10	13		
04030	TBA	7	TB10	14		
04021	TBB	5	TB10	15		
04020	TBB	7	TB10	16		
04001	TBC	3	TB10	17		
04000	TBC	7	TB10	18		
04011	TBD	5	TB10	19		
04010	TBD	7	TB10	20		

WIRING COMPLETED BY CATTRON INC.

WIRING TO BE COMPLETED BY CUSTOMER

WIRE CONNECTIONS IN CONDUIT REC./DEC. CAB. TO AUXILIARY POWER

WIRE CODE	DESTINATION DEVICE	TERM	DEVICE	TERM	WIRE SIZE	REV
2	TB10	2	P.SWCH	2	14	
C1	TB10		P.SWCH	C1		

WIRE CONNECTIONS IN CONDUIT REC./DEC. CAB. TO MAINLINE

WIRE CODE	DESTINATION DEVICE	TERM	DEVICE	TERM	WIRE SIZE	REV
2	TB10	2	TB-M	2	14	
1R	TB10	4	TB-M	1R		
4R	TB2	3	TB-M	4R		
CSS	TB2	5	TB-M	CSS		

WIRE CONNECTIONS IN CONDUIT REC./DEC. CAB. TO ALARM

WIRE CODE	DESTINATION DEVICE	TERM	DEVICE	TERM	WIRE SIZE	REV
03	TB2	3	ALARM	03	14	
04	TB2	4	ALARM	04		

WIRE CONNECTIONS IN CONDUIT REC./DEC. CAB. TO LIMIT BYPASS

WIRE CODE	DESTINATION DEVICE	TERM	DEVICE	TERM	WIRE SIZE	REV
01WR	TB2	6	BYPASS	01WR	14	

WIRE CONNECTIONS IN CONDUIT REC./DEC. CAB. TO TARE

WIRE CODE	DESTINATION DEVICE	TERM	DEVICE	TERM	WIRE SIZE	REV
CSS	TB2	11	TARE	CSS	14	1
01140	TB2	12	TARE	01140		1

WIRE CONNECTIONS IN CONDUIT REC./DEC. CAB. TO BRIDGE

WIRE CODE	DESTINATION DEVICE	TERM	DEVICE	TERM	WIRE SIZE	REV
43AR	TB1	4	TB-B	43-R	14	
44AR	TB1	8	TB-B	44-R		

WIRE CONNECTIONS IN CONDUIT REC./DEC. CAB. TO TROLLEY

WIRE CODE	DESTINATION DEVICE	TERM	DEVICE	TERM	WIRE SIZE	REV
33AR	TB1	8	TB-T	33-R	14	
34AR	TB1	10	TB-T	34-R		

WIRE CONNECTIONS IN CONDUIT REC./DEC. CAB. TO MAIN HOIST

WIRE CODE	DESTINATION DEVICE	TERM	DEVICE	TERM	WIRE SIZE	REV
14AR	TB1	12	TB-MH	14AR	14	
13AR	TB1	14	TB-MH	13-R		

NOTE: USE ONLY CROSS-LINKED POLYETHYLENE WIRE INSULATION. PVC INSULATION IS NOT PERMITTED.

WIRE CONNECTIONS IN CONDUIT REC./DEC. CAB. TO AUX HOIST

WIRE CODE	DESTINATION DEVICE	TERM	DEVICE	TERM	WIRE SIZE	REV
23AR	TB1	15	TB-AH	23AR	14	
24AR	TB1	16	TB-AH	23AR		

WIRE CONNECTIONS IN CONDUIT REC./DEC. CAB. TO PLC RADIO ANALOG INPUT

WIRE CODE	DESTINATION DEVICE	TERM	DEVICE	TERM	WIRE SIZE	REV
04031	TB10	12	INPUT	AO-	14	
04030	TB10	14	INPUT	AO+		
04021	TB10	13	INPUT	AO-		
04020	TB10	16	INPUT	AO+		
04001	TB10	17	INPUT	AO+		
04000	TB10	18	INPUT	AO+		
04011	TB10	19	INPUT	AO+		
04010	TB10	20	INPUT	AO+		
04013	TB10	20	INPUT	AO+		

LOW VOLTAGE WIRE MUST BE KEPT SEPARATE

WIRE CONNECTIONS IN CONDUIT REC./DEC. CAB. TO MAIN CRIT LOAD

WIRE CODE	DESTINATION DEVICE	TERM	DEVICE	TERM	WIRE SIZE	REV
4R	TB2	7	M-CNT	4R	14	1
27AR	TB2	8	M-CNT	27AR		1

WIRE CONNECTIONS IN CONDUIT REC./DEC. CAB TO AUX CRIT LOAD

WIRE CODE	DESTINATION DEVICE	TERM	DEVICE	TERM	WIRE SIZE	REV
4R	TB2	9	A-CNT	4R	14	1
27AR	TB2	10	A-CNT	27AR		1

* WIRE TO OUTSIDE OF TERMINAL BLOCK

CATTRON INC.
SIZE-BOX INSTALLATION NOTES AND CONDUIT CHART
53005R11.10

REV	DATE	DESCRIPTION	DRN	CHK	APP
1	4/8/00	FOR RECORD	HCB		
0	3/28/00	RELEASE FOR PRODUCTION	HCB	JRW	GFM

REVISIONS

AMERGEN ENERGY COMPANY
GPU NUCLEAR
P.O. NUMBER: 01028825

AMERICAN CRANE & EQUIPMENT CORPORATION

105/10 TON REACTOR BUILDING CRANE
CATTRON RADIO NOTES & CONDUIT/CABLE SCHEDULES

OYSTER CREEK REACTOR BUILDING CRANE - TROLLEY REPLACEMENT

DRAWN BY H. BOWER 6/26/00 N.T.S.
DESIGNED BY J. WEST 6/28/00 1604DB23R1.DWG
CHECKED BY C. WALKE 6/28/00 18408

D-18408-825 REV 1

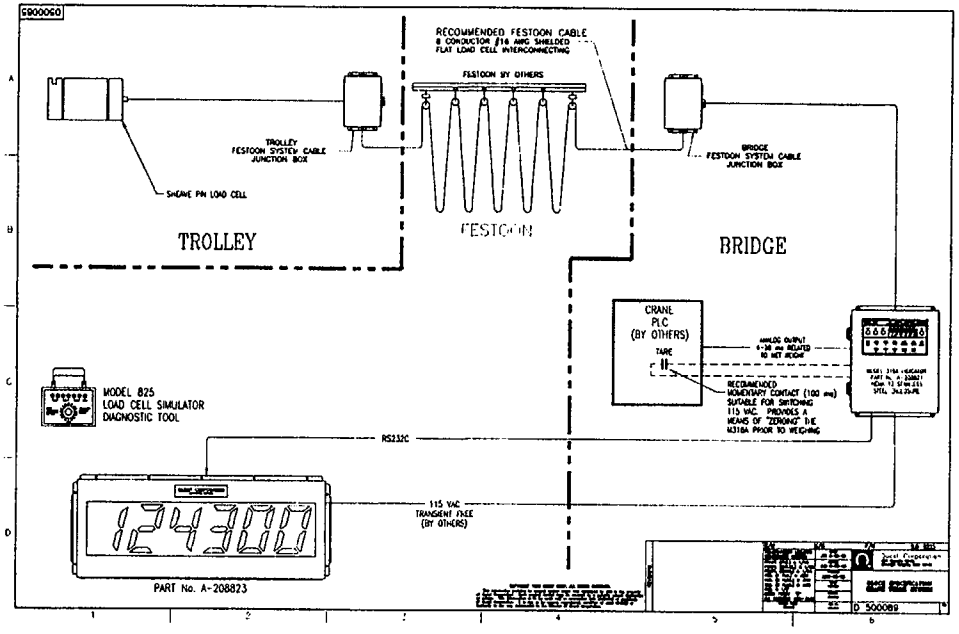

NOTES:
1. SEE DRAWING D-18408-800-2 FOR GEN. NOTES, SYMBOLS & DEVICE TAG INDEX.

REVISIONS					
1	8/24/00	FOR RECORD	KCB	JBJ	GPM
0	8/28/00	RELEASE FOR PRODUCTION	KCB	JBR	GPM

AMERGEN ENERGY COMPANY
GPU NUCLEAR
P.O. NUMBER: 01028825

AMERICAN CRANE & EQUIPMENT CORPORATION
ROSLYN, PA. 19001 U.S.A.
PHONE: 215-379-8000 FAX: 215-379-3199

105/10 TON REACTOR BUILDING CRANE
WEIGH SCALE SYSTEM ONE-LINE DRAWING

OYSTER CREEK REACTOR BUILDING CRANE - TROLLEY REPLACEMENT

DRAWN BY K. BOWEN	DATE 3/13/00	SIZE 11X13
CHECKED BY A. WEST	DATE 6/28/00	DWG NO. 18408-826-1-DWG
APPROVED BY G. VALEK	DATE 6/28/00	DRAWING SCALE 18408

DRAWING NUMBER D-18408-826 REV 1

I-50 OF 53

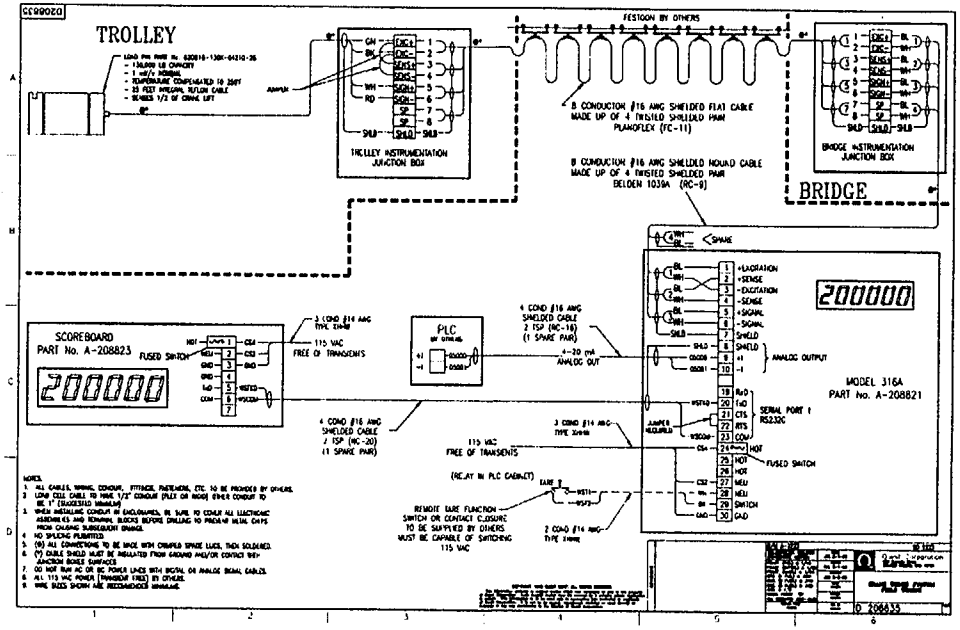

NOTES:
1. SEE DRAWING D-18408-800-2 FOR GEN. NOTES, SYMBOLS & DEVICE TAG INDEX.
2. SEE DRAWING D-18408-851 FOR CABLE SCHEDULE AND CABLE CONDUCTOR IDENTIFICATION.

REV	DATE	DESCRIPTION	DRN	CHK	APP
1	8/24/00	FOR RECORD	KCB	MJ	JMA
0	6/28/00	RELEASE FOR PRODUCTION	KCB	JRH	GFM

REVISIONS

AMERGEN ENERGY COMPANY
GPU NUCLEAR
P.O. NUMBER: 01028825

AMERICAN CRANE & EQUIPMENT CORPORATION
ECKLEYSVILLE, PA. 18016 U.S.A.
PHONE: 610-385-3001 FAX: 610-385-3191

105/10 TON REACTOR BUILDING CRANE
WEIGH SCALE SYSTEM INTERCONNECTION WIRING DIAGRAM

PROJECT: OYSTER CREEK REACTOR BUILDING CRANE- TROLLEY REPLACEMENT

DRAWN BY K. BOWER	DATE 3/13/00	SCALE N.T.S.
CHECKED BY J. WEST	DATE 6/28/00	CAD FILE 18408B2561.DWG
APPROVED BY C. VALEK	DATE 6/28/00	CAD FILE NAME 18408

D-18408-827 | REV 1

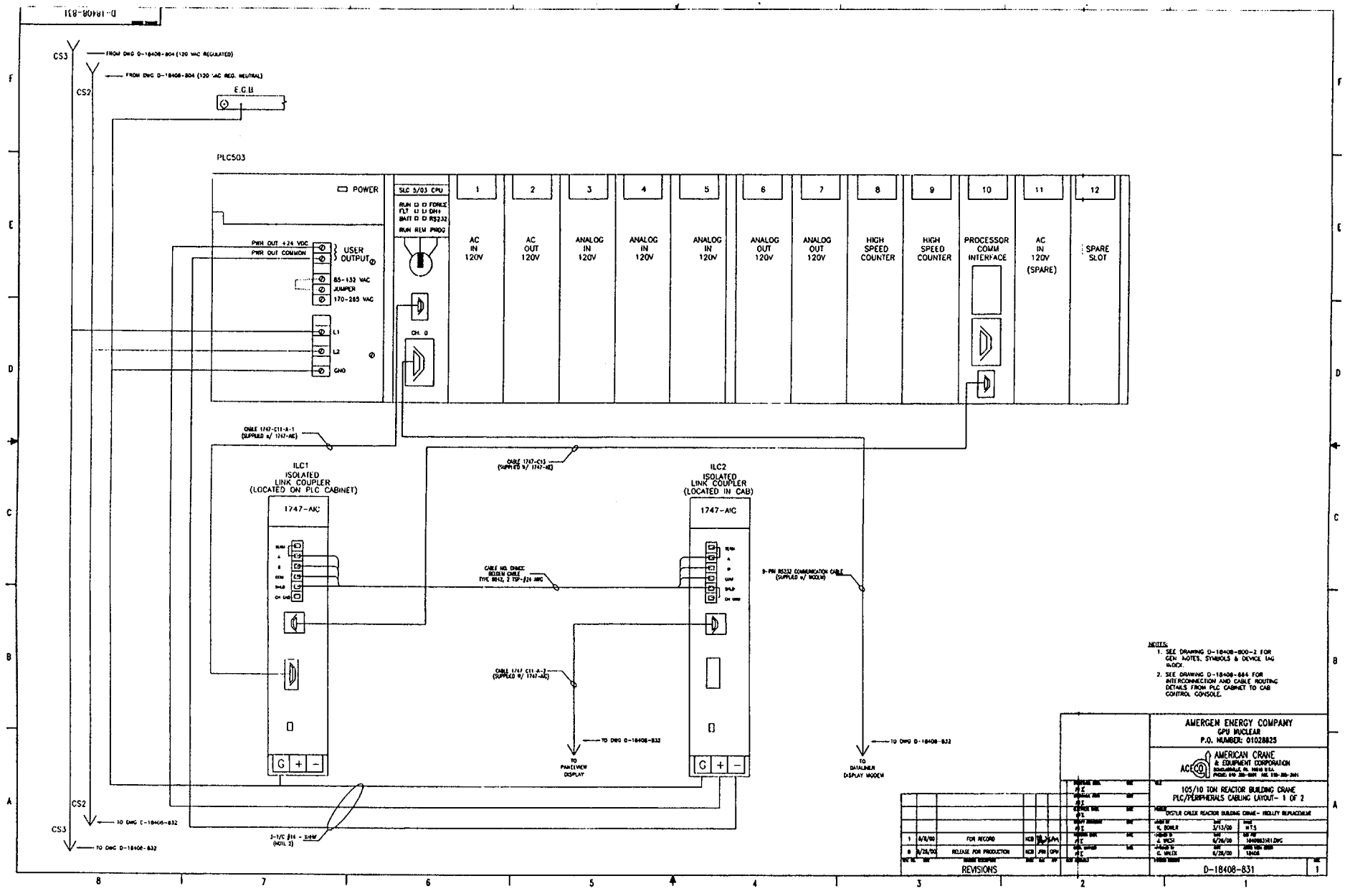
D-18408-831
CS3
FROM DWG D-18408-804 (120 VAC REGULATED)
FROM DWG D-18408-804 (120 VAC REG. NEUTRAL)
CS2
E.C.B
PLC503
POWER
SLC 5/03 CPU
RUN FORCE
FLT DH+
BATT RS232
RUN REM PROG
CH. 0
1
2
3
4
5
6
7
8
9
10
11
12
AC IN 120V
AC OUT 120V
ANALOG IN 120V
ANALOG IN 120V
ANALOG IN 120V
ANALOG OUT 120V
ANALOG OUT 120V
HIGH SPEED COUNTER
HIGH SPEED COUNTER
PROCESSOR COMM INTERFACE
AC IN 120V (SPARE)
SPARE SLOT
PWR OUT +24 VDC
PWR OUT COMMON
USER OUTPUT
85-132 VAC
JUMPER
170-265 VAC
L1
L2
GND
CABLE 1747-C11-A-1 (SUPPLIED W/ 1747-AIC)
CABLE 1747-C13 (SUPPLIED W/ 1747-AIC)
ILC1
ISOLATED LINK COUPLER (LOCATED ON PLC CABINET)
1747-AIC
ILC2
ISOLATED LINK COUPLER (LOCATED IN CAB)
1747-AIC
CABLE NO. CHAGC BELDEN CABLE TYPE 8812, 2 TSP-#24 AWG
9-PIN RS232 COMMUNICATION CABLE (SUPPLIED W/ MODEM)
CABLE 1747-C11-A-2 (SUPPLIED W/ 1747-AIC)
TO DWG D-18408-832
TO PANELVIEW DISPLAY
TO DWG D-18408-832
TO DATALINER DISPLAY MODEM
3-1/C #14 - 3/4"
(NOTE 2)
TO DWG D-18408-832
TO DWG D-18408-832
NOTES:
1. SEE DRAWING D-18408-800-2 FOR GEN NOTES, SYMBOLS & DEVICE TAG INDEX.
2. SEE DRAWING D-18408-884 FOR INTERCONNECTION AND CABLE ROUTING DETAILS FROM PLC CABINET TO CAB CONTROL CONSOLE.
AMERGEN ENERGY COMPANY
GPU NUCLEAR
P.O. NUMBER: 01028825
AMERICAN CRANE & EQUIPMENT CORPORATION
105/10 TON REACTOR BUILDING CRANE
PLC/PERIPHERALS CABLING LAYOUT- 1 OF 2
OSTLR CALEX REACTOR BUILDING CRANE- FACILITY REPLACEMENT
K. DOWLER
3/13/00
N75
J. WACH
6/28/00
1840083H1.DWG
C. WALEX
6/28/00
18408
1 6/8/00 FOR RECORD
0 6/28/00 RELEASE FOR PRODUCTION
REVISIONS
D-18408-831
1

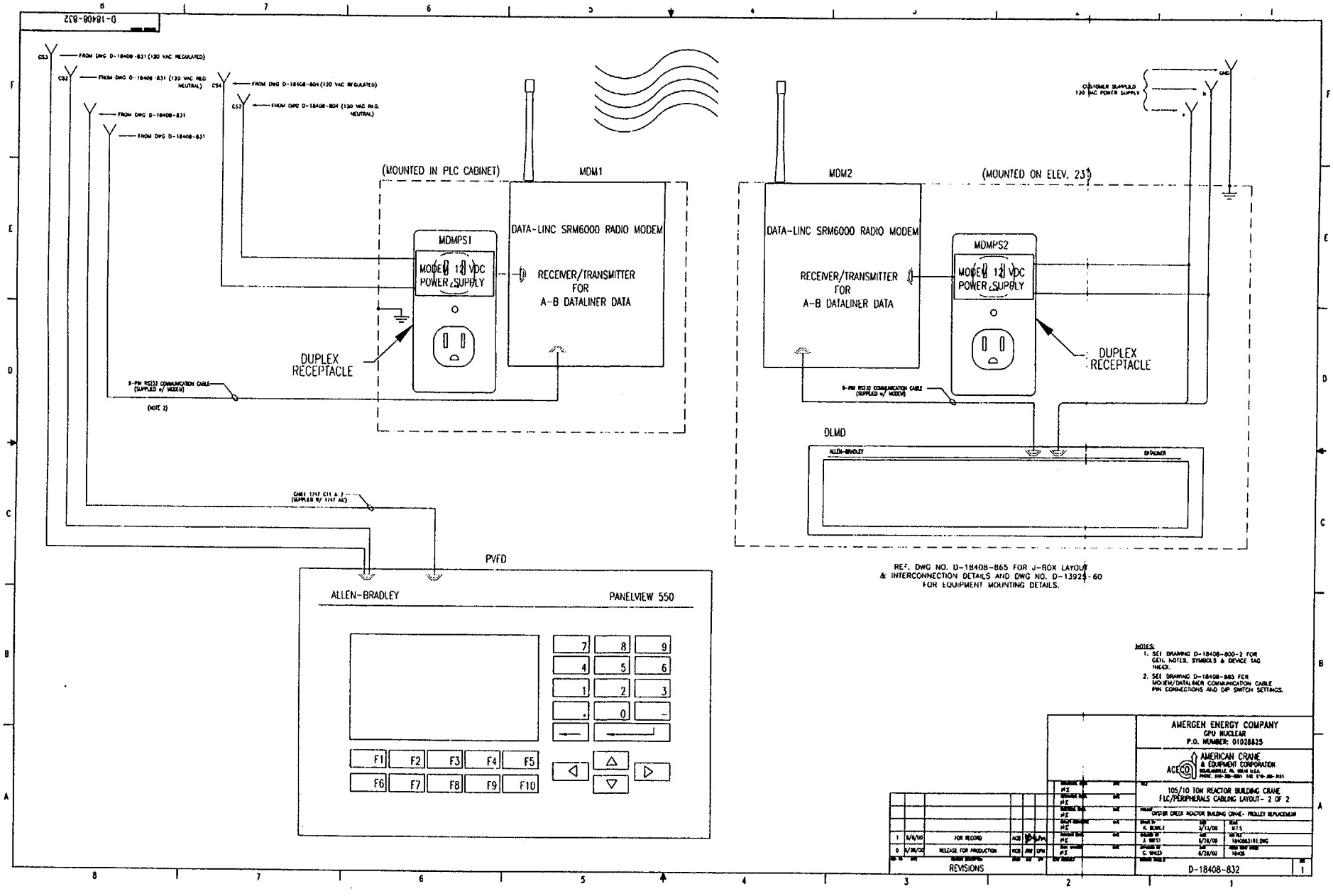
D-18408-832
FROM DWG D-18408-831 (120 VAC REGULATED)
FROM DWG D-18408-831 (120 VAC REG NEUTRAL)
FROM DWG D-18408-804 (120 VAC REGULATED)
FROM DWG D-18408-804 (120 VAC REG. NEUTRAL)
FROM DWG D-18408-831
FROM DWG D-18408-831
CUSTOMER SUPPLIED 120 VAC POWER SUPPLY
GND
(MOUNTED IN PLC CABINET)
MDM1
DATA-LINC SRM6000 RADIO MODEM
RECEIVER/TRANSMITTER FOR A-B DATALINER DATA
MDMPS1
MODEM 12 VDC POWER SUPPLY
DUPLEX RECEPTACLE
9-PIN RS232 COMMUNICATION CABLE (SUPPLIED w/ MODEM)
(NOTE 2)
MDM2
(MOUNTED ON ELEV. 23')
DATA-LINC SRM6000 RADIO MODEM
RECEIVER/TRANSMITTER FOR A-B DATALINER DATA
MDMPS2
MODEM 12 VDC POWER SUPPLY
DUPLEX RECEPTACLE
9-PIN RS232 COMMUNICATION CABLE (SUPPLIED w/ MODEM)
DLMD
ALLEN-BRADLEY
DATALINER
CABLE 1747 C11 A-2 (SUPPLIED W/ 1747 AIC)
PVFD
ALLEN-BRADLEY
PANELVIEW 550
7 8 9
4 5 6
1 2 3
. 0 -
F1 F2 F3 F4 F5
F6 F7 F8 F9 F10
REF. DWG NO. D-18408-865 FOR J-BOX LAYOUT & INTERCONNECTION DETAILS AND DWG NO. D-13924-60 FOR EQUIPMENT MOUNTING DETAILS.
NOTES:
1. SEE DRAWING D-18408-800-2 FOR GEN. NOTES, SYMBOLS & DEVICE TAG INDEX.
2. SEE DRAWING D-18408-865 FOR MODEM/DATALINER COMMUNICATION CABLE PIN CONNECTIONS AND DIP SWITCH SETTINGS.
AMERGEN ENERGY COMPANY
GPU NUCLEAR
P.O. NUMBER: 01028825
AMERICAN CRANE & EQUIPMENT CORPORATION
105/10 TON REACTOR BUILDING CRANE
FLC/PERIPHERALS CABLING LAYOUT- 2 OF 2
OYSTER CREEK REACTOR BUILDING CRANE- TROLLEY REPLACEMENT
1 8/8/00 FOR RECORD
0 6/30/00 RELEASE FOR PRODUCTION
REVISIONS
D-18408-832

Enclosure 2

Oyster Creek Generating Station

Technical Specification Change Request No. 281

Response to Request for Additional Information

Complications Involving Use of the Cask Drop Protection System

Complications Involved in Using the Cask Drop Protection System

In the early 1970s a cask drop protection system (CDPS) was installed in the Oyster Creek spent fuel storage pool to mitigate the effects of a cask drop when the reactor building crane was not single-failure-proof. The CDPS consists of a cylindrical structure, into which large casks are placed when needed to offload radioactive material, including spent fuel assemblies, from the spent fuel storage pool. In order for the CDPS to perform its function a specified load path must be followed, a 6-inch cask height limitation above the CDPS top plate must be met and a base plate of a certain diameter must be attached to the bottom of the cask. The CDPS acts as a hydraulic dashpot to limit the velocity of a falling cask to attenuate impact forces within acceptable levels.

The load path is marked on the floor to provide the crane operator with a visual aid to follow in moving the cask over the CDPS. The load path is not the most direct path from the cask laydown area to the opening of the CDPS. It proceeds west along the south side of the CDPS opening and then turns north to the center of the CDPS. To help ensure that the specified load path is followed, mechanical stops are installed on the crane bridge rails to limit travel in the north and south directions. Stops are installed on the crane trolley rails to limit travel in the west direction. A manual gauge is used and redundant limit switches installed on the crane control cask lift height.

The use of the CDPS complicates cask-handling activities resulting in increased dose, additional hang time during cask moves and the potential for additional lifts to assure limit switches are properly adjusted. The discussion below is based on experience using the cask drop protection system (CDPS) with the reactor building crane prior to the single-failure-proof upgrade with the exception of the dose projection. Since Oyster Creek has not yet transferred spent fuel to dry storage occupational dose is estimated. The upgrade included a complete trolley replacement that did not include redundant limit switches associated with the 6-inch height limit above the CDPS top plate. Limit switches were not installed in anticipation of the deletion of the requirement for the CDPS due to the upgrade of the crane to single-failure-proof combined with the continuation of compliance with NUREG-0612 Phase 1 handling considerations.

The CDPS structure will not be removed from the spent fuel pool with the elimination of its functional requirement. The structure provides a convenient cask lay down area in the fuel pool, which has no other lay down area due to the installation of fuel storage racks. The structure will also provide an isolation boundary between the cask and the rest of the fuel pool.

1. Using the CDPS adds approximately 40 man-hours to spent fuel transfer cask handling activities with an added dose of about 439 mrem per cask evolution. The additional dose is

primarily related to use of the cask base plate and includes installation, removal and decontamination. Additional dose is also received by personnel performing limit switch adjustments, rail stop installation and removal, manually gauging lift height and close observation of cask movement along the indirect load path mentioned previously.

2. Mechanical rail stops are utilized to limit crane travel. This involves installing and removing rail stops manually and possibly relocating the stops during a cask evolution. Mechanics must access the bridge or trolley rails to perform this activity. The stops weigh about 50 pounds and are cumbersome to handle. Installation and removal involves access to the bridge and trolley rails at high elevations increasing risk to personnel safety.

3. Use of the CDPS involves a lift height restriction that needs to be monitored and controlled. The control method used rotary limit switches and a manual gauge. The manual (go, no-go) gauge is employed to ensure that the cask is no higher than 6 inches above the CDPS top plate as it transitions from the operating floor to the CDPS. The limit switches measured crane drum rotation. Since the switches were functional over the entire 100-foot movement of the crane hook, it was difficult to maintain the fraction of an inch accuracy required by the CDPS limit. Adjustments to the reactor building crane limit switches to meet the 6-inch height limitation above the top plate of the CDPS caused interruptions during cask moves. Adjustments required an electrician to be situated on the crane and usually required several attempts to ensure the setpoint met the requirement while the cask was on the hook. Each adjustment required a lift and set-down of the cask. As mentioned above, limit switches associated with the CDPS lift height restriction were not installed on the upgraded crane.

4. The use of the CDPS requires the installation of a tight tolerance base plate to the bottom of the cask. The base plate provides the needed diametrical clearance in the CDPS to ensure the effectiveness of the hydraulic dashpot feature. The installation and removal of the base plate for the NUHOMS® transfer cask each take about an hour to accomplish. The use of the CDPS increases cask hang time between 2 to 3 hours due to base plate installation and removal, the indirect load path over the CDPS and potential interruptions for limit switch or mechanical stop adjustments.

In summary, the use of the CDPS per cask transfer: 1) requires an additional 40 man-hours of effort, 2) results in additional radiation dose to plant personnel of about 439 mrem, 3) increases the duration of cask lifts into and out of the spent fuel storage pool by up to 3 hours, and 4) increases risk to personnel safety. The ability to follow a direct path into and out of the CDPS structure, without the functional requirement for the CDPS, afforded by use of the single-failure-proof crane and handling system reduces the complexity and duration of the cask handling evolution and occupational dose. These aspects offset to some degree the protection afforded by the use of the CDPS to mitigate cask drops. Eliminating the complications caused by use of the

CDPS together with the improved reliability of the crane and associated handling system (compliance with NUREG-0612, Section 5.1.6 and Appendix C) and the improvements in heavy load handling provided by compliance with the Phase 1 criteria of NUREG-0612 results in a substantial improvement in the safe handling of casks into and out of the spent fuel storage pool.

Enclosure 3

Oyster Creek Generating Station

Technical Specification Change Request No. 281

Response to Request for Additional Information

Reactor Building Crane

Failure Modes and Effects Analysis

SEPTEMBER 2000

AMERICAN CRANE & EQUIPMENT CORPORATION
531 Old Swede Road, Douglassville, PA 19518
Phone 610-385-6061 Fax 610-385-3191

ICORR-18408-029 REV. ~~0~~ ~~1~~ 3
GPM
3/26/01

FAILURE MODES AND EFFECTS ANALYSIS (FMEA) FOR THE REACTOR BUILDING CRANE

GPUN/AMERGEN OYSTER CREEK NUCLEAR GENERATING STATION

PURCHASE NO.: 01028825

AMERICAN CRANE WORK ORDER NO.: 18408

WHITING/ACECO CRANE: 105/10 TON CRANE NO. CN-9292

EQUIPMENT NO.: M-882-001

ORIGINATOR: John Wyckoff DATE ORIGINATED: 3-26-01

CHECKED BY: Jose N. Rodriguez DATE CHECKED: 3-26-01

APPROVED BY: [signature] DATE APPROVED: 3-26-01

SEPTEMBER 2000

CHANGE NOTICE SHEET

Cover Page: Revised and Retyped cover page

Section 3: Added definition covering "passive items"

Section 4: Deleted ground rule defining earthquakes as an event and its relationship to crane system failure criticality. Added ground rules defining events such as off site power loss and loss of one or more power phases as they relate to crane system failure criticality.

Section 5: Removed wire rope from the passive items list, changed "All Crane System Drive Shafts" to "All Crane System Drive Shafts Except for Hoist Shafts"

Section 6: Changed all headers from "Failure Effect on Vehicle Systems" to "Failure Effect on Systems", also changed FMEA column (column 6) from "Failure Effect on System and/or Personnel Safety" to "Failure Effect on System Operation or Personnel Safety"

Section 7: Changed all headers from "Failure Effect on Vehicle Systems" to "Failure Effect on Systems", also changed FMEA column (column 6) from "Failure Effect on System and/or Personnel Safety" to "Failure Effect on System Operation or Personnel Safety, added LOLS Limit Switch, Contactors R24, R24A, R24B

TABLE OF CONTENTS

Sec/Par	Title	Page
1	Analysis Objective/Results.....	4
2	References/Documentation List.....	4
3	Definitions.....	9
4	Assumptions/Ground Rules.....	9
5	Passive Component List.....	12
6	Mechanical FMEA Analysis Worksheets.....	13
7	Electrical FMEA Analysis Worksheets.....	21

1.0 Analysis Objective/Results

The primary goal of this analysis is to identify any active component Single Failure Points (SFPs) within the 105/10-Ton Bridge Crane. All active components and their failure modes were analyzed to detail the effect of their failure on load control and/or crane system control. No Single Failure Points were identified within the 105/10-Ton Bridge Crane manufactured for The AMERGEN Energy Company.

2.0 References/Documentation List

DRAWING NUMBER	REV LEVEL	DRAWING TITLE
D-18408-301	05/15/00	TROLLEY FRAME ASSEMBLY
D-18408-302	05/15/00	TROLLEY FRAME ASSEMBLY, SECTION A-A
D-18408-303	05/15/00	TROLLEY FRAME ASSEMBLY, SECTION B-B
D-18408-304	05/15/00	TROLLEY FRAME ASSEMBLY, SECTION VIEWS
D-18408-305	05/10/00	TROLLEY END TRUCK ASSEMBLY, NORTH, SHEET 1
D-18408-306	05/10/00	TROLLEY END TRUCK ASSEMBLY, NORTH, SHEET 2
D-18408-307	05/10/00	TROLLEY END TRUCK ASSEMBLY, NORTH, SHEET 3
D-18408-308	05/20/00	NORTH END TRUCK WELD MAP (2 SHEETS)
D-18408-310	05/10/00	TROLLEY END TRUCK ASSEMBLY, SOUTH, SHEET 1
D-18408-311	05/10/00	TROLLEY END TRUCK ASSEMBLY, SOUTH, SHEET 2
D-18408-312	05/10/00	TROLLEY END TRUCK ASSEMBLY, SOUTH, SHEET 3
D-18408-313	05/20/00	SOUTH END TRUCK WELD MAP (2 SHEETS)
D-18408-314	05/05/00	LOAD GIRT/UPPER BLOCK ASSEMBLY
D-18408-315	05/15/00	TROLLEY BUMPER ARRANGEMENT
D-18408-316	05/05/00	MAIN LOAD GIRT ASSEMBLY
D-18408-317	05/05/00	MAIL LOAD GIRT WELD MAP
D-18408-318	05/05/00	AUXILIARY LOAD GIRT ASSEMBLY
D-18408-319	05/15/00	AUXILIARY HOIST CALIPER BASE
D-18408-320	06/05/00	MAIN HOIST MACHINERY ARRANGEMENT
D-18408-325	05/15/00	MAIN HOIST GEARBOX COUPLING
D-18408-330	05/05/00	END TRUCK DETAILS
D-18408-331	05/05/00	END TRUCK DETAILS
D-18408-332	05/05/00	END TRUCK DETAILS
D-18408-333	05/05/00	END TRUCK DETAILS
D-18408-334	05/05/00	END TRUCK DETAILS
D-18408-335	05/05/00	END TRUCK DETAILS
D-18408-336	05/11/00	TROLLEY SWEEP PLATE
D-18408-340	04/14/00	MAIN HOIST DRUM ASSEMBLY

2.0 References/Documentation List (Cont)

DRAWING NUMBER	REV LEVEL	DRAWING TITLE
D-18408-341	4/14/00	MAIN HOIST DRUM ASSEMBLY WELD MAP
D-18408-345	05/15/00	MAIN HOIST DRUM BEARING MOUNT
D-18408-346	05/15/00	MAIN HOIST DRUM BEARING RETAINER
D-18408-347	05/15/00	MAIN HOIST MOTOR MOUNTING PLATE
D-18408-350	05/15/00	TROLLEY DRIVE ARRANGEMENT
D-18408-360	05/15/00	MAIN HOIST UPPER BLOCK ARRANGEMENT
D-18408-361	05/15/00	MAIN HOIST EQUALIZER DETAILS
D-18408-364	05/15/00	MAIN HOIST UPPER BLOCK DETAILS
D-18408-365	03/06/00	UPPER BLOCK/EQUALIZER SHEAVE DETAILS
D-18408-366	05/15/00	UPPER BLOCK DETAILS
D-18408-370	06/08/00	UPPER BLOCK ASSEMBLY
D-18408-371	05/05/00	UPPER BLOCK DETAILS
D-18408-372	05/05/00	UPPER BLOCK DETAILS
D-18408-373	05/05/00	UPPER BLOCK GUSSET DETAILS
D-18408-374	05/30/00	UPPER BLOCK WELD MAP
D-18408-380	06/08/00	ANGLED SHEAVE ASSEMBLY, SOUTH
D-18408-381	06/08/00	ANGLED SHEAVE ASSEMBLY, NORTH
D-18408-383	05/05/00	ANGLED SHEAVE DETAILS
D-18408-384	06/08/00	ANGLED SHEAVE PIN AND SPACER DETAILS
D-18408-395	05/15/00	AIR TANK MOUNTING ARRANGEMENT
D-18408-505	05/15/00	TROLLEY WHEEL ASSEMBLIES
D-18408-506	05/15/00	TROLLEY AXLES, SPACERS & BEARING HOUSING DETAILS
D-18408-508	03/08/00	TROLLEY WHEEL DETAILS
D-18408-620	06/05/00	AUXILIARY HOIST MACHINERY ARRANGEMENT
D-18408-625	05/15/00	AUXILIARY HOIST GEARBOX COUPLING
D-18408-640	04/14/00	AUXILIARY HOIST DRUM ASSEMBLY
D-18408-641	04/14/00	AUXILIARY HOIST DRUM ASSEMBLY WELD MAP
D-18408-645	05/15/00	AUXILIARY HOIST DRUM BEARING MOUNT
D-18408-646	05/15/00	AUXILIARY HOIST DRUM BEARING RETAINER
D-18408-647	05/15/00	AUXILIARY HOIST MOTOR MOUNTING PLATE
D-18408-660	06/05/00	AUXILIARY HOIST EQUALIZER ARRANGEMENT
D-18408-661	06/05/00	AUXILIARY HOIST EQUALIZER DETAILS
D-18408-750	05/11/00	MAIN HOIST LOWER BLOCK ASSEMBLY
D-18408-751	04/24/00	MAIN HOIST LOWER BLOCK CROSSHEAD DETAIL
D-18408-752	05/11/00	MAIN HOIST LOWER BLOCK DETAILS
D-18408-753	05/11/00	MAIN HOIST LOWER BLOCK DETAILS

2.0 References/Documentation List (Cont)

DRAWING NUMBER	REV LEVEL	DRAWING TITLE
D-18408-755	04/24/00	SISTER HOOK WITH EYE DETAILS
D-18408-759	05/11/00	LOWER BLOCK SHEAVE ASSEMBLIES
D-18408-760	03/03/00	LOWER BLOCK SHEAVE DETAILS
D-18408-775	05/11/00	AUXILIARY HOIST LOWER BLOCK ASSEMBLY
D-18408-776	05/11/00	AUXILIARY HOIST LOWER BLOCK WELDMENT
D-18408-777	05/11/00	AUXILIARY HOIST LOWER BLOCK SHEAVE PLATES
D-18408-778	05/11/00	AUXILIARY HOIST LOWER BLOCK HOUSING PIPE
D-18408-779	05/11/00	AUXILIARY HOIST LOWER BLOCK DETAILS
D-18408-780	04/24/00	AUXILIARY HOIST HOOK/HOOK NUT DETAILS
D-18408-800-1	08/08/00	ELECTRICAL DRAWINGS – DRAWING INDEX
D-18408-800-2	09/14/00	ELECTRICAL DRAWINGS – GENERAL NOTES, SYMBOLS, AND DEVICE TAG INDEX
D-18408-801	09/20/00	ELECTRICAL DRAWINGS – ONE-LINE DIAGRAM
D-18408-804	09/20/00	ELECTRICAL SCHEMATIC DRAWING – MAIN LINE POWER & CONTROL DISTRIBUTION SYSTEM WIRING
D-18408-805	08/08/00	ELECTRICAL SCHEMATIC DRAWING – CRANE UTILITIES POWER/CONTROL SYSTEM WIRING
D-18408-806	09/14/00	ELECTRICAL SCHEMATIC DRAWING – MAIN HOIST CONTROL SYSTEM WIRING
D-18408-807	08/08/00	ELECTRICAL SCHEMATIC DRAWING – MAIN HOIST CONTROL SYSTEM WIRING
D-18408-808	09/14/00	ELECTRICAL SCHEMATIC DRAWING – AUXILIARY HOIST CONTROL SYSTEM WIRING
D-18408-809	09/14/00	ELECTRICAL SCHEMATIC DRAWING – AUXILIARY HOIST CONTROL SYSTEM WIRING
D-18408-810	09/14/00	ELECTRICAL SCHEMATIC DRAWING – TROLLEY & BRIDGE CONTROL SYSTEM WIRING
D-18408-811	08/08/00	ELECTRICAL SCHEMATIC DRAWING – MAIN HOIST POWER/FLUX VECTOR DRIVE SYSTEM WIRING
D-18408-812	09/20/00	ELECTRICAL SCHEMATIC DRAWING – AUXILIARY HOIST POWER/FLUX VECTOR DRIVE SYSTEM WIRING
D-18408-813	08/08/00	ELECTRICAL SCHEMATIC DRAWING – TROLLEY POWER/ADJUSTABLE FREQUENCY DRIVE SYSTEM WIRING
D-18408-814	08/08/00	ELECTRICAL SCHEMATIC DRAWING – BRIDGE POWER/ADJUSTABLE FREQUENCY DRIVE SYSTEM
D-18408-815	08/08/00	ELECTRICAL SCHEMATIC DRAWING – AIR CONDITIONING UNIT SYSTEM WIRING

2.0 References/Documentation List (Cont)

DRAWING NUMBER	REV LEVEL	DRAWING TITLE
D-18408-816	08/08/00	ELECTRICAL SCHEMATIC DRAWING – PLC I/O SYSTEM WIRING DIAGRAM – 120 VAC INPUTS
D-18408-817	08/08/00	ELECTRICAL SCHEMATIC DRAWING – PLC I/O SYSTEM WIRING DIAGRAM – 120 VAC OUTPUTS
D-18408-818	08/08/00	ELECTRICAL SCHEMATIC DRAWING – PLC I/O SYSTEM WIRING DIAGRAM – ANALOG INPUTS
D-18408-819	08/08/00	ELECTRICAL SCHEMATIC DRAWING – PLC I/O SYSTEM WIRING DIAGRAM – ANALOG INPUTS
D-18408-820	08/08/00	ELECTRICAL SCHEMATIC DRAWING – PLC I/O SYSTEM WIRING DIAGRAM – ANALOG OUTPUTS
D-18408-821	08/08/00	ELECTRICAL SCHEMATIC DRAWING – PLC I/O SYSTEM WIRING DIAGRAM – HIGH SPEED COUNTER MODULES
D-18408-822	08/08/00	ELECTRICAL SCHEMATIC DRAWING – PLC I/O SYSTEM WIRING DIAGRAM – 120 VAC INPUTS
D-18408-823	08/08/00	CATTRON RADIO INTERCONNECTION DRAWINGS
D-18408-824	08/08/00	CATTRON RADIO INTERCONNECTION DRAWINGS
D-18408-825	08/08/00	CATTRON RADIO NOTES & CONDUIT/CABLE SCHEDULES
D-18408-826	9/26/00	WEIGH SCALE SYSTEM ONE-LINE DRAWING
D-18408-827	9/26/00	WEIGH SCALE SYSTEM INTERCONNECTION WIRING DIAGRAM
D-18408-828	8/8/00	WEIGH SCALE SYSTEM MODEL 316A DIGITAL INDICATOR
D-18408-829	8/8/00	WEIGH SCALE SYSTEM SCOREBOARD PHYSICAL LAYOUT
D-18408-830	9/26/00	WEIGH SCALE SYSTEM 130K LB LOAD PIN
D-18408-831	8/8/00	PLC/PERIPHERALS CABLING LAYOUT–1 OF 2
D-18408-832	8/8/00	PLC/PERIPHERALS CABLING LAYOUT-2 OF 2
D-18408-840	08/08/00	ELECTRICAL DRAWINGS – BRIDGE CONDUIT ARRANGEMENT DIAGRAM
D-18408-850	06/09/00	ELECTRICAL DRAWINGS – FESTOON CABLE ARRANGEMENT & CABLE SCHEDULE
D-18408-851	08/08/00	ELECTRICAL DRAWINGS – CRANE PWR/CTRL/INSTR CABLE SCHEDULE
D-18408-852	08/08/00	ELECTRICAL DRAWINGS – CRANE POWER/CONTROL CONDUIT SCHEDULE

2.0 References/Documentation List (Cont)

DRAWING NUMBER	REV LEVEL	DRAWING TITLE
D-18408-853	08/08/00	ELECTRICAL DRAWINGS - CRANE INSTRUMENTATION CONDUIT SCHEDULE
D-18408-860	09/14/00	ELECTRICAL DRAWINGS – MAIN HOIST/MAINLINE CONTROL CABINET – PHYS. LAYOUT & INTERCONNECTIONS
D-18408-861	09/14/00	ELECTRICAL DRAWINGS – AUX. HOIST. TROLLEY & BRIDGE CABINET – PHYS. LAYOUT & INTERCONNECTIONS
D-18408-862	09/14/00	ELECTRICAL DRAWINGS – PLC & MISC. CONTROLS CABINET – PHYS. LAYOUT & INTERCONNECTIONS
D-18408-863	08/08/00	ELECTRICAL DRAWINGS – BRIDGE MOUNTED JUNCTION BOXES – PHYS. LAYOUT & INTERCONNECTIONS
D-18408-864	08/08/00	ELECTRICAL DRAWINGS – CRANE CAB & CONTROL CONSOLE – PHYS. LAYOUT & INTERCONNECTIONS
D-18408-865	08/08/00	DATALINER MESSAGE DISPLAY-LAYOUT & INTERCONNECTIONS
A-18408-869	06/09/00	ELECTRICAL DRAWINGS – BILL OF MATERIAL
D-18408-910	05/19/00	MAIN HOIST ROTARY/OVERSPEED LIMIT SWITCH ARRANGEMENT
D-18408-911	05/19/00	MAIN HOIST ROTARY/OVERSPEED LIMIT SWITCH DETAILS
D-18408-912	05/19/00	SPROCKET GUARD
D-18408-915	05/19/00	AUXILIARY HOIST ROTARY/OVERSPEED LIMIT SWITCH ARRANGEMENT
D-18408-916	05/19/00	AUXILIARY HOIST ROTARY/OVERSPEED LIMIT SWITCH DETAINS
D-18408-920	06/08/00	AUXILIARY DRUM MIS-SPOOLING MONITOR ARRANGEMENT
D-18408-921	06/08/00	AUXILIARY DRUM MIS-SPOOLING MONITOR DETAILS
D-18408-930	06/08/00	MAIN & AUXILIARY HOIST PADDLE LIMIT SWITCH ARRANGEMENT
D-18408-935		TROLLEY FESTOON JUNCTION BOX ARRANGEMENT
D-18408-980	05/22/00	STATUS LIGHTING ARRANGEMENT
D-18408-981	05/22/00	STATUS LIGHTING DETAILS

3.0 Definitions

The following is a list of terms and their definitions that have been utilized, and are peculiar to this analysis:

Single Failure Point = For this analysis a single failure point is defined as the failure of any active component whose failure will cause loss of load control causing loss of or damage to load and/or death/injury to personnel.

Passive Item = Passive items are those items for which no corrective engineering solution exists such as the crane hook or bridge structure.

Failure Mode and Effects Analysis Criticality Categories

CRIT CAT.	FAILURE RESULTS
1	A component whose failure will cause loss of load control resulting in loss of load and/or loss of life.
2	A component whose failure will cause loss of load control resulting in damage to load and/or injury to personnel.
3	A component whose failure will result in a delay in operations (down time) for crane system repair

4.0 Assumptions/Ground rules

The following ground rules/assumptions were utilized during the performance of this analysis:

Assumption: All structural components of the lifting systems are considered to be passive and will not be analyzed within the FMEA.

Rationale: All structural components of the lifting systems meet or exceed strength requirements detailed within CMAA 70.

4.0 Assumptions/Ground rules (Cont)

Assumption: For this analysis all Variable Frequency Drive (VFD), Programmable Logic Controller (PLC) and Radio Remote Control analysis was conducted using the "Black Box" method, which analyzes the units for their worst case failure modes and the effects of those failures upon the system and it performance.

Rationale: FMEA analysis routinely focuses on "worst case" failure modes whose failure most adversely effect system performance/safety.

Assumption: For this analysis it is assumed the operators are fully trained in the operation of the crane system.

Rational: Correct Operator input is considered critical for safe operation of the crane system.

Assumption: For this analysis it is assumed that the operator is an intricate part of the crane system fully capable of reacting to emergency situations.

Rational: Without the operator to initiate commands to the crane system, no crane functions are possible.

Assumption: For this analysis Variable Frequency Drive and PLC software was not analyzed, it is assumed pre-use testing will verify software functionality.

Rational: Worst case analysis of failed to a higher speed or different direction than commanded was assumed for the PLC and VFD analysis.

Assumption: For this analysis it is assumed the operator will always have a clear view of the load being lifted/moved, so as to allow the operator the opportunity to intercede in an emergency situation.

Rational: This crane is cab/radio controlled, where as the operator is always near the load or has visual on a TV of the load being lifted/moved.

Assumption: For this analysis only single failures and their ramification are considered.

Rational: The probability of multiple component failure is in the range of 1×10^{-7} and not considered creditable.

4.0 Assumptions/Ground rules (Cont)

Assumption: Loss of one or more of the three (3) phase power required to properly operate the crane system is considered as a "delay for system repair".

Rational: The crane system is protected against such an event by a phase monitoring system. Should this monitoring system sense the loss of one or more of the three phase power system all power to the crane system will be terminated at the main line contactor and all system brakes will engage and hold the load at its last position prior to the power failure event.

5.0 Passive Components List

The items listed below are for this analysis considered passive and are not included within the Failure Mode and Effects Analysis (FMEA). Passive items are those for which there is no corrective engineering solution such as the crane hook. The FMEA allows the owner/designer the opportunity to review the risk of accepting any identified critical single failure points and the opportunity to re-design if necessary..

Mechanical Components

Bridge Structure

Trolley Structure

Wire Rope Drum

Hoist Hook

Trolley/Bridge Wheels

All Crane System Drive Shafts Except for Hoist Shafts

Hand Rails

Walk Ways

Sprockets

Electrical Components

All System wiring (component to component)

Equipment Cabinets

Wire Conduit

Electrical Equipment Support

6.0 Mechanical FMEA Analysis Worksheets

This analysis documented all active mechanical components within 105/10-Ton Bridge Crane Hoist, Trolley systems.

FAILURE MODES AND EFFECTS ANALYSIS (FMEA) WORKSHEET

System: 105/10-TON BRIDGE CRANE, OYSTER CREEK

Subsystem: MAIN HOIST MECHANICAL

Drawing No.: DRAWING D-18408-320

PROGRAM

OYSTER CREEK 105/10-TON BRIDGE CRANE

Page 1 of 3 Date: 09/28/2000

PART NO. DRAWING NO.	PART NAME	PART FUNCTION	A. FAILURE MODE B. CAUSE	FAILURE EFFECT ON SYSTEM PERFORMANCE	FAILURE EFFECT ON SYSTEM OPERATION OR PERSONNEL SAFETY	CRIT CAT
319L4705HZV07B-WOA D1744-320	HOIST GEAR REDUCTION UNIT 705:1 REDUCTION	PROVIDES ABILITY TO TRANSMIT AND REDUCE HOIST MOTOR INPUT POWER TO THE WIRE ROPE DRUM	A1. GEAR/PINION FAILURE B1. OVERSTRESS	FAILURE OF ANY PINION AND OR MATING GEAR WITHIN THE REDUCTION BOX WILL CAUSE LOSS OF LOAD CONTROL BY HOIST MOTOR	LOSS OF ABILITY TO CONTROL LOAD WITH HOIST MOTOR, MAIN HOIST OVERSPEED SENSOR WILL SENSE OVERSPEED AND ENGAGE EMERGENCY DRUM DISC BRAKE.	3
			A2. BEARING FAILURE B2 WEAR/LACK OF LUBRICATION	HOIST SYSTEM INOPERATIVE	DELAY FOR SYSTEM REPAIR	3
P/N 1-088-X42-02	HOIST ELECTRO-MECHANICAL DISC TYPE BRAKE, SPRING APPLIED, ELECTRICALLY WITHDRAWN (MOTOR BRAKE)	PROVIDES ABILITY TO STOP AND HOLD FULL RATED LOAD	A1. FAILS TO ENGAGE B1 SPRING FAILURE\ FRICTION MATERIAL WORN	LOSS OF PRIMARY LOAD STOP/HOLDING ABILITY	HOIST OVERSPEED SENSOR WILL SENSE OVERSPEED AND ENGAGE EMERGENCY BRAKE	3
			A2. FAILS TO DISENGAGE B2. BRAKE CONTACTOR FAILURE	HOIST SYSTEM INOPERATIVE	DELAY FOR SYSTEM REPAIR	3
D-18408-325	COUPLING (MOTOR)	PROVIDES FLEXIBLE CONNECTION BETWEEN MAIN HOIST MOTOR AND MAIN HOIST GEAR REDUCER	A1. FAILS STRUCTURALLY B1. OVERSTRESS	FAILURE WILL CAUSE LOSS OF LOAD CONTROL BY HOIST MOTOR.	LOSS OF ABILITY TO CONTROL LOAD WITH HOIST MOTOR,. HOIST OVERSPEED SENSOR WILL SENSE OVERSPEED AND ENGAGE EMERGENCY BRAKE	3
N/A	SHAFT, HOIST MAIN MOTOR TO GEAR REDUCER, FLEXIBLE	PROVIDES MECHANICAL CONNECTION BETWEEN HOIST MOTOR AND HOIST GEAR REDUCER.	A1. FAILS STRUCTURALLY B1. OVERSTRESS	FAILURE WILL CAUSE LOSS OF LOAD CONTROL USING MAIN HOIST MOTOR.	LOSS OF ABILITY TO CONTROL LOAD WITH HOIST MOTOR,. HOIST OVERSPEED SENSOR WILL SENSE OVERSPEED AND ENGAGE EMERGENCY BRAKE	3

FAILURE MODES AND EFFECTS ANALYSIS (FMEA) WORKSHEET

System: 105/10-TON BRIDGE CRANE, OYSTER CREEK

Subsystem: MAIN HOIST MECHANICAL

Drawing No.: DRAWING D-18408-320

PROGRAM

OYSTER CREEK 105/10-TON BRIDGE CRANE

Page 2 of 3 Date: 09/28/2000

PART NO. DRAWING NO.	PART NAME	PART FUNCTION	A. FAILURE MODE B. CAUSE	FAILURE EFFECT ON SYSTEM PERFORMANCE	FAILURE EFFECT ON SYSTEM OPERATION OR PERSONNEL SAFETY	CRIT CAT
P/N 23984CAC/W33	BEARING, SPHERICAL ROLLER	PROVIDE SUPPORT/FRICTION REDUCTION TO THE WIRE ROPE DRUM	A1. FAILS STRUCTURALLY B1. OVERSTRESS/LACK OF LUBRICATION	LOSS OF SUPPORT FOR WIRE ROPE DRUM. NOISY OPERATION. DRUM MISALIENMENT CAUSING HIGH MOTOR AMPS.	DELAY FOR SYSTEM REPAIR	3
JOHNSON INDUSTRIES, 63 INCH DRUM MOUNTED DISC	EMERGENCY BRAKE, DRUM MOUNTED COMPRESSED AIR WITHDRAWN, SPRING ENGAGED	PROVIDES HOIST EMERGENCY BRAKING WITHOUT REGUARD TO HOIST ELECTRO-MECHANICAL BRAKE STATUS	A1. FAILS TO ENGAGE B1. SPRING FAILURE/ WORN FRICTION PADS	LOSS OF EMERGENCY BRAKING ABILITY	HOIST PRIMARY MOTOR MOUNTED BRAKE WILL STOP AND HOLD FULL RATED LOAD	3
			A2. FAILS TO DISENGAGE B2. LOSS OF AIR PRESSURE/ ELECTRICAL SYSTEM FAILURE	HOIST SYSTEM INOPERATIVE	DELAY FOR SYSTEM REPAIR	3
JOHNSON INDUSTRIES	COMPRESSOR, AIR	PROVIDES REQUIRED COMPRESSED AIR PRESSURE USED TO DISENGAGE HOIST EMERGENCY DISC BRAKE.	A1. FAILS TO OPERATE B1. MOTOR FAILURE	LOSS OF AIR PRESSURE, HOIST EMERGENCY BRAKE WILL SET AND HOLD LOAD. LOSS OF ABILITY TO RELEASE BRAKE, HOIST SYSTEM INOPERATIVE	DELAY FOR SYSTEM REPAIR	3
9426K12	COMPRESSED AIR RESERVOIR, 30 GALS.	PROVIDES REQUIRED COMPRESSED AIR USED TO WITHDRAW HOIST EMERGENCY BRAKE.	A1. FAILS TO HOLD PRESSURE B1. SEAL FAILURE	EMERGENCY BRAKE WILL ENGAGE, HOIST SYSTEM INOPERATIVE.	DELAY FOR SYSTEM REPAIR LOAD MAY BE MANUALLY LOWERED	3
MULTIPLE PART NUMBERS	EQUALIZER	PROVIDES ABILITY TO STABILIZE WIRE ROPE STRETCH AND ASSURE LOAD HOLDING CAPABILITY SHOULD A SINGLE WIRE ROPE FAIL	A1. SHEAVE BEARING FAILURE B1. LACK OF LUBRICATION	POSSIBLE DAMAGE TO WIRE ROPE/SHEAVE.	DELAY FOR SYSTEM REPAIR	3

FAILURE MODES AND EFFECTS ANALYSIS (FMEA) WORKSHEET

System: 105/10-TON BRIDGE CRANE, OYSTER CREEK

Subsystem: MAIN HOIST MECHANICAL

Drawing No.: DRAWING D-18408-320

PROGRAM

OYSTER CREEK 105/10-TON BRIDGE CRANE

Page 3 of 3 Date: 09/28/2000

PART NO. DRAWING NO.	PART NAME	PART FUNCTION	A. FAILURE MODE B. CAUSE	FAILURE EFFECT ON SYSTEM PERFORMANCE	FAILURE EFFECT ON SYSTEM OPERATION OR PERSONNEL SAFETY	CRIT CAT
			A2. SHEAVE FAILURE B2 OVERLOAD	EQUALIZER WILL DAMPEN FORCE ON REMAINING ROPE USING CRUSH PAD TO ASSURE REMAINING WIRE ROPE CAN SUSTAIN LOAD HOLDING ABILITY.	DELAY FOR SYSTEM REPAIR	3
NONE	WIRE ROPE (2) 1 ½"	PROVIDES SUPPORT FOR FULL RATED LOAD. CRANE IS EQUIPPED WITH TWO (2) INDEPENDENT WIRE ROPES.	A1 ROPE FAILURE B1 OVERSTRESS/EXCESSIVE WEAR	SECOND WIRE ROPE WILL HOLD LOAD, LOAD WILL DROP 3 INCHES (PER MANUFACTURE) AS THE EQUALIZER STABILIZES THE LOAD ON REMAINING WIRE ROPE.	DELAY FOR SYSTEM REPAIR	3
NONE	CHAIN, ROLLER, SPEED SENSOR	TRANSMITS HOIST MOTION TO THE SPEED SENSOR SYSTEM.	A1 FAILS STRUCTURALLY B1 OVERSTRESS/WEAR	LOSS OF SPEED SENSOR DATA TO THE PLC. PLC WILL SENSE DATA LOSS AND FAULT HOIST SYSTEM. HOIST SYSTEM INOPERATIVE.	DELAY FOR SYSTEM REPAIRS	3

FAILURE MODES AND EFFECTS ANALYSIS (FMEA) WORKSHEET

System: 105/10-TON BRIDGE CRANE, OYSTER CREEK

Subsystem: AUX. HOIST MECHANICAL

Drawing No.: DRAWING D-18408-620

PROGRAM

OYSTER CREEK 105/10-TON BRIDGE CRANE

Page 1 of 3 Date: 09/28/2000

PART NO. DRAWING NO.	PART NAME	PART FUNCTION	A. FAILURE MODE B. CAUSE	FAILURE EFFECT ON SYSTEM PERFORMANCE	FAILURE EFFECT ON SYSTEM OPERATION OR PERSONNEL SAFETY	CRIT CAT
311L3209HZB05B-WOA D1744-620	HOIST GEAR REDUCTION UNIT 203:1 REDUCTION	PROVIDES ABILITY TO TRANSMIT AND REDUCE AUX. HOIST MOTOR INPUT POWER TO THE WIRE ROPE DRUM	A1. GEAR/PINION FAILURE B1. OVERSTRESS	FAILURE OF ANY PINION AND OR MATING GEAR WITHIN THE REDUCTION BOX WILL CAUSE LOSS OF LOAD CONTROL BY AUX. HOIST MOTOR.	LOSS OF ABILITY TO CONTROL LOAD WITH HOIST MOTOR, AUX. HOIST OVERSPEED SENSOR WILL SENSE DRUM OVERSPEED AND ENGAGE EMERGENCY DRUM DISC BRAKE. LOSS OF LOAD AND/OR LOAD DAMAGE WOULD REQUIRE MULTIPLE FAILURES	3
			A2 BEARING FAILURE B2 WEAR/LACK OF LUBRICATION	AUX. HOIST SYSTEM INOPERATIVE	DELAY FOR SYSTEM REPAIR	3
REULAND	HOIST ELECTRO-MECHANICAL DISC TYPE BRAKE, SPRING APPLIED, ELECTRICALLY WITHDRAWN (MOTOR BRAKE)	PROVIDES ABILITY TO STOP AND HOLD FULL RATED LOAD	A1. FAILS TO ENGAGE B1. SPRING FAILURE\ FRICTION MATERIAL WORN	LOSS OF PRIMARY LOAD STOPPING/HOLDING ABILITY.	AUX. HOIST OVERSPEED SENSOR WILL SENSE DRUM OVERSPEED AND ENGAGE EMERGENCY BRAKE. LOSS OF LOAD AND/OR LOAD DAMAGE WOULD REQUIRE MULTIPLE FAILURES.	3
			A2. FAILS TO DISENGAGE B2. BRAKE CONTACTOR FAILURE	AUX. HOIST SYSTEM INOPERATIVE	DELAY FOR SYSTEM REPAIR	3
D-18408-625	COUPLING	PROVIDES FLEXIBLE CONNECTION BETWEEN AUX. HOIST MOTOR AND AUX. HOIST GEAR REDUCER	A1 FAILS STRUCTURALLY B1. OVERSTRESS	FAILURE WILL CAUSE LOSS OF LOAD CONTROL BY AUX. HOIST MOTOR	LOSS OF ABILITY TO CONTROL LOAD WITH HOIST MOTOR, HOIST OVERSPEED SENSOR WILL SENSE OVERSPEED AND ENGAGE EMERGENCY BRAKE. LOSS OF LOAD AND/OR LOAD DAMAGE WOULD REQUIRE MULTIPLE FAILURES	3

FAILURE MODES AND EFFECTS ANALYSIS (FMEA) WORKSHEET

System: 105/10-TON BRIDGE CRANE, OYSTER CREEK

Subsystem: AUX. HOIST MECHANICAL

Drawing No.: DRAWING D-18408-620

PROGRAM

OYSTER CREEK 105/10-TON BRIDGE CRANE

Page 2 of 3 Date: 09/28/2000

PART NO. DRAWING NO.	PART NAME	PART FUNCTION	A. FAILURE MODE B. CAUSE	FAILURE EFFECT ON SYSTEM PERFORMANCE	FAILURE EFFECT ON SYSTEM OPERATION OR PERSONNEL SAFETY	CRIT CAT
N/A	SHAFT, AUX. HOIST MOTOR TO GEAR REDUCER, FLEXIBLE COUPLING	PROVIDES MECHANICAL CONNECTION BETWEEN AUX. HOIST MOTOR AND AUX. HOIST GEAR REDUCER.	A1. FAILS STRUCTURALLY B1. OVERSTRESS	FAILURE WILL CAUSE LOSS OF LOAD CONTROL BY AUX HOIST MOTOR	LOSS OF ABILITY TO CONTROL LOAD WITH AUX HOIST MOTOR. AUX HOIST OVERSPEED SENSOR WILL SENSE DRUM OVERSPEED AND ENGAGE EMERGENCY BRAKE	3
P/N 23984CAC/W33	BEARING, SPHERICAL ROLLER (DRUM)	PROVIDE SUPPORT/FRICTION REDUCTION TO THE WIRE ROPE DRUM	A1. FAILS STRUCTURALLY B1 OVERSTRESS/LACK OF LUBRICATION	LOSS OF SUPPORT FOR WIRE ROPE DRUM NOISY OPERATION.	DELAY FOR SYSTEM REPAIR	3
JOHNSON INDUSTRIES, 51 ½ INCH DRUM MOUNTED DISC 38HHAA	EMERGENCY BRAKE, DRUM MOUNTED. COMPRESSED AIR WITHDRAWN, SPRING ENGAGED	PROVIDES AUX. HOIST EMERGENCY BRAKING WITHOUT REGUARD TO HOIST ELECTRO-MECHANICAL BRAKE STATUS	A1. FAILS TO ENGAGE B1 SPRING FAILURE	LOSS OF EMERGENCY BRAKING ABILITY	AUX HOIST PRIMARY MOTOR MOUNTED BRAKE WILL STOP AND HOLD FULL RATED LOAD REQUIRES MULTIPLE FAILURES PRIOR TO BECOMING CRITICAL.	3
			A2 FAILS TO DISENGAGE B2. LOSS OF AIR PRESSURE/ ELECTRICAL SYSTEM FAILURE	AUX. HOIST SYSTEM INOPERATIVE.	DELAY FOR SYSTEM REPAIR	3
9426K12	COMPRESSED AIR RESERVOIR, 30 GALS.	PROVIDES REQUIRED COMPRESSED AIR USED TO WITHDRAW AUX. HOIST EMERGENCY BRAKE.	A1. FAILS TO HOLD PRESSURE B1. SEAL FAILURE	EMERGENCY BRAKE WILL ENGAGE, AUX. HOIST SYSTEM INOPERATIVE.	DELAY FOR SYSTEM REPAIR LOAD MAY BE MANUALLY LOWERED	3
MULTIPLE PART NUMBERS	EQUALIZER	PROVIDES ABILITY TO STABILIZE WIRE ROPE STRETCH AND ASSURE LOAD HOLDING CAPABILITY SHOULD A SINGLE WIRE ROPE FAIL	A1 SHEAVE BEARING FAILURE B1. LACK OF LUBRICATION	POSSIBLE DAMAGE TO WIRE ROPE/SHEAVE	DELAY FOR SYSTEM REPAIR	3

FAILURE MODES AND EFFECTS ANALYSIS (FMEA) WORKSHEET

System: 105/10-TON BRIDGE CRANE, OYSTER CREEK

Subsystem: AUX. HOIST MECHANICAL

Drawing No.: DRAWING D-18408-620

PROGRAM

OYSTER CREEK 105/10-TON BRIDGE CRANE

Page 3 of 3 Date: 09/26/2000

PART NO. DRAWING NO.	PART NAME	PART FUNCTION	A. FAILURE MODE B. CAUSE	FAILURE EFFECT ON SYSTEM PERFORMANCE	FAILURE EFFECT ON SYSTEM OPERATION OR PERSONNEL SAFETY	CRIT CAT
			A2. SHEAVE FAILURE B2. OVERLOAD	EQUALIZER WILL DAMPEN FORCE ON REMAINING ROPE REMAINING WIRE ROPE CAN SUSTAIN LOAD HOLDING ABILITY	DELAY FOR SYSTEM REPAIR	3
NONE	WIRE ROPE (2) 5/8"	PROVIDES SUPPORT FOR FULL RATED LOAD. AUX HOIST IS EQUIPPED WITH TWO (2) INDEPENDENT WIRE ROPES.	A1. ROPE FAILURE B1. OVERSTRESS/EXCESSIVE WEAR	SECOND WIRE ROPE WILL HOLD LOAD, LOAD WILL DROP 3 INCHES (PER MANUFACTURE) AS THE EQUALIZER STABILIZES THE LOAD ON REMAINING WIRE ROPE	DELAY FOR SYSTEM REPAIR	3

FAILURE MODES AND EFFECTS ANALYSIS (FMEA) WORKSHEET

System: 105/10-TON BRIDGE CRANE, OYSTER CREEK

Subsystem: TROLLEY MECHANICAL

Drawing No.: DRAWING D-18408-350

PROGRAM

OYSTER CREEK 105/10-TON BRIDGE CRANE

Page 1 of 1 Date: 09/28/2000

PART NO.	PART NAME	PART FUNCTION	A. FAILURE MODE B. CAUSE	FAILURE EFFECT ON SYSTEM PERFORMANCE	FAILURE EFFECT ON SYSTEM OPERATION OR PERSONNEL SAFETY	CRIT CAT
P/N FH107R77 DT90L4 BMG2HRTH	GEAR REDUCER, (2 UNITS)	PROVIDES ABILITY TO TRANSMIT AND REDUCE TROLLEY MOTOR INPUT POWER TO TROLLEY DRIVE WHEELS	A1. GEAR/PINION FAILURE B1. OVERSTRESS	LOSS OF DRIVE POWER TO ONE SIDE OF TROLLEY. TROLLEY WILL OPERATE SLOWLY.	DELAY FOR SYSTEM REPAIR	3
			A2. BEARING FAILURE B2. WEAR/LACK OF LUBRICATION	TROLLEY SYSTEM INOPERATIVE	DELAY FOR SYSTEM REPAIR	3
N/A	BRAKE, ELECTRO-MECHANICAL (TROLLEY MOTOR) (2 UNITS)	PROVIDES ABILITY TO STOP AND HOLD TROLLEY WITH FULL RATED LOAD	A1. FAILS TO ENGAGE B1. SPRING FAILURE\ FRICTION MATERIAL WORN	LOSS OF ONE OF TWO BRAKING SYSTEMS. REMAINING TROLLEY BRAKE WILL STOP TROLLEY MOTION. REQUIRES MULTIPLE FAILURES	DELAY FOR SYSTEM REPAIR	3
			A2. FAILS TO DISENGAGE B2. BRAKE CONTACTOR FAILURE	TROLLEY SYSTEM INOPERATIVE	DELAY FOR SYSTEM REPAIR	3
P/N SB-22224-S	BEARING, SPHERE-ROL (2 TOTAL PER WHEEL)	PROVIDES SUPPORT FOR TROLLEY DRIVE WHEELS	A1. FAILS STRUCTURALLY B1. OVERSTRESS/LACK OF LUBRICATION	LOSS OF SUPPORT FOR TROLLEY DRIVE WHEELS. NOISY OPERATION.	DELAY FOR SYSTEM REPAIR	3
NONE	MOTOR, 2 HP, AIR CONDITIONER COMPRESSOR	PROVIDES POWER REQUIRE TO OPERATE AIR CONDITIONING COMPRESSOR.	A1. FAILS TO OPERATE B1. DEFECTIVE WINDINGS	LOSS OF CABINET MOUNTED AIR CONDITIONING.	DELAY FOR SYSTEM REPAIR	3
NONE	MOTOR, ½ HP, EVAPORATOR	PROVIDES POWER REQUIRED TO OPERATE AIR CONDITIONER EVAPORATOR.	A1. FAILS TO OPERATE B1. DEFECTIVE WINDINGS	LOSS OF CABINET MOUNTED AIR CONDITIONING.	DELAY FOR SYSTEM REPAIR	3

7.0 Electrical FMEA Analysis Worksheets

This analysis documented all active electrical components within the 105/10-Ton Hoist, Trolley, Bridge and Control system.

FAILURE MODES AND EFFECTS ANALYSIS (FMEA) WORKSHEET

System: 105/10-TON BRIDGE CRANE, OYSTER CREEK
Subsystem: BRIDGE CRANE SYSTEM ELECTRICAL
Drawing No.: VEN DRAWING D-1408-804/805

PROGRAM
OYSTER CREEK 105/10-TON BRIDGE CRANE

Page 1 of 9 Date: 09/28/2000

DRAWING FIND NO.	PART NAME	PART FUNCTION	A. FAILURE MODE B. CAUSE	FAILURE EFFECT ON SYSTEM PERFORMANCE	FAILURE EFFECT ON SYSTEM OPERATION OR PERSONNEL SAFETY	CRIT CAT
MDS	SWITCH, MAIN DISCONNECT	PROVIDES PATH FOR 480 VOLT FACILITY POWER TO BE SUPPLIED TO THE CRANE SYSTEM.	A1 FAILS OPEN B1 LEVER FAILURE	CRANE SYSTEM INOPERATIVE	DELAY FOR SYSTEM REPAIR	3
			A2 FAILS CLOSED B2 WELDED LEVERS	LOSS OF ABILITY TO TERMINATE CRANE SYSTEM POWER. POWER TO CRANE SYSTEM CAN BE TERMINATED USING MAIN DISCONNECT SWITCH CIRCUIT BREAKER (MDSCB). REQUIRES MULTIPLE FAILURES	DELAY FOR SYSTEM REPAIR	3
MDSCB	CIRCUIT BREAKER, 200AMP	PROVIDES OVER CURRENT PROTECTION TO THE CRANE SYSTEM	A1 FAILS OPEN B1 BROKEN CONTACTS	LOSS OF 60 HERTZ POWER TO CRANE SYSTEM, CRANE SYSTEM INOPERATIVE ALL BRAKES WILL REMAIN SET	DELAY FOR SYSTEM REPAIR	3
			A2 FAILS CLOSED B2 WELDED CONTACTS	LOSS OF OVER CURRENT PROTECTION. CRANE SYSTEMS PROTECTED DOWNSTREAM. REQUIRES MULTIPLE FAILURES	DELAY FOR SYSTEM REPAIR	3
CB1	CIRCUIT BREAKER, 10 AMP	PROVIDES OVER CURRENT PROTECTION TO THE CONTROL TRANSFORMER CT1.	A1 FAILS OPEN B1 BROKEN CONTACTS	LOSS OF 60 HERTZ POWER TO CRANE SYSTEM. CRANE SYSTEMS INOPERATIVE.	DELAY FOR SYSTEM REPAIR	3
			A2 FAILS CLOSED B2 WELDED CONTACTS	LOSS OF OVER CURRENT PROTECTION. CRANE SYSTEMS PROTECTED DOWNSTREAM REQUIRES MULTIPLE FAILURES	DELAY FOR SYSTEM REPAIR	3
CT1	TRANSFORMER, CONTROL	PROVIDES 120 VOLT POWER TO THE CRANE CONTROL SYSTEM	A1 FAILS OPEN B1 DEFECTIVE WINDINGS	CRANE SYSTEM INOPERATIVE	DELAY FOR SYSTEM REPAIR	3

FAILURE MODES AND EFFECTS ANALYSIS (FMEA) WORKSHEET

System: 105/10-TON BRIDGE CRANE, OYSTER CREEK
Subsystem: BRIDGE CRANE SYSTEM ELECTRICAL
Drawing No.: VEN DRAWING D-1408-804/805

PROGRAM
OYSTER CREEK 105/10-TON BRIDGE CRANE

Page 2 of 9 Date: 09/28/2000

DRAWING FIND NO.	PART NAME	PART FUNCTION	A. FAILURE MODE B. CAUSE	FAILURE EFFECT ON SYSTEM PERFORMANCE	FAILURE EFFECT ON SYSTEM OPERATION OR PERSONNEL SAFETY	CRIT CAT
CT1 (Cont)	TRANSFORMER, CONTROL		A2. FAILS SHORTED B2. DEFECTIVE WINDINGS	CONTROL SYSTEM PROTECTED DOWNSTREAM BY ADDITIONAL FUSES. CRANE SYSTEM INOPERATIVE	DELAY FOR SYSTEM REPAIR	3
CB8A	CIRCUIT BREAKER, 4 AMP	PROVIDES OVER CURRENT PROTECTION TO THE CONTROL SYSTEMS.	A1 FAILS OPEN B1. BROKEN CONTACTS	LOSS OF 60 HERTZ POWER TO CRANE SYSTEM. CRANE SYSTEMS INOPERATIVE.	DELAY FOR SYSTEM REPAIR	3
			A2. FAILS CLOSED B2. WELDED CONTACTS	LOSS OF OVER CURRENT PROTECTION. CRANE SYSTEMS PROTECTED DOWNSTREAM. REQUIRES MULTIPLE FAILURES	DELAY FOR SYSTEM REPAIR	3
CRTS	SWITCH, RADIO CONTROL, CAB CONTROL, N.O.	PROVIDES THE ABILITY TO SWITCH BETWEEN RADIO CONTROL OR OPERATOR CAB CONTROL	A1. FAILS OPEN B1 BROKEN CONTACTS	LOSS OF ABILITY TO POWER CAB CONTROLS. RADIO CONTROL SYSTEM WILL FUNCTION.	DELAY FOR SYSTEM REPAIR	3
			A2. FAILS CLOSED B2. WELDED CONTACTS	LOSS OF ABILITY TO POWER RADIO CONTROL SYSTEM. CAB CONTROL SYSTEM WILL FUNCTION.	DELAY FOR SYSTEM REPAIR	3
CCPON	SWITCH, N.O.	PROVIDES ABILITY TO ENERGIZE OPERATOR CAB CONTROLS	A1 FAILS OPEN B1. BROKEN CONTACTS	LOSS OF ABILITY TO ENERGIZE CRANE CAB CONTROLS. RADIO CONTROL SYSTEM WILL FUNCTION	DELAY FOR SYSTEM REPAIR	3
			A2 FAILS CLOSED B2 WELDED CONTACTS	LOSS OF ABILITY TO POWER RADIO CONTROL SYSTEM CAB CONTROL SYSTEM WILL FUNCTION.	DELAY FOR SYSTEM REPAIR	3

FAILURE MODES AND EFFECTS ANALYSIS (FMEA) WORKSHEET

System: 105/10-TON BRIDGE CRANE, OYSTER CREEK
Subsystem: BRIDGE CRANE SYSTEM ELECTRICAL
Drawing No.: VEN DRAWING D-1408-804/805

PROGRAM
OYSTER CREEK 105/10-TON BRIDGE CRANE

Page 3 of 9 Date: 09/28/2000

DRAWING FIND NO.	PART NAME	PART FUNCTION	A. FAILURE MODE B. CAUSE	FAILURE EFFECT ON SYSTEM PERFORMANCE	FAILURE EFFECT ON SYSTEM OPERATION OR PERSONNEL SAFETY	CRIT CAT
CCPOFF	SWITCH, N.C.	PROVIDES ABILITY TO TERMINATE CRANE SYSTEM POWER BY OPENING MAIN LINE CONTACTOR.	A1. FAILS OPEN B1. BROKEN CONTACTS	LOSS OF ABILITY TO ENERGIZE CRANE SYSTEM	DELAY FOR SYSTEM REPAIR	3
		PROVIDES ABILITY TO TERMINATE CRANE SYSTEM POWER BY OPENING MAIN LINE CONTACTOR.	A2. FAILS CLOSED B2 WELDED CONTACTS	LOSS OF ABILITY TO TERMINATE CRANE MAIN LINE POWER. REQUIRES MULTIPLE FAILURES TO BECOME CRITICAL	DELAY FOR SYSTEM REPAIR	3
M	CONTACTOR	PROVIDES ABILITY TO COMPLETE CIRCUIT FROM FACILITY POWER TO CRANE SYSTEM DRIVE COMPONENTS	A1. CONTACTS FAIL OPEN B1. CONTACT LEVER FAILURE	CRANE SYSTEM INOPERATIVE	DELAY FOR SYSTEM REPAIR	3
			A2. CONTACTS FAIL CLOSED B2. CONTACTS WELDED	CRANE SYSTEM DRIVE COMPONENTS WILL REMAIN ENERGIZED, CRANE CAN BE DE-ENERGIZED USING MAIN DISCONNECT SWITCH	DELAY FOR SYSTEM REPAIR	3
			A3. COIL FAILS OPEN B3. DEFECTIVE COIL WINDINGS	CRANE SYSTEM INOPERATIVE	DELAY FOR SYSTEM REPAIR	3
A	LIGHT, INDICATOR	PROVIDES ABILITY TO ENERGIZE INDICATOR LIGHT USED TO INDICATE CAB CONTROL OPERATION	A1 FAILS OPEN B1. BURNED FILAMENT	LOSS OF VISUAL INDICATION CRANE CAB IS POWERED.	DELAY FOR SYSTEM REPAIR	3

FAILURE MODES AND EFFECTS ANALYSIS (FMEA) WORKSHEET

System: 105/10-TON BRIDGE CRANE, OYSTER CREEK

Subsystem: BRIDGE CRANE SYSTEM ELECTRICAL

Drawing No.: VEN DRAWING D-1408-804/805

PROGRAM

OYSTER CREEK 105/10-TON BRIDGE CRANE

 Date: 09/28/2000

DRAWING FIND NO.	PART NAME	PART FUNCTION	A. FAILURE MODE B. CAUSE	FAILURE EFFECT ON SYSTEM PERFORMANCE	FAILURE EFFECT ON SYSTEM OPERATION OR PERSONNEL SAFETY	CRIT CAT
R1	CONTACTOR, 1 CONTACT N.O., 1 CONTACT N.C.	WHEN ENERGIZED, OPENS CONTACTS R1 WHICH TERMINATE POWER TO MAIN LINE CONTACTOR AND RADIO CONTROL SYSTEM.	A1. CONTACTS FAIL OPEN B1. CONTACT LEVER FAILURE	CRANE SYSTEM INOPERATIVE	DELAY FOR SYSTEM REPAIR	3
			A2 CONTACTS FAIL CLOSED B2 CONTACTS WELDED	LOSS OF ABILITY TO TERMINATE POWER TO RADIO CONTROL SYSTEM	DELAY FOR SYSTEM REPAIR	3
R1	CONTACTOR, 1 CONTACT N.O., 1 CONTACT N.C.	WHEN ENERGIZED, OPENS CONTACTS R1 WHICH TERMINATE POWER TO MAIN LINE CONTACTOR AND RADIO CONTROL SYSTEM	A3 COIL FAILS OPEN B3 DEFECTIVE COIL WINDINGS	CRANE SYSTEM INOPERATIVE	DELAY FOR SYSTEM REPAIR	3
R2	CONTACTOR, 3 CONTACTS N.O.	WHEN ENERGIZED, CLOSES CONTACTS PROVIDING ABILITY TO ENERGIZE MAIN HOIST MOTOR FOR CAB CONTROL	A1. CONTACTS FAIL OPEN B1. CONTACT LEVER FAILURE	LOSS OF ABILITY TO ENERGIZE MAIN HOIST MOTOR	DELAY FOR SYSTEM REPAIR	3
			A2 CONTACTS FAIL CLOSED B2 CONTACTS WELDED	MAIN HOIST MOTOR COULD BE ENERGIZED FROM CAB CONTROLS WHILE IN RADIO CONTROL MODE. REQUIRES MULTIPLE FAILURES.	DELAY FOR SYSTEM REPAIR	3
			A3 COIL FAILS OPEN B3 DEFECTIVE COIL WINDINGS	LOSS OF ABILITY TO ENERGIZE MAIN HOIST MOTOR.	DELAY FOR SYSTEM REPAIR	3

10/10/01 16:42:41

FAILURE MODES AND EFFECTS ANALYSIS (FMEA) WORKSHEET

System: 105/10-TON BRIDGE CRANE, OYSTER CREEK
Subsystem: BRIDGE CRANE SYSTEM ELECTRICAL
Drawing No.: VEN DRAWING D-1408-804/805

PROGRAM
OYSTER CREEK 105/10-TON BRIDGE CRANE

Page 5 of 9 Date: 09/28/2000

DRAWING FIND NO.	PART NAME	PART FUNCTION	A. FAILURE MODE B. CAUSE	FAILURE EFFECT ON SYSTEM PERFORMANCE	FAILURE EFFECT ON SYSTEM OPERATION OR PERSONNEL SAFETY	CRIT CAT
R3	CONTACTOR, 3 CONTACTS N.O.	WHEN ENERGIZED, CLOSES CONTACTS PROVIDING ABILITY TO ENERGIZE AUX. HOIST MOTOR FROM CAB CONTROL.	A1. CONTACTS FAIL OPEN B1. CONTACT LEVER FAILURE	LOSS OF ABILITY TO ENERGIZE AUX. HOIST MOTOR.	DELAY FOR SYSTEM REPAIR	3
			A2. CONTACTS FAIL CLOSED B2. CONTACTS WELDED	AUX. HOIST MOTOR COULD BE ENERGIZED FROM CAB CONTROLS WHILE IN RADIO CONTROL MODE. REQUIRES MULTIPLE FAILURES	DELAY FOR SYSTEM REPAIR	3
			A3. COIL FAILS OPEN B3. DEFECTIVE COIL WINDINGS	LOSS OF ABILITY TO ENERGIZE AUX. HOIST MOTOR	DELAY FOR SYSTEM REPAIR	3
R4	CONTACTOR, 3 CONTACTS N.O	WHEN ENERGIZED, CLOSES CONTACTS PROVIDING ABILITY TO ENERGIZE TROLLEY MOTOR FROM CAB CONTROL.	A1. CONTACTS FAIL OPEN B1. CONTACT LEVER FAILURE	LOSS OF ABILITY TO ENERGIZE TROLLEY MOTOR	DELAY FOR SYSTEM REPAIR	3
			A2. CONTACTS FAIL CLOSED B2. CONTACTS WELDED	TROLLEY MOTOR COULD BE ENERGIZED FROM CAB CONTROLS WHILE IN RADIO CONTROL MODE. REQUIRES MULTIPLE FAILURES.	DELAY FOR SYSTEM REPAIR	3
			A3. COIL FAILS OPEN B3. DEFECTIVE COIL WINDINGS	LOSS OF ABILITY TO ENERGIZE TROLLEY MOTOR.	DELAY FOR SYSTEM REPAIR	3

FAILURE MODES AND EFFECTS ANALYSIS (FMEA) WORKSHEET

System: 105/10-TON BRIDGE CRANE, OYSTER CREEK
Subsystem: BRIDGE CRANE SYSTEM ELECTRICAL
Drawing No.: VEN DRAWING D-1408-804/805

PROGRAM
OYSTER CREEK 105/10-TON BRIDGE CRANE

 Date: 09/28/2000

DRAWING FIND NO.	PART NAME	PART FUNCTION	A. FAILURE MODE B. CAUSE	FAILURE EFFECT ON SYSTEM PERFORMANCE	FAILURE EFFECT ON SYSTEM OPERATION OR PERSONNEL SAFETY	CRIT CAT
R5	CONTACTOR, 3 CONTACTS N.O.	WHEN ENERGIZED, CLOSES CONTACTS PROVIDING ABILITY TO ENERGIZE BRIDGE MOTOR FROM CAB CONTROL.	A1 CONTACTS FAIL OPEN B1. CONTACT LEVER FAILURE	LOSS OF ABILITY TO ENERGIZE BRIDGE MOTOR.	DELAY FOR SYSTEM REPAIR	3
			A2. CONTACTS FAIL CLOSED B2. CONTACTS WELDED	BRIDGE MOTOR COULD BE ENERGIZED FROM CAB CONTROLS WHILE IN RADIO CONTROL MODE. REQUIRES MULTIPLE FAILURES	DELAY FOR SYSTEM REPAIR	3
			A3. COIL FAILS OPEN B3. DEFECTIVE COIL WINDINGS	LOSS OF ABILITY TO ENERGIZE BRIDGE MOTOR.	DELAY FOR SYSTEM REPAIR	3
CVT	TRANSFORMER, 480/120 VAC	PROVIDES 120 VOLT POWER TO THE CONTROL SYSTEM	A1 FAILS OPEN B1 DEFECTIVE WINDINGS	CRANE SYSTEM INOPERATIVE	DELAY FOR SYSTEM REPAIR	3
			A2 FAILS SHORTED B2. DEFECTIVE WINDINGS	CONTROL SYSTEM PROTECTED DOWNSTREAM BY ADDITIONAL FUSES. CRANE SYSTEM INOPERATIVE	DELAY FOR SYSTEM REPAIR	3
SVM	VOLTAGE MONITOR	PROVIDES THE ABILITY TO MONITOR INBOUND FACILITY POWER TO THE CRANE SYSTEM	A1. FAILS TO MONITOR B1. INTERNAL PART FAILURE	POSSIBLE DAMAGE TO CRANE SYSTEMS CRANE SYSTEMS PROTECTED BY FUSES/CIRCUIT BREAKERS AND PLC WILL TERMINATE SYSTEM OPERATION. REQUIRES MULTIPLE FAILURES	DELAY FOR SYSTEM REPAIR	3
			A2. FAILS OPEN B2. INTERNAL PART FAILURE	CRANE SYSTEM INOPERATIVE	DELAY FOR SYSTEM REPAIR	3
F1	FUSE	PROVIDES OVER CURRENT PROTECTION TO SYSTEM VOLTAGE MONITOR	A1. FAILS TO OPEN B1 INTERNAL FAILURE	POSSIBLE DAMAGE TO SYSTEM VOLTAGE MONITOR CRANE SYSTEM INOPERATIVE	DELAY FOR SYSTEM REPAIR	3

FAILURE MODES AND EFFECTS ANALYSIS (FMEA) WORKSHEET

System: 105/10-TON BRIDGE CRANE, OYSTER CREEK
Subsystem: BRIDGE CRANE SYSTEM ELECTRICAL
Drawing No.: VEN DRAWING D-1408-804/805

PROGRAM
OYSTER CREEK 105/10-TON BRIDGE CRANE

 Date: 09/28/2000

DRAWING FIND NO.	PART NAME	PART FUNCTION	A. FAILURE MODE B. CAUSE	FAILURE EFFECT ON SYSTEM PERFORMANCE	FAILURE EFFECT ON SYSTEM OPERATION OR PERSONNEL SAFETY	CRIT CAT
F1 (CONT)	FUSE		A2. OPENS PREMATURELY B2. DEFECTIVE MATERIAL	CRANE SYSTEM INOPERATIVE.	DELAY FOR SYSTEM REPAIR	3
CB3	CIRCUIT BREAKER, 20 AMP	PROVIDES OVER CURRENT PROTECTION TO CRANE UTILITIES FROM MAIN LINE FACILITY POWER	A1. FAILS OPEN B1. BROKEN CONTACTS	LOSS OF POWER TO CRANE LIGHTING/UTILITIES.	DELAY FOR SYSTEM REPAIR	3
			A2. FAILS CLOSED B2. WELDED CONTACTS	LOSS OF ABILITY TO TERMINATE POWER TO CRANE LIGHTING/UTILITIES. MAIN DISCONNECT SWITCH MDS WILL TERMINATE POWER.	DELAY FOR SYSTEM REPAIR	3
CB14	CIRCUIT BREAKER, 15 AMP	PROVIDES OVER CURRENT PROTECTION TO CRANE UTILITIES TRANSFORMER FROM MAIN LINE FACILITY POWER	A1. FAILS OPEN B1. BROKEN CONTACTS	LOSS OF POWER TO CRANE LIGHTING/UTILITIES.	DELAY FOR SYSTEM REPAIR	3
CB14 (CONT)	CIRCUIT BREAKER, 15 AMP	PROVIDES OVER CURRENT PROTECTION TO CRANE UTILITIES TRANSFORMER FROM MAIN LINE FACILITY POWER	A2. FAILS CLOSED B2. WELDED CONTACTS	LOSS OF ABILITY TO TERMINATE POWER TO CRANE LIGHTING/UTILITIES CB3 CAN BE USED TO TERMINATE POWER. WILL TERMINATE POWER.	DELAY FOR SYSTEM REPAIR	3
UT1	TRANSFORMER, UTILITY	PROVIDES 120 VOLT POWER TO THE CRANE UTILITY SYSTEM	A1. FAILS OPEN B1. DEFECTIVE WINDINGS	CRANE UTILITY SYSTEMS INOPERATIVE	DELAY FOR SYSTEM REPAIR	3
			A2. FAILS SHORTED B2. DEFECTIVE WINDINGS	UTILITY SYSTEMS PROTECTED DOWNSTREAM BY ADDITIONAL FUSES. CRANE UTILITY SYSTEMS INOPERATIVE	DELAY FOR SYSTEM REPAIR	3

FAILURE MODES AND EFFECTS ANALYSIS (FMEA) WORKSHEET

System: 105/10-TON BRIDGE CRANE, OYSTER CREEK

Subsystem: BRIDGE CRANE SYSTEM ELECTRICAL

Drawing No.: VEN DRAWING D-1408-804/805

PROGRAM

OYSTER CREEK 105/10-TON BRIDGE CRANE

Page 8 of 9 Date: 09/28/2000

DRAWING FIND NO.	PART NAME	PART FUNCTION	A. FAILURE MODE B. CAUSE	FAILURE EFFECT ON SYSTEM PERFORMANCE	FAILURE EFFECT ON SYSTEM OPERATION OR PERSONNEL SAFETY	CRIT CAT
DPCB1, DPCB2	CIRCUIT BREAKER, 15 AMPS	PROVIDES OVER CURRENT PROTECTION TO CRANE WARNING BELL AND BRIDGE SOUTH LIGHTS.	A1. FAILS CLOSED B1. WELDED CONTACTS	POSSIBLE DAMAGE TO CRANE UTILITIES.	DELAY FOR SYSTEM REPAIR	3
			A2. PREMATURE OPEN B2. DEFECTIVE MATERIAL/INTERNAL PART FAILURE	LOSS OF ABILITY TO ENERGIZE CRANE SYSTEM UTILITIES	DELAY FOR SYSTEM REPAIR	3
DPCB3, DPCB4	CIRCUIT BREAKER, 20 AMPS	PROVIDES OVER CURRENT PROTECTION TO CRANE BRIDGE NORTH LIGHTS AND RECEPTACLES.	A1. FAILS CLOSED B1. WELDED CONTACTS	POSSIBLE DAMAGE TO CRANE UTILITIES.	DELAY FOR SYSTEM REPAIR	3
			A2. PREMATURE OPEN B2. DEFECTIVE MATERIAL/INTERNAL PART FAILURE	LOSS OF ABILITY TO ENERGIZE CRANE SYSTEM UTILITIES	DELAY FOR SYSTEM REPAIR	3
DPCB5, DPCB6	CIRCUIT BREAKER, 15 AMPS	PROVIDES OVER CURRENT PROTECTION TO CRANE CAB FAN AND CAB LIGHT.	A1. FAILS CLOSED B1. WELDED CONTACTS	POSSIBLE DAMAGE TO CRANE UTILITIES.	DELAY FOR SYSTEM REPAIR	3
			A2. PREMATURE OPEN B2. DEFECTIVE MATERIAL/INTERNAL PART FAILURE	LOSS OF ABILITY TO ENERGIZE CRANE SYSTEM UTILITIES	DELAY FOR SYSTEM REPAIR	3
NONE	SWITCH, FOOT OPERATED	PROVIDES ABILITY TO ENERGIZE CRANE WARNING BELL.	A1. FAILS OPEN B1. BROKEN CONTACTS	LOSS OF ABILITY TO ENERGIZE CRANE WARNING BELL.	DELAY FOR SYSTEM REPAIR	3
			A2. FAILS CLOSED B2. WELDED CONTACTS	WARNING BELL WILL REMAIN ENERGIZED.	DELAY FOR SYSTEM REPAIR	3

FAILURE MODES AND EFFECTS ANALYSIS (FMEA) WORKSHEET

System: 105/10-TON BRIDGE CRANE, OYSTER CREEK
Subsystem: BRIDGE CRANE SYSTEM ELECTRICAL
Drawing No.: VEN DRAWING D-1408-804/805

PROGRAM
OYSTER CREEK 105/10-TON BRIDGE CRANE

 Date: 09/28/2000

DRAWING FIND NO.	PART NAME	PART FUNCTION	A. FAILURE MODE B. CAUSE	FAILURE EFFECT ON SYSTEM PERFORMANCE	FAILURE EFFECT ON SYSTEM OPERATION OR PERSONNEL SAFETY	CRIT CAT
NONE	BELL, WARNING	PROVIDES AUDIBLE WARNING OF CRANE OPERATION.	A1 FAILS TO OPERATE B1 DEFECTIVE PARTS	LOSS OF AUDIBLE WARNING	DELAY FOR SYSTEM REPAIR	3
NONE	FAN, CAB	PROVIDES OPERATOR COMFORT LEVEL.	A1 FAILS TO OPERATE B1. DEFECTIVE MOTOR WINDINGS	LOSS OF CAB FAN FUNCTION	DELAY FOR SYSTEM REPAIR	3
NONE	LIGHT, CAB	PROVIDES LIGHTING WITHIN CONTROL CAB	A1 FAILS TO LIGHT B1 BURNED FILAMENT	LOSS OF CAB LIGHTING	DELAY FOR SYSTEM REPAIR	3
NONE	LIGHTS, BRIDGE NORTH-SOUTH	PROVIDES OPERATOR WITH LIGHT ON BRIDGE	A1 FAILS TO LIGHT B1 BURNED FILAMENT	LOSS OF BRIDGE LIGHTING	DELAY FOR SYSTEM REPAIR	3
NONE	SWITCH, CAB LIGHT	PROVIDES THE ABILITY TO ENERGIZE CAB LIGHT	A1 FAILS OPEN B1 BROKEN CONTACTS	LOSS OF CAB LIGHTING	DELAY FOR SYSTEM REPAIR	3
			A2 FAILS CLOSED B2. WELDED CONTACTS	LOSS OF ABILITY TO TERMINATE CAB LIGHT POWER	DELAY FOR SYSTEM REPAIR	3
ACM, 184T	COMPRESSOR, AIR	PROVIDES COMPRESSED AIR THAT IS USED TO DIS-ENGAGE CRANE SYSTEM DISC BRAKES.	A1 FAILS TO OPERATE B1 MOTOR FAILURE	LOSS OF COMPRESSED AIR SUPPLY ALL SYSTEM BRAKES WILL ENGAGE AND REMAIN ENGAGED ONCE SUPPLY IS DEPLETED	DELAY FOR SYSTEM REPAIR	3

FAILURE MODES AND EFFECTS ANALYSIS (FMEA) WORKSHEET

System: 105/10-TON BRIDGE CRANE, OYSTER CREEK

Subsystem: HOIST RADIO CONTROL UNIT

Drawing No.: DRAWING D-18408-823/824

PROGRAM

105/10 BRIDGE CRANE
OYSTER CREEK

Page 1 of 1 Date: 09/28/2000

FIND NO.	PART NAME	PART FUNCTION	A. FAILURE MODE B. CAUSE	FAILURE EFFECT ON SYSTEM PERFORMANCE	FAILURE EFFECT ON SYSTEM OPERATION OR PERSONNEL SAFETY	CRIT CAT
MULTIPLE PART NUMBERS	TRANSMITTER, REMOTE CONTROL RADIO	PROVIDES THE ABILITY TO OPERATE CRANE SYSTEM FROM REMOTE LOCATION.	A1. FAILS TO OPERATE B1. INTERNAL PART FAILURE	LOSS OF REMOTE LOCATION OPERATING ABILITY	DELAY FOR SYSTEM REPAIR	3
			A2. FAILS DURING OPERATION B2. INTERNAL PART FAILURE	LOSS OF SIGNAL TO THE CRANE SYSTEM PLC WILL BE INTERPRETED AS A FAULT AND ALL SYSTEM BRAKES WILL BE ENGAGED REQUIRES MULTIPLE FAILURES	DELAY FOR SYSTEM REPAIR	3
			A3 ERRONEOUS SIGNAL SENT B3. INTERNAL PART FAILURE	CRANE WILL OPERATE IN A SPEED OR DIRECTION OTHER THAN COMMANDED. OPERATOR CAN STOP CRANE MOTION BY USING STOP BUTTON WHICH OPENS MAIN LINE CONTACTOR AND TERMINATES CRANE POWER SETTING ALL SYSTEM BRAKES	DELAY FOR SYSTEM REPAIR	3
	POWER SUPPLY, 120 VAC (4 UNITS)	PROVIDES REQUIRED POWER TO OPERATE REMOTE CONTROL RADIO SYSTEM.	A1. FAILS TO OPERATE B1. DEFECTIVE CIRCUIT	LOSS OF ABILITY TO OPERATE CRANE FROM REMOTE LOCATION	DELAY FOR SYSTEM REPAIR	3
			A2 FAILS DURING OPERATION	LOSS OF SIGNAL TO THE CRANE SYSTEM PLC WILL BE INTERPRETED AS A FAULT AND ALL SYSTEM BRAKES WILL BE ENGAGED REQUIRES MULTIPLE FAILURES	DELAY FOR SYSTEM REPAIR	3
NONE	CONTROL LEVER, RADIO CONSOLE	PROVIDES THE ABILITY TO INPUT OPERATOR COMMANDS TO THE TRANSMITTER CIRCUITRY	A1. FAILS TO OPERATE B1 OPEN VARISTOR	LOSS OF EFFECTED SYSTEM FUNCTION	DELAY FOR SYSTEM REPAIR	3

FAILURE MODES AND EFFECTS ANALYSIS (FMEA) WORKSHEET

System: 105/10-TON BRIDGE CRANE, OYSTER CREEK
Subsystem: MAIN HOIST CONTROL CIRCUIT
Drawing No.: DRAWING D-18408-806/807

PROGRAM
OYSTER CREEK 105/10 TON TROLLEY REPLACEMENT

Page 1 of 15 Date: 9/28/2000

PART NO.	PART NAME	PART FUNCTION	A. FAILURE MODE B. CAUSE	FAILURE EFFECT ON SYSTEM PERFORMANCE	FAILURE EFFECT ON SYSTEM OPERATION OR PERSONNEL SAFETY	CRIT CAT
MHRIM	JOYSTICK, HOIST UP	PROVIDES THE OPERATOR THE ABILITY TO SELECT HOIST DIRECTION OF TRAVEL AND VARY HOIST SPEED WITHIN SELECTED SPEED MODE. JOYSTICK IN CENTERED POSITION COMMANDS ALL STOP.	A1. FAILS TO OPERATE B1. DEFECTIVE VARISTOR	LOSS OF ABILITY TO COMMAND MAIN HOIST IN THE UP DIRECTION OF TRAVEL	DELAY FOR SYSTEM REPAIR	3
			A2 FAILS FROZEN B2 CORROSION	HOIST WILL CONTINUE TO MOVE, OPERATOR UNABLE USING JOYSTICK TO COMMAND ALL STOP. HOIST CAN BE STOPPED USING STOP PUSH BUTTON WHICH OPENS MAIL LINE CONTACTOR TERMINATING FACILITY POWER TO CRANE. REQUIRES MULTIPLE FAILURES TO BECOME CRITICAL.	DELAY FOR SYSTEM REPAIR	3
	JOYSTICK, HOIST DOWN	PROVIDES THE ABILITY TO SELECT DIRECTION AND SPEED OF TRAVEL OF MAIN HOIST.	A1. FAILS TO OPERATE B1. DEFECTIVE VARISTOR	LOSS OF ABILITY TO COMMAND MAIN HOIST IN THE DOWN DIRECTION OF TRAVEL.	DELAY FOR SYSTEM REPAIR	3
			A2. FAILS FROZEN B2. CORROSION	HOIST WILL CONTINUE TO MOVE, OPERATOR UNABLE USING JOYSTICK TO COMMAND ALL STOP. HOIST CAN BE STOPPED USING STOP PUSH BUTTON WHICH OPENS MAIL LINE CONTACTOR TERMINATING FACILITY POWER TO CRANE. REQUIRES MULTIPLE FAILURES TO BECOME CRITICAL	DELAY FOR SYSTEM REPAIR	3

FAILURE MODES AND EFFECTS ANALYSIS (FMEA) WORKSHEET

System: 105/10-TON BRIDGE CRANE, OYSTER CREEK
Subsystem: MAIN HOIST CONTROL CIRCUIT
Drawing No.: DRAWING D-18408-806/807

PROGRAM
OYSTER CREEK 105/10 TON TROLLEY REPLACEMENT

Page 2 of 15 Date: 9/28/2000

PART NO.	PART NAME	PART FUNCTION	A. FAILURE MODE B. CAUSE	FAILURE EFFECT ON SYSTEM PERFORMANCE	FAILURE EFFECT ON SYSTEM OPERATION OR PERSONNEL SAFETY	CRIT CAT
KSW2	SWITCH, KEY OPERATED	PROVIDES THE ABILITY TO RE-ENERGIZE HOIST SYSTEM AFTER THE EQUALIZER LIMIT SWITCH OPENS.	A1. FAILS OPEN B1. BROKEN CONTACTS	LOSS OF ABILITY TO RE-ENERGIZE HOIST SYSTEM AFTER EQUALIZER SHUT DOWN	DELAY FOR SYSTEM REPAIR	3
			A2. FAILS CLOSED B2. WELDED CONTACTS	LOSS OF EQUALIZER PROTECTION CIRCUIT. REQUIRES MULTIPLE FAILURES PRIOR TO BECOMING CRITICAL.	DELAY FOR SYSTEM REPAIR	3
KSW1	SWITCH, KEY OPERATED	PROVIDES THE ABILITY TO RE-ENERGIZE HOIST SYSTEM AFTER THE WIRE ROPE MIS-SPOOLING LIMIT SWITCH OPENS.	A1. FAILS OPEN B1. BROKEN CONTACTS	LOSS OF ABILITY TO RE-ENERGIZE HOIST SYSTEM AFTER WIRE ROPE MIS-SPOOLING LIMIT SWITCH SHUT DOWN	DELAY FOR SYSTEM REPAIR	3
			A2. FAILS CLOSED B2. WELDED CONTACTS	LOSS OF WIRE ROPE MIS-SPOOLING PROTECTION CIRCUIT. REQUIRES MULTIPLE FAILURES PRIOR TO BECOMING CRITICAL	DELAY FOR SYSTEM REPAIR	3
MHTLS	LIMIT SWITCH, GEARED	PROVIDES PRIMARY OVERTRAVEL LIMIT PROTECTION TO THE MAIN HOIST IN BOTH THE UP/DOWN DIRECTION OF TRAVEL	A1. FAILS OPEN B1. BROKEN CONTACTS	MAIN HOIST SYSTEM INOPERATIVE IN THE UP DIRECTION OF TRAVEL. HOIST WILL OPERATE IN THE DOWN DIRECTION OF TRAVEL.	DELAY FOR SYSTEM REPAIR	3
			A2. FAILS CLOSED B2. WELDED CONTACTS	LOSS OF PRIMARY OVERTRAVEL PROTECTION IN THE UP DIRECTION OF TRAVEL. WEIGHTED LIMIT SWITCH WILL STOP HOIST PRIOR TO CONTACT WITH TROLLEY. REQUIRES MULTIPLE FAILURE	DELAY FOR SYSTEM REPAIR	3

10/10/01 16:42:41

FAILURE MODES AND EFFECTS ANALYSIS (FMEA) WORKSHEET

System: 105/10-TON BRIDGE CRANE, OYSTER CREEK
Subsystem: MAIN HOIST CONTROL CIRCUIT
Drawing No.: DRAWING D-18408-806/807

PROGRAM
OYSTER CREEK 105/10 TON TROLLEY REPLACEMENT

 Date: 9/28/2000

PART NO.	PART NAME	PART FUNCTION	A. FAILURE MODE B. CAUSE	FAILURE EFFECT ON SYSTEM PERFORMANCE	FAILURE EFFECT ON SYSTEM OPERATION OR PERSONNEL SAFETY	CRIT CAT
MHWLS (MHULS)	LIMIT SWITCH, WEIGHTED, UP DIRECTION OF TRAVEL	PROVIDES OVERTRAVEL LIMIT PROTECTION TO THE MAIN HOIST	A1. FAILS OPEN B1. BROKEN CONTACTS	MAIN HOIST SYSTEM INOPERATIVE IN THE UP DIRECTION OF TRAVEL	DELAY FOR SYSTEM REPAIR	3
			A2. FAILS CLOSED B2. WELDED CONTACTS	LOSS OF OVERTRAVEL PROTECTION IN THE UP DIRECTION OF TRAVEL GEARED LIMIT SWITCH WILL STOP HOIST PRIOR TO CONTACT WITH WEIGHTED LIMIT SWITCH. REQUIRES MULTIPLE FAILURE	DELAY FOR SYSTEM REPAIR	3
MHWLS (MHDLS)	LIMIT SWITCH, WEIGHTED, DOWN DIRECTION OF TRAVEL	PROVIDES OVERTRAVEL LIMIT PROTECTION TO THE MAIN HOIST	A1. FAILS OPEN B1. BROKEN CONTACTS	MAIN HOIST SYSTEM INOPERATIVE IN THE DOWN DIRECTION OF TRAVEL	DELAY FOR SYSTEM REPAIR	3
			A2. FAILS CLOSED B2. WELDED CONTACTS	LOSS OF OVERTRAVEL PROTECTION IN THE DOWN DIRECTION OF TRAVEL. OPERATOR CAN STOP HOIST TRAVEL BY RELEASING JOYSTICK OR USING THE STOP BUTTON. REQUIRES MULTIPLE FAILURE	DELAY FOR SYSTEM REPAIR	3
MHTP	OVERLOAD, THERMAL	PROVIDES MAIN HOIST THERMAL OVERLOAD PROTECTION	A1. FAILS OPEN PREMATURELY B1. BROKEN CONTACT LEVER	MAIN HOIST SYSTEM INOPERATIVE.	DELAY FOR SYSTEM REPAIR	3
			A2. FAILS CLOSED B2. WELDED SWITCH/DEFECTIVE MATERIAL	LOSS OF THERMAL OVERLOAD PROTECTION, POSSIBLE DAMAGE TO MAIN HOIST MOTOR	DELAY FOR SYSTEM REPAIR	3

10/10/01 16:42:41

FAILURE MODES AND EFFECTS ANALYSIS (FMEA) WORKSHEET

System: 105/10-TON BRIDGE CRANE, OYSTER CREEK

Subsystem: MAIN HOIST CONTROL CIRCUIT

Drawing No.: DRAWING D-18408-806/807

PROGRAM

OYSTER CREEK 105/10 TON TROLLEY REPLACEMENT

Page 4 of 15 Date:9/28/2000

PART NO.	PART NAME	PART FUNCTION	A. FAILURE MODE B. CAUSE	FAILURE EFFECT ON SYSTEM PERFORMANCE	FAILURE EFFECT ON SYSTEM OPERATION OR PERSONNEL SAFETY	CRIT CAT
R6	CONTACTOR, 1 SET N.O. CONTACTS	PROVIDES ABILITY TO ENERGIZE MAIN HOIST DISC BRAKES COILS WHICH RELEASES BRAKES.	A1. COIL FAILS OPEN B1. DEFECTIVE COIL	HOIST SYSTEM INOPERATIVE IN UP DIRECTION OF TRAVEL	DELAY FOR SYSTEM REPAIR	3
			A2. COIL FAILS SHORTED B2. DEFECTIVE COIL	HOIST SYSTEM INOPERATIVE INOPERATIVE IN UP DIRECTION OF TRAVEL.	DELAY FOR SYSTEM REPAIR	3
			A3. CONTACTS FAIL OPEN B3. BROKEN CONTACT LEAF	HOIST SYSTEM INOPERATIVE INOPERATIVE IN UP DIRECTION OF TRAVEL.	DELAY FOR SYSTEM REPAIR	3
			A4. CONTACTS FAIL CLOSED B4. WELDED CONTACTS	LOSS OF ABILITY TO SET DRUM BRAKES DURING NORMAL STOP COMMAND. HOIST DRUM OVERSPEED WILL SENSE OVERSPEED AND TERMINATE MAIN LINE CONTACTOR WHICH WILL SET BRAKES. REQUIRES MULTIPLE FAILURES.	DELAY FOR SYSTEM REPAIR	3
R7	CONTACTOR, 1 SET N.O. CONTACTS	PROVIDES ABILITY TO ENERGIZE MAIN HOIST DISC BRAKES COILS WHICH RELEASES BRAKES.	A1. COIL FAILS OPEN B1. DEFECTIVE COIL	HOIST SYSTEM INOPERATIVE IN DOWN DIRECTION OF TRAVEL.	DELAY FOR SYSTEM REPAIR	3
			A2. COIL FAILS SHORTED B2. DEFECTIVE COIL	HOIST SYSTEM INOPERATIVE IN DOWN DIRECTION OF TRAVEL.	DELAY FOR SYSTEM REPAIR	3
			A3. CONTACTS FAIL OPEN B3. BROKEN CONTACT LEAF	HOIST SYSTEM INOPERATIVE IN THE DOWN DIRECTION OF TRAVEL.	DELAY FOR SYSTEM REPAIR	3
			A4 CONTACTS FAIL CLOSED B4. WELDED CONTACTS	LOSS OF ABILITY TO SET DRUM BRAKES DURING NORMAL STOP COMMAND. HOIST DRUM OVERSPEED WILL SENSE OVERSPEED AND TERMINATE MAIN LINE CONTACTOR WHICH WILL SET BRAKES. REQUIRES MULTIPLE FAILURES.	DELAY FOR SYSTEM REPAIR	3

10/10/01 16:42:41

FAILURE MODES AND EFFECTS ANALYSIS (FMEA) WORKSHEET

System: 105/10-TON BRIDGE CRANE, OYSTER CREEK
Subsystem: MAIN HOIST CONTROL CIRCUIT
Drawing No.: DRAWING D-18408-806/807

PROGRAM
OYSTER CREEK 105/10 TON TROLLEY REPLACEMENT

Page 5 of 15 Date: 9/28/2000

PART NO.	PART NAME	PART FUNCTION	A. FAILURE MODE B. CAUSE	FAILURE EFFECT ON SYSTEM PERFORMANCE	FAILURE EFFECT ON SYSTEM OPERATION OR PERSONNEL SAFETY	CRIT CAT
MHBR1	RECTIFIER, BRIDGE	PROVIDES CONSTANT VOLTAGE TO THE CRANE SYSTEM PROGRAMMABLE LOGIC CONTROLLER (PLC)	A1. FAILS OPEN B1. OPEN DIODE	LOSS OF POWER TO PLC, CRANE SYSTEM INOPERATIVE	DELAY FOR SYSTEM REPAIR	3
MHPLS	COIL, 1 N.C CONTACT	WHEN DE-ENERGIZED OPEN CONTACTS WHICH TERMINATES 120 VAC SIGNAL TO PLC AND TERMINATES HOIST SYSTEM OPERATION	A1. COIL FAILS OPEN B1. DEFECTIVE COIL	HOIST SYSTEM INOPERATIVE. HOIST BRAKES WILL SET AND HOLD LOAD.	DELAY FOR SYSTEM REPAIR	3
			A2. COIL FAILS SHORTED B2. DEFECTIVE COIL	HOIST SYSTEM INOPERATIVE HOIST BRAKES WILL SET AND HOLD LOAD.	DELAY FOR SYSTEM REPAIR	3
			A3. CONTACT FAIL OPEN B3 BROKEN CONTACT LEAF	HOIST SYSTEM INOPERATIVE HOIST BRAKES WILL SET AND HOLD LOAD.	DELAY FOR SYSTEM REPAIR	3
			A4. CONTACT FAILS CLOSED B4. WELDED CONTACT	NO EFFECT ON NORMAL OPERATION, LINE CS5 CIRCUIT BREAKER WILL PROTECT SYSTEM FROM OVERLOAD AND OPEN TERMINATING HOIST OPERATION IF REQUIRED. REQUIRES MULTIPLE FAILURES	DELAY FOR SYSTEM REPAIR	3
MHLLS	SWITCH, REDUNDANT LOWER LIMIT	PROVIDES REDUNDANT METHOD TO PREVENT OVERTRAVEL IN THE DOWN DIRECTION OF TRAVEL.	A1. FAILS OPEN B1. BROKEN CONTACT LEAF	TERMINATES 120 VAC SIGNAL TO PLC TERMINATING HOIST OPERATIONS IN THE DOWN DIRECTION OF TRAVEL.	DELAY FOR SYSTEM REPAIR	3
			A2. FAILS CLOSED B2. WELDED CONTACTS	LOSS OF REDUNDANT OVERTRAVEL LIMIT PROTECTION. GEARED LIMIT SWITCH IS THE PRIMARY DOWN LIMIT PROTECTION AND WILL STOP HOIST MOTION. REQUIRES MULTIPLE FAILURES	DELAY FOR SYSTEM REPAIR	3

FAILURE MODES AND EFFECTS ANALYSIS (FMEA) WORKSHEET

System: 105/10-TON BRIDGE CRANE, OYSTER CREEK
Subsystem: MAIN HOIST CONTROL CIRCUIT
Drawing No.: DRAWING D-18408-806/807

PROGRAM
OYSTER CREEK 105/10 TON TROLLEY REPLACEMENT

 Date: 9/28/2000

PART NO.	PART NAME	PART FUNCTION	A. FAILURE MODE B. CAUSE	FAILURE EFFECT ON SYSTEM PERFORMANCE	FAILURE EFFECT ON SYSTEM OPERATION OR PERSONNEL SAFETY	CRIT CAT
MHBC	CONTACTOR, 1 N.O. CONTACT	PROVIDES THE ABILITY TO CLOSE CONTACT MHBC1 WHICH ENERGIZES BRAKE COIL AND RELEASES DRUM BRAKES.	A1. COIL FAILS OPEN B1. DEFECTIVE COIL	HOIST DRUM BRAKE WILL REMAIN ENGAGED. HOIST SYSTEM INOPERATIVE.	DELAY FOR SYSTEM REPAIR	3
			A2. COIL FAILS SHORTED B2. DEFECTIVE COIL	HOIST DRUM BRAKE WILL REMAIN ENGAGED. HOIST SYSTEM INOPERATIVE.	DELAY FOR SYSTEM REPAIR	3
			A3. CONTACT FAIL OPEN B3. BROKEN CONTACT LEAF	HOIST DRUM BRAKE WILL REMAIN ENGAGED. HOIST SYSTEM INOPERATIVE.	DELAY FOR SYSTEM REPAIR	3
			A4. CONTACT FAILS CLOSED B4. WELDED CONTACT	LOSS OF ABILITY TO ENGAGE MAIN HOIST DISC BRAKES WHEN STOP COMMAND IS ISSUED. PLC AND MOTOR ENCODER WILL SENSE A DIFFERENCE BETWEEN COMMAND LEVEL AND ACTUAL CONDITION AND TERMINATE MAIN LINE CONTACTOR WHICH WILL SET ALL BRAKES. REQUIRES MULTIPLE FAILURES	DELAY FOR SYSTEM REPAIR	3
R8	CONTACTOR, 1 N.O. CONTACT	WHEN DE-ENERGIZED PROVIDES THE ABILITY TO ENERGIZE RED WARNING LIGHT INDICATING MAIN HOIST BRAKE FAULT AND TERMINATES HOIST SYSTEM OPERATION	A1. COIL FAILS OPEN B1. DEFECTIVE COIL	LOSS OF VISUAL WARNING OF MAIN HOIST BRAKE FAULT. PLC WILL SENSE BRAKE FAULT AND TERMINATE ALL HOIST OPERATIONS.	DELAY FOR SYSTEM REPAIR	3
			A2. COIL FAILS SHORTED B2. DEFECTIVE COIL	LOSS OF VISUAL WARNING OF MAIN HOIST BRAKE FAULT. PLC WILL SENSE BRAKE FAULT AND TERMINATE ALL HOIST OPERATIONS.	DELAY FOR SYSTEM REPAIR	3

10/10/01 16:42:41

FAILURE MODES AND EFFECTS ANALYSIS (FMEA) WORKSHEET

System: 105/10-TON BRIDGE CRANE, OYSTER CREEK
Subsystem: MAIN HOIST CONTROL CIRCUIT
Drawing No.: DRAWING D-18408-806/807

PROGRAM
OYSTER CREEK 105/10 TON TROLLEY REPLACEMENT

 Date: 9/28/2000

PART NO.	PART NAME	PART FUNCTION	A. FAILURE MODE B. CAUSE	FAILURE EFFECT ON SYSTEM PERFORMANCE	FAILURE EFFECT ON SYSTEM OPERATION OR PERSONNEL SAFETY	CRIT CAT
R8 (CONT)	CONTACTOR, 1 N.O. CONTACT		A3. CONTACT FAIL OPEN B3. BROKEN CONTACT LEAF	LOSS OF VISUAL WARNING OF MAIN HOIST BRAKE FAULT. PLC WILL SENSE BRAKE FAULT AND TERMINATE ALL HOIST OPERATIONS.	DELAY FOR SYSTEM REPAIR	3
			A4. CONTACT FAILS CLOSED B4. WELDED CONTACT	LOSS OF VISUAL WARNING OF HOIST BRAKE FAULT. PLC WILL SENSE DIFFERENCE BETWEEN COMMAND LEVEL AND ENCODER FEED BACK AND TERMINATE HOIST OPERATIONS. STOP BUTTON IS ALSO AVAILABLE TO STOP CRANE MOTION. REQUIRES MULTIPLE FAILURES.	DELAY FOR SYSTEM REPAIR	3
R9	CONTACTOR, 1 N.O. CONTACT	WHEN DE-ENERGIZED PROVIDES THE ABILITY TO ENERGIZE AFD WARNING LIGHT INDICATING MAIN HOIST AFD FAULT AND TERMINATES HOIST OPERATION.	A1 COIL FAILS OPEN B1. DEFECTIVE COIL	LOSS OF VISUAL WARNING OF MAIN HOIST AFD FAULT. PLC WILL SENSE FAULT AND TERMINATE ALL HOIST OPERATIONS.	DELAY FOR SYSTEM REPAIR	3
			A2. COIL FAILS SHORTED B2. DEFECTIVE COIL	LOSS OF VISUAL WARNING OF MAIN HOIST AFD FAULT. PLC WILL SENSE FAULT AND TERMINATE ALL HOIST OPERATIONS.	DELAY FOR SYSTEM REPAIR	3
			A3. CONTACT FAIL OPEN B3. BROKEN CONTACT LEAF	LOSS OF VISUAL WARNING OF MAIN HOIST AFD FAULT. PLC WILL SENSE FAULT AND TERMINATE ALL HOIST OPERATIONS.	DELAY FOR SYSTEM REPAIR	3

10/10/01 16:42:41

FAILURE MODES AND EFFECTS ANALYSIS (FMEA) WORKSHEET

System: 105/10-TON BRIDGE CRANE, OYSTER CREEK
Subsystem: MAIN HOIST CONTROL CIRCUIT
Drawing No.: DRAWING D-18408-806/807

PROGRAM
OYSTER CREEK 105/10 TON TROLLEY REPLACEMENT

 Date: 9/28/2000

PART NO.	PART NAME	PART FUNCTION	A. FAILURE MODE B. CAUSE	FAILURE EFFECT ON SYSTEM PERFORMANCE	FAILURE EFFECT ON SYSTEM OPERATION OR PERSONNEL SAFETY	CRIT CAT
R9 (CONT)	CONTACTOR, 1 N.O. CONTACT		A4. CONTACT FAILS CLOSED B4. WELDED CONTACT	LOSS OF VISUAL WARNING OF GENERAL AFD FAULT. PLC WILL SENSE FAULT AND TERMINATE ALL HOIST OPERATIONS. STOP BUTTON IS ALSO AVAILABLE TO STOP CRANE MOTION REQUIRES MULTIPLE FAILURES	DELAY FOR SYSTEM REPAIR	3
R10	CONTACTOR, 1 N.O. CONTACT	PROVIDES THE ABILITY TO ENGAGE "CRITICAL LOAD" SYSTEM THAT DISABLES HOIST SYSTEMS ABILITY TO OPERATE ABOVE 60 HERTZ (FASTER THAN NORMAL) AND ENERGIZES HOIST OVERSPEED SYSTEM	A1. COIL FAILS OPEN B1. DEFECTIVE COIL	LOSS OF ABILITY TO ENGAGE CRITICAL LOAD OPERATIONAL LIMITS.	DELAY FOR SYSTEM REPAIR	3
			A2. COIL FAILS SHORTED B2. DEFECTIVE COIL	LOSS OF ABILITY TO ENGAGE CRITICAL LOAD OPERATIONAL LIMITS.	DELAY FOR SYSTEM REPAIR	3
			A3. CONTACT FAIL OPEN B3. BROKEN CONTACT LEAF	LOSS OF ABILITY TO ENGAGE CRITICAL LOAD OPERATIONAL LIMITS.	DELAY FOR SYSTEM REPAIR	3
			A4. CONTACT FAILS CLOSED B4 WELDED CONTACT	LOSS OF ABILITY TO ENERGIZE HOIST OVERSPEED SYSTEM, REQUIRES MULTIPLE FAILURES	DELAY FOR SYSTEM REPAIR	3
SS1	SWITCH, SELECTOR	PROVIDES THE ABILITY TO SWITCH BETWEEN CRITICAL AND NON-CRITICAL LOAD OPERATIONAL MODE	A1. FAILS CLOSED B1. WELDED CONTACTS	LOSS OF CRITICAL LOAD OPERATIONAL MODE	DELAY FOR SYSTEM REPAIR	3
			A2. FAILS OPEN B2 INTERNAL PART FAILURE	LOSS OF ABILITY TO OPERATE HOIST MAIN SYSTEM AT GREATER THAN 60 HERTZ POWER	DELAY FOR SYSTEM REPAIR	3

10/10/01 16:42:41

FAILURE MODES AND EFFECTS ANALYSIS (FMEA) WORKSHEET

System: 105/10-TON BRIDGE CRANE, OYSTER CREEK
Subsystem: MAIN HOIST CONTROL CIRCUIT
Drawing No.: DRAWING D-18408-806/807

PROGRAM
OYSTER CREEK 105/10 TON TROLLEY REPLACEMENT

 Date: 9/28/2000

PART NO.	PART NAME	PART FUNCTION	A. FAILURE MODE B. CAUSE	FAILURE EFFECT ON SYSTEM PERFORMANCE	FAILURE EFFECT ON SYSTEM OPERATION OR PERSONNEL SAFETY	CRIT CAT
MHWRM-E	EMITTER, PHOTO ELECTRIC EYE	PROVIDES LIGHT BEAM USED TO SENSE MIS-SPOOLING OF WIRE ROPE ON DRUM.	A1. FAILS TO EMIT B1. OPEN CIRCUIT	HOIST SYSTEM WILL SENSE A MIS-SPOOLING CONDITION AND TERMINATE OPERATIONS AND APPLY HOIST BRAKES.	DELAY FOR SYSTEM REPAIR	3
MHWRM-R	RECEIVER, PHOTO ELECTRIC EYE	RECEIVES LIGHT BEAM FROM EMITTER USED TO SENSE MIS-SPOOLING OF WIRE ROPE ON DRUM.	A1. FAILS TO EMIT B1 OPEN CIRCUIT	HOIST SYSTEM WILL SENSE A MIS-SPOOLING CONDITION AND TERMINATE OPERATIONS AND APPLY HOIST BRAKES.	DELAY FOR SYSTEM REPAIR	3
R11	CONTACTOR, 2 N.C. AND 1 N.O. CONTACTS	PROVIDES ABILITY TO DE-ENERGIZE HOIST SYSTEM IF A WIRE ROPE MIS-SPOOLING IS DETECTED	A1. COIL FAILS OPEN B1 DEFECTIVE COIL	HOIST SYSTEM INOPERATIVE, ALL BRAKES WILL REMAIN SET	DELAY FOR SYSTEM REPAIR	3
			A2. COIL FAILS SHORTED B2 DEFECTIVE COIL	HOIST SYSTEM INOPERATIVE, ALL BRAKES WILL REMAIN SET	DELAY FOR SYSTEM REPAIR	3
			A3. N.C. CONTACTS FAIL OPEN B3. BROKEN CONTACT LEAF	HOIST SYSTEM INOPERATIVE, ALL BRAKES WILL REMAIN SET.		
			A4. N.C. CONTACT FAILS CLOSED B4. WELDED CONTACT	HOIST PLC WILL SENSE THE MIS-SPOOLING AND TERMINATE HOIST SYSTEM OPERATIONS. REQUIRES MULTIPLE FAILURE.	DELAY FOR SYSTEM REPAIR	3
			A5. N.O. CONTACTS FAIL OPEN B5. BROKEN CONTACT LEAF	LOSS OF VISUAL WARNING LIGHT INDICATING A MIS-SPOOLING CONDITION. N.C CONTACTS WILL OPEN AND TERMINATE HOIST SYSTEM OPERATION. REQUIRES MULTIPLE FAILURES TO BECOME CRITICAL.	DELAY FOR SYSTEM REPAIR	3
			A6. N.O. CONTACTS FAIL CLOSED B6. WELDED CONTACTS	HOIST SYSTEM INOPERATIVE.	DELAY FOR SYSTEM REPAIR	3

10/10/01 16:42:41

FAILURE MODES AND EFFECTS ANALYSIS (FMEA) WORKSHEET

System: 105/10-TON BRIDGE CRANE, OYSTER CREEK

Subsystem: MAIN HOIST CONTROL CIRCUIT

Drawing No.: DRAWING D-18408-806/807

PROGRAM

OYSTER CREEK 105/10 TON TROLLEY REPLACEMENT

Page 10 of 15 Date:9/28/2000

PART NO.	PART NAME	PART FUNCTION	A. FAILURE MODE B. CAUSE	FAILURE EFFECT ON SYSTEM PERFORMANCE	FAILURE EFFECT ON SYSTEM OPERATION OR PERSONNEL SAFETY	CRIT CAT
SS3	SWITCH, SELECTOR	PROVIDES THE ABILITY TO ENERGIZE MAIN HOIST OVERSPEED SYSTEM FOR CRITICAL LOAD LIFTS.	A1. FAILS OPEN B1. INTERNAL PART FAILURE	LOSS OF ABILITY TO ENERGIZE MAIN HOIST OVERSPEED SYSTEM FOR CRITICAL LOAD OPERATIONS.	DELAY FOR SYSTEM REPAIR	3
			A2 FAILS CLOSED B2 WELDED CONTACTS	LOSS OF ABILITY TO TERMINATE CRITICAL LOAD LIFT MODE OF OPERATION. HOIST UNABLE TO OPERATE ABOVE 60 HERTZ AND OVERSPEED SYSTEM WILL REMAIN IN EFFECT.	DELAY FOR SYSTEM REPAIR	3
SDPS	POWER SUPPLY, SPEED DETECTOR	PROVIDES THE REQUIRED POWER TO OPERATE THE HOIST DRUM OVERSPEED SENSOR SYSTEM.	A1. FAILS TO SUPPLY POWER B1 INTERNAL FAULT	MAIN HOIST PLC WILL SENSE SYSTEM FAULT AND TERMINATE HOIST OPERATIONS AND SET ALL HOIST BRAKES. REQUIRES MULTIPLE FAILURES.	DELAY FOR SYSTEM REPAIR	3
MHSD	SPEED DETECTOR, MAIN HOIST	PROVIDES MONITORING OF MAIN HOIST DRUM SPEED. IF PRE-SET OVERSPEED LIMIT IS EXCEEDED MAIN HOIST PLC WILL SENSE FAILURE AND TERMINATE HOIST OPERATIONS AND ENGAGE ALL SYSTEM BRAKES	A1. FAILS OPEN B1. INTERNAL CIRCUIT FAULT	HOIST SYSTEM INOPERATIVE ALL HOIST BRAKES WILL SET AND HOLD.	DELAY FOR SYSTEM REPAIR	3
			A2. FAILS TO DETECT OVERSPEED B2. INTERNAL CIRCUIT FAULT	HOIST MOTOR WILL SENSE A DIFFERENCE BETWEEN COMMAND LEVEL AND ACTUAL SPEED AND FAULT SYSTEM ALL HOIST BRAKES WILL ENGAGE. REQUIRES MULTIPLE FAILURE	DELAY FOR SYSTEM REPAIR	3

10/10/01 16:42:41

SEPTEMBER 2000

FAILURE MODES AND EFFECTS ANALYSIS (FMEA) WORKSHEET

System: 105/10-TON BRIDGE CRANE, OYSTER CREEK
Subsystem: MAIN HOIST CONTROL CIRCUIT
Drawing No.: DRAWING D-18408-806/807

PROGRAM
OYSTER CREEK 105/10 TON TROLLEY REPLACEMENT

 Date: 9/28/2000

PART NO.	PART NAME	PART FUNCTION	A. FAILURE MODE B. CAUSE	FAILURE EFFECT ON SYSTEM PERFORMANCE	FAILURE EFFECT ON SYSTEM OPERATION OR PERSONNEL SAFETY	CRIT CAT
R12	CONTACTOR	PROVIDES ABILITY TO ENERGIZE MAIN HOIST DRUM OVERSPEED SYSTEM WHILE IN NON-CRITICAL LOAD LIFT MODE.	A1. COIL FAILS OPEN B1. DEFECTIVE COIL	LOSS OF OVERSPEED SYSTEM WHILE IN NON-CRITICAL LOAD LIFT MODE. HOIST PLC WILL SENSE DIFFERENCE BETWEEN COMMAND LEVEL AND ACTUAL DRUM SPEED AND TERMINATE HOIST OPERATIONS. REQUIRES MULTIPLE FAILURES.	DELAY FOR SYSTEM REPAIR	3
			A2. COIL FAILS SHORTED B2. DEFECTIVE COIL	LOSS OF OVERSPEED SYSTEM WHILE IN NON-CRITICAL LOAD LIFT MODE. HOIST PLC WILL SENSE DIFFERENCE BETWEEN COMMAND LEVEL AND ACTUAL DRUM SPEED AND TERMINATE HOIST OPERATIONS. REQUIRES MULTIPLE FAILURES.	DELAY FOR SYSTEM REPAIR	3
MHELS-1	SWITCH, EQUALIZER LIMIT	PROVIDES OVERTRAVEL PROTECTION AGAINST EQUALIZER TRAVEL PAST A PRE-SET LIMIT.	A1. FAILS OPEN B1. BROKEN SWITCH LEVER	MAIN HOIST SYSTEM PLC WILL SENSE FAULT AND TERMINATE HOIST SYSTEM OPERATIONS. WARNING LIGHT WILL LIGHT TO NOTIFY OPERATOR OF FAULT.	DELAY FOR SYSTEM REPAIR	3
			A2. FAILS CLOSED B2. WELDED SWITCH CONTACT	NO EFFECT, REDUNDANT LIMIT SWITCH MHELS2 WILL ACTIVATE AND TERMINATE HOIST SYSTEM OPERATIONS. REQUIRES MULTIPLE FAILURES	DELAY FOR SYSTEM REPAIR	3
MHELS-2	SWITCH, EQUALIZER LIMIT	PROVIDES OVERTRAVEL PROTECTION AGAINST EQUALIZER TRAVEL PAST A PRE-SET LIMIT.	A1. FAILS OPEN B1. BROKEN SWITCH LEVER	MAIN HOIST SYSTEM PLC WILL SENSE FAULT AND TERMINATE HOIST SYSTEM OPERATIONS WARNING LIGHT WILL LIGHT TO NOTIFY OPERATOR OF FAULT.	DELAY FOR SYSTEM REPAIR	3
			A2. FAILS CLOSED B2. WELDED SWITCH CONTACT	NO EFFECT, REDUNDANT LIMIT SWITCH MHELS1 WILL ACTIVATE AND TERMINATE HOIST SYSTEM OPERATIONS. REQUIRES MULTIPLE FAILURES	DELAY FOR SYSTEM REPAIR	3

10/10/01 16:42:41

FAILURE MODES AND EFFECTS ANALYSIS (FMEA) WORKSHEET

System: 105/10-TON BRIDGE CRANE, OYSTER CREEK
Subsystem: MAIN HOIST CONTROL CIRCUIT
Drawing No.: DRAWING D-18408-806/807

PROGRAM
OYSTER CREEK 105/10 TON TROLLEY REPLACEMENT

 Date: 9/28/2000

PART NO.	PART NAME	PART FUNCTION	A. FAILURE MODE B. CAUSE	FAILURE EFFECT ON SYSTEM PERFORMANCE	FAILURE EFFECT ON SYSTEM OPERATION OR PERSONNEL SAFETY	CRIT CAT
R13	CONTACTOR, 1 N.O. CONTACT, 1 N.C. CONTACT	WHEN DE-ENERGIZED PROVIDES THE ABILITY TO TERMINATE HOIST OPERATIONS IF AN EQUALIZER OVERTRAVEL HAS OCCURRED.	A1. COIL FAILS OPEN B1. DEFECTIVE COIL	HOIST PLC WILL SENSE FAULT, HOIST SYSTEM INOPERATIVE, ALL BRAKES WILL REMAIN ENGAGED.	DELAY FOR SYSTEM REPAIR	3
			A2. COIL FAILS SHORTED B2. DEFECTIVE COIL	HOIST PLC WILL SENSE FAULT, HOIST SYSTEM INOPERATIVE, ALL BRAKES WILL REMAIN ENGAGED.	DELAY FOR SYSTEM REPAIR	3
			A3. N.C. CONTACTS FAIL OPEN B3 BROKEN CONTACT LEAF	HOIST SYSTEM INOPERATIVE IN THE UP DIRECTION OF TRAVEL.	DELAY FOR SYSTEM REPAIR	3
			A4 N.C. CONTACT FAILS CLOSED B4 WELDED CONTACT	HOIST PLC WILL SENSE EQUALIZER OVERTRAVEL AND TERMINATE HOIST SYSTEM OPERATION AND LIGHT WARNING LIGHT	DELAY FOR SYSTEM REPAIR	3
			A5. N.O. CONTACTS FAIL OPEN B5. BROKEN CONTACT LEAF	LOSS OF SIGNAL FOR OVERTRAVEL TO HOIST P.L.C. N.C. CONTACTS WILL TERMINATE HOIST OPERATION IN THE UP DIRECTION OF TRAVEL.	DELAY FOR SYSTEM REPAIR	3
			A6. N.O. CONTACTS FAIL CLOSED B6. WELDED CONTACTS	HOIST SYSTEM INOPERATIVE	DELAY FOR SYSTEM REPAIR	3
TMR1	RELAY, TIMED SWITCH, 60 SECOND DELAY	PROVIDES TIME DELAY CLOSURE OF SWITCH TMR1 WHICH ENERGIZES MAIN HOIST BRAKE SOLENOID COILS.	A1. COIL FAILS OPEN B1. DEFECTIVE COIL	HOIST SYSTEM BRAKES WILL REMAIN ENGAGED, HOIST SYSTEM INOPERATIVE	DELAY FOR SYSTEM REPAIR	3
			A2. COIL FAILS SHORTED B2. DEFECTIVE COIL	HOIST SYSTEM BRAKES WILL REMAIN ENGAGED, HOIST SYSTEM INOPERATIVE	DELAY FOR SYSTEM REPAIR	3

10/10/01 16:42:41

FAILURE MODES AND EFFECTS ANALYSIS (FMEA) WORKSHEET

System: 105/10-TON BRIDGE CRANE, OYSTER CREEK
Subsystem: MAIN HOIST CONTROL CIRCUIT
Drawing No.: DRAWING D-18408-806/807

PROGRAM
OYSTER CREEK 105/10 TON TROLLEY REPLACEMENT

 Date: 9/28/2000

PART NO.	PART NAME	PART FUNCTION	A. FAILURE MODE B. CAUSE	FAILURE EFFECT ON SYSTEM PERFORMANCE	FAILURE EFFECT ON SYSTEM OPERATION OR PERSONNEL SAFETY	CRIT CAT
			A3. SWITCH FAILS OPEN B3. BROKEN CONTACT LEAF	HOIST SYSTEM BRAKES WILL REMAIN ENGAGED, HOIST SYSTEM INOPERATIVE.	DELAY FOR SYSTEM REPAIR	3
			A4. SWITCH FAILS CLOSED B4. WELDED SWITCH CONTACT	HOIST SYSTEM BRAKES WILL NOT ENGAGE ON COMMAND OF ALL STOP. HOIST PLC WILL SENSE DIFFERENCE BETWEEN ENCODER SIGNAL AND COMMAND LEVEL AND FAULT SYSTEM. HOIST MAIN LINE CONTACTOR WILL OPEN AND DE-ENEGIZE HOIST BRAKE COILS SETTING ALL BRAKES REQUIRES MULTIPLE FAILURES	DELAY FOR SYSTEM REPAIR	3
SV1 SV2	COILS, MAIN HOIST BRAKE	WHEN ENERGIZED PROVIDES POWER REQUIRED TO DIS-ENGAGE MAIN HOIST DISC BRAKES.	A1. COIL FAILS OPEN B1. DEFECTIVE COIL	MAIN HOIST BRAKES REMAIN ENGAGED, HOIST SYSTEM INOPERATIVE.	DELAY FOR SYSTEM REPAIR	3
			A2. COIL FAILS SHORTED B2. DEFECTIVE COIL	MAIN HOIST BRAKES REMAIN ENGAGED, HOIST SYSTEM INOPERATIVE.	DELAY FOR SYSTEM REPAIR	3
PS	SWITCH, PRESSURE	OPENS AT 100PSI COMPRESSED AIR PRESSURE AND TERMINATES AIR COMPRESSOR OPERATION.	A1. SWITCH FAILS OPEN B1. BROKEN CONTACT LEAF	COMPRESSOR WILL NOT OPERATE, LOSS OF AIR PRESSURE WILL ENGAGE HOIST SYSTEM BRAKES HOIST SYSTEM INOPERATIVE	DELAY FOR SYSTEM REPAIR	3
			A2. SWITCH FAILS CLOSED B2. WELDED CONTACT	COMPRESSOR WILL CONTINUE TO RUN AFTER SET PRESSURE HAS BEEN REACHED.	DELAY FOR SYSTEM REPAIR	3
ACC	CONTACTOR, 1 N.O. CONTACT	WHEN ENERGIZED PROVIDES ABILITY TO CLOSE CONTACT AND ENERGIZE AIR COMPRESSOR.	A1. COIL FAILS OPEN B1. DEFECTIVE COIL	AIR COMPRESSOR INOPERATIVE, LOW AIR SUPPLY WILL CAUSE HOIST BRAKES TO ENGAGE. HOIST SYSTEM INOPERATIVE	DELAY FOR SYSTEM REPAIR	3

10/10/01 16:42:41

SEPTEMBER 2000

FAILURE MODES AND EFFECTS ANALYSIS (FMEA) WORKSHEET

System: 105/10-TON BRIDGE CRANE, OYSTER CREEK
Subsystem: MAIN HOIST CONTROL CIRCUIT
Drawing No.: DRAWING D-18408-806/807

PROGRAM
OYSTER CREEK 105/10 TON TROLLEY REPLACEMENT

 Date: 9/28/2000

PART NO.	PART NAME	PART FUNCTION	A. FAILURE MODE B. CAUSE	FAILURE EFFECT ON SYSTEM PERFORMANCE	FAILURE EFFECT ON SYSTEM OPERATION OR PERSONNEL SAFETY	CRIT CAT
ACC (CONT)	CONTACTOR, 1 N O CONTACT		A2. COIL FAILS SHORTED B2. DEFECTIVE COIL	AIR COMPRESSOR INOPERATIVE, LOW AIR SUPPLY WILL CAUSE HOIST BRAKES TO ENGAGE. HOIST SYSTEM INOPERATIVE.	DELAY FOR SYSTEM REPAIR	3
			A3. CONTACT FAILS OPEN B3. BROKEN CONTACT LEAF	AIR COMPRESSOR INOPERATIVE, LOW AIR SUPPLY WILL CAUSE HOIST BRAKES TO ENGAGE. HOIST SYSTEM INOPERATIVE	DELAY FOR SYSTEM REPAIR	3
			A4. CONTACT FAILS CLOSED B4 WELDED CONTACT	AIR COMPRESSOR WILL CONTINUE TO RUN AFTER SET POINT HAS BEEN REACHED. AIR COMPRESSOR OVERLOAD WILL TERMINATE COMPRESSOR OPERATION TO PROTECT COMPRESSOR SYSTEM. LOW AIR SUPPLY WILL ENGAGE HOIST BRAKES, HOIST SYSTEM INOPERATIVE.	DELAY FOR SYSTEM REPAIR	3
MHBLS1 MHBLS2	SWITCH, LIMIT, HOIST BRAKES	WHEN CLOSED ENERGIZES COIL R14 WHICH CLOSES CONTACT R14 AND ALLOWS HOIST MOTOR OPERATION.	A1. 1 SWITCH FAILS OPEN B1. BROKEN CONTACT LEAF	HOIST SYSTEM INOPERATIVE.	DELAY FOR SYSTEM REPAIR	3
			A2. 1 SWITCH FAILS CLOSED B2. WELDED CONTACT	NO EFFECT, REDUNDANT SWITCH WILL TERMINATE HOIST SYSTEM OPERATION. REQUIRES MULTIPLE FAILURES	DELAY FOR SYSTEM REPAIR	3
R14	CONTACTOR, 2 N.O CONTACTS	WHEN ENERGIZED CLOSES CONTACTS THAT PROVIDE ABILITY TO ENERGIZE HOIST MAIN MOTOR.	A1. COIL FAILS OPEN B1. DEFECTIVE COIL	HOIST SYSTEM INOPERATIVE	DELAY FOR SYSTEM REPAIR	3
			A2. COIL FAILS SHORTED B2. DEFECTIVE COIL	HOIST SYSTEM INOPERATIVE	DELAY FOR SYSTEM REPAIR	3

10/10/01 16:42:41

SEPTEMBER 2000

FAILURE MODES AND EFFECTS ANALYSIS (FMEA) WORKSHEET

System: 105/10-TON BRIDGE CRANE, OYSTER CREEK
Subsystem: MAIN HOIST CONTROL CIRCUIT
Drawing No.: DRAWING D-18408-806/807

PROGRAM
OYSTER CREEK 105/10 TON TROLLEY REPLACEMENT

 Date: 9/28/2000

PART NO.	PART NAME	PART FUNCTION	A. FAILURE MODE B. CAUSE	FAILURE EFFECT ON SYSTEM PERFORMANCE	FAILURE EFFECT ON SYSTEM OPERATION OR PERSONNEL SAFETY	CRIT CAT
R14 (CONT)	CONTACTOR, 2 N.O. CONTACTS		A3. 1 CONTACT FAILS OPEN B3 BROKEN CONTACT LEAF	EFFECTED HOIST SYSTEM INOPERATIVE	DELAY FOR SYSTEM REPAIR	3
			A4. 1 CONTACT FAILS CLOSED B4. WELDED CONTACT	NO EFFECT ON NORMAL OPERATION.	DELAY FOR SYSTEM REPAIR	3
LOLS	LIMIT SWITCH, LOW OIL	PROVIDES PROTECTION AGAINST DAMAGE TO THE AIR COMPRESSOR DUE TO LOW OIL PRESSURE.	A1. FAILS OPEN B1. BROKEN CONTACT LEAF	AIR COMPRESSOR INOPERATIVE	DELAY FOR SYSTEM REPAIR	3
			A2. FAILS CLOSED B2. WELDED CONTACT	POSSIBLE DAMAGE TO COMPRESSOR IN THE EVENT OF LOSS OF OIL PRESSURE	DELAY FOR SYSTEM REPAIR	3

FAILURE MODES AND EFFECTS ANALYSIS (FMEA) WORKSHEET

System: 105/10-TON BRIDGE CRANE, OYSTER CREEK

Subsystem: HOIST PROGRAMABLE LOGIC CONTROLLER

Drawing No.: DRAWING D-18408-801

PROGRAM

105/10 BRIDGE CRANE
OYSTER CREEK

Page 1 of 1 Date: 09/28/2000

FIND NO.	PART NAME	PART FUNCTION	A. FAILURE MODE B. CAUSE	FAILURE EFFECT ON SYSTEM PERFORMANCE	FAILURE EFFECT ON SYSTEM OPERATION OR PERSONNEL SAFETY	CRIT CAT
MULTIPLE PART NUMBERS	PROGRAMABLE LOGIC CONTROLLER INCLUDING COMMUNICATION MODULES	PROVIDES THE OPERATOR THE ABILITY TO ISSUE PERCISE SPEED COMMANDS TO THE HOIST SYSTEM.	A1. ERRONEOUS OUTPUT B1. INTERNAL CIRCUIT FAILURE	PROVIDES PRECISE SPEED COMMANDS TO THE TROLLEY AFD, PLC MONITORS BOTH OPERATOR COMMAND LEVEL AND MOTOR OUTPUT. IF PLC SENSES A DIFFERENCE BETWEEN COMMAND LEVE AND ACTUAL PLC WILL ISSUE A STOP COMMAND	DELAY FOR SYSTEM REPAIR	3
			A2 NO OUTPUT B2 INTERNAL CIRCUIT FAILURE	HOIST SYSTEM INOPERATIVE	DELAY FOR SYSTEM REPAIR	3
			A3 UNCOMMANDED OUTPUT B3 INTERNAL CIRCUIT FAILURE	UNCOMMANDED PLC OUTPUT OPERATOR CAN STOP CRANE SYSTEM BY USING STOP BUTTON OR BY RELEASING JOY STICK. REQUIRES MULTIPLE FAILURES.	DELAY FOR SYSTEM REPAIR	3

FAILURE MODES AND EFFECTS ANALYSIS (FMEA) WORKSHEET

System: 105/10-TON BRIDGE CRANE, OYSTER CREEK

Subsystem: HOIST SYSTEM ELECTRICAL

Drawing No.: DRAWING D-17044-804

PROGRAM

105/10-TON BRIDGE CRANE
OYSTER CREEK

Page 1 of 2 Date: 09/28/2000

FIND NO.	PART NAME	PART FUNCTION	A. FAILURE MODE B. CAUSE	FAILURE EFFECT ON SYSTEM PERFORMANCE	FAILURE EFFECT ON SYSTEM OPERATION OR PERSONNEL SAFETY	CRIT CAT
365TC	MOTOR, HOIST, 50 HP	PROVIDES MOTIVE FORCE REQUIRED TO OPERATE HOIST SYSTEM	A1. FAILS TO OPERATE B1. DEFECTIVE WINDINGS	HOIST SYSTEM INOPERATIVE. PLC WILL SENSE LOSS AND MAINTAIN MOTOR BRAKE IN ENGAGED POSITION	DELAY FOR SYSTEM REPAIR	3
			A2. FAILS DURING OPERATION B2 DEFECTIVE WINDINGS	HOIST SYSTEM INOPERATIVE. PLC WILL SENSE LOSS AND ENGAGED MOTOR BRAKE AND EMERGENCY BRAKE.	DELAY FOR SYSTEM REPAIR	3
MHLR	LINE REACTOR, 460 VAC	PROVIDES LINE VOLTAGE BUFFERING OF INBOUND POWER TO THE HOIST DRIVE SYSTEM	A1. FAILS OPEN B1. INTERNAL PART FAILURE	HOIST DRIVE SYSTEM INOPERATIVE.	DELAY FOR SYSTEM REPAIR	3
			A2 FAILS TO BUFFER VOLTAGE B2 INTERNAL PART FAILURE	POSSIBLE DAMAGE TO HOIST DRIVE SYSTEM COMPONENTS DUE TO VOLTAGE SPIKES	DELAY FOR SYSTEM REPAIR	3
DB	BRAKE, DYNAMIC	PROVIDES LOAD CONTROL USING DYNAMIC BRAKING WHILE LOAD IS MOVING DOWNWARD	A1 RESISTORS FAIL OPEN B1 STRUCTURAL FAILURE	LOSS OF DYNAMIC BRAKING, LOAD WILL NOT DECEND SMOOTHLY HOIST MOTOR WILL MAINTAIN CONTROL OF LOAD PLC WILL SENSE DB LOSS.	DELAY FOR SYSTEM REPAIR	3
			A2. MODULE FAULT B2 INTERNAL PART FAILURE	LOSS OF DYNAMIC BRAKING, LOAD WILL NOT DECEND SMOOTHLY. HOIST MOTOR WILL MAINTAIN CONTROL OF LOAD PLC WILL SENSE DB LOSS	DELAY FOR SYSTEM REPAIR	3

FAILURE MODES AND EFFECTS ANALYSIS (FMEA) WORKSHEET

System: 105/10-TON BRIDGE CRANE, OYSTER CREEK
Subsystem: HOIST SYSTEM ELECTRICAL
Drawing No.: DRAWING D-17044-804

PROGRAM
105/10-TON BRIDGE CRANE
OYSTER CREEK

Page 2 of 2 Date: 09/28/2000

FIND NO.	PART NAME	PART FUNCTION	A. FAILURE MODE B. CAUSE	FAILURE EFFECT ON SYSTEM PERFORMANCE	FAILURE EFFECT ON SYSTEM OPERATION OR PERSONNEL SAFETY	CRIT CAT
MHVFD	ADJUSTABLE FREQUENCY DRIVE, HOIST	PROVIDES FINE ADJUSTMENT OF HOIST MOTOR DRIVE SPEED PLC MONITORS ALL HOIST FUNCTIONS AND WILL TERMINATE POWER TO THE HOIST SYSTEM UPON A VIOLATION OF PRESET CONDITIONS	A1. FAILS TO FUNCTION B1. INTERNAL CIRCUIT FAILURE	HOIST SYSTEM INOPERATIVE	DELAY FOR SYSTEM REPAIR	3
			A2 ERRONEOUS OUTPUT B2 INTERNAL CIRCUIT FAILURE	HOIST SPEED MAY BE HIGHER/LOWER THAN COMMANDED. PLC WILL SENSE DIFFERENCE BETWEEN ACTUAL AND COMMAND LEVEL AND FAULT THE HOIST SYSTEM	DELAY FOR SYSTEM REPAIR	3
	ENCODER, HOIST MOTOR	PROVIDES HOIST MOTOR PERFORMANCE DATA TO THE ADJUSTABLE FREQUENCY DRIVE.	A1. NO OUTPUT B1. INTERNAL PART FAILURE	HOIST ADJUSTABLE FREQUENCY DRIVE WILL SENSE THE LOSS OF DATA AND TERMINATE HOIST OPERATIONS	DELAY FOR SYSTEM REPAIR	3
			A2. ERRONEOUS OUTPUT B2. INTERNAL CIRCUIT FAILURE	HOIST PLC WILL SENSE A DIFFERENCE BETWEEN COMMAND AND ACTUAL AND TERMINATE OPERATIONS AND APPLY ALL SYSTEM BRAKES.	DELAY FOR SYSTEM REPAIR	3
	LOAD CELL, SHEAVE PIN	PROVIDES LOAD ON HOOK READ OUTS	A1. READS HIGH B1. INTERNAL PART FAILURE	MAY TRIP HOIST SYSTEM FOR OVERWEIGHT CONDITION	DELAY FOR SYSTEM REPAIR	3
			A2. 1 CELL READS LOW B2. INTERNAL PART FAILURE	NO EFFECT, REMAING CELL WILL TRIP HOIST SYSTEM IF OVERWEIGHT CONDITION EXISTS	DELAY FOR SYSTEM REPAIR	3

FAILURE MODES AND EFFECTS ANALYSIS (FMEA) WORKSHEET

System: 105/10-TON BRIDGE CRANE, OYSTER CREEK

Subsystem: AUX.HOIST DRIVE SYSTEM ELECTRICAL

Drawing No.: DRAWING D-17044-804

PROGRAM

105/10-TON BRIDGE CRANE
OYSTER CREEK

Page 1 of 3 Date: 09/28/2000

FIND NO.	PART NAME	PART FUNCTION	A. FAILURE MODE B. CAUSE	FAILURE EFFECT ON SYSTEM PERFORMANCE	FAILURE EFFECT ON SYSTEM OPERATION OR PERSONNEL SAFETY	CRIT CAT
286TC	MOTOR, AUX HOIST, 20 HP	PROVIDES MOTIVE FORCE REQUIRED TO OPERATE AUX. HOIST SYSTEM	A1. FAILS TO OPERATE B1. DEFECTIVE WINDINGS	AUX. HOIST SYSTEM INOPERATIVE. PLC WILL SENSE LOSS AND MAINTAIN MOTOR BRAKE IN ENGAGED POSITION	DELAY FOR SYSTEM REPAIR	3
			A2. FAILS DURING OPERATION B2. DEFECTIVE WINDINGS	AUX. HOIST SYSTEM INOPERATIVE. PLC WILL SENSE LOSS AND ENGAGED MOTOR BRAKE AND EMERGENCY BRAKE	DELAY FOR SYSTEM REPAIR	3
AHLR	LINE REACTOR, 460 VAC	PROVIDES LINE VOLTAGE BUFFERING OF INBOUND POWER TO THE AUX. HOIST DRIVE SYSTEM	A1. FAILS OPEN B1. INTERNAL PART FAILURE	AUX. HOIST DRIVE SYSTEM INOPERATIVE.	DELAY FOR SYSTEM REPAIR	3
			A2. FAILS TO BUFFER VOLTAGE B2. INTERNAL PART FAILURE	POSSIBLE DAMAGE TO AUX. HOIST DRIVE SYSTEM COMPONENTS DUE TO VOLTAGE SPIKES.	DELAY FOR SYSTEM REPAIR	3
DB	BRAKE, DYNAMIC	PROVIDES LOAD CONTROL USING DYNAMIC BRAKING WHILE LOAD IS MOVING DOWNWARD	A1. RESISTORS FAIL OPEN B1. STRUCTURAL FAILURE	LOSS OF DYNAMIC BRAKING, LOAD WILL NOT DECEND SMOOTHLY. AUX. HOIST MOTOR WILL MAINTAIN CONTROL OF LOAD. AFD WILL SENSE DB LOSS.	DELAY FOR SYSTEM REPAIR	3
			A2. MODULE FAULT B2. INTERNAL PART FAILURE	LOSS OF DYNAMIC BRAKING, LOAD WILL NOT DECEND SMOOTHLY. AUX. HOIST MOTOR WILL MAINTAIN CONTROL OF LOAD. AFD WILL SENSE DB LOSS.	DELAY FOR SYSTEM REPAIR	3

10/10/01 16:42:41

FAILURE MODES AND EFFECTS ANALYSIS (FMEA) WORKSHEET

System: 105/10-TON BRIDGE CRANE, OYSTER CREEK
Subsystem: AUX.HOIST DRIVE SYSTEM ELECTRICAL
Drawing No.: DRAWING D-17044-804

PROGRAM
105/10-TON BRIDGE CRANE
OYSTER CREEK

Page 2 of 3 Date: 09/28/2000

FIND NO.	PART NAME	PART FUNCTION	A. FAILURE MODE B. CAUSE	FAILURE EFFECT ON SYSTEM PERFORMANCE	FAILURE EFFECT ON SYSTEM OPERATION OR PERSONNEL SAFETY	CRIT CAT
AHVFD	VARIABLE FREQUENCY DRIVE, HOIST	PROVIDES FINE ADJUSTMENT OF AUX. HOIST MOTOR DRIVE SPEED AND MONITORS ALL AUX. HOIST FUNCTIONS AND WILL TERMINATE POWER TO THE AUX. HOIST SYSTEM UPON A VIOLATION OF PRESET CONDITIONS	A1. FAILS TO FUNCTION B1 INTERNAL CIRCUIT FAILURE	AUX. HOIST SYSTEM INOPERATIVE	DELAY FOR SYSTEM REPAIR	3
			A2 ERRONEOUS OUTPUT B2 INTERNAL CIRCUIT FAILURE	AUX. HOIST SPEED MAY BE HIGHER/LOWER THAN COMMANDED VFD WILL SENSE DIFFERENCE BETWEEN COMMAND AND ENCODER AND FAULT THE AUX. HOIST SYSTEM	DELAY FOR SYSTEM REPAIR	3
NONE	ENCODER, HOIST MOTOR	PROVIDES AUX. HOIST MOTOR PERFORMANCE DATA TO THE ADJUSTABLE FREQUENCY DRIVE.	A1. NO OUTPUT B1 INTERNAL PART FAILURE	AUX. HOIST ADJUSTABLE FREQUENCY DRIVE WILL SENSE THE LOSS OF DATA AND TERMINATE AUX. HOIST OPERATIONS	DELAY FOR SYSTEM REPAIR	3
			A2. ERRONEOUS OUTPUT B2 INTERNAL CIRCUIT FAILURE	AUX. HOIST AFD WILL SENSE A DIFFERENCE BETWEEN COMMAND AND ACTUAL AND TERMINATE OPERATIONS AND APPLY ALL SYSTEM BRAKES.	DELAY FOR SYSTEM REPAIR	3
NONE	LOAD CELL SHEAVE PIN	PROVIDES LOAD ON HOOK READ OUTS	A1 READS HIGH B1 INTERNAL PART FAILURE	MAY TRIP AUX. HOIST SYSTEM FOR OVERWEIGHT CONDITION	DELAY FOR SYSTEM REPAIR	3
			A2 1 CELL READS LOW B2 INTERNAL PART FAILURE	NO EFFECT, REMAINING CELL WILL TRIP AUX. HOIST SYSTEM IF OVERWEIGHT CONDITION EXISTS	DELAY FOR SYSTEM REPAIR	3

FAILURE MODES AND EFFECTS ANALYSIS (FMEA) WORKSHEET

System: 105/10-TON BRIDGE CRANE, OYSTER CREEK

Subsystem: AUX.HOIST DRIVE SYSTEM ELECTRICAL

Drawing No.: DRAWING D-17044-804

PROGRAM

105/10-TON BRIDGE CRANE
OYSTER CREEK

Page 3 of 3 Date: 09/28/2000

FIND NO.	PART NAME	PART FUNCTION	A. FAILURE MODE B. CAUSE	FAILURE EFFECT ON SYSTEM PERFORMANCE	FAILURE EFFECT ON SYSTEM OPERATION OR PERSONNEL SAFETY	CRIT CAT
WTS	CONTACTOR	PROVIDES THE ABILITY TO ZERO THE LOAD CELL SCALE.	A1. COIL FAILS OPEN B1. DEFECTIVE COIL	LOSS OF ABILITY TO ZERO THE LOAD CELL SCALE	DELAY FOR SYSTEM REPAIR	3
			A2. CONTACTS FAIL OPEN B2. BROKEN CONTACT LEAF	LOSS OF ABILITY TO ZERO THE LOAD CELL SCALE	DELAY FOR SYSTEM REPAIR	3
			A3 CONTACTS FAIL CLOSED B3. WELDED CONTACTS	LOAD CELL SCALE INOPERATIVE.	DELAY FOR SYSTEM REPAIR	3

10/10/01 16:42:41

FAILURE MODES AND EFFECTS ANALYSIS (FMEA) WORKSHEET

System: 105/10-TON BRIDGE CRANE, OYSTER CREEK

Subsystem: AUX.HOIST CONTROL CIRCUIT

Drawing No.: DRAWING D-18408-806-808

PROGRAM

OYSTER CREEK 105/10 TON TROLLEY REPLACEMENT

Page 1 of 15 Date: 9/29/2000

PART NO.	PART NAME	PART FUNCTION	A. FAILURE MODE B. CAUSE	FAILURE EFFECT ON SYSTEM PERFORMANCE	FAILURE EFFECT ON SYSTEM OPERATION OR PERSONNEL SAFETY	CRIT CAT
AHRIM	JOYSTICK, AUX HOIST UP	PROVIDES THE OPERATOR THE ABILITY TO SELECT AUX. HOIST DIRECTION OF TRAVEL AND VARY AUX. HOIST SPEED WITHIN SELECTED SPEED MODE. JOYSTICK IN CENTERED POSITION COMMANDS ALL STOP..	A1. FAILS TO OPERATE B1 DEFECTIVE VARISTOR	LOSS OF ABILITY TO COMMAND AUX. HOIST IN THE UP DIRECTION OF TRAVEL.	DELAY FOR SYSTEM REPAIR	3
			A2 FAILS FROZEN B2 CORROSION	AUX. HOIST WILL CONTINUE TO MOVE, OPERATOR UNABLE USING JOYSTICK TO COMMAND ALL STOP. AUX. HOIST CAN BE STOPPED USING STOP PUSH BUTTON WHICH OPENS MAIN LINE CONTACTOR TERMINATING FACILITY POWER TO CRANE. REQUIRES MULTIPLE FAILURES TO BECOME CRITICAL.	DELAY FOR SYSTEM REPAIR	3
	JOYSTICK, AUX HOIST DOWN	PROVIDES THE ABILITY TO SELECT DIRECTION AND SPEED OF TRAVEL OF AUX HOIST.	A1 FAILS TO OPERATE B1 DEFECTIVE VARISTOR	LOSS OF ABILITY TO COMMAND AUX HOIST IN THE DOWN DIRECTION OF TRAVEL	DELAY FOR SYSTEM REPAIR	3
			A2. FAILS FROZEN B2 CORROSION	AUX. HOIST WILL CONTINUE TO MOVE, OPERATOR UNABLE USING JOYSTICK TO COMMAND ALL STOP .AUX. HOIST CAN BE STOPPED USING STOP PUSH BUTTON WHICH OPENS MAIN LINE CONTACTOR TERMINATING FACILITY POWER TO CRANE. REQUIRES MULTIPLE FAILURES TO BECOME CRITICAL.	DELAY FOR SYSTEM REPAIR	3

FAILURE MODES AND EFFECTS ANALYSIS (FMEA) WORKSHEET

System: 105/10-TON BRIDGE CRANE, OYSTER CREEK
Subsystem: AUX.HOIST CONTROL CIRCUIT
Drawing No.: DRAWING D-18408-806-808

PROGRAM
OYSTER CREEK 105/10 TON TROLLEY REPLACEMENT

Page 2 of 15 Date: 9/29/2000

PART NO.	PART NAME	PART FUNCTION	A. FAILURE MODE B. CAUSE	FAILURE EFFECT ON SYSTEM PERFORMANCE	FAILURE EFFECT ON SYSTEM OPERATION OR PERSONNEL SAFETY	CRIT CAT
KSW4	SWITCH, KEY OPERATED	PROVIDES THE ABILITY TO RE-ENERGIZE AUX. HOIST SYSTEM AFTER THE EQUALIZER LIMIT SWITCH OPENS.	A1. FAILS OPEN B1. BROKEN CONTACTS	LOSS OF ABILITY TO RE-ENERGIZE AUX. HOIST SYSTEM AFTER EQUALIZER SHUT DOWN	DELAY FOR SYSTEM REPAIR	3
			A2. FAILS CLOSED B2. WELDED CONTACTS	LOSS OF EQUALIZER PROTECTION CIRCUIT. REQUIRES MULTIPLE FAILURES PRIOR TO BECOMING CRITICAL	DELAY FOR SYSTEM REPAIR	3
KSW3	SWITCH, KEY OPERATED	PROVIDES THE ABILITY TO RE-ENERGIZE AUX. HOIST SYSTEM AFTER THE WIRE ROPE MIS-SPOOLING LIMIT SWITCH OPENS.	A1. FAILS OPEN B1. BROKEN CONTACTS	LOSS OF ABILITY TO RE-ENERGIZE AUX. HOIST SYSTEM AFTER WIRE ROPE MIS-SPOOLING LIMIT SWITCH SHUT DOWN	DELAY FOR SYSTEM REPAIR	3
			A2. FAILS CLOSED B2. WELDED CONTACTS	LOSS OF WIRE ROPE MIS-SPOOLING PROTECTION CIRCUIT. REQUIRES MULTIPLE FAILURES PRIOR TO BECOMING CRITICAL.	DELAY FOR SYSTEM REPAIR	3
AHTLS	LIMIT SWITCH, GEARED	PROVIDES PRIMARY OVERTRAVEL LIMIT PROTECTION TO THE AUX. HOIST IN BOTH THE UP/DOWN DIRECTION OF TRAVEL	A1. FAILS OPEN B1. BROKEN CONTACTS	AUX. HOIST SYSTEM INOPERATIVE IN THE UP DIRECTION OF TRAVEL AUX. HOIST WILL OPERATE IN THE DOWN DIRECTION OF TRAVEL	DELAY FOR SYSTEM REPAIR	3
			A2. FAILS CLOSED B2. WELDED CONTACTS	LOSS OF PRIMARY OVERTRAVEL PROTECTION IN THE UP DIRECTION OF TRAVEL WEIGHTED LIMIT SWITCH WILL STOP AUX. HOIST PRIOR TO CONTACT WITH TROLLEY REQUIRES MULTIPLE FAILURE	DELAY FOR SYSTEM REPAIR	3

10/10/01 16:42:41

FAILURE MODES AND EFFECTS ANALYSIS (FMEA) WORKSHEET

System: 105/10-TON BRIDGE CRANE, OYSTER CREEK

Subsystem: AUX.HOIST CONTROL CIRCUIT

Drawing No.: DRAWING D-18408-806-808

PROGRAM

OYSTER CREEK 105/10 TON TROLLEY REPLACEMENT

 Date: 9/29/2000

PART NO.	PART NAME	PART FUNCTION	A. FAILURE MODE B. CAUSE	FAILURE EFFECT ON SYSTEM PERFORMANCE	FAILURE EFFECT ON SYSTEM OPERATION OR PERSONNEL SAFETY	CRIT CAT
AHWLS (AHULS)	LIMIT SWITCH, WEIGHTED, UP DIRECTION OF TRAVEL	PROVIDES OVERTRAVEL LIMIT PROTECTION TO THE AUX. HOIST.	A1. FAILS OPEN B1. BROKEN CONTACTS	AUX. HOIST SYSTEM INOPERATIVE IN THE UP DIRECTION OF TRAVEL	DELAY FOR SYSTEM REPAIR	3
			A2. FAILS CLOSED B2 WELDED CONTACTS	LOSS OF OVERTRAVEL PROTECTION IN THE UP DIRECTION OF TRAVEL. GEARED LIMIT SWITCH WILL STOP AUX. HOIST PRIOR TO CONTACT WITH WEIGHTED LIMIT SWITCH. REQUIRES MULTIPLE FAILURE	DELAY FOR SYSTEM REPAIR	3
AHWLS (AHDLS)	LIMIT SWITCH, WEIGHTED, DOWN DIRECTION OF TRAVEL	PROVIDES OVERTRAVEL LIMIT PROTECTION TO THE AUX HOIST.	A1 FAILS OPEN B1. BROKEN CONTACTS	AUX. HOIST SYSTEM INOPERATIVE IN THE DOWN DIRECTION OF TRAVEL	DELAY FOR SYSTEM REPAIR	3
			A2. FAILS CLOSED B2. WELDED CONTACTS	LOSS OF OVERTRAVEL PROTECTION IN THE DOWN DIRECTION OF TRAVEL. OPERATOR CAN STOP AUX. HOIST TRAVEL BY RELEASING JOYSTICK OR USING THE STOP BUTTON. REQUIRES MULTIPLE FAILURE	DELAY FOR SYSTEM REPAIR	3
AHTP	OVERLOAD, THERMAL	PROVIDES AUX. HOIST THERMAL OVERLOAD PROTECTION.	A1. FAILS OPEN PREMATURELY B1 BROKEN CONTACT LEVER	AUX. HOIST SYSTEM INOPERATIVE.	DELAY FOR SYSTEM REPAIR	3
			A2. FAILS CLOSED B2. WELDED SWITCH/DEFECTIVE MATERIAL	LOSS OF THERMAL OVERLOAD PROTECTION, POSSIBLE DAMAGE TO AUX. HOIST MOTOR.	DELAY FOR SYSTEM REPAIR	3

10/10/01 16:42:41

FAILURE MODES AND EFFECTS ANALYSIS (FMEA) WORKSHEET

System: 105/10-TON BRIDGE CRANE, OYSTER CREEK

Subsystem: AUX.HOIST CONTROL CIRCUIT

Drawing No.: DRAWING D-18408-806-808

PROGRAM

OYSTER CREEK 105/10 TON TROLLEY REPLACEMENT

 Date: 9/29/2000

PART NO.	PART NAME	PART FUNCTION	A. FAILURE MODE B. CAUSE	FAILURE EFFECT ON SYSTEM PERFORMANCE	FAILURE EFFECT ON SYSTEM OPERATION OR PERSONNEL SAFETY	CRIT CAT
R15	CONTACTOR, 1 SET N.O CONTACTS	PROVIDES ABILITY TO ENERGIZE AUX. HOIST DISC BRAKES COILS WHICH RELEASES BRAKES.	A1. COIL FAILS OPEN B1. DEFECTIVE COIL	AUX. HOIST SYSTEM INOPERATIVE IN UP DIRECTION OF TRAVEL	DELAY FOR SYSTEM REPAIR	3
			A2. COIL FAILS SHORTED B2. DEFECTIVE COIL	AUX. HOIST SYSTEM INOPERATIVE INOPERATIVE IN UP DIRECTION OF TRAVEL.	DELAY FOR SYSTEM REPAIR	3
			A3. CONTACTS FAIL OPEN B3. BROKEN CONTACT LEAF	AUX. HOIST SYSTEM INOPERATIVE INOPERATIVE IN UP DIRECTION OF TRAVEL	DELAY FOR SYSTEM REPAIR	3
			A4. CONTACTS FAIL CLOSED B4 WELDED CONTACTS	LOSS OF ABILITY TO SET DRUM BRAKES DURING NORMAL STOP COMMAND AUX. HOIST DRUM OVERSPEED WILL SENSE OVERSPEED AND TERMINATE MAIN LINE CONTACTOR WHICH WILL SET BRAKES. REQUIRES MULTIPLE FAILURES.	DELAY FOR SYSTEM REPAIR	3
R16	CONTACTOR, 1 SET N.O. CONTACTS	PROVIDES ABILITY TO ENERGIZE AUX. HOIST DISC BRAKES COILS WHICH RELEASES BRAKES.	A1. COIL FAILS OPEN B1. DEFECTIVE COIL	AUX. HOIST SYSTEM INOPERATIVE IN DOWN DIRECTION OF TRAVEL	DELAY FOR SYSTEM REPAIR	3
			A2 COIL FAILS SHORTED B2. DEFECTIVE COIL	AUX. HOIST SYSTEM INOPERATIVE IN DOWN DIRECTION OF TRAVEL	DELAY FOR SYSTEM REPAIR	3
			A3. CONTACTS FAIL OPEN B3. BROKEN CONTACT LEAF	AUX. HOIST SYSTEM INOPERATIVE IN THE DOWN DIRECTION OF TRAVEL	DELAY FOR SYSTEM REPAIR	3

10/10/01 16:42:41

FAILURE MODES AND EFFECTS ANALYSIS (FMEA) WORKSHEET

System: 105/10-TON BRIDGE CRANE, OYSTER CREEK

Subsystem: AUX.HOIST CONTROL CIRCUIT

Drawing No.: DRAWING D-18408-806-808

PROGRAM

OYSTER CREEK 105/10 TON TROLLEY REPLACEMENT

 Date: 9/29/2000

PART NO.	PART NAME	PART FUNCTION	A. FAILURE MODE B. CAUSE	FAILURE EFFECT ON SYSTEM PERFORMANCE	FAILURE EFFECT ON SYSTEM OPERATION OR PERSONNEL SAFETY	CRIT CAT
R16 (CONT)	CONTACTOR, 1 SET N.O CONTACTS		A4. CONTACTS FAIL CLOSED B4. WELDED CONTACTS	LOSS OF ABILITY TO SET DRUM BRAKES DURING NORMAL STOP COMMAND AUX. HOIST DRUM OVERSPEED WILL SENSE OVERSPEED AND TERMINATE MAIN LINE CONTACTOR WHICH WILL SET BRAKES. REQUIRES MULTIPLE FAILURES.	DELAY FOR SYSTEM REPAIR	3
AHBR1	RECTIFIER, BRIDGE	PROVIDES CONSTANT VOLTAGE TO THE CRANE SYSTEM PROGRAMMABLE LOGIC CONTROLLER (PLC)	A1 FAILS OPEN B1 OPEN DIODE	LOSS OF POWER TO PLC, CRANE SYSTEM INOPERATIVE	DELAY FOR SYSTEM REPAIR	3
AHPLS	COIL, 1 N.C CONTACT	WHEN DE-ENERGIZED OPEN CONTACTS WHICH TERMINATES 120 VAC SIGNAL TO PLC AND TERMINATES HOIST SYSTEM OPERATION	A1 COIL FAILS OPEN B1 DEFECTIVE COIL	AUX. HOIST SYSTEM INOPERATIVE. AUX. HOIST BRAKES WILL SET AND HOLD LOAD.	DELAY FOR SYSTEM REPAIR	3
			A2. COIL FAILS SHORTED B2 DEFECTIVE COIL	AUX. HOIST SYSTEM INOPERATIVE. AUX. HOIST BRAKES WILL SET AND HOLD LOAD.	DELAY FOR SYSTEM REPAIR	3
			A3. CONTACT FAIL OPEN B3. BROKEN CONTACT LEAF	AUX. HOIST SYSTEM INOPERATIVE. AUX. HOIST BRAKES WILL SET AND HOLD LOAD.	DELAY FOR SYSTEM REPAIR	3
			A4 CONTACT FAILS CLOSED B4 WELDED CONTACT	NO EFFECT ON NORMAL OPERATION, LINE CS5 CIRCUIT BREAKER WILL PROTECT SYSTEM FROM OVERLOAD AND OPEN TERMINATING AUX. HOIST OPERATION IF REQUIRED. REQUIRES MULTIPLE FAILURES.	DELAY FOR SYSTEM REPAIR	3

10/10/01 16:42:41

FAILURE MODES AND EFFECTS ANALYSIS (FMEA) WORKSHEET

System: 105/10-TON BRIDGE CRANE, OYSTER CREEK

Subsystem: AUX.HOIST CONTROL CIRCUIT

Drawing No.: DRAWING D-18408-806-808

PROGRAM

OYSTER CREEK 105/10 TON TROLLEY REPLACEMENT

 Date: 9/29/2000

PART NO.	PART NAME	PART FUNCTION	A. FAILURE MODE B. CAUSE	FAILURE EFFECT ON SYSTEM PERFORMANCE	FAILURE EFFECT ON SYSTEM OPERATION OR PERSONNEL SAFETY	CRIT CAT
AHLLS	SWITCH, LOWER LIMIT	PROVIDES REDUNDANT METHOD TO PREVENT OVERTRAVEL IN THE DOWN DIRECTION OF TRAVEL	A1. FAILS OPEN B1. BROKEN CONTACT LEAF	TERMINATES 120 VAC SIGNAL TO PLC TERMINATING AUX. HOIST OPERATIONS IN THE DOWN DIRECTION OF TRAVEL.	DELAY FOR SYSTEM REPAIR	3
			A2. FAILS CLOSED B2. WELDED CONTACTS	LOSS OF OVERTRAVEL LIMIT PROTECTION. GEARED LIMIT SWITCH IS THE PRIMARY DOWN LIMIT PROTECTION AND WILL STOP AUX. HOIST MOTION. REQUIRES MULTIPLE FAILURES.	DELAY FOR SYSTEM REPAIR	3
AHBC1	CONTACTOR, 1 N.O. CONTACT, 2 N.C CONTACTS	PROVIDES THE ABILITY TO CLOSE CONTACT AHBC1 WHICH ENERGIZING BRAKE COIL AND RELEASING DRUM BRAKES. WHEN ENERGIZED OPENS CONTACTS WHICH DISABLE BOTH TROLLEY AND BRIDGE MOTION.	A1. COIL FAILS OPEN B1 DEFECTIVE COIL	AUX. HOIST DRUM BRAKE WILL REMAIN ENGAGED. AUX. HOIST SYSTEM INOPERATIVE.	DELAY FOR SYSTEM REPAIR	3
			A2. COIL FAILS SHORTED B2. DEFECTIVE COIL	AUX. HOIST DRUM BRAKE WILL REMAIN ENGAGED. AUX. HOIST SYSTEM INOPERATIVE.	DELAY FOR SYSTEM REPAIR	3
			A3. CONTACT FAIL OPEN B3 BROKEN CONTACT LEAF	AUX. HOIST DRUM BRAKE WILL REMAIN ENGAGED. AUX. HOIST SYSTEM INOPERATIVE. TROLLEY AND BRIDGE SYSTEM INOPERATIVE	DELAY FOR SYSTEM REPAIR	3

FAILURE MODES AND EFFECTS ANALYSIS (FMEA) WORKSHEET

System: 105/10-TON BRIDGE CRANE, OYSTER CREEK

Subsystem: AUX.HOIST CONTROL CIRCUIT

Drawing No.: DRAWING D-18408-806-808

PROGRAM

OYSTER CREEK 105/10 TON TROLLEY REPLACEMENT

Page 7 of 15 Date: 9/29/2000

PART NO.	PART NAME	PART FUNCTION	A. FAILURE MODE B. CAUSE	FAILURE EFFECT ON SYSTEM PERFORMANCE	FAILURE EFFECT ON SYSTEM OPERATION OR PERSONNEL SAFETY	CRIT CAT
AHBC1 (CONT)	CONTACTOR, 1 N.O. CONTACT, 2 N.C. CONTACTS		A4. CONTACT FAILS CLOSED B4. WELDED CONTACT	LOSS OF ABILITY TO ENGAGE AUX. HOIST DISC BRAKES WHEN STOP COMMAND IS ISSUED. PLC WILL SENSE A DIFFERENCE BETWEEN COMMAND LEVEL AND ACTUAL CONDITION AND TERMINATE MAIN LINE CONTACTOR WHICH WILL SET ALL BRAKES. REQUIRES MULTIPLE FAILURES	DELAY FOR SYSTEM REPAIR	3
R17	CONTACTOR, 1 N.O. CONTACT	WHEN DE-ENERGIZED PROVIDES THE ABILITY TO ENERGIZE RED WARNING LIGHT INDICATING AUX. HOIST BRAKE FAULT AND TERMINATES HOIST SYSTEM OPERATION.	A1. COIL FAILS OPEN B1. DEFECTIVE COIL	LOSS OF VISUAL WARNING OF AUX. HOIST BRAKE FAULT. PLC WILL SENSE BRAKE FAULT AND TERMINATE ALL AUX. HOIST OPERATIONS.	DELAY FOR SYSTEM REPAIR	3
			A2. COIL FAILS SHORTED B2. DEFECTIVE COIL	LOSS OF VISUAL WARNING OF AUX. HOIST BRAKE FAULT. PLC WILL SENSE BRAKE FAULT AND TERMINATE ALL AUX. HOIST OPERATIONS.	DELAY FOR SYSTEM REPAIR	3
			A3. CONTACT FAIL OPEN B3. BROKEN CONTACT LEAF	LOSS OF VISUAL WARNING OF AUX. HOIST BRAKE FAULT. PLC WILL SENSE BRAKE FAULT AND TERMINATE ALL AUX. HOIST OPERATIONS.	DELAY FOR SYSTEM REPAIR	3
R17 (CONT)	CONTACTOR, 1 N.O. CONTACT		A4. CONTACT FAILS CLOSED B4. WELDED CONTACT	LOSS OF VISUAL WARNING OF AUX. HOIST BRAKE FAULT. PLC WILL SENSE DIFFERENCE BETWEEN COMMAND LEVEL AND PLC FEED BACK AND TERMINATE AUX. HOIST OPERATIONS. STOP BUTTON IS ALSO AVAILABLE TO STOP CRANE MOTION. REQUIRES MULTIPLE FAILURES.	DELAY FOR SYSTEM REPAIR	3

FAILURE MODES AND EFFECTS ANALYSIS (FMEA) WORKSHEET

System: 105/10-TON BRIDGE CRANE, OYSTER CREEK

Subsystem: AUX.HOIST CONTROL CIRCUIT

Drawing No.: DRAWING D-18408-806-808

PROGRAM

OYSTER CREEK 105/10 TON TROLLEY REPLACEMENT

 Date: 9/29/2000

PART NO.	PART NAME	PART FUNCTION	A. FAILURE MODE B. CAUSE	FAILURE EFFECT ON SYSTEM PERFORMANCE	FAILURE EFFECT ON SYSTEM OPERATION OR PERSONNEL SAFETY	CRIT CAT
R18	CONTACTOR, 1 N.O. CONTACT	WHEN DE-ENERGIZED PROVIDES THE ABILITY TO ENERGIZE WARNING LIGHT INDICATING AUX. HOIST PLC FAULT AND TERMINATES HOIST OPERATION.	A1. COIL FAILS OPEN B1. DEFECTIVE COIL	LOSS OF VISUAL WARNING OF AUX. HOIST PLC FAULT LOSS OF PLC WILL SENSE FAULT AND TERMINATE ALL AUX HOIST OPERATIONS.	DELAY FOR SYSTEM REPAIR	3
R18	CONTACTOR, 1 N.O. CONTACT		A2. COIL FAILS SHORTED B2. DEFECTIVE COIL	LOSS OF VISUAL WARNING OF AUX. HOIST PLC FAULT. AFD WILL SENSE FAULT AND TERMINATE ALL AUX HOIST OPERATIONS.	DELAY FOR SYSTEM REPAIR	3
			A3. CONTACT FAIL OPEN B3. BROKEN CONTACT LEAF	LOSS OF VISUAL WARNING OF AUX. HOIST AFD FAULT PLC WILL SENSE FAULT AND TERMINATE ALL AUX HOIST OPERATIONS.	DELAY FOR SYSTEM REPAIR	3
			A4 CONTACT FAILS CLOSED B4 WELDED CONTACT	LOSS OF VISUAL WARNING OF GENERAL AFD FAULT. PLC WILL SENSE DIFFERENCE BETWEEN COMMAND LEVEL AND ENCODER FEED BACK AND TERMINATE AUX. HOIST OPERATIONS. STOP BUTTON IS ALSO AVAILABLE TO STOP CRANE MOTION. REQUIRES MULTIPLE FAILURES	DELAY FOR SYSTEM REPAIR	3
R19	CONTACTOR, 1 N.O. CONTACT	PROVIDES THE ABILITY TO ENGAGE "CRITICAL LOAD" SYSTEM THAT DISABLES HOIST SYSTEMS ABILITY TO OPERATE ABOVE 60 HERTZ (FASTER THAN NORMAL) AND ENERGIZES HOIST OVERSPEED SYSTEM	A1. COIL FAILS OPEN B1. DEFECTIVE COIL	LOSS OF ABILITY TO ENGAGE CRITICAL LOAD OPERATIONAL LIMITS	DELAY FOR SYSTEM REPAIR	3
			A2. COIL FAILS SHORTED B2. DEFECTIVE COIL	LOSS OF ABILITY TO ENGAGE CRITICAL LOAD OPERATIONAL LIMITS.	DELAY FOR SYSTEM REPAIR	3

10/10/01 16:42:41

SEPTEMBER 2000

FAILURE MODES AND EFFECTS ANALYSIS (FMEA) WORKSHEET

System: 105/10-TON BRIDGE CRANE, OYSTER CREEK

Subsystem: AUX.HOIST CONTROL CIRCUIT

Drawing No.: DRAWING D-18408-806-808

PROGRAM

OYSTER CREEK 105/10 TON TROLLEY REPLACEMENT

 Date: 9/29/2000

PART NO.	PART NAME	PART FUNCTION	A. FAILURE MODE B. CAUSE	FAILURE EFFECT ON SYSTEM PERFORMANCE	FAILURE EFFECT ON SYSTEM OPERATION OR PERSONNEL SAFETY	CRIT CAT
			A3. CONTACT FAIL OPEN B3. BROKEN CONTACT LEAF	LOSS OF ABILITY TO ENGAGE CRITICAL LOAD OPERATIONAL LIMITS.	DELAY FOR SYSTEM REPAIR	3
			A4. CONTACT FAILS CLOSED B4. WELDED CONTACT	LOSS OF ABILITY TO ENERGIZE AUX. HOIST OVERSPEED SYSTEM, REQUIRES MULTIPLE FAILURES	DELAY FOR SYSTEM REPAIR	3
AHRLS-1, AHRLS-2	SWITCH, LIMIT, WIRE ROPE MIS-SPOOLING	PROVIDES ABILITY TO TERMINATE AUX. HOIST OPERATION IF MIS-SPOOLING CONDITION OCCURS.	A1. 1 SWITCH FAILS OPEN B1. BROKEN CONTACT LEAF	AUX. HOIST PLC WILL SENSE A MIS-SPOOLING CONDITION AND TERMINATE OPERATIONS AND APPLY AUX. HOIST BRAKES.	DELAY FOR SYSTEM REPAIR	3
			A2. 1 SWITCH FAILS CLOSED B2. WELDED CONTACT	NO EFFECT, REDUNDANT SWITCH WILL TERMINATE AUX. HOIST OPERATION	DELAY FOR SYSTEM REPAIR	3
R20	CONTACTOR, 2 N.C AND 1 N.O CONTACTS	PROVIDES ABILITY TO DE-ENERGIZE AUX. HOIST SYSTEM IF A WIRE ROPE MIS-SPOOLING IS DETECTED.	A1. COIL FAILS OPEN B1. DEFECTIVE COIL	AUX. HOIST SYSTEM INOPERATIVE, ALL BRAKES WILL REMAIN SET.	DELAY FOR SYSTEM REPAIR	3
			A2. COIL FAILS SHORTED B2. DEFECTIVE COIL	AUX. HOIST SYSTEM INOPERATIVE, ALL BRAKES WILL REMAIN SET.	DELAY FOR SYSTEM REPAIR	3
			A3. N.C. CONTACTS FAIL OPEN B3. BROKEN CONTACT LEAF	AUX. HOIST SYSTEM INOPERATIVE, ALL BRAKES WILL REMAIN SET.		

FAILURE MODES AND EFFECTS ANALYSIS (FMEA) WORKSHEET

System: 105/10-TON BRIDGE CRANE, OYSTER CREEK

Subsystem: AUX.HOIST CONTROL CIRCUIT

Drawing No.: DRAWING D-18408-806-808

PROGRAM

OYSTER CREEK 105/10 TON TROLLEY REPLACEMENT

Page 10 of 15 Date: 9/29/2000

PART NO.	PART NAME	PART FUNCTION	A. FAILURE MODE B. CAUSE	FAILURE EFFECT ON SYSTEM PERFORMANCE	FAILURE EFFECT ON SYSTEM OPERATION OR PERSONNEL SAFETY	CRIT CAT
			A4. N.C. CONTACT FAILS CLOSED B4. WELDED CONTACT	AUX. HOIST PLC WILL SENSE THE MIS-SPOOLING AND TERMINATE AUX. HOIST SYSTEM OPERATIONS. REQUIRES MULTIPLE FAILURE.	DELAY FOR SYSTEM REPAIR	3
			A5. N.O. CONTACTS FAIL OPEN B5. BROKEN CONTACT LEAF	LOSS OF VISUAL WARNING LIGHT INDICATING A MIS-SPOOLING CONDITION. N.C. CONTACTS WILL OPEN AND TERMINATE AUX. HOIST SYSTEM OPERATION. REQUIRES MULTIPLE FAILURES TO BECOME CRITICAL.	DELAY FOR SYSTEM REPAIR	3
			A6. N.O. CONTACTS FAIL CLOSED B6. WELDED CONTACTS	AUX. HOIST SYSTEM INOPERATIVE.	DELAY FOR SYSTEM REPAIR	3
AHSD	SPEED DETECTOR, AUX. HOIST	PROVIDES MONITORING OF AUX. HOIST DRUM SPEED. IF PRE-SET OVERSPEED LIMIT IS EXCEEDED AUX. HOIST PLC WILL SENSE FAILURE AND TERMINATE HOIST OPERATIONS AND ENGAGE ALL SYSTEM BRAKES.	A1. FAILS OPEN B1. INTERNAL CIRCUIT FAULT	HOIST SYSTEM INOPERATIVE. ALL AUX. HOIST BRAKES WILL SET AND HOLD.	DELAY FOR SYSTEM REPAIR	3
			A2. FAILS TO DETECT OVERSPEED B2. INTERNAL CIRCUIT FAULT	AUX. HOIST MOTOR WILL SENSE A DIFFERENCE BETWEEN COMMAND LEVEL AND ACTUAL SPEED AND FAULT SYSTEM. ALL AUX. HOIST BRAKES WILL ENGAGE. REQUIRES MULTIPLE FAILURE	DELAY FOR SYSTEM REPAIR	3

10/10/01 16:42:41

FAILURE MODES AND EFFECTS ANALYSIS (FMEA) WORKSHEET

System: 105/10-TON BRIDGE CRANE, OYSTER CREEK

Subsystem: AUX.HOIST CONTROL CIRCUIT

Drawing No.: DRAWING D-18408-806-808

PROGRAM

OYSTER CREEK 105/10 TON TROLLEY REPLACEMENT

Page 11 of 15 Date: 9/29/2000

PART NO.	PART NAME	PART FUNCTION	A. FAILURE MODE B. CAUSE	FAILURE EFFECT ON SYSTEM PERFORMANCE	FAILURE EFFECT ON SYSTEM OPERATION OR PERSONNEL SAFETY	CRIT CAT
R21	CONTACTOR	PROVIDES ABILITY TO ENERGIZE AUX. HOIST DRUM OVERSPEED SYSTEM WHILE IN NON-CRITICAL LOAD LIFT MODE.	A1. COIL FAILS OPEN B1. DEFECTIVE COIL	LOSS OF OVERSPEED SYSTEM WHILE IN NON-CRITICAL LOAD LIFT MODE AUX. HOIST PLC WILL SENSE DIFFERENCE BETWEEN COMMAND LEVEL AND ACTUAL DRUM SPEED AND TERMINATE AUX. HOIST OPERATIONS. REQUIRES MULTIPLE FAILURES.	DELAY FOR SYSTEM REPAIR	3
			A2. COIL FAILS SHORTED B2 DEFECTIVE COIL	LOSS OF OVERSPEED SYSTEM WHILE IN NON-CRITICAL LOAD LIFT MODE. AUX. HOIST PLC WILL SENSE DIFFERENCE BETWEEN COMMAND LEVEL AND ACTUAL DRUM SPEED AND TERMINATE AUX. HOIST OPERATIONS. REQUIRES MULTIPLE FAILURES.	DELAY FOR SYSTEM REPAIR	3
AHEPS	SWITCH, EQUALIZER LIMIT	PROVIDES OVERTRAVEL PROTECTION AGAINST EQUALIZER TRAVEL PAST A PRE-SET LIMIT.	A1 FAILS OPEN B1. BROKEN SWITCH LEVER	AUX. HOIST SYSTEM PLC WILL SENSE FAULT AND TERMINATE AUX. HOIST SYSTEM OPERATIONS. WARNING LIGHT WILL LIGHT TO NOTIFY OPERATOR OF FAULT	DELAY FOR SYSTEM REPAIR	3
			A2 FAILS CLOSED B2 WELDED SWITCH CONTACT		DELAY FOR SYSTEM REPAIR	3
R22	CONTACTOR, 1 N.O. CONTACT, 1 N.C. CONTACT	WHEN DE-ENERGIZED PROVIDES THE ABILITY TO TERMINATE AUX. HOIST OPERATIONS IF AN EQUALIZER OVERTRAVEL HAS OCCURRED.	A1 COIL FAILS OPEN B1. DEFECTIVE COIL	HOIST PLC WILL SENSE FAULT AUX. HOIST SYSTEM INOPERATIVE, ALL BRAKES WILL REMAIN ENGAGED	DELAY FOR SYSTEM REPAIR	3
			A2. COIL FAILS SHORTED B2 DEFECTIVE COIL	HOIST PLC WILL SENSE FAULT AUX. HOIST SYSTEM INOPERATIVE, ALL BRAKES WILL REMAIN ENGAGED	DELAY FOR SYSTEM REPAIR	3

10/10/01 16:42:41

SEPTEMBER 2000

FAILURE MODES AND EFFECTS ANALYSIS (FMEA) WORKSHEET

System: 105/10-TON BRIDGE CRANE, OYSTER CREEK

Subsystem: AUX.HOIST CONTROL CIRCUIT

Drawing No.: DRAWING D-18408-806-808

PROGRAM

OYSTER CREEK 105/10 TON TROLLEY REPLACEMENT

 Date: 9/29/2000

PART NO.	PART NAME	PART FUNCTION	A. FAILURE MODE B. CAUSE	FAILURE EFFECT ON SYSTEM PERFORMANCE	FAILURE EFFECT ON SYSTEM OPERATION OR PERSONNEL SAFETY	CRIT CAT
			A3. N.C. CONTACTS FAIL OPEN B3. BROKEN CONTACT LEAF	HOIST SYSTEM INOPERATIVE IN THE UP DIRECTION OF TRAVEL	DELAY FOR SYSTEM REPAIR	3
			A4. N.C. CONTACT FAILS CLOSED B4. WELDED CONTACT	AUX. HOIST PLC WILL SENSE EQUALIZER OVERTRAVEL AND TERMINATE AUX. HOIST SYSTEM OPERATION AND LIGHT WARNING LIGHT.	DELAY FOR SYSTEM REPAIR	3
			A5. N.O. CONTACTS FAIL OPEN B5. BROKEN CONTACT LEAF	LOSS OF SIGNAL FOR OVERTRAVEL TO AUX. HOIST PLC, N.C. CONTACTS WILL TERMINATE AUX. HOIST OPERATION IN THE UP DIRECTION OF TRAVEL.	DELAY FOR SYSTEM REPAIR	3
			A6. N.O. CONTACTS FAIL CLOSED B6. WELDED CONTACTS	AUX. HOIST SYSTEM INOPERATIVE	DELAY FOR SYSTEM REPAIR	3
TMR2	RELAY, TIMED SWITCH	PROVIDES TIME DELAY CLOSURE OF SWITCH TMR2 WHICH ENERGIZES AUX. HOIST BRAKE SOLENOID COILS	A1. COIL FAILS OPEN B1. DEFECTIVE COIL	AUX. HOIST SYSTEM BRAKES WILL REMAIN ENGAGED. AUX. HOIST SYSTEM INOPERATIVE.	DELAY FOR SYSTEM REPAIR	3
			A2. COIL FAILS SHORTED B2. DEFECTIVE COIL	AUX. HOIST SYSTEM BRAKES WILL REMAIN ENGAGED, AUX HOIST SYSTEM INOPERATIVE.	DELAY FOR SYSTEM REPAIR	3
			A3. SWITCH FAILS OPEN B3. BROKEN CONTACT LEAF	AUX. HOIST SYSTEM BRAKES WILL REMAIN ENGAGED, AUX HOIST SYSTEM INOPERATIVE.	DELAY FOR SYSTEM REPAIR	3

10/10/01 16:42:41

FAILURE MODES AND EFFECTS ANALYSIS (FMEA) WORKSHEET

System: 105/10-TON BRIDGE CRANE, OYSTER CREEK

Subsystem: AUX.HOIST CONTROL CIRCUIT

Drawing No.: DRAWING D-18408-806-808

PROGRAM

OYSTER CREEK 105/10 TON TROLLEY REPLACEMENT

Page 13 of 15 Date: 9/29/2000

PART NO.	PART NAME	PART FUNCTION	A. FAILURE MODE B. CAUSE	FAILURE EFFECT ON SYSTEM PERFORMANCE	FAILURE EFFECT ON SYSTEM OPERATION OR PERSONNEL SAFETY	CRIT CAT
			A4 SWITCH FAILS CLOSED B4 WELDED SWITCH CONTACT	AUX. HOIST SYSTEM BRAKES WILL NOT ENGAGE ON COMMAND OF ALL STOP. AUX. HOIST PLC WILL SENSE DIFFERENCE BETWEEN ENCODER SIGNAL AND COMMAND LEVEL AND FAULT SYSTEM. AUX. HOIST MAIN LINE CONTACTOR WILL OPEN AND DE-ENEGIZE AUX. HOIST BRAKE COILS SETTING ALL BRAKES. REQUIRES MULTIPLE FAILURES	DELAY FOR SYSTEM REPAIR	3
SV3 SV4	COILS, AUX. HOIST BRAKE	WHEN ENERGIZED PROVIDES POWER REQUIRED TO DIS-ENGAGE AUX. HOIST DISC BRAKES	A1 COIL FAILS OPEN B1. DEFECTIVE COIL	AUX. HOIST BRAKES REMAIN ENGAGED, AUX. HOIST SYSTEM INOPERATIVE.	DELAY FOR SYSTEM REPAIR	3
SV3 SV4 (CONT)	COILS, AUX HOIST BRAKE		A2 COIL FAILS SHORTED B2. DEFECTIVE COIL	AUX. HOIST BRAKES REMAIN ENGAGED, AUX. HOIST SYSTEM INOPERATIVE	DELAY FOR SYSTEM REPAIR	3
AHBLS	SWITCH, LIMIT, AUX HOIST BRAKES	WHEN CLOSED ENERGIZES COIL R23 WHICH CLOSES CONTACT R23 AND ALLOWS AUX. HOIST MOTOR OPERATION.	A1. SWITCH FAILS OPEN B1. BROKEN CONTACT LEAF	AUX. HOIST SYSTEM INOPERATIVE.	DELAY FOR SYSTEM REPAIR	3
			A2. SWITCH FAILS CLOSED B2. WELDED CONTACT	POSSIBLE DAMAGE TO AUX. HOIST MOTOR BY ATTEMPTING TO DRIVE THROUGH DISC BRAKE WHEN ENGAGED	DELAY FOR SYSTEM REPAIR	3
R23	CONTACTOR, 2 N.O. CONTACTS	WHEN ENERGIZED CLOSES CONTACTS THAT PROVIDE ABILITY TO ENERGIZE AUX HOIST MOTOR	A1 COIL FAILS OPEN B1. DEFECTIVE COIL	AUX. HOIST SYSTEM INOPERATIVE	DELAY FOR SYSTEM REPAIR	3
			A2 COIL FAILS SHORTED B2. DEFECTIVE COIL	AUX. HOIST SYSTEM INOPERATIVE	DELAY FOR SYSTEM REPAIR	3

10/10/01 16:42:41

SEPTEMBER 2000

FAILURE MODES AND EFFECTS ANALYSIS (FMEA) WORKSHEET

System: 105/10-TON BRIDGE CRANE, OYSTER CREEK

Subsystem: AUX.HOIST CONTROL CIRCUIT

Drawing No.: DRAWING D-18408-806-808

PROGRAM

OYSTER CREEK 105/10 TON TROLLEY REPLACEMENT

 Date: 9/29/2000

PART NO.	PART NAME	PART FUNCTION	A. FAILURE MODE B. CAUSE	FAILURE EFFECT ON SYSTEM PERFORMANCE	FAILURE EFFECT ON SYSTEM OPERATION OR PERSONNEL SAFETY	CRIT CAT
			A3. 1 CONTACT FAILS OPEN B3. BROKEN CONTACT LEAF	EFFECTED AUX. HOIST SYSTEM INOPERATIVE	DELAY FOR SYSTEM REPAIR	3
			A4. 1 CONTACT FAILS CLOSED B4. WELDED CONTACT	NO EFFECT ON NORMAL OPERATION.	DELAY FOR SYSTEM REPAIR	3
R24	CONTACTOR, 2 N.O. CONTACTS	WHEN ENERGIZED CLOSES CONTACTS THAT PROVIDE ABILITY TO OPERATE BOTH TROLLEY, BRIDGE AND AUX HOIST CONCURENTLY.	A1. COIL FAILS OPEN B1. DEFECTIVE COIL	LOSS OF ABILITY TO OPERATE BRIDGE AND TROLLEY WHILE HOIST IS IN USE.	DELAY FOR SYSTEM REPAIR	3
			A2. COIL FAILS SHORTED B2. DEFECTIVE COIL	LOSS OF ABILITY TO OPERATE BRIDGE AND TROLLEY WHILE HOIST IS IN USE.	DELAY FOR SYSTEM REPAIR	3
			A3. 1 CONTACT FAILS OPEN B3. BROKEN CONTACT LEAF	LOSS OF ABILITY TO OPERATE EFFECTED SYSTEM WHILE HOIST IS IN USE.	DELAY FOR SYSTEM REPAIR	3
			A4. 1 CONTACT FAILS CLOSED B4. WELDED CONTACT	LOSS OF PROTECTION OBTAINED BY OPERATING ONLY ONE CRANE SYSTEM AT A TIME.	DELAY FOR SYSTEM REPAIR	3
R24A	CONTACTOR, 2 N.O. CONTACTS	WHEN ENERGIZED CLOSES CONTACTS THAT PROVIDE ABILITY TO OPERATE BOTH TROLLEY AND MAIN HOIST CONCURENTLY.	A1. COIL FAILS OPEN B1. DEFECTIVE COIL	LOSS OF ABILITY TO OPERATE BRIDGE AND TROLLEY WHILE HOIST IS IN USE.	DELAY FOR SYSTEM REPAIR	3
			A2. COIL FAILS SHORTED B2. DEFECTIVE COIL	LOSS OF ABILITY TO OPERATE BRIDGE AND TROLLEY WHILE HOIST IS IN USE.	DELAY FOR SYSTEM REPAIR	3
			A3. 1 CONTACT FAILS OPEN B3. BROKEN CONTACT LEAF	LOSS OF ABILITY TO OPERATE EFFECTED SYSTEM WHILE HOIST IS IN USE	DELAY FOR SYSTEM REPAIR	3

10/10/01 16:42:41

SEPTEMBER 2000

FAILURE MODES AND EFFECTS ANALYSIS (FMEA) WORKSHEET

System: 105/10-TON BRIDGE CRANE, OYSTER CREEK

Subsystem: AUX.HOIST CONTROL CIRCUIT

Drawing No.: DRAWING D-18408-806-808

PROGRAM

OYSTER CREEK 105/10 TON TROLLEY REPLACEMENT

Page 15 of 15 Date: 9/29/2000

PART NO.	PART NAME	PART FUNCTION	A. FAILURE MODE B. CAUSE	FAILURE EFFECT ON SYSTEM PERFORMANCE	FAILURE EFFECT ON SYSTEM OPERATION OR PERSONNEL SAFETY	CRIT CAT
			A4. 1 CONTACT FAILS CLOSED B4. WELDED CONTACT	LOSS OF PROTECTION OBTAINED BY OPERATING ONLY ONE CRANE SYSTEM AT A TIME.	DELAY FOR SYSTEM REPAIR	3
R24B	CONTACTOR, 2 N.O. CONTACTS	WHEN ENERGIZED CLOSES CONTACTS THAT PROVIDE ABILITY TO OPERATE BOTH BRIDGE AND MAIN HOIST CONCURENTLY.	A1. COIL FAILS OPEN B1. DEFECTIVE COIL	LOSS OF ABILITY TO OPERATE BRIDGE WHILE HOIST IS IN USE	DELAY FOR SYSTEM REPAIR	3
			A2. COIL FAILS SHORTED B2. DEFECTIVE COIL	LOSS OF ABILITY TO OPERATE BRIDGE WHILE HOIST IS IN USE	DELAY FOR SYSTEM REPAIR	3
			A3. 1 CONTACT FAILS OPEN B3. BROKEN CONTACT LEAF	LOSS OF ABILITY TO OPERATE EFFECTED SYSTEM WHILE HOIST IS IN USE	DELAY FOR SYSTEM REPAIR	3
			A4. 1 CONTACT FAILS CLOSED B4. WELDED CONTACT	LOSS OF PROTECTION OBTAINED BY OPERATING ONLY ONE CRANE SYSTEM AT A TIME.	DELAY FOR SYSTEM REPAIR	3
KSW5	SWITCH, KEY OPERATED	PROVIDES THE ABILITY TO ENERGIZE R24, R24A AND R24B IN ORDER TO ALLOW OVERRIDE OF PROTECTIVE SYSTEM WHICH PREVENTS THE OPERATION OF MORE THAN ONE CRANE SYSTEM AT A TIME	A1. SWITCH FAILS OPEN B1. INTERNAL PART FAILURE	LOSS OF ABILITY TO OVERRIDE PROTECTIVE OPERATION SYSTEM.	DELAY FOR SYSTEM REPAIR	3
			A2. SWITCH FAILS CLOSED B2. WELDED CONTACT	LOSS OF PROTECTIVE SYSTEM INTENDED TO LIMIT CRANE SYSTEM S OPERATION	DELAY FOR SYSTEM REPAIR	3

10/10/01 16:42:41

FAILURE MODES AND EFFECTS ANALYSIS (FMEA) WORKSHEET

System: 105/10-TON BRIDGE CRANE, OYSTER CREEK

Subsystem: TROLLEY ELECTRICAL CONTROL SYSTEM

Drawing No.: VEN DRAWING D-1408-810

PROGRAM

OYSTER CREEK 105/10-TON BRIDGE CRANE

Page 1 of 3 Date: 09/28/2000

DRAWING FIND NO.	PART NAME	PART FUNCTION	A. FAILURE MODE B. CAUSE	FAILURE EFFECT ON SYSTEM PERFORMANCE	FAILURE EFFECT ON SYSTEM OPERATIONS OR PERSONNEL SAFETY	CRIT CAT
TRIM	JOYSTICK, TROLLEY EAST	PROVIDES THE OPERATOR THE ABILITY TO SELECT TROLLEY DIRECTION OF TRAVEL AND VARY TROLLEY SPEED WITHIN SELECTED SPEED MODE. JOYSTICK IN CENTERED POSITION COMMANDS ALL STOP	A1. FAILS TO OPERATE B1. DEFECTIVE VARISTOR	LOSS OF ABILITY TO COMMAND TROLLEY IN THE EAST DIRECTION OF TRAVEL.	DELAY FOR SYSTEM REPAIR	3
			A2. FAILS FROZEN B2. CORROSION	TROLLEY WILL CONTINUE TO MOVE, OPERATOR UNABLE USING JOYSTICK TO COMMAND ALL STOP. TROLLEY CAN BE STOPPED USING STOP PUSH BUTTON WHICH OPENS MAIN LINE CONTACTOR TERMINATING FACILITY POWER TO CRANE. REQUIRES MULTIPLE FAILURES TO BECOME CRITICAL.	DELAY FOR SYSTEM REPAIR	3
	JOYSTICK, TROLLEY WEST	PROVIDES THE ABILITY TO SELECT DIRECTION AND SPEED OF TRAVEL OF THE TROLLEY.	A1. FAILS TO OPERATE B1. DEFECTIVE VARISTOR	LOSS OF ABILITY TO COMMAND TROLLEY IN THE WEST DIRECTION OF TRAVEL.	DELAY FOR SYSTEM REPAIR	3
			A2. FAILS FROZEN B2. CORROSION	TROLLEY WILL CONTINUE TO MOVE, OPERATOR UNABLE USING JOYSTICK TO COMMAND ALL STOP. TROLLEY CAN BE STOPPED USING STOP PUSH BUTTON WHICH OPENS MAIN LINE CONTACTOR TERMINATING FACILITY POWER TO CRANE. REQUIRES MULTIPLE FAILURES TO BECOME CRITICAL.	DELAY FOR SYSTEM REPAIR	3

10/10/01 16:42:41

FAILURE MODES AND EFFECTS ANALYSIS (FMEA) WORKSHEET

System: 105/10-TON BRIDGE CRANE, OYSTER CREEK
Subsystem: TROLLEY ELECTRICAL CONTROL SYSTEM
Drawing No.: VEN DRAWING D-1408-810

PROGRAM
OYSTER CREEK 105/10-TON BRIDGE CRANE

 Date: 09/28/2000

DRAWING FIND NO.	PART NAME	PART FUNCTION	A. FAILURE MODE B. CAUSE	FAILURE EFFECT ON SYSTEM PERFORMANCE	FAILURE EFFECT ON SYSTEM OPERATIONS OR PERSONNEL SAFETY	CRIT CAT
BCR2	CONTACTOR, 4 N O CONTACTS	WHEN ENERGIZED CLOSES CONTACTS BCR2 AND PROVIDES TROLLEY EAST AND WEST LIMIT OVERRIDE	A1. COIL FAILS OPEN B1. DEFECTIVE COIL	TROLLEY LIMIT BYPASS INOPERATIVE	DELAY FOR SYSTEM REPAIR	3
			A2. COIL FAILS SHORTED B2. DEFECTIVE COIL	EFFECTED TROLLEY LIMIT BYPASS INOPERATIVE	DELAY FOR SYSTEM REPAIR	3
			A3 1 CONTACTS FAIL OPEN B3 BROKEN CONTACT LEAF	EFFECTED TROLLEY LIMIT BYPASS INOPERATIVE	DELAY FOR SYSTEM REPAIR	3
			A4 1 CONTACT FAILS CLOSED B4. WELDED CONTACT	NO EFFECT, REDUNDANT CONTACT IN SERIES WILL BE OPEN	DELAY FOR SYSTEM REPAIR	3
TELS	SWITCH, EAST TROLLEY LIMIT	PROVIDES OVERTRAVEL LIMIT PROTECTION TO THE TROLLEY IN THE EAST DIRECTION OF TRAVEL	A1 FAILS OPEN B1 BROKEN CONTACT LEAF	TROLLEY EAST LIMIT SWITCH CAN BE BYPASSED ALLOWING OPERATION OF THE TROLLEY AFTER PER-SET LIMIT HAS BEEN REACHED.	DELAY FOR SYSTEM REPAIR	3
			A2 FAILS CLOSED B2. WELDED CONTACTS	LOSS OF TROLLEY EAST OVERTRAVEL PROTECTION. TROLLEY WILL CONTACT END STOPS	DELAY FOR SYSTEM REPAIR	3
TWLS	SWITCH, WEST TROLLEY LIMIT	PROVIDES OVERTRAVEL LIMIT PROTECTION TO THE TROLLEY IN THE WEST DIRECTION OF TRAVEL	A1 FAILS OPEN B1. BROKEN CONTACT LEAF	TROLLEY WEST LIMIT SWITCH CAN BE BYPASSED ALLOWING OPERATION OF THE TROLLEY AFTER PER-SET LIMIT HAS BEEN REACHED.	DELAY FOR SYSTEM REPAIR	3
			A2 FAILS CLOSED B2 WELDED CONTACTS	LOSS OF TROLLEY WEST OVERTRAVEL PROTECTION. TROLLEY WILL CONTACT END STOPS	DELAY FOR SYSTEM REPAIR	3

10/10/01 16:42:41

FAILURE MODES AND EFFECTS ANALYSIS (FMEA) WORKSHEET

System: 105/10-TON BRIDGE CRANE, OYSTER CREEK
Subsystem: TROLLEY ELECTRICAL CONTROL SYSTEM
Drawing No.: VEN DRAWING D-1408-810

PROGRAM
OYSTER CREEK 105/10-TON BRIDGE CRANE

Page 3 of 3 Date: 09/28/2000

DRAWING FIND NO.	PART NAME	PART FUNCTION	A. FAILURE MODE B. CAUSE	FAILURE EFFECT ON SYSTEM PERFORMANCE	FAILURE EFFECT ON SYSTEM OPERATIONS OR PERSONNEL SAFETY	CRIT CAT
TTP1/TTP2	SWITCH, THERMAL OVER LOAD	PROVIDES THERMAL OVERLOAD PROTECTION TO THE TROLLEY MOTOR.	A1 FAILS OPEN PREMATURELY B1 DEFECTIVE MATERIAL	TROLLEY SYSTEM INOPERATIVE.	DELAY FOR SYSTEM REPAIR	3
			A2 FAILS CLOSED B2 WELDED SWITCH CONTACT	LOSS OF THERMAL OVERLOAD PROTECTION, POSSIBLE DAMAGE TO EFFECTED TROLLEY MOTOR	DELAY FOR SYSTEM REPAIR	3
TBR1	RECTIFIER, BRIDGE	PROVIDES CONSTANT VOLTAGE TO THE PROGRAMMABLE LOGIC CONTROLLER (PLC)	A1 FAILS OPEN B1 OPEN DIODE	LOSS OF POWER TO PLC, TROLLEY SYSTEM AFD WILL TERMINATE TROLLEY OPERATION.	DELAY FOR SYSTEM REPAIR	3
TBC	CONTACTOR, 2 N.O. CONTACTS	WHEN ENERGIZED PROVIDES ABILITY TO CLOSE CONTACT TBC AND WITHDRAW TROLLEY DISC BRAKES	A1 COIL FAILS OPEN B1 DEFECTIVE COIL	TROLLEY SYSTEM BRAKES WILL REMAIN ENGAGED, TROLLEY SYSTEM INOPERATIVE.	DELAY FOR SYSTEM REPAIR	3
			A2 COIL FAILS SHORTED B2 DEFECTIVE COIL	TROLLEY SYSTEM BRAKES WILL REMAIN ENGAGED, TROLLEY SYSTEM INOPERATIVE.	DELAY FOR SYSTEM REPAIR	3
			A3 CONTACTS FAIL OPEN B3 BROKEN CONTACT LEAF	TROLLEY SYSTEM BRAKES WILL REMAIN ENGAGED, TROLLEY SYSTEM INOPERATIVE.	DELAY FOR SYSTEM REPAIR	3
			A4 CONTACTS FAIL CLOSED B4 WELDED CONTACTS	TROLLEY BRAKES WILL REMAIN DISENGAGED, OPERATOR CAN STOP TROLLEY USING STOP BUTTON.	DELAY FOR SYSTEM REPAIR	3

10/10/01 16:42:41

FAILURE MODES AND EFFECTS ANALYSIS (FMEA) WORKSHEET

System: 105/10-TON BRIDGE CRANE, OYSTER CREEK

Subsystem: TROLLEY ELECTRICAL (AFD)

Drawing No.: DRAWING D-18408-813

PROGRAM

105/10-TON BRIDGE CRANE - OYSTER CREEK

Page 1 of 2 Date: 09/28/2000

FIND NO.	PART NAME	PART FUNCTION	A. FAILURE MODE B. CAUSE	FAILURE EFFECT ON SYSTEM PERFORMANCE	FAILURE EFFECT ON SYSTEM OPERATIONS OR PERSONNEL SAFETY	CRIT CAT
DT90L4	MOTOR, HOIST, 2 HP (2 UNITS)	PROVIDES MOTIVE FORCE REQUIRED TO OPERATE TROLLEY SYSTEM	A1. FAILS TO OPERATE B1. DEFECTIVE WINDINGS	TROLLEY SYSTEM INOPERATIVE. PLC WILL SENSE LOSS AND MAINTAIN MOTOR BRAKE IN ENGAGED POSITION	DELAY FOR SYSTEM REPAIR	3
			A2. FAILS DURING OPERATION B2. DEFECTIVE WINDINGS	TROLLEY SYSTEM INOPERATIVE. PLC WILL SENSE LOSS AND ENGAGED MOTOR BRAKE AND EMERGENCY BRAKE.	DELAY FOR SYSTEM REPAIR	3
TLR	LINE REACTOR, 460 VAC	PROVIDES LINE VOLTAGE BUFFERING OF INBOUND POWER TO THE TROLLEY DRIVE SYSTEM	A1. FAILS OPEN B1. INTERNAL PART FAILURE	TROLLEY DRIVE SYSTEM INOPERATIVE.	DELAY FOR SYSTEM REPAIR	3
			A2. FAILS TO BUFFER VOLTAGE B2. INTERNAL PART FAILURE	POSSIBLE DAMAGE TO TROLLEY DRIVE SYSTEM COMPONENTS DUE TO VOLTAGE SPIKES.	DELAY FOR SYSTEM REPAIR	3
TDBR	BRAKE, DYNAMIC	PROVIDES LOAD CONTROL USING DYNAMIC BRAKING WHILE LOAD IS MOVING DOWNWARD	A1. RESISTORS FAIL OPEN B1. STRUCTURAL FAILURE	LOSS OF DYNAMIC BRAKING, LOAD WILL NOT DECEND SMOOTHLY. TROLLEY MOTOR WILL MAINTAIN CONTROL OF LOAD. PLC WILL SENSE DB LOSS	DELAY FOR SYSTEM REPAIR	3
			A2. MODULE FAULT B2. INTERNAL PART FAILURE	LOSS OF DYNAMIC BRAKING, LOAD WILL NOT DECEND SMOOTHLY. TROLLEY MOTOR WILL MAINTAIN CONTROL OF LOAD. PLC WILL SENSE DB LOSS	DELAY FOR SYSTEM REPAIR	3

FAILURE MODES AND EFFECTS ANALYSIS (FMEA) WORKSHEET

System: 105/10-TON BRIDGE CRANE, OYSTER CREEK

Subsystem: TROLLEY ELECTRICAL (AFD)

Drawing No.: DRAWING D-18408-813

PROGRAM

105/10-TON BRIDGE CRANE - OYSTER CREEK

Page 2 of 2 Date: 09/28/2000

FIND NO.	PART NAME	PART FUNCTION	A. FAILURE MODE B. CAUSE	FAILURE EFFECT ON SYSTEM PERFORMANCE	FAILURE EFFECT ON SYSTEM OPERATIONS OR PERSONNEL SAFETY	CRIT CAT
TVFD	ADJUSTABLE FREQUENCY DRIVE, TROLLEY	PROVIDES FINE ADJUSTMENT OF TROLLEY MOTOR DRIVE SPEED AND MONITORS ALL TROLLEY.	A1 FAILS TO FUNCTION B1 INTERNAL CIRCUIT FAILURE	TROLLEY SYSTEM INOPERATIVE	DELAY FOR SYSTEM REPAIR	3
			A2 ERRONEOUS OUTPUT B2 INTERNAL CIRCUIT FAILURE	TROLLEY SPEED MAY BE HIGHER/LOWER THAN COMMANDED. PLC WILL SENSE DIFFERENCE AND FAULT THE TROLLEY SYSTEM.	DELAY FOR SYSTEM REPAIR	3

10/10/01 16:42:41

FAILURE MODES AND EFFECTS ANALYSIS (FMEA) WORKSHEET

System: 105/10-TON BRIDGE CRANE, OYSTER CREEK

Subsystem: BRIDGE ELECTRICAL CONTROL SYSTEM

Drawing No.: VEN DRAWING D-1408-810

PROGRAM

OYSTER CREEK 105/10-TON BRIDGE CRANE

Page 1 of 3 Date: 09/28/2000

DRAWING FIND NO.	PART NAME	PART FUNCTION	A. FAILURE MODE B. CAUSE	FAILURE EFFECT ON SYSTEM PERFORMANCE	FAILURE EFFECT ON SYSTEM OPERATION OR PERSONNEL SAFETY	CRIT CAT
BRIM	JOYSTICK, BRIDGE NORTH	PROVIDES THE OPERATOR THE ABILITY TO SELECT BRIDGE DIRECTION OF TRAVEL AND VARY BRIDGE SPEED WITHIN SELECTED SPEED MODE. JOYSTICK IN CENTERED POSITION COMMANDS ALL STOP	A1. FAILS TO OPERATE B1. DEFECTIVE VARISTOR	LOSS OF ABILITY TO COMMAND BRIDGE IN THE NORTH DIRECTION OF TRAVEL.	DELAY FOR SYSTEM REPAIR	3
			A2. FAILS FROZEN B2. CORROSION	BRIDGE WILL CONTINUE TO MOVE, OPERATOR UNABLE USING JOYSTICK TO COMMAND ALL STOP. BRIDGE CAN BE STOPPED USING STOP PUSH BUTTON WHICH OPENS MAIN LINE CONTACTOR TERMINATING FACILITY POWER TO CRANE. REQUIRES MULTIPLE FAILURES TO BECOME CRITICAL.	DELAY FOR SYSTEM REPAIR	3
	JOYSTICK, BRIDGE SOUTH	PROVIDES THE ABILITY TO SELECT DIRECTION AND SPEED OF TRAVEL OF THE BRIDGE	A1. FAILS TO OPERATE B1. DEFECTIVE VARISTOR	LOSS OF ABILITY TO COMMAND BRIDGE IN THE SOUTH DIRECTION OF TRAVEL.	DELAY FOR SYSTEM REPAIR	3
			A2. FAILS FROZEN B2. CORROSION	BRIDGE WILL CONTINUE TO MOVE, OPERATOR UNABLE USING JOYSTICK TO COMMAND ALL STOP. BRIDGE CAN BE STOPPED USING STOP PUSH BUTTON WHICH OPENS MAIN LINE CONTACTOR TERMINATING FACILITY POWER TO CRANE. REQUIRES MULTIPLE FAILURES TO BECOME CRITICAL.	DELAY FOR SYSTEM REPAIR	3

FAILURE MODES AND EFFECTS ANALYSIS (FMEA) WORKSHEET

System: 105/10-TON BRIDGE CRANE, OYSTER CREEK
Subsystem: BRIDGE ELECTRICAL CONTROL SYSTEM
Drawing No.: VEN DRAWING D-1408-810

PROGRAM
OYSTER CREEK 105/10-TON BRIDGE CRANE

Page 2 of 3 Date: 09/28/2000

DRAWING FIND NO.	PART NAME	PART FUNCTION	A. FAILURE MODE B. CAUSE	FAILURE EFFECT ON SYSTEM PERFORMANCE	FAILURE EFFECT ON SYSTEM OPERATION OR PERSONNEL SAFETY	CRIT CAT
BCR1	CONTACTOR, 2 N.O. CONTACTS	WHEN ENERGIZED CLOSES CONTACTS BCR2 AND PROVIDES BRIDGE EAST AND WEST LIMIT OVERRIDE.	A1. COIL FAILS OPEN B1. DEFECTIVE COIL	BRIDGE LIMIT BYPASS INOPERATIVE	DELAY FOR SYSTEM REPAIR	3
			A2. COIL FAILS SHORTED B2. DEFECTIVE COIL	EFFECTED BRIDGE LIMIT BYPASS INOPERATIVE	DELAY FOR SYSTEM REPAIR	3
			A3. CONTACTS FAIL OPEN B3. BROKEN CONTACT LEAF	EFFECTED BRIDGE LIMIT BYPASS INOPERATIVE	DELAY FOR SYSTEM REPAIR	3
			A4. CONTACT FAILS CLOSED B4. WELDED CONTACT	NO EFFECT, REDUNDANT CONTACT IN SERIES WILL BE OPEN.	DELAY FOR SYSTEM REPAIR	3
BNLS	SWITCH, NORTH BRIDGE LIMIT	PROVIDES OVERTRAVEL LIMIT PROTECTION TO THE BRIDGE IN THE NORTH DIRECTION OF TRAVEL.	A1. FAILS OPEN B1. BROKEN CONTACT LEAF	BRIDGE NORTH LIMIT SWITCH CAN BE BYPASSED ALLOWING OPERATION OF THE BRIDGE AFTER PER-SET LIMIT HAS BEEN REACHED.	DELAY FOR SYSTEM REPAIR	3
			A2. FAILS CLOSED B2. WELDED CONTACTS	LOSS OF BRIDGE NORTH OVERTRAVEL PROTECTION BRIDGE WILL CONTACT END STOPS.	DELAY FOR SYSTEM REPAIR	3
BSLS	SWITCH, SOUTH BRIDGE LIMIT	PROVIDES OVERTRAVEL LIMIT PROTECTION TO THE BRIDGE IN THE SOUTH DIRECTION OF TRAVEL	A1. FAILS OPEN B1. BROKEN CONTACT LEAF	BRIDGE SOUTH LIMIT SWITCH CAN BE BYPASSED ALLOWING OPERATION OF THE BRIDGE AFTER PER-SET LIMIT HAS BEEN REACHED.	DELAY FOR SYSTEM REPAIR	3
			A2. FAILS CLOSED B2. WELDED CONTACTS	LOSS OF BRIDGE SOUTH OVERTRAVEL PROTECTION. BRIDGE WILL CONTACT END STOPS	DELAY FOR SYSTEM REPAIR	3

10/10/01 16:42:41

FAILURE MODES AND EFFECTS ANALYSIS (FMEA) WORKSHEET

System: 105/10-TON BRIDGE CRANE, OYSTER CREEK

Subsystem: BRIDGE ELECTRICAL CONTROL SYSTEM

Drawing No.: VEN DRAWING D-1408-810

PROGRAM

OYSTER CREEK 105/10-TON BRIDGE CRANE

Page 3 of 3 Date: 09/28/2000

DRAWING FIND NO.	PART NAME	PART FUNCTION	A. FAILURE MODE B. CAUSE	FAILURE EFFECT ON SYSTEM PERFORMANCE	FAILURE EFFECT ON SYSTEM OPERATION OR PERSONNEL SAFETY	CRIT CAT
BTP	SWITCH, THERMAL OVER LOAD	PROVIDES THERMAL OVERLOAD PROTECTION TO THE BRIDGE MOTOR.	A1 FAILS OPEN PREMATURELY B1 DEFECTIVE MATERIAL	BRIDGE SYSTEM INOPERATIVE.	DELAY FOR SYSTEM REPAIR	3
			A2 FAILS CLOSED B2 WELDED SWITCH CONTACT	LOSS OF THERMAL OVERLOAD PROTECTION, POSSIBLE DAMAGE TO EFFECTED BRIDGE MOTOR	DELAY FOR SYSTEM REPAIR	3
BBR1	RECTIFIER, BRIDGE	PROVIDES CONSTANT VOLTAGE TO THE PROGRAMMABLE LOGIC CONTROLLER (PLC)	A1 FAILS OPEN B1 OPEN DIODE	LOSS OF POWER TO PLC, BRIDGE SYSTEM AFD WILL TERMINATE BRIDGE OPERATION.	DELAY FOR SYSTEM REPAIR	3
BBC	CONTACTOR, 2 N O CONTACTS	WHEN ENERGIZED PROVIDES ABILITY TO CLOSE CONTACT TBC AND WITHDRAW BRIDGE DISC BRAKE.	A1 COIL FAILS OPEN B1 DEFECTIVE COIL	BRIDGE SYSTEM BRAKE WILL REMAIN ENGAGED, BRIDGE SYSTEM INOPERATIVE.	DELAY FOR SYSTEM REPAIR	3
			A2 COIL FAILS SHORTED B2 DEFECTIVE COIL	BRIDGE SYSTEM BRAKE WILL REMAIN ENGAGED, BRIDGE SYSTEM INOPERATIVE.	DELAY FOR SYSTEM REPAIR	3
			A3 CONTACTS FAIL OPEN B3 BROKEN CONTACT LEAF	BRIDGE SYSTEM BRAKE WILL REMAIN ENGAGED, BRIDGE SYSTEM INOPERATIVE.	DELAY FOR SYSTEM REPAIR	3
			A4 CONTACTS FAIL CLOSED B4 WELDED CONTACTS	BRIDGE BRAKE WILL REMAIN DISENGAGED, OPERATOR CAN STOP BRIDGE USING STOP BUTTON.	DELAY FOR SYSTEM REPAIR	3

FAILURE MODES AND EFFECTS ANALYSIS (FMEA) WORKSHEET

System: 105/10-TON BRIDGE CRANE, OYSTER CREEK

Subsystem: BRIDGE DRIVE SYSTEM ELECTRICAL

Drawing No.: DRAWING D-18408-814

PROGRAM

105/10-TON BRIDGE CRANE - OYSTER CREEK

Page 1 of 2 Date: 09/28/2000

FIND NO.	PART NAME	PART FUNCTION	A. FAILURE MODE B. CAUSE	FAILURE EFFECT ON SYSTEM PERFORMANCE	FAILURE EFFECT ON SYSTEM OPERATION OR PERSONNEL SAFETY	CRIT CAT
265D	MOTOR, HOIST, 10 HP	PROVIDES MOTIVE FORCE REQUIRED TO OPERATE BRIDGE SYSTEM	A1. FAILS TO OPERATE B1. DEFECTIVE WINDINGS	BRIDGE SYSTEM INOPERATIVE. PLC WILL SENSE LOSS AND MAINTAIN MOTOR BRAKE IN ENGAGED POSITION	DELAY FOR SYSTEM REPAIR	3
			A2. FAILS DURING OPERATION B2. DEFECTIVE WINDINGS	BRIDGE SYSTEM INOPERATIVE. PLC WILL SENSE LOSS AND ENGAGED MOTOR BRAKE AND EMERGENCY BRAKE.	DELAY FOR SYSTEM REPAIR	3
BLR	LINE REACTOR, 460 VAC	PROVIDES LINE VOLTAGE BUFFERING OF INBOUND POWER TO THE BRIDGE DRIVE SYSTEM	A1. FAILS OPEN B1. INTERNAL PART FAILURE	BRIDGE DRIVE SYSTEM INOPERATIVE.	DELAY FOR SYSTEM REPAIR	3
			A2. FAILS TO BUFFER VOLTAGE B2. INTERNAL PART FAILURE	POSSIBLE DAMAGE TO BRIDGE DRIVE SYSTEM COMPONENTS DUE TO VOLTAGE SPIKES.	DELAY FOR SYSTEM REPAIR	3
BDBR	BRAKE, DYNAMIC	PROVIDES LOAD CONTROL USING DYNAMIC BRAKING WHILE LOAD IS MOVING DOWNWARD.	A1. RESISTORS FAIL OPEN B1. STRUCTURAL FAILURE	LOSS OF DYNAMIC BRAKING, LOAD WILL NOT DECEND SMOOTHLY. BRIDGE MOTOR WILL MAINTAIN CONTROL OF LOAD. PLC WILL SENSE DB LOSS	DELAY FOR SYSTEM REPAIR	3
			A2. MODULE FAULT B2. INTERNAL PART FAILURE	LOSS OF DYNAMIC BRAKING, LOAD WILL NOT DECEND SMOOTHLY BRIDGE MOTOR WILL MAINTAIN CONTROL OF LOAD. PLC WILL SENSE DB LOSS.	DELAY FOR SYSTEM REPAIR	3
BVFD	ADJUSTABLE FREQUENCY DRIVE, BRIDGE	PROVIDES FINE ADJUSTMENT OF BRIDGE MOTOR DRIVE SPEED AND MONITORS ALL BRIDGE.	A1. FAILS TO FUNCTION B1. INTERNAL CIRCUIT FAILURE	BRIDGE SYSTEM INOPERATIVE	DELAY FOR SYSTEM REPAIR	3

10/10/01 16:42:41

FAILURE MODES AND EFFECTS ANALYSIS (FMEA) WORKSHEET

System: 105/10-TON BRIDGE CRANE, OYSTER CREEK

Subsystem: BRIDGE DRIVE SYSTEM ELECTRICAL

Drawing No.: DRAWING D-18408-814

PROGRAM

105/10-TON BRIDGE CRANE - OYSTER CREEK

Page 2 of 2 Date: 09/28/2000

FIND NO.	PART NAME	PART FUNCTION	A. FAILURE MODE B. CAUSE	FAILURE EFFECT ON SYSTEM PERFORMANCE	FAILURE EFFECT ON SYSTEM OPERATION OR PERSONNEL SAFETY	CRIT CAT
			A2. ERRONEOUS OUTPUT B2. INTERNAL CIRCUIT FAILURE	TROLLEY SPEED MAY BE HIGHER/LOWER THAN COMMANDED. PLC WILL SENSE DIFFERENCE AND FAULT THE TROLLEY SYSTEM.	DELAY FOR SYSTEM REPAIR	3

10/10/01 16:42:41

Enclosure 4

Oyster Creek Generating Station

Technical Specification Change Request No. 281

Response to Request for Additional Information

Revised Technical Specification Bases Page 5.3-2

~~The elevation limitation of the spent fuel shipping cask to no more than 6 inches above the top plate of the cask drop protection system prevents loss of the pool integrity resulting from postulated drop accidents. An analysis of the effects of a 100-ton cask drop from 6 inches has been done (4) which showed that the pool structure is capable of sustaining the loads imposed during such a drop. Limit switches on the crane restrict the elevation of the cask to less than or equal to 6 inches when it is above the top plate.~~

Detailed structural analysis of the spent fuel pool was performed using loads resulting from the dead weight of the structural elements, the building loads, hydrostatic loads from the pool water, the weight of fuel and racks stored in the pool, seismic loads, loads due to thermal gradients in the pool floor and the walls, and dynamic load from the cask drop accident. Thermal gradients result in two loading conditions: normal operating and the accident conditions with the loss of spent fuel pool cooling. For the normal condition, the reactor building air temperature was assumed to vary between 65°F and 110°F while the pool water temperature varied between 85°F and 125°F. The most severe loading from the normal operating thermal gradient results with reactor building air temperatures at 65°F and the water temperature at 125°F. Air temperature measurements made during all phases of plant operation in the shutdown heat exchanger room, which is directly beneath part of the spent fuel pool floor slab, show that 65°F is the appropriate minimum air temperature. The spent fuel pool water temperature will alarm control room before the water temperature reaches 120°F.

Results of the structural analysis show that the pool structure is structurally adequate for the loadings associated with the normal operation and the condition resulting from the postulated cask drop accident (5) (6). The floor framing was also found to be capable of withstanding the steady state thermal gradient conditions with the pool water temperature at 150°F without exceeding ACI Code requirements. The walls are also capable of operation at a steady state condition with the pool water temperature at 140°F (5).

Since the cooled fuel pool water returns at the bottom of the pool and the heated water is removed from the surface, the average of the surface temperature and the fuel pool cooling return water is an appropriate estimate of the average bulk temperature; alternately the pool surface temperature could be conservatively used.

References

1. Amendment No. 78 to FDSAR (Section 7)
2. Supplement No. 1 to Amendment No. 78 to the FDSAR (Question 12)
3. Supplement No. 1 to Amendment 78 of the FDSAR (Question 40)
4. ~~Supplement No. 1 to Amendment 68 of the FDSAR~~
5. Revision No. 1 to Addendum 2 to Supplement No. 1 to Amendment No. 78 of FDSAR (Questions 5 and 10)
6. FDSAR Amendment No. 79
7. Deleted
8. Holtec Report HI-981983, Revision 4

Deleted

Enclosure 5

Oyster Creek Generating Station

Technical Specification Change Request No. 281

Response to Request for Additional Information

New Commitments

Commitments

1) AmerGen Response to Question 1, Page 3, Section 5.1.1 (1), Safe Load Paths:

   Procedures will be revised to require authorization from the Plant Manager or designee and the Engineering Director or designee for heavy load paths other than those previously authorized over the reactor cavity with the shield blocks removed, or over the spent fuel storage pool.

2) AmerGen Response to Question 4, Page 10, Matrix Item 3.1.1(B):

   Plant procedures will be revised to prevent heavy load travel over "HOT" irradiated fuel.

3) AmerGen Response to Question 4, Page 10, Matrix Item 3.13(A):

   Plant procedures will be revised to minimize the length of travel of heavy loads over spent fuel.

4) AmerGen Response to Question 3, Page 26, re: NUREG-0612:

   All new lifting devices and interfacing lift points, associated with heavy loads handled by the reactor building crane, will meet the associated requirements of NUREG-0612, Section 5.1.6 [5.1.6(1) and 5.1.6(3), respectively].

The commitments above will be implemented within 60 days of issuance of the license amendment approving the requested change.