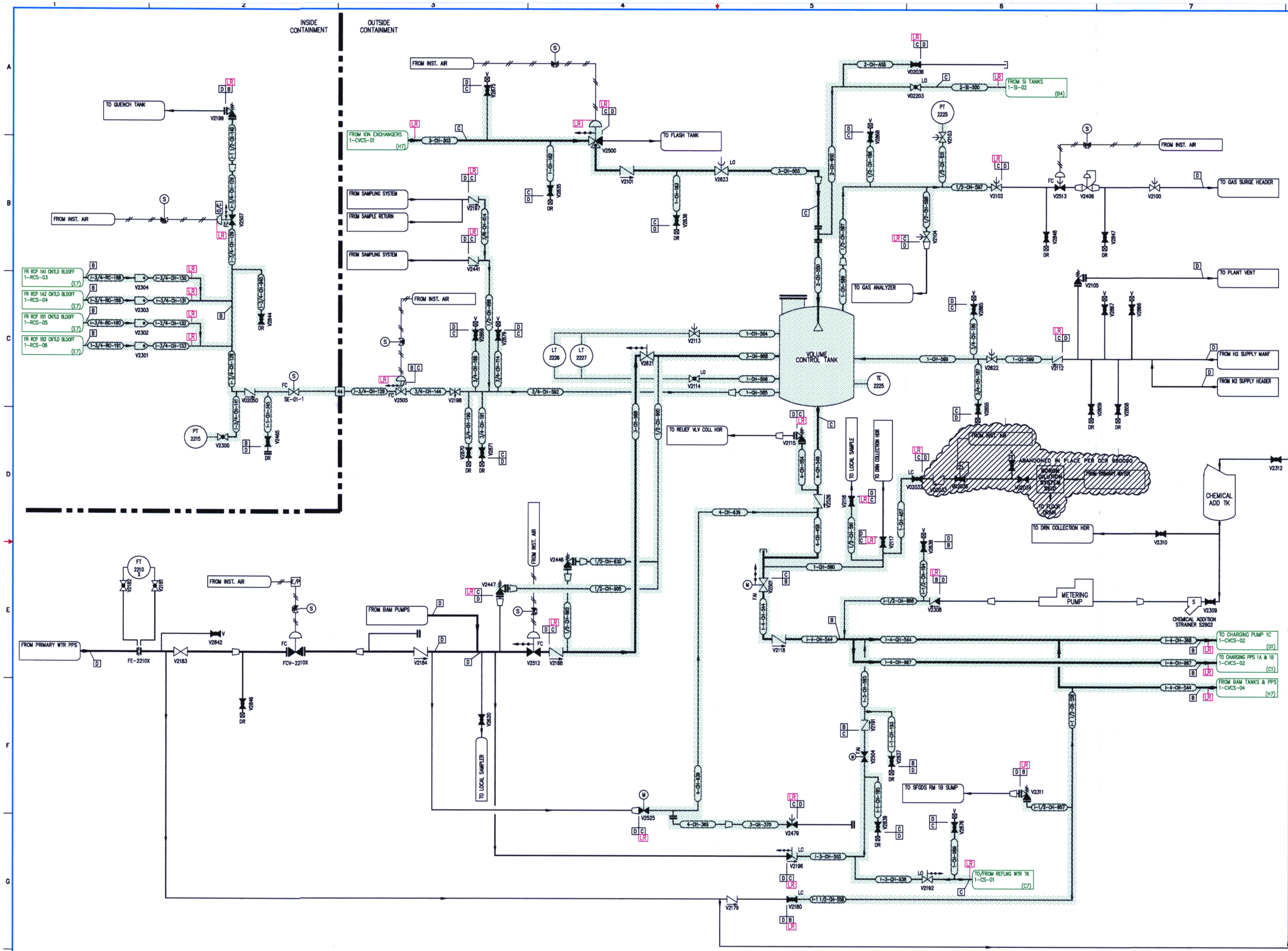

D- 018

NOTES:

1. FOR GENERAL NOTES & LEGEND SEE DRAWING NO. 1-NOTES-01.

FLORIDA POWER & LIGHT
ST. LUCIE NUCLEAR UNIT 1

CHEMICAL AND VOLUME CONTROL

LICENSE RENEWAL BOUNDARY DRAWING

DRAWING NUMBER	REVISION
1-CVCS-03	0

1CVCS03.DWG