NUCLEAR SERVICES BUSINESS UNIT

NSBU COMPONENT SURVEILLANCE SCHEDULE

Westinghouse Proprietary

COMPONENT: R.V. Circumferential Shell Welds

89	89		INT		EXAMINATION METHOD			FIRST INTERVAL			SECOND INTERVAL			THIRD INTERVAL			FOURTH INTERVAL			
ITEM NUMBER	CATEGORY NUMBER	DESCRIPTION	SKETCH NUMBER	IDENT. NUMBER	VOL.	SUR	VIS.	1ST	2ND	3RD	1ST	2ND	3RD	1ST	2ND	3RD	1ST	2ND	3RD	REMARKS
								PERIOD			PERIOD			PERIOD			PERIOD			
B1.11	B-A		1-1100	2	X											/				Reference Table 4.0
B1.11	B-A		1-1100	3	X											/				
B1.11	B-A		1-1100	4	X											/				
TOTAL ID'S FOR B1.11				3	3	0	0	TOTAL SCHEDULED						0	0	3				
								TOTAL COMPLETED						0	0	0				

NSBU COMPONENT SURVEILLANCE SCHEDULE
Westinghouse Proprietary

COMPONENT: R.V. Longitudinal Shell Welds

89	89		INT		EXAMINATION METHOD			FIRST INTERVAL			SECOND INTERVAL			THIRD INTERVAL			FOURTH INTERVAL			
ITEM NUMBER	CATEGORY NUMBER	DESCRIPTION	SKETCH NUMBER	IDENT. NUMBER	VOL.	SUR	VIS.	1ST	2ND	3RD	1ST	2ND	3RD	1ST	2ND	3RD	1ST	2ND	3RD	REMARKS
								PERIOD			PERIOD			PERIOD			PERIOD			
B1.12	B-A		1-1100	5	X											/				Reference Table 4.0
B1.12	B-A		1-1100	6	X											/				
B1.12	B-A		1-1100	7	X											/				
B1.12	B-A		1-1100	8	X											/				
B1.12	B-A		1-1100	9	X											/				
B1.12	B-A		1-1100	10	X											/				
B1.12	B-A		1-1100	11	X											/				
B1.12	B-A		1-1100	12	X											/				
B1.12	B-A		1-1100	13	X											/				
TOTAL ID'S FOR B1.12				9	9	0	0	TOTAL SCHEDULED						0	0	9				
								TOTAL COMPLETED						0	0	0				

NSBU COMPONENT SURVEILLANCE SCHEDULE

Westinghouse Proprietary

COMPONENT: Reactor Coolant Pump Flywheel - Augmented

89	89		INT		EXAMINATION METHOD			FIRST INTERVAL			SECOND INTERVAL			THIRD INTERVAL			FOURTH INTERVAL			
ITEM NUMBER	CATEGORY NUMBER	DESCRIPTION	SKETCH NUMBER	IDENT. NUMBER	VOL.	SUR	VIS.	1ST	2ND	3RD	1ST	2ND	3RD	1ST	2ND	3RD	1ST	2ND	3RD	REMARKS
								PERIOD			PERIOD			PERIOD			PERIOD			
Brg1.14	R-G		1-5100	RCP Spare	X										/					Reference Table 4.0
				RCP Spare		X									/					Schedule subject to
Brg1.14	R-G		1-5100	31 Flywheel	X									/						change based on
				31 Flywheel		X								/						PM Program
Brg1.14	R-G		1-5100	32 Flywheel	X									/						
				32 Flywheel		X									/					
Brg1.14	R-G		1-5100	33 Flywheel	X											/				
				33 Flyweel		X										/				
Brg1.14	R-G		1-5100	34 Flywheel	X											/				
				34 Flywheel		X										/				
TOTAL ID'S FOR Brg1.14				5	5	5	0	TOTAL SCHEDULED						3	3	4				
								TOTAL COMPLETED						0	0	0				

NSBU COMPONENT SURVEILLANCE SCHEDULE
Westinghouse Proprietary

COMPONENT: R.V. Circumferential Head Welds

89	89		INT		EXAMINATION METHOD			FIRST INTERVAL			SECOND INTERVAL			THIRD INTERVAL			FOURTH INTERVAL			
ITEM NUMBER	CATEGORY NUMBER	DESCRIPTION	SKETCH NUMBER	IDENT. NUMBER	VOL.	SUR	VIS.	1ST	2ND	3RD	1ST	2ND	3RD	1ST	2ND	3RD	1ST	2ND	3RD	REMARKS
								PERIOD			PERIOD			PERIOD			PERIOD			
B1.21	B-A		1-1100	14	X											/				Reference Table 4.0
B1.21	B-A		1-1300	8	X									/						
TOTAL ID'S FOR B1.21				2	2	0	0	TOTAL SCHEDULED						1	0	1				
								TOTAL COMPLETED						0	0	0				

NSBU COMPONENT SURVEILLANCE SCHEDULE
Westinghouse Proprietary

COMPONENT: R.V. Meridional Head Welds

89	89		INT		EXAMINATION METHOD			FIRST INTERVAL			SECOND INTERVAL			THIRD INTERVAL			FOURTH INTERVAL			
ITEM NUMBER	CATEGORY NUMBER	DESCRIPTION	SKETCH NUMBER	IDENT. NUMBER	VOL.	SUR	VIS.	1ST	2ND	3RD	1ST	2ND	3RD	1ST	2ND	3RD	1ST	2ND	3RD	REMARKS
								PERIOD			PERIOD			PERIOD			PERIOD			
B1.22	B-A		1-1100	15	X											/				Reference Table 4.0
B1.22	B-A		1-1100	16	X											/				
B1.22	B-A		1-1100	17	X											/				
B1.22	B-A		1-1100	18	X											/				
B1.22	B-A		1-1100	19	X											/				
B1.22	B-A		1-1100	20	X											/				
B1.22	B-A		1-1300	2	X									/						Reference Table 4.0
B1.22	B-A		1-1300	3	X									/						
B1.22	B-A		1-1300	4	X									/						
B1.22	B-A		1-1300	5	X									/						
B1.22	B-A		1-1300	6	X									/						
B1.22	B-A		1-1300	7	X									/						
TOTAL ID'S FOR B1.22				12	12	0	0	TOTAL SCHEDULED						6	0	6				
								TOTAL COMPLETED						0	0	0				

NUCLEAR SERVICES BUSINESS UNIT

NSBU COMPONENT SURVEILLANCE SCHEDULE

Westinghouse Proprietary

COMPONENT: R.V. Shell to Flange Weld

89	89		INT		EXAMINATION METHOD			FIRST INTERVAL			SECOND INTERVAL			THIRD INTERVAL			FOURTH INTERVAL			
ITEM NUMBER	CATEGORY NUMBER	DESCRIPTION	SKETCH NUMBER	IDENT. NUMBER	VOL.	SUR	VIS.	1ST	2ND	3RD	1ST	2ND	3RD	1ST	2ND	3RD	1ST	2ND	3RD	REMARKS
								PERIOD			PERIOD			PERIOD			PERIOD			
B1.30	B-A		1-1100	1	X											/				Reference Table 4.0
														TOTAL SCHEDULED			0	0	1	
TOTAL ID'S FOR B1.30				1	1	0	0							TOTAL COMPLETED			0	0	0	

NSBU COMPONENT SURVEILLANCE SCHEDULE
Westinghouse Proprietary

COMPONENT: R.V. Head to Flange Weld

89	89		INT		EXAMINATION METHOD			FIRST INTERVAL			SECOND INTERVAL			THIRD INTERVAL			FOURTH INTERVAL			
ITEM NUMBER	CATEGORY NUMBER	DESCRIPTION	SKETCH NUMBER	IDENT. NUMBER	VOL.	SUR	VIS.	1ST	2ND	3RD	1ST	2ND	3RD	1ST	2ND	3RD	1ST	2ND	3RD	REMARKS
								PERIOD			PERIOD			PERIOD			PERIOD			
B1.40	B-A		1-1300	1	X									/						Reference Table 4.0
				1		X								/						
TOTAL ID'S FOR B1.40				1	1	1	0	TOTAL SCHEDULED						2	0	0				
								TOTAL COMPLETED						0	0	0				

NSBU COMPONENT SURVEILLANCE SCHEDULE

Westinghouse Proprietary

COMPONENT: Pressurizer Shell Circ. Welds

89	89		INT		EXAMINATION METHOD			FIRST INTERVAL			SECOND INTERVAL			THIRD INTERVAL			FOURTH INTERVAL			
ITEM NUMBER	CATEGORY NUMBER	DESCRIPTION	SKETCH NUMBER	IDENT. NUMBER	VOL.	SUR	VTS.	1ST	2ND	3RD	1ST	2ND	3RD	1ST	2ND	3RD	1ST	2ND	3RD	REMARKS
								PERIOD			PERIOD			PERIOD			PERIOD			
B2.11	B-B		1-2100	1	X										/					Reference Table 4.0
B2.11	B-B		1-2100	17			X							/	/	/				VT-2 Ref. Table 4.0
TOTAL ID'S FOR B2.11				2	1	0	1	TOTAL SCHEDULED						1	2	1				
								TOTAL COMPLETED						0	0	0				

NSBU COMPONENT SURVEILLANCE SCHEDULE
Westinghouse Proprietary

COMPONENT: Pressrizer Shell Long. Welds

89	89		INT		EXAMINATION METHOD			FIRST INTERVAL			SECOND INTERVAL			THIRD INTERVAL			FOURTH INTERVAL			
ITEM NUMBER	CATEGORY NUMBER	DESCRIPTION	SKETCH NUMBER	IDENT. NUMBER	VOL.	SUR	VIS.	1ST	2ND	3RD	1ST	2ND	3RD	1ST	2ND	3RD	1ST	2ND	3RD	REMARKS
								PERIOD			PERIOD			PERIOD			PERIOD			
B2.12	B-B		1-2100	2	X										/					Reference Table 4.0
B2.12	B-B		1-2100	16			X							/	/	/				VT-2. Ref. Table 4.0
TOTAL ID'S FOR B2.12				2	1	0	1	TOTAL SCHEDULED						1	2	1				
								TOTAL COMPLETED						0	0	0				

NSBU COMPONENT SURVEILLANCE SCHEDULE
Westinghouse Proprietary

COMPONENT: Steam Generator Tubesheet-To-Head Welds

89	89		INT		EXAMINATION METHOD			FIRST INTERVAL			SECOND INTERVAL			THIRD INTERVAL			FOURTH INTERVAL			
ITEM NUMBER	CATEGORY NUMBER	DESCRIPTION	SKETCH NUMBER	IDENT. NUMBER	VOL.	SUR	VIS.	1ST	2ND	3RD	1ST	2ND	3RD	1ST	2ND	3RD	1ST	2ND	3RD	REMARKS
								PERIOD			PERIOD			PERIOD			PERIOD			
B2.40	B-B		1-3101	31-1	X										/					Reference Table 4.0
B2.40	B-B		1-3101	32-1	X															
B2.40	B-B		1-3101	33-1	X															
B2.40	B-B		1-3101	34-1	X															
TOTAL ID'S FOR B2.40				4	4	0	0	TOTAL SCHEDULED						0	1	0				
								TOTAL COMPLETED						0	0	0				

NSBU COMPONENT SURVEILLANCE SCHEDULE
Westinghouse Proprietary

COMPONENT: R.V. NOZZLE TO VESSEL WELDS

89	89		INT		EXAMINATION METHOD			FIRST INTERVAL			SECOND INTERVAL			THIRD INTERVAL			FOURTH INTERVAL			
ITEM NUMBER	CATEGORY NUMBER	DESCRIPTION	SKETCH NUMBER	IDENT. NUMBER	VOL.	SUR	VIS.	1ST	2ND	3RD	1ST	2ND	3RD	1ST	2ND	3RD	1ST	2ND	3RD	REMARKS
								PERIOD			PERIOD			PERIOD			PERIOD			
B3.90	B-D		1-1100	21	X											/				REFERENCE TABLE 4.0
B3.90	B-D		1-1100	22	X											/				Code Case N-521 Applies
B3.90	B-D		1-1100	23	X											/				
B3.90	B-D		1-1100	24	X											/				
B3.90	B-D		1-1100	25	X											/				
B3.90	B-D		1-1100	26	X											/				
B3.90	B-D		1-1100	27	X											/				
B3.90	B-D		1-1100	28	X											/				
TOTAL ID'S FOR B3.90				8	8	0	0	TOTAL SCHEDULED						0	0	8				
								TOTAL COMPLETED						0	0	0				

NSBU COMPONENT SURVEILLANCE SCHEDULE
Westinghouse Proprietary

COMPONENT: R.V. NOZZLE INSIDE RADIUS SECTION

89	89		INT		EXAMINATION METHOD			FIRST INTERVAL			SECOND INTERVAL			THIRD INTERVAL			FOURTH INTERVAL			
ITEM NUMBER	CATEGORY NUMBER	DESCRIPTION	SKETCH NUMBER	IDENT. NUMBER	VOL.	SUR	VIS.	1ST	2ND	3RD	1ST	2ND	3RD	1ST	2ND	3RD	1ST	2ND	3RD	REMARKS
								PERIOD			PERIOD			PERIOD			PERIOD			
B3.100	B-D		1-1100	21IR	X											/				REFERENCE TABLE 4.0
B3.100	B-D		1-1100	22IR	X											/				Code Case N-521 Applies
B3.100	B-D		1-1100	23IR	X											/				
B3.100	B-D		1-1100	24IR	X											/				
B3.100	B-D		1-1100	25IR	X											/				
B3.100	B-D		1-1100	26IR	X											/				
B3.100	B-D		1-1100	27IR	X											/				
B3.100	B-D		1-1100	28IR	X											/				
TOTAL ID'S FOR B3.100				8	8	0	0	TOTAL SCHEDULED						0	0	8				
								TOTAL COMPLETED						0	0	0				

NSBU COMPONENT SURVEILLANCE SCHEDULE
Westinghouse Proprietary

COMPONENT: PRESSURIZER NOZ. INSIDE RADIUS SECTION

89	89		INT		EXAMINATION METHOD			FIRST INTERVAL			SECOND INTERVAL			THIRD INTERVAL			FOURTH INTERVAL			
ITEM NUMBER	CATEGORY NUMBER	DESCRIPTION	SKETCH NUMBER	IDENT. NUMBER	VOL.	SUR	VIS.	1ST	2ND	3RD	1ST	2ND	3RD	1ST	2ND	3RD	1ST	2ND	3RD	REMARKS
								PERIOD			PERIOD			PERIOD			PERIOD			
B3.120	B-D		1-2100	20IR			X							/	/	/				VT-2. REF. TABLE 4.0
B3.120	B-D		1-2100	21IR			X							/	/	/				
B3.120	B-D		1-2100	22IR			X							/	/	/				
B3.120	B-D		1-2100	23IR			X							/	/	/				
B3.120	B-D		1-2100	24IR			X							/	/	/				
B3.120	B-D		1-2100	25IR			X							/	/	/				
TOTAL ID'S FOR B3.120				6	0	0	6	TOTAL SCHEDULED						6	6	6				
								TOTAL COMPLETED						0	0	0				

NSBU COMPONENT SURVEILLANCE SCHEDULE
Westinghouse Proprietary

COMPONENT: STEAM GEN. NOZ. INSIDE RADIUS SECTION

89	89		INT		EXAMINATION METHOD			FIRST INTERVAL			SECOND INTERVAL			THIRD INTERVAL			FOURTH INTERVAL			
ITEM NUMBER	CATEGORY NUMBER	DESCRIPTION	SKETCH NUMBER	IDENT. NUMBER	VOL.	SUR	VIS.	1ST	2ND	3RD	1ST	2ND	3RD	1ST	2ND	3RD	1ST	2ND	3RD	REMARKS
								PERIOD			PERIOD			PERIOD			PERIOD			
B3.140	B-D		1-3101	31-1A	X										/					Reference Table 4.0
B3.140	B-D		1-3101	31-1B	X										/					
B3.140	B-D		1-3101	32-1A	X											/				
B3.140	B-D		1-3101	32-1B	X											/				
B3.140	B-D		1-3101	33-1A	X											/				
B3.140	B-D		1-3101	33-1B	X									/						
B3.140	B-D		1-3101	34-1A	X									/						
B3.140	B-D		1-3101	34-1B	X									/						
TOTAL ID'S FOR B3.140				8	8	0	0	TOTAL SCHEDULED						3	2	3				
								TOTAL COMPLETED						0	0	0				

NSBU COMPONENT SURVEILLANCE SCHEDULE
Westinghouse Proprietary

COMPONENT: CONTROL ROD DRIVES NOZZLES

89	89		INT		EXAMINATION METHOD			FIRST INTERVAL			SECOND INTERVAL			THIRD INTERVAL			FOURTH INTERVAL			
ITEM NUMBER	CATEGORY NUMBER	DESCRIPTION	SKETCH NUMBER	IDENT. NUMBER	VOL.	SUR.	VIS.	1ST	2ND	3RD	1ST	2ND	3RD	1ST	2ND	3RD	1ST	2ND	3RD	REMARKS
								PERIOD			PERIOD			PERIOD			PERIOD			
B4.12	B-E		1-1300	78(CRDN)			X									/				VT-2. EXAMINE 20 NOZZLES (25%) Reference Table 4.0
TOTAL ID'S FOR B4.12				1	0	0	1	TOTAL SCHEDULED						0	0	1				
								TOTAL COMPLETED						0	0	0				

NSBU COMPONENT SURVEILLANCE SCHEDULE
Westinghouse Proprietary

COMPONENT: Instrumentation Nozzles

89	89		INT		EXAMINATION METHOD			FIRST INTERVAL			SECOND INTERVAL			THIRD INTERVAL			FOURTH INTERVAL			
ITEM NUMBER	CATEGORY NUMBER	DESCRIPTION	SKETCH NUMBER	IDENT. NUMBER	VOL.	SUR	VIS.	1ST	2ND	3RD	1ST	2ND	3RD	1ST	2ND	3RD	1ST	2ND	3RD	REMARKS
								PERIOD			PERIOD			PERIOD			PERIOD			
B4.13	B-E		1-1100	58 (NOZZ.)			X									/				VT-2. EXAMINE 15 NOZZLES (25%) Reference Table 4.0
TOTAL ID'S FOR B4.13				1	0	0	1	TOTAL SCHEDULED						0	0	1				
								TOTAL COMPLETED						0	0	0				

NSBU COMPONENT SURVEILLANCE SCHEDULE
Westinghouse Proprietary

COMPONENT: PRESSURIZER HEATER PENENTRATIONS

89	89		INT		EXAMINATION METHOD			FIRST INTERVAL			SECOND INTERVAL			THIRD INTERVAL			FOURTH INTERVAL			
ITEM NUMBER	CATEGORY NUMBER	DESCRIPTION	SKETCH NUMBER	IDENT. NUMBER	VOL.	SUR	VIS.	1ST	2ND	3RD	1ST	2ND	3RD	1ST	2ND	3RD	1ST	2ND	3RD	REMARKS
								PERIOD			PERIOD			PERIOD			PERIOD			
B4.20	B-E		1-2100	HEAT. PEN.			X									/				VT-2. 78 TOTAL Reference Table 4.0
TOTAL ID'S FOR B4.20				1	0	0	1	TOTAL SCHEDULED						0	0	1				
								TOTAL COMPLETED						0	0	0				

NSBU COMPONENT SURVEILLANCE SCHEDULE
Westinghouse Proprietary

COMPONENT: R.V. NOZ. TO SAFE END NPS 4" AND GREATER

89	89		INT		EXAMINATION METHOD			FIRST INTERVAL			SECOND INTERVAL			THIRD INTERVAL			FOURTH INTERVAL			
ITEM NUMBER	CATEGORY NUMBER	DESCRIPTION	SKETCH NUMBER	IDENT. NUMBER	VOL.	SUR	VIS.	1ST	2ND	3RD	1ST	2ND	3RD	1ST	2ND	3RD	1ST	2ND	3RD	REMARKS
								PERIOD			PERIOD			PERIOD			PERIOD			
B5.10	B-F		1-4100	1 (DM)	X											/				REFERENCE TABLE 4.0
B5.10	B-F		1-4100	16 (DM)	X											/				Code Case N-521 Applies
B5.10	B-F		1-4200	1 (DM)	X											/				
B5.10	B-F		1-4200	16 (DM)	X											/				
B5.10	B-F		1-4300	1 (DM)	X											/				
B5.10	B-F		1-4300	16 (DM)	X											/				
B5.10	B-F		1-4400	1 (DM)	X											/				
B5.10	B-F		1-4400	16 (DM)	X											/				
#REF!				8	8	0	0	TOTAL SCHEDULED						0	0	8				
								TOTAL COMPLETED						0	0	0				

NSBU COMPONENT SURVEILLANCE SCHEDULE
Westinghouse Proprietary

COMPONENT: Pressurizer - Noz. to safe end NPS. 4" and Greater

89	89		INT		EXAMINATION METHOD			FIRST INTERVAL			SECOND INTERVAL			THIRD INTERVAL			FOURTH INTERVAL			
ITEM NUMBER	CATEGORY NUMBER	DESCRIPTION	SKETCH NUMBER	IDENT. NUMBER	VOL.	SUR	VIS.	1ST	2ND	3RD	1ST	2ND	3RD	1ST	2ND	3RD	1ST	2ND	3RD	REMARKS
								PERIOD			PERIOD			PERIOD			PERIOD			
B5.40	B-F		1-4500	1 (DM)	X									/						REFERENCE TABLE 4.0
				1 (DM)		X								/						
B5.40	B-F		1-4501	1 (DM)	X										/					
				1 (DM)		X									/					
B5.40	B-F		1-4502	1 (DM)	X									/						
				1 (DM)		X								/						
B5.40	B-F		1-4503	1 (DM)	X										/					
				1 (DM)		X									/					
B5.40	B-F		1-4504	16 (DM)	X											/				
				16 (DM)		X										/				
B5.40	B-F		1-4505	1 (DM)	X											/				
				1 (DM)		X										/				
TOTAL ID'S FOR B5.40				6	6	6	0	TOTAL SCHEDULED						4	4	4				
								TOTAL COMPLETED						0	0	0				

NSBU COMPONENT SURVEILLANCE SCHEDULE
Westinghouse Proprietary

COMPONENT: S. GEN. NOZ. TO SAFE END 4" AND GREATER

89	89		INT		EXAMINATION METHOD			FIRST INTERVAL			SECOND INTERVAL			THIRD INTERVAL			FOURTH INTERVAL			
ITEM NUMBER	CATEGORY NUMBER	DESCRIPTION	SKETCH NUMBER	IDENT. NUMBER	VOL.	SUR	VIS.	1ST	2ND	3RD	1ST	2ND	3RD	1ST	2ND	3RD	1ST	2ND	3RD	REMARKS
								PERIOD			PERIOD			PERIOD			PERIOD			
B5.70	B-F		1-4100	5 (DM)	X										/					REFERENCE TABLE 4.0
				5 (DM)		X									/					
B5.70	B-F		1-4100	6 (DM)	X										/					
				6 (DM)		X									/					
B5.70	B-F		1-4200	5 (DM)	X										/					
				5 (DM)		X									/					
B5.70	B-F		1-4200	6 (DM)	X										/					
				6 (DM)		X									/					
B5.70	B-F		1-4300	5 (DM)	X									/						
				5 (DM)		X								/						
B5.70	B-F		1-4300	6 (DM)	X									/						
				6 (DM)		X								/						
B5.70	B-F		1-4400	5 (DM)	X									/						
				5 (DM)		X								/						
B5.70	B-F		1-4400	6 (DM)	X									/						
				6 (DM)		X								/						
TOTAL ID'S FOR B5.70				8	8	8	0	TOTAL SCHEDULED						8	8	0				
								TOTAL COMPLETED						0	0	0				

NSBU COMPONENT SURVEILLANCE SCHEDULE
Westinghouse Proprietary

COMPONENT: R.V. CLOSURE HEAD NUTS

89	89		INT		EXAMINATION METHOD			FIRST INTERVAL			SECOND INTERVAL			THIRD INTERVAL			FOURTH INTERVAL			
ITEM NUMBER	CATEGORY NUMBER	DESCRIPTION	SKETCH NUMBER	IDENT. NUMBER	VOL.	SUR	VIS.	1ST	2ND	3RD	1ST	2ND	3RD	1ST	2ND	3RD	1ST	2ND	3RD	REMARKS
								PERIOD			PERIOD			PERIOD			PERIOD			
B6.10	B-G-1		1-1400	N 1		X								/						Reference Table 4.0
B6.10	B-G-1		1-1400	N 2		X								/						
B6.10	B-G-1		1-1400	N 3		X								/						
B6.10	B-G-1		1-1400	N 4		X								/						
B6.10	B-G-1		1-1400	N 5		X								/						
B6.10	B-G-1		1-1400	N 6		X								/						
B6.10	B-G-1		1-1400	N 7		X								/						
B6.10	B-G-1		1-1400	N 8		X								/						
B6.10	B-G-1		1-1400	N 9		X								/						
B6.10	B-G-1		1-1400	N 10		X								/						
B6.10	B-G-1		1-1400	N 11		X								/						
B6.10	B-G-1		1-1400	N 12		X								/						
B6.10	B-G-1		1-1400	N 13		X								/						
B6.10	B-G-1		1-1400	N 14		X								/						
B6.10	B-G-1		1-1400	N 15		X								/						
B6.10	B-G-1		1-1400	N 16		X								/						
B6.10	B-G-1		1-1400	N 17		X								/						
B6.10	B-G-1		1-1400	N 18		X								/						
B6.10	B-G-1		1-1400	N 19		X									/					
B6.10	B-G-1		1-1400	N 20		X									/					
B6.10	B-G-1		1-1400	N 21		X									/					
B6.10	B-G-1		1-1400	N 22		X									/					
B6.10	B-G-1		1-1400	N 23		X									/					
B6.10	B-G-1		1-1400	N 24		X									/					
B6.10	B-G-1		1-1400	N 25		X									/					
B6.10	B-G-1		1-1400	N 26		X									/					
B6.10	B-G-1		1-1400	N 27		X									/					
B6.10	B-G-1		1-1400	N 28		X									/					
B6.10	B-G-1		1-1400	N 29		X									/					
B6.10	B-G-1		1-1400	N 30		X									/					
B6.10	B-G-1		1-1400	N 31		X									/					
B6.10	B-G-1		1-1400	N 32		X									/					
B6.10	B-G-1		1-1400	N 33		X									/					
B6.10	B-G-1		1-1400	N 34		X									/					
B6.10	B-G-1		1-1400	N 35		X									/					
B6.10	B-G-1		1-1400	N 36		X									/					
B6.10	B-G-1		1-1400	N 37		X										/				
B6.10	B-G-1		1-1400	N 38		X										/				
B6.10	B-G-1		1-1400	N 39		X										/				

NSBU COMPONENT SURVEILLANCE SCHEDULE
Westinghouse Proprietary

COMPONENT: R.V. CLOSURE HEAD NUTS

89	89		INT		EXAMINATION METHOD			FIRST INTERVAL			SECOND INTERVAL			THIRD INTERVAL			FOURTH INTERVAL			
ITEM NUMBER	CATEGORY NUMBER	DESCRIPTION	SKETCH NUMBER	IDENT. NUMBER	VOL.	SUR	VIS.	1ST	2ND	3RD	1ST	2ND	3RD	1ST	2ND	3RD	1ST	2ND	3RD	REMARKS
								PERIOD			PERIOD			PERIOD			PERIOD			
B6.10	B-G-1		1-1400	N 40		X										/				
B6.10	B-G-1		1-1400	N 41		X										/				
B6.10	B-G-1		1-1400	N 42		X										/				
B6.10	B-G-1		1-1400	N 43		X										/				
B6.10	B-G-1		1-1400	N 44		X										/				
B6.10	B-G-1		1-1400	N 45		X										/				
B6.10	B-G-1		1-1400	N 46		X										/				
B6.10	B-G-1		1-1400	N 47		X										/				
B6.10	B-G-1		1-1400	N 48		X										/				
B6.10	B-G-1		1-1400	N 49		X										/				
B6.10	B-G-1		1-1400	N 50		X										/				
B6.10	B-G-1		1-1400	N 51		X										/				
B6.10	B-G-1		1-1400	N 52		X										/				
B6.10	B-G-1		1-1400	N 53		X										/				
B6.10	B-G-1		1-1400	N 54		X										/				
TOTAL ID'S FOR B6.10				54	0	54	0	TOTAL SCHEDULED						18	18	18				
								TOTAL COMPLETED						0	0	0				

NSBU COMPONENT SURVEILLANCE SCHEDULE
Westinghouse Proprietary

COMPONENT: R. V. CLOSURE STUDS WHEN REMOVED

89	89		INT		EXAMINATION METHOD			FIRST INTERVAL			SECOND INTERVAL			THIRD INTERVAL			FOURTH INTERVAL			
ITEM NUMBER	CATEGORY NUMBER	DESCRIPTION	SKETCH NUMBER	IDENT. NUMBER	VOL.	SUR	VIS.	1ST	2ND	3RD	1ST	2ND	3RD	1ST	2ND	3RD	1ST	2ND	3RD	REMARKS
								PERIOD			PERIOD			PERIOD			PERIOD			
B6.30	B-G-1		1-1400	S01	X									/						Reference Table 4.0
				S01		X								/						
B6.30	B-G-1		1-1400	S02		X								/						
				S02	X									/						
B6.30	B-G-1		1-1400	S03	X									/						
				S03		X								/						
B6.30	B-G-1		1-1400	S04	X									/						
				S04		X								/						
B6.30	B-G-1		1-1400	S05	X									/						
				S05		X								/						
B6.30	B-G-1		1-1400	S06	X									/						
				S06		X								/						
B6.30	B-G-1		1-1400	S07	X									/						
				S07		X								/						
B6.30	B-G-1		1-1400	S08	X									/						
				S08		X								/						
B6.30	B-G-1		1-1400	S09	X									/						
				S09		X								/						
B6.30	B-G-1		1-1400	S10	X									/						
				S10		X								/						
B6.30	B-G-1		1-1400	S11	X									/						
				S11		X								/						
B6.30	B-G-1		1-1400	S12	X									/						
				S12		X								/						
B6.30	B-G-1		1-1400	S13	X									/						
				S13		X								/						
B6.30	B-G-1		1-1400	S14	X									/						
				S14		X								/						
B6.30	B-G-1		1-1400	S15	X									/						
				S15		X								/						
B6.30	B-G-1		1-1400	S16	X									/						
				S16		X								/						
B6.30	B-G-1		1-1400	S17	X									/						
				S17		X								/						
B6.30	B-G-1		1-1400	S18	X									/						
				S18		X								/						
B6.30	B-G-1		1-1400	S19	X										/					
				S19		X									/					
B6.30	B-G-1		1-1400	S20	X										/					

NSBU COMPONENT SURVEILLANCE SCHEDULE
Westinghouse Proprietary

COMPONENT: R. V. CLOSURE STUDS WHEN REMOVED

89	89		INT		EXAMINATION METHOD			FIRST INTERVAL			SECOND INTERVAL			THIRD INTERVAL			FOURTH INTERVAL			
ITEM NUMBER	CATEGORY NUMBER	DESCRIPTION	SKETCH NUMBER	IDENT. NUMBER	VOL.	SUR	VIS.	1ST	2ND	3RD	1ST	2ND	3RD	1ST	2ND	3RD	1ST	2ND	3RD	REMARKS
								PERIOD			PERIOD			PERIOD			PERIOD			
				S20		X									/					
B6.30	B-G-1		1-1400	S21	X										/					
				S21		X									/					
B6.30	B-G-1		1-1400	S22	X										/					
				S22		X									/					
B6.30	B-G-1		1-1400	S23	X										/					
				S23		X									/					
B6.30	B-G-1		1-1400	S24	X										/					
				S24		X									/					
B6.30	B-G-1		1-1400	S25	X										/					
				S25		X									/					
B6.30	B-G-1		1-1400	S26	X										/					
				S26		X									/					
B6.30	B-G-1		1-1400	S27	X										/					
				S27		X									/					
B6.30	B-G-1		1-1400	S28	X										/					
				S28		X									/					
B6.30	B-G-1		1-1400	S29	X										/					
				S29		X									/					
B6.30	B-G-1		1-1400	S30	X										/					
				S30		X									/					
B6.30	B-G-1		1-1400	S31	X										/					
				S31		X									/					
B6.30	B-G-1		1-1400	S32	X										/					
				S32		X									/					
B6.30	B-G-1		1-1400	S33	X										/					
				S33		X									/					
B6.30	B-G-1		1-1400	S34	X										/					
				S34		X									/					
B6.30	B-G-1		1-1400	S35	X										/					
				S35		X									/					
B6.30	B-G-1		1-1400	S36	X										/					
				S36		X									/					
B6.30	B-G-1		1-1400	S37	X											/				
				S37		X										/				
B6.30	B-G-1		1-1400	S38	X											/				
				S38		X										/				
B6.30	B-G-1		1-1400	S39	X											/				
				S39		X										/				
B6.30	B-G-1		1-1400	S40	X											/				

NSBU COMPONENT SURVEILLANCE SCHEDULE
Westinghouse Proprietary

COMPONENT: R. V. CLOSURE STUDS WHEN REMOVED

89	89		INT		EXAMINATION METHOD			FIRST INTERVAL			SECOND INTERVAL			THIRD INTERVAL			FOURTH INTERVAL			
ITEM NUMBER	CATEGORY NUMBER	DESCRIPTION	SKETCH NUMBER	IDENT. NUMBER	VOL.	SUR	VIS.	1ST	2ND	3RD	1ST	2ND	3RD	1ST	2ND	3RD	1ST	2ND	3RD	REMARKS
								PERIOD			PERIOD			PERIOD			PERIOD			
				S40		X										/				
B6.30	B-G-1		1-1400	S41	X											/				
				S41		X										/				
B6.30	B-G-1		1-1400	S42	X											/				
				S42		X										/				
B6.30	B-G-1		1-1400	S43	X											/				
				S43		X										/				
B6.30	B-G-1		1-1400	S44	X											/				
				S44		X										/				
B6.30	B-G-1		1-1400	S45	X											/				
				S45		X										/				
B6.30	B-G-1		1-1400	S46	X											/				
				S46		X										/				
B6.30	B-G-1		1-1400	S47	X											/				
				S47		X										/				
B6.30	B-G-1		1-1400	S48	X											/				
				S48		X										/				
B6.30	B-G-1		1-1400	S49	X											/				
				S49		X										/				
B6.30	B-G-1		1-1400	S50	X											/				
				S50		X										/				
B6.30	B-G-1		1-1400	S51	X											/				
				S51		X										/				
B6.30	B-G-1		1-1400	S52	X											/				
				S52		X										/				
B6.30	B-G-1		1-1400	S53	X											/				
				S53		X										/				
B6.30	B-G-1		1-1400	S54	X											/				
				S54		X										/				
								TOTAL SCHEDULED						36	36	36				
#REF!				54	54	54	0	TOTAL COMPLETED						0	0	0				

NSBU COMPONENT SURVEILLANCE SCHEDULE
Westinghouse Proprietary

COMPONENT: R.V. THREADS IN FLANGE

89	89		INT		EXAMINATION METHOD			FIRST INTERVAL			SECOND INTERVAL			THIRD INTERVAL			FOURTH INTERVAL			
ITEM NUMBER	CATEGORY NUMBER	DESCRIPTION	SKETCH NUMBER	IDENT. NUMBER	VOL.	SUR	VIS.	1ST	2ND	3RD	1ST	2ND	3RD	1ST	2ND	3RD	1ST	2ND	3RD	REMARKS
								PERIOD			PERIOD			PERIOD			PERIOD			
B6.40	B-G-1		1-1100	LO1	X											/				REFERENCE TABLE 4.0
B6.40	B-G-1		1-1100	LO2	X											/				
B6.40	B-G-1		1-1100	LO3	X											/				
B6.40	B-G-1		1-1100	LO4	X											/				
B6.40	B-G-1		1-1100	LO5	X											/				
B6.40	B-G-1		1-1100	LO6	X											/				
B6.40	B-G-1		1-1100	LO7	X											/				
B6.40	B-G-1		1-1100	LO8	X											/				
B6.40	B-G-1		1-1100	LO9	X											/				
B6.40	B-G-1		1-1100	L10	X											/				
B6.40	B-G-1		1-1100	L11	X											/				
B6.40	B-G-1		1-1100	L12	X											/				
B6.40	B-G-1		1-1100	L13	X											/				
B6.40	B-G-1		1-1100	L14	X											/				
B6.40	B-G-1		1-1100	L15	X											/				
B6.40	B-G-1		1-1100	L16	X											/				
B6.40	B-G-1		1-1100	L17	X											/				
B6.40	B-G-1		1-1100	L18	X											/				
B6.40	B-G-1		1-1100	L19	X											/				
B6.40	B-G-1		1-1100	L20	X											/				
B6.40	B-G-1		1-1100	L21	X											/				
B6.40	B-G-1		1-1100	L22	X											/				
B6.40	B-G-1		1-1100	L23	X											/				
B6.40	B-G-1		1-1100	L24	X											/				
B6.40	B-G-1		1-1100	L25	X											/				
B6.40	B-G-1		1-1100	L26	X											/				
B6.40	B-G-1		1-1100	L27	X											/				
B6.40	B-G-1		1-1100	L28	X											/				
B6.40	B-G-1		1-1100	L29	X											/				
B6.40	B-G-1		1-1100	L30	X											/				
B6.40	B-G-1		1-1100	L31	X											/				
B6.40	B-G-1		1-1100	L32	X											/				
B6.40	B-G-1		1-1100	L33	X											/				
B6.40	B-G-1		1-1100	L34	X											/				
B6.40	B-G-1		1-1100	L35	X											/				
B6.40	B-G-1		1-1100	L36	X											/				
B6.40	B-G-1		1-1100	L37	X											/				
B6.40	B-G-1		1-1100	L38	X											/				
B6.40	B-G-1		1-1100	L39	X											/				

NSBU COMPONENT SURVEILLANCE SCHEDULE
Westinghouse Proprietary

COMPONENT: R.V. THREADS IN FLANGE

89	89		INT		EXAMINATION METHOD			FIRST INTERVAL			SECOND INTERVAL			THIRD INTERVAL			FOURTH INTERVAL			
ITEM NUMBER	CATEGORY NUMBER	DESCRIPTION	SKETCH NUMBER	IDENT. NUMBER	VOL.	SUR	VTS.	1ST	2ND	3RD	1ST	2ND	3RD	1ST	2ND	3RD	1ST	2ND	3RD	REMARKS
								PERIOD			PERIOD			PERIOD			PERIOD			
B6.40	B-G-1		1-1100	L40	X											/				
B6.40	B-G-1		1-1100	L41	X											/				
B6.40	B-G-1		1-1100	L42	X											/				
B6.40	B-G-1		1-1100	L43	X											/				
B6.40	B-G-1		1-1100	L44	X											/				
B6.40	B-G-1		1-1100	L45	X											/				
B6.40	B-G-1		1-1100	L46	X											/				
B6.40	B-G-1		1-1100	L47	X											/				
B6.40	B-G-1		1-1100	L48	X											/				
B6.40	B-G-1		1-1100	L49	X											/				
B6.40	B-G-1		1-1100	L50	X											/				
B6.40	B-G-1		1-1100	L51	X											/				
B6.40	B-G-1		1-1100	L52	X											/				
B6.40	B-G-1		1-1100	L53	X											/				
B6.40	B-G-1		1-1100	L54	X											/				
TOTAL ID'S FOR B6.40				54	54	0	0	TOTAL SCHEDULED						0	0	54				
								TOTAL COMPLETED						0	0	0				

NSBU COMPONENT SURVEILLANCE SCHEDULE

COMPONENT: R.V. CLOSURE WASHERS, BUSHINGS

89	89		INT		EXAMINATION METHOD			FIRST INTERVAL			SECOND INTERVAL			THIRD INTERVAL			FOURTH INTERVAL			
ITEM NUMBER	CATEGORY NUMBER	DESCRIPTION	SKETCH NUMBER	IDENT. NUMBER	VOL.	SUR	VIS.	1ST	2ND	3RD	1ST	2ND	3RD	1ST	2ND	3RD	1ST	2ND	3RD	REMARKS
								PERIOD			PERIOD			PERIOD			PERIOD			
B6.50	B-G-1		1-1400	W01			X							/						Reference Table 4.0
B6.50	B-G-1		1-1400	W02			X							/						VT-1
B6.50	B-G-1		1-1400	W03			X							/						
B6.50	B-G-1		1-1400	W04			X							/						
B6.50	B-G-1		1-1400	W05			X							/						
B6.50	B-G-1		1-1400	W06			X							/						
B6.50	B-G-1		1-1400	W07			X							/						
B6.50	B-G-1		1-1400	W08			X							/						
B6.50	B-G-1		1-1400	W09			X							/						
B6.50	B-G-1		1-1400	W10			X							/						
B6.50	B-G-1		1-1400	W11			X							/						
B6.50	B-G-1		1-1400	W12			X							/						
B6.50	B-G-1		1-1400	W13			X							/						
B6.50	B-G-1		1-1400	W14			X							/						
B6.50	B-G-1		1-1400	W15			X							/						
B6.50	B-G-1		1-1400	W16			X							/						
B6.50	B-G-1		1-1400	W17			X							/						
B6.50	B-G-1		1-1400	W18			X							/						
B6.50	B-G-1		1-1400	W19			X								/					
B6.50	B-G-1		1-1400	W20			X								/					
B6.50	B-G-1		1-1400	W21			X								/					
B6.50	B-G-1		1-1400	W22			X								/					
B6.50	B-G-1		1-1400	W23			X								/					
B6.50	B-G-1		1-1400	W24			X								/					
B6.50	B-G-1		1-1400	W25			X								/					
B6.50	B-G-1		1-1400	W26			X								/					
B6.50	B-G-1		1-1400	W27			X								/					
B6.50	B-G-1		1-1400	W28			X								/					
B6.50	B-G-1		1-1400	W29			X								/					
B6.50	B-G-1		1-1400	W30			X								/					
B6.50	B-G-1		1-1400	W31			X								/					
B6.50	B-G-1		1-1400	W32			X								/					
B6.50	B-G-1		1-1400	W33			X								/					
B6.50	B-G-1		1-1400	W34			X								/					
B6.50	B-G-1		1-1400	W35			X								/					

NSBU COMPONENT SURVEILLANCE SCHEDULE
Westinghouse Proprietary

COMPONENT: R.V. CLOSURE WASHERS, BUSHINGS

89	89		INT		EXAMINATION METHOD			FIRST INTERVAL			SECOND INTERVAL			THIRD INTERVAL			FOURTH INTERVAL			
ITEM NUMBER	CATEGORY NUMBER	DESCRIPTION	SKETCH NUMBER	IDENT. NUMBER	VOL.	SUR	VIS.	1ST	2ND	3RD	1ST	2ND	3RD	1ST	2ND	3RD	1ST	2ND	3RD	REMARKS
								PERIOD			PERIOD			PERIOD			PERIOD			
B6.50	B-G-1		1-1400	W36			X								/					
B6.50	B-G-1		1-1400	W37			X									/				
B6.50	B-G-1		1-1400	W38			X									/				
B6.50	B-G-1		1-1400	W39			X									/				
B6.50	B-G-1		1-1400	W40			X									/				
B6.50	B-G-1		1-1400	W41			X									/				
B6.50	B-G-1		1-1400	W42			X									/				
B6.50	B-G-1		1-1400	W43			X									/				
B6.50	B-G-1		1-1400	W-44			X									/				
B6.50	B-G-1		1-1400	W-45			X									/				
B6.50	B-G-1		1-1400	W-46			X									/				
B6.50	B-G-1		1-1400	W-47			X									/				
B6.50	B-G-1		1-1400	W-48			X									/				
B6.50	B-G-1		1-1400	W-49			X									/				
B6.50	B-G-1		1-1400	W-50			X									/				
B6.50	B-G-1		1-1400	W-51			X									/				
B6.50	B-G-1		1-1400	W-52			X									/				
B6.50	B-G-1		1-1400	W-53			X									/				
B6.50	B-G-1		1-1400	W-54			X									/				
TOTAL ID'S FOR B6.50				54	0	0	54	TOTAL SCHEDULED						18	18	18				
								TOTAL COMPLETED						0	0	0				

NSBU COMPONENT SURVEILLANCE SCHEDULE
Westinghouse Proprietary

COMPONENT: PUMP BOLTS AND STUDS MAIN FLANGE

89	89		INT		EXAMINATION METHOD			FIRST INTERVAL			SECOND INTERVAL			THIRD INTERVAL			FOURTH INTERVAL			
ITEM NUMBER	CATEGORY NUMBER	DESCRIPTION	SKETCH NUMBER	IDENT. NUMBER	VOL.	SUR	VIS.	1ST	2ND	3RD	1ST	2ND	3RD	1ST	2ND	3RD	1ST	2ND	3RD	REMARKS
								PERIOD			PERIOD			PERIOD			PERIOD			
B6.180	B-G-1		1-5100	31-B01	X										/					REFERENCE TABLE 4.0
B6.180	B-G-1		1-5100	31-B02	X										/					
B6.180	B-G-1		1-5100	31-B03	X										/					
B6.180	B-G-1		1-5100	31-B04	X										/					
B6.180	B-G-1		1-5100	31-B05	X										/					
B6.180	B-G-1		1-5100	31-B06	X										/					
B6.180	B-G-1		1-5100	31-B07	X										/					
B6.180	B-G-1		1-5100	31-B08	X										/					
B6.180	B-G-1		1-5100	31-B09	X										/					
B6.180	B-G-1		1-5100	31-B10	X										/					
B6.180	B-G-1		1-5100	31-B11	X										/					
B6.180	B-G-1		1-5100	31-B12	X										/					
B6.180	B-G-1		1-5100	31-B13	X										/					
B6.180	B-G-1		1-5100	31-B14	X										/					
B6.180	B-G-1		1-5100	31-B15	X										/					
B6.180	B-G-1		1-5100	31-B16	X										/					
B6.180	B-G-1		1-5100	31-B17	X										/					
B6.180	B-G-1		1-5100	31-B18	X										/					
B6.180	B-G-1		1-5100	31-B19	X										/					
B6.180	B-G-1		1-5100	31-B20	X										/					
B6.180	B-G-1		1-5100	31-B21	X										/					
B6.180	B-G-1		1-5100	31-B22	X										/					
B6.180	B-G-1		1-5100	31-B23	X										/					
B6.180	B-G-1		1-5100	31-B24	X										/					
B6.180	B-G-1		1-5100	32-B01	X															
B6.180	B-G-1		1-5100	32-B02	X															
B6.180	B-G-1		1-5100	32-B03	X															
B6.180	B-G-1		1-5100	32-B04	X															
B6.180	B-G-1		1-5100	32-B05	X															
B6.180	B-G-1		1-5100	32-B06	X															
B6.180	B-G-1		1-5100	32-B07	X															
B6.180	B-G-1		1-5100	32-B08	X															
B6.180	B-G-1		1-5100	32-B09	X															
B6.180	B-G-1		1-5100	32-B10	X															

NSBU COMPONENT SURVEILLANCE SCHEDULE
Westinghouse Proprietary

COMPONENT: PUMP BOLTS AND STUDS MAIN FLANGE

89	89		INT		EXAMINATION METHOD			FIRST INTERVAL			SECOND INTERVAL			THIRD INTERVAL			FOURTH INTERVAL			
ITEM NUMBER	CATEGORY NUMBER	DESCRIPTION	SKETCH NUMBER	IDENT. NUMBER	VOL.	SUR	VIS.	1ST	2ND	3RD	1ST	2ND	3RD	1ST	2ND	3RD	1ST	2ND	3RD	REMARKS
								PERIOD			PERIOD			PERIOD			PERIOD			
B6.180	B-G-1		1-5100	32-B11	X															
B6.180	B-G-1		1-5100	32-B12	X															
B6.180	B-G-1		1-5100	32-B13	X															
B6.180	B-G-1		1-5100	32-B14	X															
B6.180	B-G-1		1-5100	32-B15	X															
B6.180	B-G-1		1-5100	32-B16	X															
B6.180	B-G-1		1-5100	32-B17	X															
B6.180	B-G-1		1-5100	32-B18	X															
B6.180	B-G-1		1-5100	32-B19	X															
B6.180	B-G-1		1-5100	32-B20	X															
B6.180	B-G-1		1-5100	32-B21	X															
B6.180	B-G-1		1-5100	32-B22	X															
B6.180	B-G-1		1-5100	32-B23	X															
B6.180	B-G-1		1-5100	32-B24	X															
B6.180	B-G-1		1-5100	33-B01	X															
B6.180	B-G-1		1-5100	33-B02	X															
B6.180	B-G-1		1-5100	33-B03	X															
B6.180	B-G-1		1-5100	33-B04	X															
B6.180	B-G-1		1-5100	33-B05	X															
B6.180	B-G-1		1-5100	33-B06	X															
B6.180	B-G-1		1-5100	33-B07	X															
B6.180	B-G-1		1-5100	33-B08	X															
B6.180	B-G-1		1-5100	33-B09	X															
B6.180	B-G-1		1-5100	33-B10	X															
B6.180	B-G-1		1-5100	33-B11	X															
B6.180	B-G-1		1-5100	33-B12	X															
B6.180	B-G-1		1-5100	33-B13	X															
B6.180	B-G-1		1-5100	33-B14	X															
B6.180	B-G-1		1-5100	33-B15	X															
B6.180	B-G-1		1-5100	33-B16	X															
B6.180	B-G-1		1-5100	33-B17	X															
B6.180	B-G-1		1-5100	33-B18	X															
B6.180	B-G-1		1-5100	33-B19	X															
B6.180	B-G-1		1-5100	33-B20	X															
B6.180	B-G-1		1-5100	33-B21	X															
B6.180	B-G-1		1-5100	33-B22	X															

NSBU COMPONENT SURVEILLANCE SCHEDULE
Westinghouse Proprietary

COMPONENT: PUMP BOLTS AND STUDS MAIN FLANGE

89	89		INT		EXAMINATION METHOD			FIRST INTERVAL			SECOND INTERVAL			THIRD INTERVAL			FOURTH INTERVAL			
ITEM NUMBER	CATEGORY NUMBER	DESCRIPTION	SKETCH NUMBER	IDENT. NUMBER	VOL.	SUR	VIS.	1ST	2ND	3RD	1ST	2ND	3RD	1ST	2ND	3RD	1ST	2ND	3RD	REMARKS
								PERIOD			PERIOD			PERIOD			PERIOD			
B6.180	B-G-1		1-5100	33-B23	X															
B6.180	B-G-1		1-5100	33-B24	X															
B6.180	B-G-1		1-5100	34-B01	X															
B6.180	B-G-1		1-5100	34-B02	X															
B6.180	B-G-1		1-5100	34-B03	X															
B6.180	B-G-1		1-5100	34-B04	X															
B6.180	B-G-1		1-5100	34-B05	X															
B6.180	B-G-1		1-5100	34-B06	X															
B6.180	B-G-1		1-5100	34-B07	X															
B6.180	B-G-1		1-5100	34-B08	X															
B6.180	B-G-1		1-5100	34-B09	X															
B6.180	B-G-1		1-5100	34-B10	X															
B6.180	B-G-1		1-5100	34-B11	X															
B6.180	B-G-1		1-5100	34-B12	X															
B6.180	B-G-1		1-5100	34-B13	X															
B6.180	B-G-1		1-5100	34-B14	X															
B6.180	B-G-1		1-5100	34-B15	X															
B6.180	B-G-1		1-5100	34-B16	X															
B6.180	B-G-1		1-5100	34-B17	X															
B6.180	B-G-1		1-5100	34-B18	X															
B6.180	B-G-1		1-5100	34-B19	X															
B6.180	B-G-1		1-5100	34-B20	X															
B6.180	B-G-1		1-5100	34-B21	X															
B6.180	B-G-1		1-5100	34-B22	X															
B6.180	B-G-1		1-5100	34-B23	X															
B6.180	B-G-1		1-5100	34-B24	X															
TOTAL ID'S FOR B6.180				96	96	0	0	TOTAL SCHEDULED						0	24	0				
								TOTAL COMPLETED						0	0	0				

NSBU COMPONENT SURVEILLANCE SCHEDULE
Westinghouse Proprietary

COMPONENT: PUMP FLANGE SURFACE WHEN DISASSEMBLED

89	89		INT		EXAMINATION METHOD			FIRST INTERVAL			SECOND INTERVAL			THIRD INTERVAL			FOURTH INTERVAL			
ITEM NUMBER	CATEGORY NUMBER	DESCRIPTION	SKETCH NUMBER	IDENT. NUMBER	VOL.	SUR	VIS.	1ST	2ND	3RD	1ST	2ND	3RD	1ST	2ND	3RD	1ST	2ND	3RD	REMARKS
								PERIOD			PERIOD			PERIOD			PERIOD			
B6.190	B-G-1		1-5100	1-F1			X													VT-1, ONLY WHEN
B6.190	B-G-1		1-5100	2-F1			X													DISASSEMBLED
B6.190	B-G-1		1-5100	3-F1			X													REFERENCE TABLE 4.0
B6.190	B-G-1		1-5100	4-F1			X													
TOTAL ID'S FOR B6.190				4	0	0	4	TOTAL SCHEDULED						0	0	0				
								TOTAL COMPLETED						0	0	0				

NSBU COMPONENT SURVEILLANCE SCHEDULE
Westinghouse Proprietary

COMPONENT: PUMPS NUTS, BUSHING, AND WASHERS

89	89		INT		EXAMINATION METHOD			FIRST INTERVAL			SECOND INTERVAL			THIRD INTERVAL			FOURTH INTERVAL			
ITEM NUMBER	CATEGORY NUMBER	DESCRIPTION	SKETCH NUMBER	IDENT. NUMBER	VOL.	SUR	VIS.	1ST	2ND	3RD	1ST	2ND	3RD	1ST	2ND	3RD	1ST	2ND	3RD	REMARKS
								PERIOD			PERIOD			PERIOD			PERIOD			
B6.200	B-G-1		1-5100	31-B01N			X								/					Reference Table 4.0
B6.200	B-G-1		1-5100	31-B02N			X								/					VT-1
B6.200	B-G-1		1-5100	31-B03N			X								/					
B6.200	B-G-1		1-5100	31-B04N			X								/					
B6.200	B-G-1		1-5100	31-B05N			X								/					
B6.200	B-G-1		1-5100	31-B06N			X								/					
B6.200	B-G-1		1-5100	31-B07N			X								/					
B6.200	B-G-1		1-5100	31-B08N			X								/					
B6.200	B-G-1		1-5100	31-B09N			X								/					
B6.200	B-G-1		1-5100	31-B10N			X								/					
B6.200	B-G-1		1-5100	31-B11N			X								/					
B6.200	B-G-1		1-5100	31-B12N			X								/					
B6.200	B-G-1		1-5100	31-B13N			X								/					
B6.200	B-G-1		1-5100	31-B14N			X								/					
B6.200	B-G-1		1-5100	31-B15N			X								/					
B6.200	B-G-1		1-5100	31-B16N			X								/					
B6.200	B-G-1		1-5100	31-B17N			X								/					
B6.200	B-G-1		1-5100	31-B18N			X								/					
B6.200	B-G-1		1-5100	31-B19N			X								/					
B6.200	B-G-1		1-5100	31-B20N			X								/					
B6.200	B-G-1		1-5100	31-B21N			X								/					
B6.200	B-G-1		1-5100	31-B22N			X								/					
B6.200	B-G-1		1-5100	31-B23N			X								/					
B6.200	B-G-1		1-5100	31-B24N			X								/					
B6.200	B-G-1		1-5100	32-B01N			X													
B6.200	B-G-1		1-5100	32-B02N			X													
B6.200	B-G-1		1-5100	32-B03N			X													
B6.200	B-G-1		1-5100	32-B04N			X													
B6.200	B-G-1		1-5100	32-B05N			X													
B6.200	B-G-1		1-5100	32-B06N			X													
B6.200	B-G-1		1-5100	32-B07N			X													
B6.200	B-G-1		1-5100	32-B08N			X													
B6.200	B-G-1		1-5100	32-B09N			X													
B6.200	B-G-1		1-5100	32-B10N			X													

NSBU COMPONENT SURVEILLANCE SCHEDULE

COMPONENT: PUMPS NUTS, BUSHING, AND WASHERS

89	89		INT		EXAMINATION METHOD			FIRST INTERVAL			SECOND INTERVAL			THIRD INTERVAL			FOURTH INTERVAL			
ITEM NUMBER	CATEGORY NUMBER	DESCRIPTION	SKETCH NUMBER	IDENT. NUMBER	VOL.	SUR	VIS.	1ST	2ND	3RD	1ST	2ND	3RD	1ST	2ND	3RD	1ST	2ND	3RD	REMARKS
								PERIOD			PERIOD			PERIOD			PERIOD			
B6.200	B-G-1		1-5100	32-B11N			X													
B6.200	B-G-1		1-5100	32-B12N			X													
B6.200	B-G-1		1-5100	32-B13N			X													
B6.200	B-G-1		1-5100	32-B14N			X													
B6.200	B-G-1		1-5100	32-B15N			X													
B6.200	B-G-1		1-5100	32-B16N			X													
B6.200	B-G-1		1-5100	32-B17N			X													
B6.200	B-G-1		1-5100	32-B18N			X													
B6.200	B-G-1		1-5100	32-B19N			X													
B6.200	B-G-1		1-5100	32-B20N			X													
B6.200	B-G-1		1-5100	32-B21N			X													
B6.200	B-G-1		1-5100	32-B22N			X													
B6.200	B-G-1		1-5100	32-B23N			X													
B6.200	B-G-1		1-5100	32-B24N			X													
B6.200	B-G-1		1-5100	33-B01N			X													
B6.200	B-G-1		1-5100	33-B02N			X													
B6.200	B-G-1		1-5100	33-B03N			X													
B6.200	B-G-1		1-5100	33-B04N			X													
B6.200	B-G-1		1-5100	33-B05N			X													
B6.200	B-G-1		1-5100	33-B06N			X													
B6.200	B-G-1		1-5100	33-B07N			X													
B6.200	B-G-1		1-5100	33-B08N			X													
B6.200	B-G-1		1-5100	33-B09N			X													
B6.200	B-G-1		1-5100	33-B10N			X													
B6.200	B-G-1		1-5100	33-B11N			X													
B6.200	B-G-1		1-5100	33-B12N			X													
B6.200	B-G-1		1-5100	33-B13N			X													
B6.200	B-G-1		1-5100	33-B14N			X													
B6.200	B-G-1		1-5100	33-B15N			X													
B6.200	B-G-1		1-5100	33-B16N			X													
B6.200	B-G-1		1-5100	33-B17N			X													
B6.200	B-G-1		1-5100	33-B18N			X													
B6.200	B-G-1		1-5100	33-B19N			X													
B6.200	B-G-1		1-5100	33-B20N			X													
B6.200	B-G-1		1-5100	33-B21N			X													
B6.200	B-G-1		1-5100	33-B22N			X													

NSBU COMPONENT SURVEILLANCE SCHEDULE
Westinghouse Proprietary

COMPONENT: PUMPS NUTS, BUSHING, AND WASHERS

89	89		INT		EXAMINATION METHOD			FIRST INTERVAL			SECOND INTERVAL			THIRD INTERVAL			FOURTH INTERVAL			
ITEM NUMBER	CATEGORY NUMBER	DESCRIPTION	SKETCH NUMBER	IDENT. NUMBER	VOL.	SUR	VIS.	1ST	2ND	3RD	1ST	2ND	3RD	1ST	2ND	3RD	1ST	2ND	3RD	REMARKS
								PERIOD			PERIOD			PERIOD			PERIOD			
B6.200	B-G-1		1-5100	33-B23N			X													
B6.200	B-G-1		1-5100	33-B24N			X													
B6.200	B-G-1		1-5100	34-B01N			X													
B6.200	B-G-1		1-5100	34-B02N			X													
B6.200	B-G-1		1-5100	34-B03N			X													
B6.200	B-G-1		1-5100	34-B04N			X													
B6.200	B-G-1		1-5100	34-B05N			X													
B6.200	B-G-1		1-5100	34-B06N			X													
B6.200	B-G-1		1-5100	34-B07N			X													
B6.200	B-G-1		1-5100	34-B08N			X													
B6.200	B-G-1		1-5100	34-B09N			X													
B6.200	B-G-1		1-5100	34-B10N			X													
B6.200	B-G-1		1-5100	34-B11N			X													
B6.200	B-G-1		1-5100	34-B12N			X													
B6.200	B-G-1		1-5100	34-B13N			X													
B6.200	B-G-1		1-5100	34-B14N			X													
B6.200	B-G-1		1-5100	34-B15N			X													
B6.200	B-G-1		1-5100	34-B16N			X													
B6.200	B-G-1		1-5100	34-B17N			X													
B6.200	B-G-1		1-5100	34-B18N			X													
B6.200	B-G-1		1-5100	34-B19N			X													
B6.200	B-G-1		1-5100	34-B20N			X													
B6.200	B-G-1		1-5100	34-B21N			X													
B6.200	B-G-1		1-5100	34-B22N			X													
B6.200	B-G-1		1-5100	34-B23N			X													
B6.200	B-G-1		1-5100	34-B24N			X													
TOTAL ID'S FOR B6.200				96	0	0	96	TOTAL SCHEDULED						0	24	0				
								TOTAL COMPLETED						0	0	0				

NSBU COMPONENT SURVEILLANCE SCHEDULE
Westinghouse Proprietary

COMPONENT: PRESSURIZER - BOLTS, STUDS, AND NUTS

89	89		INT		EXAMINATION METHOD			FIRST INTERVAL			SECOND INTERVAL			THIRD INTERVAL			FOURTH INTERVAL			
ITEM NUMBER	CATEGORY NUMBER	DESCRIPTION	SKETCH NUMBER	IDENT. NUMBER	VOL.	SUR	VIS.	1ST	2ND	3RD	1ST	2ND	3RD	1ST	2ND	3RD	1ST	2ND	3RD	REMARKS
								PERIOD			PERIOD			PERIOD			PERIOD			
B7.20	B-G-2		1-2100	B01			X									/				Reference Table 4.0
B7.20	B-G-2		1-2100	B02			X									/				VT-1
B7.20	B-G-2		1-2100	B03			X									/				
B7.20	B-G-2		1-2100	B04			X									/				
B7.20	B-G-2		1-2100	B05			X									/				
B7.20	B-G-2		1-2100	B06			X									/				
B7.20	B-G-2		1-2100	B07			X									/				
B7.20	B-G-2		1-2100	B08			X									/				
B7.20	B-G-2		1-2100	B09			X									/				
B7.20	B-G-2		1-2100	B010			X									/				
B7.20	B-G-2		1-2100	B011			X									/				
B7.20	B-G-2		1-2100	B012			X									/				
B7.20	B-G-2		1-2100	B013			X									/				
B7.20	B-G-2		1-2100	B014			X									/				
B7.20	B-G-2		1-2100	B015			X									/				
B7.20	B-G-2		1-2100	B016			X									/				
TOTAL ID'S FOR B7.20				16	0	0	16	TOTAL SCHEDULED						0	0	16				
								TOTAL COMPLETED						0	0	0				

NSBU COMPONENT SURVEILLANCE SCHEDULE
Westinghouse Proprietary

COMPONENT: STM, GEN. BOLTS, STUDS, AND NUTS

89	89		INT		EXAMINATION METHOD			FIRST INTERVAL			SECOND INTERVAL			THIRD INTERVAL			FOURTH INTERVAL			
ITEM NUMBER	CATEGORY NUMBER	DESCRIPTION	SKETCH NUMBER	IDENT. NUMBER	VOL.	SUR	VIS.	1ST	2ND	3RD	1ST	2ND	3RD	1ST	2ND	3RD	1ST	2ND	3RD	REMARKS
								PERIOD			PERIOD			PERIOD			PERIOD			
B7.30	B-G-2		1-3101	31-HL-B01			X								/					HOT LEG MANWAY
B7.30	B-G-2		1-3101	31-HL-B02			X								/					HOT LEG MANWAY
B7.30	B-G-2		1-3101	31-HL-B03			X								/					HOT LEG MANWAY
B7.30	B-G-2		1-3101	31-HL-B04			X								/					HOT LEG MANWAY
B7.30	B-G-2		1-3101	31-HL-B05			X								/					HOT LEG MANWAY
B7.30	B-G-2		1-3101	31-HL-B06			X								/					HOT LEG MANWAY
B7.30	B-G-2		1-3101	31-HL-B07			X								/					HOT LEG MANWAY
B7.30	B-G-2		1-3101	31-HL-B08			X								/					HOT LEG MANWAY
B7.30	B-G-2		1-3101	31-HL-B09			X								/					HOT LEG MANWAY
B7.30	B-G-2		1-3101	31-HL-B10			X								/					HOT LEG MANWAY
B7.30	B-G-2		1-3101	31-HL-B11			X								/					HOT LEG MANWAY
B7.30	B-G-2		1-3101	31-HL-B12			X								/					HOT LEG MANWAY
B7.30	B-G-2		1-3101	31-HL-B13			X								/					HOT LEG MANWAY
B7.30	B-G-2		1-3101	31-HL-B14			X								/					HOT LEG MANWAY
B7.30	B-G-2		1-3101	31-HL-B15			X								/					HOT LEG MANWAY
B7.30	B-G-2		1-3101	31-HL-B16			X								/					HOT LEG MANWAY
B7.30	B-G-2		1-3101	31-CL-B01			X								/					COLD LEG MANWAY
B7.30	B-G-2		1-3101	31-CL-B02			X								/					COLD LEG MANWAY
B7.30	B-G-2		1-3101	31-CL-B03			X								/					COLD LEG MANWAY
B7.30	B-G-2		1-3101	31-CL-B04			X								/					COLD LEG MANWAY
B7.30	B-G-2		1-3101	31-CL-B05			X								/					COLD LEG MANWAY
B7.30	B-G-2		1-3101	31-CL-B06			X								/					COLD LEG MANWAY
B7.30	B-G-2		1-3101	31-CL-B07			X								/					COLD LEG MANWAY
B7.30	B-G-2		1-3101	31-CL-B08			X								/					COLD LEG MANWAY
B7.30	B-G-2		1-3101	31-CL-B09			X								/					COLD LEG MANWAY
B7.30	B-G-2		1-3101	31-CL-B10			X								/					COLD LEG MANWAY
B7.30	B-G-2		1-3101	31-CL-B11			X								/					COLD LEG MANWAY
B7.30	B-G-2		1-3101	31-CL-B12			X								/					COLD LEG MANWAY
B7.30	B-G-2		1-3101	31-CL-B13			X								/					COLD LEG MANWAY
B7.30	B-G-2		1-3101	31-CL-B14			X								/					COLD LEG MANWAY
B7.30	B-G-2		1-3101	31-CL-B15			X								/					COLD LEG MANWAY
B7.30	B-G-2		1-3101	31-CL-B16			X								/					COLD LEG MANWAY
B7.30	B-G-2		1-3101	32-HL-B01			X													HOT LEG MANWAY
B7.30	B-G-2		1-3101	32-HL-B02			X													HOT LEG MANWAY

NSBU COMPONENT SURVEILLANCE SCHEDULE

COMPONENT: STM, GEN. BOLTS, STUDS, AND NUTS

89	89		INT		EXAMINATION METHOD			FIRST INTERVAL			SECOND INTERVAL			THIRD INTERVAL			FOURTH INTERVAL			
ITEM NUMBER	CATEGORY NUMBER	DESCRIPTION	SKETCH NUMBER	IDENT. NUMBER	VOL.	SUR	VIS.	1ST	2ND	3RD	1ST	2ND	3RD	1ST	2ND	3RD	1ST	2ND	3RD	REMARKS
								PERIOD			PERIOD			PERIOD			PERIOD			
B7.30	B-G-2		1-3101	32-HL-B03			X													HOT LEG MANWAY
B7.30	B-G-2		1-3101	32-HL-B04			X													HOT LEG MANWAY
B7.30	B-G-2		1-3101	32-HL-B05			X													HOT LEG MANWAY
B7.30	B-G-2		1-3101	32-HL-B06																HOT LEG MANWAY
B7.30	B-G-2		1-3101	32-HL-B07			X													HOT LEG MANWAY
B7.30	B-G-2		1-3101	32-HL-B08			X													HOT LEG MANWAY
B7.30	B-G-2		1-3101	32-HL-B09			X													HOT LEG MANWAY
B7.30	B-G-2		1-3101	32-HL-B10			X													HOT LEG MANWAY
B7.30	B-G-2		1-3101	32-HL-B11			X													HOT LEG MANWAY
B7.30	B-G-2		1-3101	32-HL-B12			X													HOT LEG MANWAY
B7.30	B-G-2		1-3101	32-HL-B13			X													HOT LEG MANWAY
B7.30	B-G-2		1-3101	32-HL-B14			X													HOT LEG MANWAY
B7.30	B-G-2		1-3101	32-HL-B15			X													HOT LEG MANWAY
B7.30	B-G-2		1-3101	32-HL-B16			X													HOT LEG MANWAY
B7.30	B-G-2		1-3101	32-CL-B01			X													COLD LEG MANWAY
B7.30	B-G-2		1-3101	32-CL-B02			X													COLD LEG MANWAY
B7.30	B-G-2		1-3101	32-CL-B03			X													COLD LEG MANWAY
B7.30	B-G-2		1-3101	32-CL-B04			X													COLD LEG MANWAY
B7.30	B-G-2		1-3101	32-CL-B05			X													COLD LEG MANWAY
B7.30	B-G-2		1-3101	32-CL-B06			X													COLD LEG MANWAY
B7.30	B-G-2		1-3101	32-CL-B07			X													COLD LEG MANWAY
B7.30	B-G-2		1-3101	32-CL-B08			X													COLD LEG MANWAY
B7.30	B-G-2		1-3101	32-CL-B09			X													COLD LEG MANWAY
B7.30	B-G-2		1-3101	32-CL-B10			X													COLD LEG MANWAY
B7.30	B-G-2		1-3101	32-CL-B11			X													COLD LEG MANWAY
B7.30	B-G-2		1-3101	32-CL-B12			X													COLD LEG MANWAY
B7.30	B-G-2		1-3101	32-CL-B13			X													COLD LEG MANWAY
B7.30	B-G-2		1-3101	32-CL-B14			X													COLD LEG MANWAY
B7.30	B-G-2		1-3101	32-CL-B15			X													COLD LEG MANWAY
B7.30	B-G-2		1-3101	32-CL-B16			X													COLD LEG MANWAY
B7.30	B-G-2		1-3101	33-HL-B01			X													HOT LEG MANWAY
B7.30	B-G-2		1-3101	33-HL-B02			X													HOT LEG MANWAY
B7.30	B-G-2		1-3101	33-HL-B03			X													HOT LEG MANWAY
B7.30	B-G-2		1-3101	33-HL-B04			X													HOT LEG MANWAY
B7.30	B-G-2		1-3101	33-HL-B05			X													HOT LEG MANWAY

NSBU COMPONENT SURVEILLANCE SCHEDULE
Westinghouse Proprietary

COMPONENT: STM, GEN. BOLTS, STUDS, AND NUTS

89	89		INT		EXAMINATION METHOD			FIRST INTERVAL			SECOND INTERVAL			THIRD INTERVAL			FOURTH INTERVAL			
ITEM NUMBER	CATEGORY NUMBER	DESCRIPTION	SKETCH NUMBER	IDENT. NUMBER	VOL.	SUR	VIS.	1ST	2ND	3RD	1ST	2ND	3RD	1ST	2ND	3RD	1ST	2ND	3RD	REMARKS
								PERIOD			PERIOD			PERIOD			PERIOD			
B7.30	B-G-2		1-3101	33-HL-B06			X													HOT LEG MANWAY
B7.30	B-G-2		1-3101	33-HL-B07			X													HOT LEG MANWAY
B7.30	B-G-2		1-3101	33-HL-B08			X													HOT LEG MANWAY
B7.30	B-G-2		1-3101	33-HL-B09			X													HOT LEG MANWAY
B7.30	B-G-2		1-3101	33-HL-B10			X													HOT LEG MANWAY
B7.30	B-G-2		1-3101	33-HL-B11			X													HOT LEG MANWAY
B7.30	B-G-2		1-3101	33-HL-B12			X													HOT LEG MANWAY
B7.30	B-G-2		1-3101	33-HL-B13			X													HOT LEG MANWAY
B7.30	B-G-2		1-3101	33-HL-B14			X													HOT LEG MANWAY
B7.30	B-G-2		1-3101	33-HL-B15			X													HOT LEG MANWAY
B7.30	B-G-2		1-3101	33-HL-B16			X													HOT LEG MANWAY
B7.30	B-G-2		1-3101	33-CL-B01			X													COLD LEG MANWAY
B7.30	B-G-2		1-3101	33-CL-B02			X													COLD LEG MANWAY
B7.30	B-G-2		1-3101	33-CL-B03			X													COLD LEG MANWAY
B7.30	B-G-2		1-3101	33-CL-B04			X													COLD LEG MANWAY
B7.30	B-G-2		1-3101	33-CL-B05			X													COLD LEG MANWAY
B7.30	B-G-2		1-3101	33-CL-B06			X													COLD LEG MANWAY
B7.30	B-G-2		1-3101	33-CL-B07			X													COLD LEG MANWAY
B7.30	B-G-2		1-3101	33-CL-B08			X													COLD LEG MANWAY
B7.30	B-G-2		1-3101	33-CL-B09			X													COLD LEG MANWAY
B7.30	B-G-2		1-3101	33-CL-B10			X													COLD LEG MANWAY
B7.30	B-G-2		1-3101	33-CL-B11			X													COLD LEG MANWAY
B7.30	B-G-2		1-3101	33-CL-B12			X													COLD LEG MANWAY
B7.30	B-G-2		1-3101	33-CL-B13			X													COLD LEG MANWAY
B7.30	B-G-2		1-3101	33-CL-B14			X													COLD LEG MANWAY
B7.30	B-G-2		1-3101	33-CL-B15			X													COLD LEG MANWAY
B7.30	B-G-2		1-3101	33-CL-B16			X													COLD LEG MANWAY
B7.30	B-G-2		1-3101	34-HL-B01			X													HOT LEG MANWAY
B7.30	B-G-2		1-3101	34-HL-B02			X													HOT LEG MANWAY
B7.30	B-G-2		1-3101	34-HL-B03			X													HOT LEG MANWAY
B7.30	B-G-2		1-3101	34-HL-B04			X													HOT LEG MANWAY
B7.30	B-G-2		1-3101	34-HL-B05			X													HOT LEG MANWAY
B7.30	B-G-2		1-3101	34-HL-B06			X													HOT LEG MANWAY
B7.30	B-G-2		1-3101	34-HL-B07			X													HOT LEG MANWAY
B7.30	B-G-2		1-3101	34-HL-B08			X													HOT LEG MANWAY

NSBU COMPONENT SURVEILLANCE SCHEDULE
Westinghouse Proprietary

COMPONENT: STM, GEN. BOLTS, STUDS, AND NUTS

89	89		INT		EXAMINATION METHOD			FIRST INTERVAL			SECOND INTERVAL			THIRD INTERVAL			FOURTH INTERVAL			
ITEM NUMBER	CATEGORY NUMBER	DESCRIPTION	SKETCH NUMBER	IDENT. NUMBER	VOL.	SUR	VIS.	1ST	2ND	3RD	1ST	2ND	3RD	1ST	2ND	3RD	1ST	2ND	3RD	REMARKS
								PERIOD			PERIOD			PERIOD			PERIOD			
B7.30	B-G-2		1-3101	34-HL-B09			X													HOT LEG MANWAY
B7.30	B-G-2		1-3101	34-HL-B10			X													HOT LEG MANWAY
B7.30	B-G-2		1-3101	34-HL-B11			X													HOT LEG MANWAY
B7.30	B-G-2		1-3101	34-HL-B12			X													HOT LEG MANWAY
B7.30	B-G-2		1-3101	34-HL-B13			X													HOT LEG MANWAY
B7.30	B-G-2		1-3101	34-HL-B14			X													HOT LEG MANWAY
B7.30	B-G-2		1-3101	34-HL-B15			X													HOT LEG MANWAY
B7.30	B-G-2		1-3101	34-HL-B16			X													HOT LEG MANWAY
B7.30	B-G-2		1-3101	34-CL-B01			X													COLD LEG MANWAY
B7.30	B-G-2		1-3101	34-CL-B02			X													COLD LEG MANWAY
B7.30	B-G-2		1-3101	34-CL-B03			X													COLD LEG MANWAY
B7.30	B-G-2		1-3101	34-CL-B04			X													COLD LEG MANWAY
B7.30	B-G-2		1-3101	34-CL-B05			X													COLD LEG MANWAY
B7.30	B-G-2		1-3101	34-CL-B06			X													COLD LEG MANWAY
B7.30	B-G-2		1-3101	34-CL-B07			X													COLD LEG MANWAY
B7.30	B-G-2		1-3101	34-CL-B08			X													COLD LEG MANWAY
B7.30	B-G-2		1-3101	34-CL-B09			X													COLD LEG MANWAY
B7.30	B-G-2		1-3101	34-CL-B10			X													COLD LEG MANWAY
B7.30	B-G-2		1-3101	34-CL-B11			X													COLD LEG MANWAY
B7.30	B-G-2		1-3101	34-CL-B12			X													COLD LEG MANWAY
B7.30	B-G-2		1-3101	34-CL-B13			X													COLD LEG MANWAY
B7.30	B-G-2		1-3101	34-CL-B14			X													COLD LEG MANWAY
B7.30	B-G-2		1-3101	34-CL-B15			X													COLD LEG MANWAY
B7.30	B-G-2		1-3101	34-CL-B16			X													COLD LEG MANWAY
TOTAL ID'S FOR B7.30				128	0	0	127	TOTAL SCHEDULED						0	32	0				
								TOTAL COMPLETED						0	0	0				

NSBU COMPONENT SURVEILLANCE SCHEDULE
Westinghouse Proprietary

COMPONENT: PIPING BOLTS, STUDS, AND NUTS

89	89		INT		EXAMINATION METHOD			FIRST INTERVAL			SECOND INTERVAL			THIRD INTERVAL			FOURTH INTERVAL			
ITEM NUMBER	CATEGORY NUMBER	DESCRIPTION	SKETCH NUMBER	IDENT. NUMBER	VOL.	SUR	VIS.	1ST	2ND	3RD	1ST	2ND	3RD	1ST	2ND	3RD	1ST	2ND	3RD	REMARKS
								PERIOD			PERIOD			PERIOD			PERIOD			
B7.50	B-G-2		1-4108	FLANGE A			X								/					Reference Table 4.0 VT-1
B7.50	B-G-2		1-4208	FLANGE A			X													
B7.50	B-G-2		1-4307	FLANGE A			X													
B7.50	B-G-2		1-4407	FLANGE A			X													
B7.50	B-G-2		1-4501	FLANGE A			X							/						
B7.50	B-G-2		1-4502	FLANGE A			X													
B7.50	B-G-2		1-4503	FLANGE A			X													
TOTAL ID'S FOR B7.50				7	0	0	7	TOTAL SCHEDULED						1	1	0				
								TOTAL COMPLETED						0	0	0				

NSBU COMPONENT SURVEILLANCE SCHEDULE
Westinghouse Proprietary

COMPONENT: PUMP BOLTS, STUDS, AND NUTS SEAL HOUSE

89	89		INT		EXAMINATION METHOD			FIRST INTERVAL			SECOND INTERVAL			THIRD INTERVAL			FOURTH INTERVAL			
ITEM NUMBER	CATEGORY NUMBER	DESCRIPTION	SKETCH NUMBER	IDENT. NUMBER	VOL.	SUR	VIS.	1ST	2ND	3RD	1ST	2ND	3RD	1ST	2ND	3RD	1ST	2ND	3RD	REMARKS
								PERIOD			PERIOD			PERIOD			PERIOD			
B7.60	B-G-2		1-5100	31-B01SH			X							/						Reference Table 4.0
B7.60	B-G-2		1-5100	31-B02SH			X							/						VT-1
B7.60	B-G-2		1-5100	31-B03SH			X							/						
B7.60	B-G-2		1-5100	31-B04SH			X							/						
B7.60	B-G-2		1-5100	31-B05SH			X							/						
B7.60	B-G-2		1-5100	31-B06SH			X							/						
B7.60	B-G-2		1-5100	31-B07SH			X							/						
B7.60	B-G-2		1-5100	31-B08SH			X							/						
B7.60	B-G-2		1-5100	31-B09SH			X							/						
B7.60	B-G-2		1-5100	31-B10SH			X							/						
B7.60	B-G-2		1-5100	31-B11SH			X							/						
B7.60	B-G-2		1-5100	31-B12SH			X							/						
B7.60	B-G-2		1-5100	31-B13SH			X							/						
B7.60	B-G-2		1-5100	31-B14SH			X							/						
B7.60	B-G-2		1-5100	31-B15SH			X							/						
B7.60	B-G-2		1-5100	31-B16SH			X							/						
B7.60	B-G-2		1-5100	31-B17SH			X							/						
B7.60	B-G-2		1-5100	31-B18SH			X							/						
B7.60	B-G-2		1-5100	32-B01SH			X													
B7.60	B-G-2		1-5100	32-B02SH			X													
B7.60	B-G-2		1-5100	32-B03SH			X													
B7.60	B-G-2		1-5100	32-B04SH			X													
B7.60	B-G-2		1-5100	32-B05SH			X													
B7.60	B-G-2		1-5100	32-B06SH			X													
B7.60	B-G-2		1-5100	32-B07SH			X													
B7.60	B-G-2		1-5100	32-B08SH			X													
B7.60	B-G-2		1-5100	32-B09SH			X													
B7.60	B-G-2		1-5100	32-B10SH			X													
B7.60	B-G-2		1-5100	32-B11SH			X													
B7.60	B-G-2		1-5100	32-B12SH			X													
B7.60	B-G-2		1-5100	32-B13SH			X													
B7.60	B-G-2		1-5100	32-B14SH			X													
B7.60	B-G-2		1-5100	32-B15SH			X													
B7.60	B-G-2		1-5100	32-B16SH			X													

NSBU COMPONENT SURVEILLANCE SCHEDULE
Westinghouse Proprietary

COMPONENT: PUMP BOLTS, STUDS, AND NUTS SEAL HOUSE

89	89		INT		EXAMINATION METHOD			FIRST INTERVAL			SECOND INTERVAL			THIRD INTERVAL			FOURTH INTERVAL			
ITEM NUMBER	CATEGORY NUMBER	DESCRIPTION	SKETCH NUMBER	IDENT. NUMBER	VOL.	SUR	VIS.	1ST	2ND	3RD	1ST	2ND	3RD	1ST	2ND	3RD	1ST	2ND	3RD	REMARKS
								PERIOD			PERIOD			PERIOD			PERIOD			
B7.60	B-G-2		1-5100	32-B17SH			X													
B7.60	B-G-2		1-5100	32-B18SH			X													
B7.60	B-G-2		1-5100	33-B01SH			X													
B7.60	B-G-2		1-5100	33-B02SH			X													
B7.60	B-G-2		1-5100	33-B03SH			X													
B7.60	B-G-2		1-5100	33-B04SH			X													
B7.60	B-G-2		1-5100	33-B05SH			X													
B7.60	B-G-2		1-5100	33-B06SH			X													
B7.60	B-G-2		1-5100	33-B07SH			X													
B7.60	B-G-2		1-5100	33-B08SH			X													
B7.60	B-G-2		1-5100	33-B09SH			X													
B7.60	B-G-2		1-5100	33-B10SH			X													
B7.60	B-G-2		1-5100	33-B11SH			X													
B7.60	B-G-2		1-5100	33-B12SH			X													
B7.60	B-G-2		1-5100	33-B13SH			X													
B7.60	B-G-2		1-5100	33-B14SH			X													
B7.60	B-G-2		1-5100	33-B15SH			X													
B7.60	B-G-2		1-5100	33-B16SH			X													
B7.60	B-G-2		1-5100	33-B17SH			X													
B7.60	B-G-2		1-5100	33-B18SH			X													
B7.60	B-G-2		1-5100	34-B01SH			X													
B7.60	B-G-2		1-5100	34-B02SH			X													
B7.60	B-G-2		1-5100	34-B03SH			X													
B7.60	B-G-2		1-5100	34-B04SH			X													
B7.60	B-G-2		1-5100	34-B05SH			X													
B7.60	B-G-2		1-5100	34-B06SH			X													
B7.60	B-G-2		1-5100	34-B07SH			X													
B7.60	B-G-2		1-5100	34-B08SH			X													
B7.60	B-G-2		1-5100	34-B09SH			X													
B7.60	B-G-2		1-5100	34-B10SH			X													
B7.60	B-G-2		1-5100	34-B11SH			X													
B7.60	B-G-2		1-5100	34-B12SH			X													
B7.60	B-G-2		1-5100	34-B13SH			X													
B7.60	B-G-2		1-5100	34-B14SH			X													
B7.60	B-G-2		1-5100	34-B15SH			X													
B7.60	B-G-2		1-5100	34-B16SH			X													
B7.60	B-G-2		1-5100	34-B17SH			X													

NSBU COMPONENT SURVEILLANCE SCHEDULE
Westinghouse Proprietary

COMPONENT: PUMP BOLTS, STUDS, AND NUTS SEAL HOUSE

89	89		INT		EXAMINATION METHOD			FIRST INTERVAL			SECOND INTERVAL			THIRD INTERVAL			FOURTH INTERVAL			
ITEM NUMBER	CATEGORY NUMBER	DESCRIPTION	SKETCH NUMBER	IDENT. NUMBER	VOL.	SUR	VIS.	1ST	2ND	3RD	1ST	2ND	3RD	1ST	2ND	3RD	1ST	2ND	3RD	REMARKS
								PERIOD			PERIOD			PERIOD			PERIOD			
B7.60	B-G-2		1-5100	34-B18SH			X													
TOTAL ID'S FOR B7.60				72	0	0	72	TOTAL SCHEDULED						18	0	0				
								TOTAL COMPLETED						0	0	0				

NSBU COMPONENT SURVEILLANCE SCHEDULE
Westinghouse Proprietary

COMPONENT: VALVE BOLTS, STUDS, AND NUTS

89	89		INT		EXAMINATION METHOD			FIRST INTERVAL			SECOND INTERVAL			THIRD INTERVAL			FOURTH INTERVAL			
ITEM NUMBER	CATEGORY NUMBER	DESCRIPTION	SKETCH NUMBER	IDENT. NUMBER	VOL.	SUR	VIS.	1ST	2ND	3RD	1ST	2ND	3RD	1ST	2ND	3RD	1ST	2ND	3RD	REMARKS
								PERIOD			PERIOD			PERIOD			PERIOD			
B7.70	B-G-2		1-4101	838A			X													Reference Table 4.0
B7.70	B-G-2		1-4101	895A			X								/					VT-1
B7.70	B-G-2		1-4101	897A			X													
B7.70	B-G-2		1-4103	342			X													
B7.70	B-G-2		1-4103	LVC459			X													
B7.70	B-G-2		1-4103	LVC460			X													
B7.70	B-G-2		1-4201	730			X													
B7.70	B-G-2		1-4201	731			X													
B7.70	B-G-2		1-4202	838B			X													
B7.70	B-G-2		1-4202	895B			X													
B7.70	B-G-2		1-4202	897B			X													
B7.70	B-G-2		1-4301	838C			X													
B7.70	B-G-2		1-4301	895C			X													
B7.70	B-G-2		1-4301	897C			X													
B7.70	B-G-2		1-4401	838D			X													
B7.70	B-G-2		1-4401	895D			X													
B7.70	B-G-2		1-4401	897D			X													
B7.70	B-G-2		1-4501	PCV464			X							/						
B7.70	B-G-2		1-4502	PCV466			X													
B7.70	B-G-2		1-4503	PCV468			X													
B7.70	B-G-2		1-4505	RC535			X							/						
B7.70	B-G-2		1-4505	RC536			X							/						
B7.70	B-G-2		1-4505	PCV456			X								/					
B7.70	B-G-2		1-4505	PCV455C			X								/					
B7.70	B-G-2		1-4506	PCV455A			X													

NSBU COMPONENT SURVEILLANCE SCHEDULE
Westinghouse Proprietary

COMPONENT: VALVE BOLTS, STUDS, AND NUTS

89	89		INT		EXAMINATION METHOD			FIRST INTERVAL			SECOND INTERVAL			THIRD INTERVAL			FOURTH INTERVAL			
ITEM NUMBER	CATEGORY NUMBER	DESCRIPTION	SKETCH NUMBER	IDENT. NUMBER	VOL.	SUR	VIS.	1ST	2ND	3RD	1ST	2ND	3RD	1ST	2ND	3RD	1ST	2ND	3RD	REMARKS
								PERIOD			PERIOD			PERIOD			PERIOD			
B7.70	B-G-2		1-4507	PCV455B			X													
B7.70	B-G-2		1-4600	210B			X													
B7.70	B-G-2		1-4600	210D			X													
B7.70	B-G-2		1-4601	210A			X									/				
B7.70	B-G-2		1-4601	210C			X									/				
								TOTAL SCHEDULED						3	3	2				
TOTAL ID'S FOR B7.70				30	0	0	30	TOTAL COMPLETED						0	0	0				

NSBU COMPONENT SURVEILLANCE SCHEDULE
Westinghouse Proprietary

COMPONENT: CRD HOUSING BOLTS, STUDS, AND NUTS

89	89		INT		EXAMINATION METHOD			FIRST INTERVAL			SECOND INTERVAL			THIRD INTERVAL			FOURTH INTERVAL			
ITEM NUMBER	CATEGORY NUMBER	DESCRIPTION	SKETCH NUMBER	IDENT. NUMBER	VOL.	SUR	VIS.	1ST	2ND	3RD	1ST	2ND	3RD	1ST	2ND	3RD	1ST	2ND	3RD	REMARKS
								PERIOD			PERIOD			PERIOD			PERIOD			
B7.80	B-G-2		1-1300	CRD-74			X							/						Reference Table 4.0
B7.80	B-G-2		1-1300	CRD-75			X								/					VT-1
B7.80	B-G-2		1-1300	CRD-76			X								/					
B7.80	B-G-2		1-1300	CRD-77			X									/				
B7.80	B-G-2		1-1300	CRD-78			X									/				
TOTAL ID'S FOR B7.80				5	0	0	5	TOTAL SCHEDULED						1	2	2				
								TOTAL COMPLETED						0	0	0				

NSBU COMPONENT SURVEILLANCE SCHEDULE
Westinghouse Proprietary

COMPONENT: PRESSURIZER INTEGRALLY WELDED ATTACHMENTS

89	89		INT		EXAMINATION METHOD			FIRST INTERVAL			SECOND INTERVAL			THIRD INTERVAL			FOURTH INTERVAL			
ITEM NUMBER	CATEGORY NUMBER	DESCRIPTION	SKETCH NUMBER	IDENT. NUMBER	VOL.	SUR	VIS.	1ST	2ND	3RD	1ST	2ND	3RD	1ST	2ND	3RD	1ST	2ND	3RD	REMARKS
								PERIOD			PERIOD			PERIOD			PERIOD			
B8.20	B-H		1-2100	18			X							/						REFERENCE TABLE 4.0
TOTAL ID'S FOR B8.20				1	0	0	1	TOTAL SCHEDULED						1	0	0				
								TOTAL COMPLETED						0	0	0				

NSBU COMPONENT SURVEILLANCE SCHEDULE
Westinghouse Proprietary

COMPONENT: PIPE CIRCUMFERENTIAL WELDS 4" NPS AND GREATER

89	89		INT		EXAMINATION METHOD			FIRST INTERVAL			SECOND INTERVAL			THIRD INTERVAL			FOURTH INTERVAL			
ITEM NUMBER	CATEGORY NUMBER	DESCRIPTION	SKETCH NUMBER	IDENT. NUMBER	VOL.	SUR	VIS.	1ST	2ND	3RD	1ST	2ND	3RD	1ST	2ND	3RD	1ST	2ND	3RD	REMARKS
								PERIOD			PERIOD			PERIOD			PERIOD			
B9.11	B-J		1-4100	2	X											/				REFERENCE TABLE 4.0
				2		X														
B9.11	B-J		1-4100	3	X															
				3		X														
B9.11	B-J		1-4100	4	X															
				4		X														
B9.11	B-J		1-4100	7	X											/				
				7		X										/				
B9.11	B-J		1-4100	8	X											/				
				8		X										/				
B9.11	B-J		1-4100	9	X															
				9		X														
B9.11	B-J		1-4100	10	X															
				10		X														
B9.11	B-J		1-4100	11	X															
				11		X														
B9.11	B-J		1-4100	12	X															
				12		X														
B9.11	B-J		1-4100	13	X															
				13		X														
B9.11	B-J		1-4100	14	X															
				14		X														
B9.11	B-J		1-4100	15	X											/				REFERENCE TABLE 4.0
				15		X														
B9.11	B-J		1-4101	1	X									/						
				1		X								/						
B9.11	B-J		1-4101	2	X									/						
				2		X								/						
B9.11	B-J		1-4101	3	X									/						
				3		X								/						
B9.11	B-J		1-4101	4	X									/						
				4		X								/						

NSBU COMPONENT SURVEILLANCE SCHEDULE
Westinghouse Proprietary

COMPONENT: PIPE CIRCUMFERENTIAL WELDS 4" NPS AND GREATER

89	89		INT		EXAMINATION METHOD			FIRST INTERVAL			SECOND INTERVAL			THIRD INTERVAL			FOURTH INTERVAL			
ITEM NUMBER	CATEGORY NUMBER	DESCRIPTION	SKETCH NUMBER	IDENT. NUMBER	VOL.	SUR	VIS.	1ST	2ND	3RD	1ST	2ND	3RD	1ST	2ND	3RD	1ST	2ND	3RD	REMARKS
								PERIOD			PERIOD			PERIOD			PERIOD			
B9.11	B-J		1-4101	5	X									/						
				5		X								/						
B9.11	B-J		1-4101	6	X															
				6		X														
B9.11	B-J		1-4101	7	X															
				7		X														
B9.11	B-J		1-4101	8	X															
				8		X														
B9.11	B-J		1-4101	9	X															
				9		X														
B9.11	B-J		1-4101	10	X															
				10		X														
B9.11	B-J		1-4101	11	X															
				11		X														
B9.11	B-J		1-4101	12	X															
				12		X														
B9.11	B-J		1-4101	13	X															
				13		X														
B9.11	B-J		1-4101	14	X															
				14		X														
B9.11	B-J		1-4101	15	X															
				15		X														
B9.11	B-J		1-4102	54	X															
				54		X														
B9.11	B-J		1-4200	2	X											/				REFERENCE TABLE 4.0
				2		X														
B9.11	B-J		1-4200	3	X															
				3		X														
B9.11	B-J		1-4200	4	X															
				4		X														
B9.11	B-J		1-4200	7	X															
				7		X														

COMPONENT: PIPE CIRCUMFERENTIAL WELDS 4" NPS AND GREATER

89	89		INT		EXAMINATION METHOD			FIRST INTERVAL			SECOND INTERVAL			THIRD INTERVAL			FOURTH INTERVAL			
ITEM NUMBER	CATEGORY NUMBER	DESCRIPTION	SKETCH NUMBER	IDENT. NUMBER	VOL.	SUR	VIS.	1ST	2ND	3RD	1ST	2ND	3RD	1ST	2ND	3RD	1ST	2ND	3RD	REMARKS
								PERIOD			PERIOD			PERIOD			PERIOD			
B9.11	B-J		1-4200	8	X											/				
				8		X										/				
B9.11	B-J		1-4200	9	X															
				9		X														
B9.11	B-J		1-4200	10	X															
				10		X														
B9.11	B-J		1-4200	11	X															
				11		X														
B9.11	B-J		1-4200	12	X															
				12		X														
B9.11	B-J		1-4200	13	X															
				13		X														
B9.11	B-J		1-4200	14	X															
				14		X														
B9.11	B-J		1-4200	15	X											/				REFERENCE TABLE 4.0
				15		X														
B9.11	B-J		1-4201	2	X											/				
				2		X										/				
B9.11	B-J		1-4201	3	X															
				3		X														
B9.11	B-J		1-4201	4	X															
				4		X														
B9.11	B-J		1-4201	5	X															
				5		X														
B9.11	B-J		1-4201	6	X															
				6		X														
B9.11	B-J		1-4201	7	X															
				7		X														
B9.11	B-J		1-4201	8	X									/						
				8		X								/						
B9.11	B-J		1-4201	9	X															
				9		X														
B9.11	B-J		1-4201	10	X									/						
				10		X								/						

NSBU COMPONENT SURVEILLANCE SCHEDULE

COMPONENT: PIPE CIRCUMFERENTIAL WELDS 4" NPS AND GREATER

89	89		INT		EXAMINATION METHOD			FIRST INTERVAL			SECOND INTERVAL			THIRD INTERVAL			FOURTH INTERVAL			
ITEM NUMBER	CATEGORY NUMBER	DESCRIPTION	SKETCH NUMBER	IDENT. NUMBER	VOL.	SUR	VIS.	1ST	2ND	3RD	1ST	2ND	3RD	1ST	2ND	3RD	1ST	2ND	3RD	REMARKS
								PERIOD			PERIOD			PERIOD			PERIOD			
B9.11	B-J		1-4201	11	X															
				11		X														
B9.11	B-J		1-4201	12	X															
				12		X														
B9.11	B-J		1-4201	13	X															
				13		X														
B9.11	B-J		1-4201	14	X															
				14		X														
B9.11	B-J		1-4201	15	X															
				15		X														
B9.11	B-J		1-4201	16	X															
				16		X														
B9.11	B-J		1-4201	17	X															
				17		X														
B9.11	B-J		1-4201	18	X									/						
				18		X								/						
B9.11	B-J		1-4201	19	X									/						
				19		X								/						
B9.11	B-J		1-4201	20	X									/						
				20		X								/						
B9.11	B-J		1-4202	1	X											/				
				1		X										/				
B9.11	B-J		1-4202	2	X											/				
				2		X										/				
B9.11	B-J		1-4202	3	X											/				
				3		X										/				
B9.11	B-J		1-4202	4	X											/				
				4		X										/				
B9.11	B-J		1-4202	5	X															
				5		X														
B9.11	B-J		1-4202	6	X															
				6		X														
B9.11	B-J		1-4202	7	X															
				7		X														

NSBU COMPONENT SURVEILLANCE SCHEDULE

COMPONENT: PIPE CIRCUMFERENTIAL WELDS 4" NPS AND GREATER

89	89		INT		EXAMINATION METHOD			FIRST INTERVAL			SECOND INTERVAL			THIRD INTERVAL			FOURTH INTERVAL			
ITEM NUMBER	CATEGORY NUMBER	DESCRIPTION	SKETCH NUMBER	IDENT. NUMBER	VOL.	SUR	VIS.	1ST	2ND	3RD	1ST	2ND	3RD	1ST	2ND	3RD	1ST	2ND	3RD	REMARKS
								PERIOD			PERIOD			PERIOD			PERIOD			
B9.11	B-J		1-4202	8	X															
				8		X														
B9.11	B-J		1-4202	9	X															
				9		X														
B9.11	B-J		1-4202	10	X															
				10		X														
B9.11	B-J		1-4202	11	X															
				11		X														
B9.11	B-J		1-4202	12	X															
				12		X														
B9.11	B-J		1-4203	2	X															
				2		X														
B9.11	B-J		1-4300	2	X											/				REFERENCE TABLE 4.0
				2		X														
B9.11	B-J		1-4300	3	X															
				3		X														
B9.11	B-J		1-4300	4	X															
				4		X														
B9.11	B-J		1-4300	7	X															
				7		X														
B9.11	B-J		1-4300	8	X															
				8		X														
B9.11	B-J		1-4300	9	X															
				9		X														
B9.11	B-J		1-4300	10	X										/					
				10		X									/					
B9.11	B-J		1-4300	11	X															
				11		X														
B9.11	B-J		1-4300	12	X															
				12		X														
B9.11	B-J		1-4300	13	X															
				13		X														

NSBU COMPONENT SURVEILLANCE SCHEDULE
Westinghouse Proprietary

COMPONENT: PIPE CIRCUMFERENTIAL WELDS 4" NPS AND GREATER

89	89		INT		EXAMINATION METHOD			FIRST INTERVAL			SECOND INTERVAL			THIRD INTERVAL			FOURTH INTERVAL			
ITEM NUMBER	CATEGORY NUMBER	DESCRIPTION	SKETCH NUMBER	IDENT. NUMBER	VOL.	SUR	VIS.	1ST	2ND	3RD	1ST	2ND	3RD	1ST	2ND	3RD	1ST	2ND	3RD	REMARKS
								PERIOD			PERIOD			PERIOD			PERIOD			
B9.11	B-J		1-4300	14	X															
				14		X														
B9.11	B-J		1-4300	15	X											/				
				15		X														REFERENCE TABLE 4.0
B9.11	B-J		1-4301	1	X									/						
				1		X								/						
B9.11	B-J		1-4301	2	X															
				2		X														
B9.11	B-J		1-4301	3	X															
				3		X														
B9.11	B-J		1-4301	4	X															
				4		X														
B9.11	B-J		1-4301	5	X										/					
				5		X									/					
B9.11	B-J		1-4301	6	X										/					
				6		X									/					
B9.11	B-J		1-4301	7	X															
				7		X														
B9.11	B-J		1-4301	8	X															
				8		X														
B9.11	B-J		1-4301	9	X															
				9		X														
B9.11	B-J		1-4301	10	X															
				10		X														
B9.11	B-J		1-4301	11	X															
				11		X														
B9.11	B-J		1-4301	12	X															
				12		X														
B9.11	B-J		1-4302	32	X									/						
				32		X								/						
B9.11	B-J		1-4400	2	X											/				REFERENCE TABLE 4.0
				2		X														

NSBU COMPONENT SURVEILLANCE SCHEDULE

Westinghouse Proprietary

COMPONENT: PIPE CIRCUMFERENTIAL WELDS 4" NPS AND GREATER

89	89		INT		EXAMINATION METHOD			FIRST INTERVAL			SECOND INTERVAL			THIRD INTERVAL			FOURTH INTERVAL			
ITEM NUMBER	CATEGORY NUMBER	DESCRIPTION	SKETCH NUMBER	IDENT. NUMBER	VOL.	SUR	VIS.	1ST	2ND	3RD	1ST	2ND	3RD	1ST	2ND	3RD	1ST	2ND	3RD	REMARKS
								PERIOD			PERIOD			PERIOD			PERIOD			
B9.11	B-J		1-4400	3	X															
				3		X														
B9.11	B-J		1-4400	4	X									/						
				4		X								/						
B9.11	B-J		1-4400	7	X															
				7		X														
B9.11	B-J		1-4400	8	X															
				8		X														
B9.11	B-J		1-4400	9	X															
				9		X														
B9.11	B-J		1-4400	10	X															
				10		X														
B9.11	B-J		1-4400	11	X															
				11		X														
B9.11	B-J		1-4400	12	X															
				12		X														
B9.11	B-J		1-4400	13	X															
				13		X														
B9.11	B-J		1-4400	14	X															
				14		X														
B9.11	B-J		1-4400	15	X											/				REFERENCE TABLE 4.0
				15		X														
B9.11	B-J		1-4401	1	X										/					
				1		X									/					
B9.11	B-J		1-4401	2	X															
				2		X														
B9.11	B-J		1-4401	3	X										/					
				3		X									/					
B9.11	B-J		1-4401	4	X										/					
				4		X									/					
B9.11	B-J		1-4401	5	X															
				5		X														
B9.11	B-J		1-4401	6	X															
				6		X														
B9.11	B-J		1-4401	7	X															
				7		X														
B9.11	B-J		1-4401	8	X															
				8		X														

NSBU COMPONENT SURVEILLANCE SCHEDULE
Westinghouse Proprietary

COMPONENT: PIPE CIRCUMFERENTIAL WELDS 4" NPS AND GREATER

89	89		INT		EXAMINATION METHOD			FIRST INTERVAL			SECOND INTERVAL			THIRD INTERVAL			FOURTH INTERVAL			
ITEM NUMBER	CATEGORY NUMBER	DESCRIPTION	SKETCH NUMBER	IDENT. NUMBER	VOL.	SUR	VIS.	1ST	2ND	3RD	1ST	2ND	3RD	1ST	2ND	3RD	1ST	2ND	3RD	REMARKS
								PERIOD			PERIOD			PERIOD			PERIOD			
B9.11	B-J		1-4401	9	X															
				9		X														
B9.11	B-J		1-4401	10	X															
				10		X														
B9.11	B-J		1-4401	11	X															
				11		X														
B9.11	B-J		1-4401	12	X															
				12		X														
B9.11	B-J		1-4402	2	X															
				2		X														
B9.11	B-J		1-4500	2	X									/						
				2		X								/						
B9.11	B-J		1-4500	3	X															
				3		X														
B9.11	B-J		1-4500	4	X															
				4		X														
B9.11	B-J		1-4500	5	X															
				5		X														
B9.11	B-J		1-4500	6	X															
				6		X														
B9.11	B-J		1-4501	2	X															
				2		X														
B9.11	B-J		1-4501	3	X															
				3		X														
B9.11	B-J		1-4501	4	X										/					
				4		X									/					
B9.11	B-J		1-4501	5	X										/					
				5		X									/					
B9.11	B-J		1-4501	6	X															
				6		X														
B9.11	B-J		1-4501	7	X															
				7		X														
B9.11	B-J		1-4501	8	X															
				8		X														
B9.11	B-J		1-4501	9	X															
				9		X														

NSBU COMPONENT SURVEILLANCE SCHEDULE
Westinghouse Proprietary

COMPONENT: PIPE CIRCUMFERENTIAL WELDS 4" NPS AND GREATER

89	89		INT		EXAMINATION METHOD			FIRST INTERVAL			SECOND INTERVAL			THIRD INTERVAL			FOURTH INTERVAL			
ITEM NUMBER	CATEGORY NUMBER	DESCRIPTION	SKETCH NUMBER	IDENT. NUMBER	VOL.	SUR	VIS.	1ST	2ND	3RD	1ST	2ND	3RD	1ST	2ND	3RD	1ST	2ND	3RD	REMARKS
								PERIOD			PERIOD			PERIOD			PERIOD			
B9.11	B-J		1-4502	2	X									/						
				2		X								/						
B9.11	B-J		1-4502	3	X									/						
				3		X								/						
B9.11	B-J		1-4502	4	X															
				4		X														
B9.11	B-J		1-4502	5	X															
				5		X														
B9.11	B-J		1-4502	6	X															
				6		X														
B9.11	B-J		1-4502	7	X															
				7		X														
B9.11	B-J		1-4502	8	X															
				8		X														
B9.11	B-J		1-4502	9	X															
				9		X														
B9.11	B-J		1-4503	2	X										/					
				2		X									/					
B9.11	B-J		1-4503	3	X										/					
				3		X									/					
B9.11	B-J		1-4503	4	X															
				4		X														
B9.11	B-J		1-4503	5	X															
				5		X														
B9.11	B-J		1-4503	6	X															
				6		X														
B9.11	B-J		1-4503	7	X															
				7		X														
B9.11	B-J		1-4503	8	X															
				8		X														
B9.11	B-J		1-4503	9	X															
				9		X														
B9.11	B-J		1-4504	1	X															
				1		X														
B9.11	B-J		1-4504	2	X															
				2		X														

NSBU COMPONENT SURVEILLANCE SCHEDULE

COMPONENT: PIPE CIRCUMFERENTIAL WELDS 4" NPS AND GREATER

89	89		INT		EXAMINATION METHOD			FIRST INTERVAL			SECOND INTERVAL			THIRD INTERVAL			FOURTH INTERVAL			
ITEM NUMBER	CATEGORY NUMBER	DESCRIPTION	SKETCH NUMBER	IDENT. NUMBER	VOL.	SUR	VIS.	1ST	2ND	3RD	1ST	2ND	3RD	1ST	2ND	3RD	1ST	2ND	3RD	REMARKS
								PERIOD			PERIOD			PERIOD			PERIOD			
B9.11	B-J		1-4504	3	X															
				3		X														
B9.11	B-J		1-4504	4	X															
				4		X														
B9.11	B-J		1-4504	5	X															
				5		X														
B9.11	B-J		1-4504	6	X															
				6		X														
B9.11	B-J		1-4504	7	X															
				7		X														
B9.11	B-J		1-4504	8	X															
				8		X														
B9.11	B-J		1-4504	9	X															
				9		X														
B9.11	B-J		1-4504	10	X															
				10		X														
B9.11	B-J		1-4504	11	X															
				11		X														
B9.11	B-J		1-4504	12	X															
				12		X														
B9.11	B-J		1-4504	13	X															
				13		X														
B9.11	B-J		1-4504	14	X															
				14		X														
B9.11	B-J		1-4504	15	X											/				
				15		X										/				
B9.11	B-J		1-4505	2	X															
				2		X														
B9.11	B-J		1-4505	3	X										/					
				3		X									/					
B9.11	B-J		1-4505	4	X										/					
				4		X									/					
B9.11	B-J		1-4505	5	X										/					
				5		X									/					
TOTAL ID'S FOR B9.11				170	170	170	0	TOTAL SCHEDULED						32	26	26				
								TOTAL COMPLETED						0	0	0				

NSBU COMPONENT SURVEILLANCE SCHEDULE

COMPONENT: PIPE LONGITUDIANL WELDS 4" NPS AND GREATER

89	89		INT		EXAMINATION METHOD			FIRST INTERVAL			SECOND INTERVAL			THIRD INTERVAL			FOURTH INTERVAL			
ITEM NUMBER	CATEGORY NUMBER	DESCRIPTION	SKETCH NUMBER	IDENT. NUMBER	VOL.	SUR	VIS.	1ST	2ND	3RD	1ST	2ND	3RD	1ST	2ND	3RD	1ST	2ND	3RD	REMARKS
								PERIOD			PERIOD			PERIOD			PERIOD			
B9.12	B-J		1-4100	17	X											/				REFERENCE TABLE 4.0
				17		X										/				Code Case
B9.12	B-J		1-4100	18	X											/				N-524 Applies
				18		X										/				
B9.12	B-J		1-4100	19	X															
				19		X														
B9.12	B-J		1-4100	20	X															
				20		X														
B9.12	B-J		1-4200	17	X															
				17		X									/					
B9.12	B-J		1-4200	18	X										/					
				18		X									/					
B9.12	B-J		1-4200	19	X										/					
				19		X														
B9.12	B-J		1-4200	20	X															
				20		X														
B9.12	B-J		1-4300	17	X															
				17		X														
B9.12	B-J		1-4300	18	X															
				18		X														
B9.12	B-J		1-4300	19	X															
				19		X														
B9.12	B-J		1-4300	20	X															
				20		X														
B9.12	B-J		1-4400	17	X															
				17		X														
B9.12	B-J		1-4400	18	X															
				18		X														
B9.12	B-J		1-4400	19	X									/						
				19		X								/						
B9.12	B-J		1-4400	20	X									/						
				20		X								/						
TOTAL ID'S FOR B9.12				16	16	16	0	TOTAL SCHEDULED						4	4	4				
								TOTAL COMPLETED						0	0	0				

NSBU COMPONENT SURVEILLANCE SCHEDULE
Westinghouse Proprietary

COMPONENT: PIPE CIRC. WELDS LESS THAN 4" NPS

89	89		INT		EXAMINATION METHOD			FIRST INTERVAL			SECOND INTERVAL			THIRD INTERVAL			FOURTH INTERVAL			
ITEM NUMBER	CATEGORY NUMBER	DESCRIPTION	SKETCH NUMBER	IDENT. NUMBER	VOL.	SUR	VIS.	1ST	2ND	3RD	1ST	2ND	3RD	1ST	2ND	3RD	1ST	2ND	3RD	REMARKS
								PERIOD			PERIOD			PERIOD			PERIOD			
B9.21	B-J		1-4103	2		X														REFERENCE TABLE 4.0
B9.21	B-J		1-4103	3		X									/					
B9.21	B-J		1-4103	4		X									/					
B9.21	B-J		1-4103	5		X														
B9.21	B-J		1-4103	6		X														
B9.21	B-J		1-4103	7		X														
B9.21	B-J		1-4103	10		X														
B9.21	B-J		1-4103	11		X														
B9.21	B-J		1-4103	13		X														
B9.21	B-J		1-4103	14(BW)		X														
B9.21	B-J		1-4104	11		X									/					
B9.21	B-J		1-4204	11		X								/						
B9.21	B-J		1-4303	11		X								/						
B9.21	B-J		1-4403	11		X								/						
B9.21	B-J		1-4505	6		X									/					
B9.21	B-J		1-4505	7		X									/					
B9.21	B-J		1-4505	8		X									/					
B9.21	B-J		1-4505	9		X														
B9.21	B-J		1-4505	10		X														
B9.21	B-J		1-4505	11		X														
B9.21	B-J		1-4505	12		X														
B9.21	B-J		1-4505	13		X														
B9.21	B-J		1-4505	14		X														
B9.21	B-J		1-4505	15		X														
B9.21	B-J		1-4505	16		X														
B9.21	B-J		1-4506	2		X														
B9.21	B-J		1-4506	3		X														
B9.21	B-J		1-4506	4		X														

NSBU COMPONENT SURVEILLANCE SCHEDULE
Westinghouse Proprietary

COMPONENT: PIPE CIRC. WELDS LESS THAN 4" NPS

89	89		INT		EXAMINATION METHOD			FIRST INTERVAL			SECOND INTERVAL			THIRD INTERVAL			FOURTH INTERVAL			
ITEM NUMBER	CATEGORY NUMBER	DESCRIPTION	SKETCH NUMBER	IDENT. NUMBER	VOL.	SUR	VIS.	1ST	2ND	3RD	1ST	2ND	3RD	1ST	2ND	3RD	1ST	2ND	3RD	REMARKS
								PERIOD			PERIOD			PERIOD			PERIOD			
B9.21	B-J		1-4506	5		X														
B9.21	B-J		1-4506	6		X														
B9.21	B-J		1-4506	7		X								/						
B9.21	B-J		1-4506	8		X								/						
B9.21	B-J		1-4506	9		X														
B9.21	B-J		1-4506	10		X														
B9.21	B-J		1-4506	11		X														
B9.21	B-J		1-4506	12		X														
B9.21	B-J		1-4506	13		X														
B9.21	B-J		1-4506	14		X														
B9.21	B-J		1-4506	15		X														
B9.21	B-J		1-4506	16		X														
B9.21	B-J		1-4506	17		X														
B9.21	B-J		1-4506	18		X														
B9.21	B-J		1-4506	19		X								/						
B9.21	B-J		1-4506	20		X								/						
B9.21	B-J		1-4506	21		X								/						
B9.21	B-J		1-4506	22		X														
B9.21	B-J		1-4507	2		X														
B9.21	B-J		1-4507	3		X														
B9.21	B-J		1-4507	4		X														
B9.21	B-J		1-4507	5		X														
B9.21	B-J		1-4507	6		X														
B9.21	B-J		1-4507	7		X									/					
B9.21	B-J		1-4507	8		X														
B9.21	B-J		1-4507	9		X										/				
B9.21	B-J		1-4507	10		X										/				
B9.21	B-J		1-4507	11		X										/				
B9.21	B-J		1-4507	12		X														
B9.21	B-J		1-4507	13		X														
B9.21	B-J		1-4507	14		X														
B9.21	B-J		1-4507	15		X														
B9.21	B-J		1-4507	16		X														
B9.21	B-J		1-4507	17		X														

NSBU COMPONENT SURVEILLANCE SCHEDULE
Westinghouse Proprietary

COMPONENT: PIPE CIRC. WELDS LESS THAN 4" NPS

89	89		INT		EXAMINATION METHOD			FIRST INTERVAL			SECOND INTERVAL			THIRD INTERVAL			FOURTH INTERVAL			
ITEM NUMBER	CATEGORY NUMBER	DESCRIPTION	SKETCH NUMBER	IDENT. NUMBER	VOL.	SUR	VIS.	1ST	2ND	3RD	1ST	2ND	3RD	1ST	2ND	3RD	1ST	2ND	3RD	REMARKS
								PERIOD			PERIOD			PERIOD			PERIOD			
B9.21	B-J		1-4507	18		X														
B9.21	B-J		1-4507	19		X														
B9.21	B-J		1-4507	20		X														
B9.21	B-J		1-4507	21		X														
B9.21	B-J		1-4507	22		X														
B9.21	B-J		1-4507	23		X										/				
B9.21	B-J		1-4507	24		X										/				
B9.21	B-J		1-4507	25		X										/				
B9.21	B-J		1-4507	26		X										/				
B9.21	B-J		1-4507	27		X										/				
B9.21	B-J		1-4507	28		X														
B9.21	B-J		1-4507	29		X														
B9.21	B-J		1-4507	30		X														
B9.21	B-J		1-4600	1		X														
B9.21	B-J		1-4600	2		X														
B9.21	B-J		1-4600	3		X														
B9.21	B-J		1-4600	4		X														
B9.21	B-J		1-4601	1		X														
B9.21	B-J		1-4601	2		X														
B9.21	B-J		1-4601	3		X														
B9.21	B-J		1-4601	4		X														
B9.21	B-J		1-4601	5		X														
B9.21	B-J		1-4601	6		X														
TOTAL ID'S FOR B9.21				85	0	85	0	TOTAL SCHEDULED						8	7	8				
								TOTAL COMPLETED						0	0	0				

NSBU COMPONENT SURVEILLANCE SCHEDULE

COMPONENT: BRANCH PIPE CONNECTION WELDS 4" NPS AND GREATER

89	89		INT		EXAMINATION METHOD			FIRST INTERVAL			SECOND INTERVAL			THIRD INTERVAL			FOURTH INTERVAL			
ITEM NUMBER	CATEGORY NUMBER	DESCRIPTION	SKETCH NUMBER	IDENT. NUMBER	VOL.	SUR	VIS.	1ST	2ND	3RD	1ST	2ND	3RD	1ST	2ND	3RD	1ST	2ND	3RD	REMARKS
								PERIOD			PERIOD			PERIOD			PERIOD			
B9.31	B-J		1-4101	16(BC)	X										/					REFERENCE TABLE 4.0
				16(BC)		X									/					
B9.31	B-J		1-4102	55(BC)	X										/					
				55(BC)		X									/					
B9.31	B-J		1-4201	1(BC)	X															
				1(BC)		X														
B9.31	B-J		1-4202	13(BC)	X															
				13(BC)		X														
B9.31	B-J		1-4203	1(BC)	X															
				1(BC)		X														
B9.31	B-J		1-4301	13(BC)	X															
				13(BC)		X														
B9.31	B-J		1-4302	33(BC)	X															
				33(BC)		X														
B9.31	B-J		1-4401	13(BC)	X															
				13(BC)		X														
B9.31	B-J		1-4402	1(BC)	X															
				1(BC)		X														
B9.31	B-J		1-4500	7(BC)	X									/						
				7(BC)		X								/						
TOTAL ID'S FOR B9.31				10	10	10	0	TOTAL SCHEDULED						2	4	0				
								TOTAL COMPLETED						0	0	0				

NSBU COMPONENT SURVEILLANCE SCHEDULE
Westinghouse Proprietary

COMPONENT: BRANCH PIPE CONNECTION WELDS LESS THAN 4" NPS

89	89		INT		EXAMINATION METHOD			FIRST INTERVAL			SECOND INTERVAL			THIRD INTERVAL			FOURTH INTERVAL			
ITEM NUMBER	CATEGORY NUMBER	DESCRIPTION	SKETCH NUMBER	IDENT. NUMBER	VOL.	SUR	VIS.	1ST	2ND	3RD	1ST	2ND	3RD	1ST	2ND	3RD	1ST	2ND	3RD	REMARKS
								PERIOD			PERIOD			PERIOD			PERIOD			
B9.32	B-J		1-4101	19(BC)		X														REFERENCE TABLE 4.0
B9.32	B-J		1-4102	53(BC)		X														
B9.32	B-J		1-4103	1(BC)		X								/						
B9.32	B-J		1-4104	12(BC)		X								/						
B9.32	B-J		1-4106	1(BC)		X														
B9.32	B-J		1-4107	25(BC)		X														
B9.32	B-J		1-4202	14(BC)		X														
B9.32	B-J		1-4204	12(BC)		X										/				
B9.32	B-J		1-4206	1(BC)		X														
B9.32	B-J		1-4207	29(BC)		X														
B9.32	B-J		1-4209	1(BC)		X										/				
B9.32	B-J		1-4301	14(BC)		X														
B9.32	B-J		1-4302	31(BC)		X														
B9.32	B-J		1-4303	12(BC)		X									/					
B9.32	B-J		1-4305	1(BC)		X														
B9.32	B-J		1-4306	31(BC)		X														
B9.32	B-J		1-4308	1(BC)		X														
B9.32	B-J		1-4401	16(BC)		X														
B9.32	B-J		1-4403	12(BC)		X									/					
B9.32	B-J		1-4405	1(BC)		X														

NSBU COMPONENT SURVEILLANCE SCHEDULE

COMPONENT: BRANCH PIPE CONNECTION WELDS LESS THAN 4" NPS

89	89		INT		EXAMINATION METHOD			FIRST INTERVAL			SECOND INTERVAL			THIRD INTERVAL			FOURTH INTERVAL			
ITEM NUMBER	CATEGORY NUMBER	DESCRIPTION	SKETCH NUMBER	IDENT. NUMBER	VOL.	SUR	VIS.	1ST	2ND	3RD	1ST	2ND	3RD	1ST	2ND	3RD	1ST	2ND	3RD	REMARKS
								PERIOD			PERIOD			PERIOD			PERIOD			
B9.32	B-J		1-4406	32(BC)		X														
B9.32	B-J		1-4408	1(BC)		X														
B9.32	B-J		1-4506	1(BC)		X														
B9.32	B-J		1-4507	1(BC)		X														
B9.32	B-J		1-4508	29(BC)		X										/				
B9.32	B-J		1-4600	5(BC)		X														
B9.32	B-J		1-4601	7(BC)		X														
TOTAL ID'S FOR B9.32				27	0	27	0	TOTAL SCHEDULED						2	2	3				
								TOTAL COMPLETED						0	0	0				

NSBU COMPONENT SURVEILLANCE SCHEDULE
Westinghouse Proprietary

COMPONENT: PIPE SOCKET WELDS

89	89		INT		EXAMINATION METHOD			FIRST INTERVAL			SECOND INTERVAL			THIRD INTERVAL			FOURTH INTERVAL			
ITEM NUMBER	CATEGORY NUMBER	DESCRIPTION	SKETCH NUMBER	IDENT. NUMBER	VOL.	SUR	VIS.	1ST	2ND	3RD	1ST	2ND	3RD	1ST	2ND	3RD	1ST	2ND	3RD	REMARKS
								PERIOD			PERIOD			PERIOD			PERIOD			
B9.40	B-J		1-4101	17		X														REFERENCE TABLE 4.0
B9.40	B-J		1-4101	18		X														
B9.40	B-J		1-4102	1		X														
B9.40	B-J		1-4102	2		X														
B9.40	B-J		1-4102	3		X														
B9.40	B-J		1-4102	4		X														
B9.40	B-J		1-4102	5		X														
B9.40	B-J		1-4102	6		X								/						
B9.40	B-J		1-4102	7		X								/						
B9.40	B-J		1-4102	8		X								/						
B9.40	B-J		1-4102	9		X								/						
B9.40	B-J		1-4102	10		X								/						
B9.40	B-J		1-4102	11		X								/						
B9.40	B-J		1-4102	12		X														
B9.40	B-J		1-4102	13		X														
B9.40	B-J		1-4102	14		X														
B9.40	B-J		1-4102	15		X														
B9.40	B-J		1-4102	16		X														
B9.40	B-J		1-4102	17		X														
B9.40	B-J		1-4102	18		X														
B9.40	B-J		1-4102	19		X														
B9.40	B-J		1-4102	20		X														
B9.40	B-J		1-4102	21		X														
B9.40	B-J		1-4102	22		X														
B9.40	B-J		1-4102	23		X														
B9.40	B-J		1-4102	24		X														
B9.40	B-J		1-4102	25		X														
B9.40	B-J		1-4102	26		X														
B9.40	B-J		1-4102	27		X														
B9.40	B-J		1-4102	28		X														
B9.40	B-J		1-4102	29		X														
B9.40	B-J		1-4102	30		X														
B9.40	B-J		1-4102	31		X														

NSBU COMPONENT SURVEILLANCE SCHEDULE
Westinghouse Proprietary

COMPONENT: PIPE SOCKET WELDS

89	89		INT		EXAMINATION METHOD			FIRST INTERVAL			SECOND INTERVAL			THIRD INTERVAL			FOURTH INTERVAL			
ITEM NUMBER	CATEGORY NUMBER	DESCRIPTION	SKETCH NUMBER	IDENT. NUMBER	VOL.	SUR	VIS.	1ST	2ND	3RD	1ST	2ND	3RD	1ST	2ND	3RD	1ST	2ND	3RD	REMARKS
								PERIOD			PERIOD			PERIOD			PERIOD			
B9.40	B-J		1-4102	32		X														
B9.40	B-J		1-4102	33		X														
B9.40	B-J		1-4102	34		X														
B9.40	B-J		1-4102	35		X														
B9.40	B-J		1-4102	36		X														
B9.40	B-J		1-4102	37		X														
B9.40	B-J		1-4102	38		X														
B9.40	B-J		1-4102	39		X														
B9.40	B-J		1-4102	40		X										/				
B9.40	B-J		1-4102	41		X										/				
B9.40	B-J		1-4102	42		X										/				
B9.40	B-J		1-4102	43		X										/				
B9.40	B-J		1-4102	44		X										/				
B9.40	B-J		1-4102	45		X										/				
B9.40	B-J		1-4102	46		X														
B9.40	B-J		1-4102	47		X														
B9.40	B-J		1-4102	48		X														
B9.40	B-J		1-4102	49		X														
B9.40	B-J		1-4102	50		X														
B9.40	B-J		1-4102	51		X														
B9.40	B-J		1-4102	52		X														
B9.40	B-J		1-4103	8		X														
B9.40	B-J		1-4103	9		X														
B9.40	B-J		1-4103	12		X														
B9.40	B-J		1-4103	15		X								/						
B9.40	B-J		1-4103	16		X								/						
B9.40	B-J		1-4103	17		X								/						
B9.40	B-J		1-4103	18		X								/						
B9.40	B-J		1-4103	19		X								/						
B9.40	B-J		1-4103	20		X														
B9.40	B-J		1-4106	2		X														
B9.40	B-J		1-4107	1		X														

NSBU COMPONENT SURVEILLANCE SCHEDULE
Westinghouse Proprietary

COMPONENT: PIPE SOCKET WELDS

89	89		INT		EXAMINATION METHOD			FIRST INTERVAL			SECOND INTERVAL			THIRD INTERVAL			FOURTH INTERVAL			
ITEM NUMBER	CATEGORY NUMBER	DESCRIPTION	SKETCH NUMBER	IDENT. NUMBER	VOL.	SUR	VIS.	1ST	2ND	3RD	1ST	2ND	3RD	1ST	2ND	3RD	1ST	2ND	3RD	REMARKS
								PERIOD			PERIOD			PERIOD			PERIOD			
B9.40	B-J		1-4107	2		X														
B9.40	B-J		1-4107	3		X														
B9.40	B-J		1-4107	4		X														
B9.40	B-J		1-4107	5		X								/						
B9.40	B-J		1-4107	6		X								/						
B9.40	B-J		1-4107	7		X								/						
B9.40	B-J		1-4107	8		X								/						
B9.40	B-J		1-4107	9		X														
B9.40	B-J		1-4107	10		X														
B9.40	B-J		1-4107	11		X														
B9.40	B-J		1-4107	12		X														
B9.40	B-J		1-4107	13		X														
B9.40	B-J		1-4107	14		X														
B9.40	B-J		1-4107	15		X														
B9.40	B-J		1-4107	16		X														
B9.40	B-J		1-4107	17		X														
B9.40	B-J		1-4107	18		X														
B9.40	B-J		1-4107	19		X														
B9.40	B-J		1-4107	20		X														
B9.40	B-J		1-4107	21		X														
B9.40	B-J		1-4107	22		X														
B9.40	B-J		1-4107	23		X														
B9.40	B-J		1-4107	24		X														
B9.40	B-J		1-4107	26		X								/						
B9.40	B-J		1-4108	1		X								/						
B9.40	B-J		1-4108	2		X								/						
B9.40	B-J		1-4108	3		X								/						
B9.40	B-J		1-4108	4		X								/						
B9.40	B-J		1-4108	5		X								/						
B9.40	B-J		1-4108	6		X														
B9.40	B-J		1-4108	7		X														
B9.40	B-J		1-4108	8		X														
B9.40	B-J		1-4108	9		X														
B9.40	B-J		1-4108	10		X														

NSBU COMPONENT SURVEILLANCE SCHEDULE
Westinghouse Proprietary

COMPONENT: PIPE SOCKET WELDS

89	89		INT		EXAMINATION METHOD			FIRST INTERVAL			SECOND INTERVAL			THIRD INTERVAL			FOURTH INTERVAL			
ITEM NUMBER	CATEGORY NUMBER	DESCRIPTION	SKETCH NUMBER	IDENT. NUMBER	VOL.	SUR	VIS.	1ST	2ND	3RD	1ST	2ND	3RD	1ST	2ND	3RD	1ST	2ND	3RD	REMARKS
								PERIOD			PERIOD			PERIOD			PERIOD			
B9.40	B-J		1-4202	15		X														
B9.40	B-J		1-4202	16		X														
B9.40	B-J		1-4202	17		X														
B9.40	B-J		1-4202	18		X														
B9.40	B-J		1-4206	2		X														
B9.40	B-J		1-4207	1		X														
B9.40	B-J		1-4207	2		X														
B9.40	B-J		1-4207	3		X														
B9.40	B-J		1-4207	4		X														
B9.40	B-J		1-4207	5		X								/						
B9.40	B-J		1-4207	6		X								/						
B9.40	B-J		1-4207	7		X								/						
B9.40	B-J		1-4207	8		X								/						
B9.40	B-J		1-4207	9		X														
B9.40	B-J		1-4207	10		X														
B9.40	B-J		1-4207	11		X														
B9.40	B-J		1-4207	12		X														
B9.40	B-J		1-4207	13		X														
B9.40	B-J		1-4207	14		X														
B9.40	B-J		1-4207	15		X														
B9.40	B-J		1-4207	16		X														
B9.40	B-J		1-4207	17		X														
B9.40	B-J		1-4207	18		X														
B9.40	B-J		1-4207	19		X														
B9.40	B-J		1-4207	20		X														
B9.40	B-J		1-4207	21		X														
B9.40	B-J		1-4207	22		X														
B9.40	B-J		1-4207	23		X														
B9.40	B-J		1-4207	24		X														
B9.40	B-J		1-4207	25		X														
B9.40	B-J		1-4207	26		X														
B9.40	B-J		1-4207	27		X														

NSBU COMPONENT SURVEILLANCE SCHEDULE
Westinghouse Proprietary

COMPONENT: PIPE SOCKET WELDS

89	89		INT		EXAMINATION METHOD			FIRST INTERVAL			SECOND INTERVAL			THIRD INTERVAL			FOURTH INTERVAL			
ITEM NUMBER	CATEGORY NUMBER	DESCRIPTION	SKETCH NUMBER	IDENT. NUMBER	VOL.	SUR	VIS.	1ST	2ND	3RD	1ST	2ND	3RD	1ST	2ND	3RD	1ST	2ND	3RD	REMARKS
								PERIOD			PERIOD			PERIOD			PERIOD			
B9.40	B-J		1-4207	28		X														
B9.40	B-J		1-4208	1		X														
B9.40	B-J		1-4208	2		X														
B9.40	B-J		1-4208	3		X														
B9.40	B-J		1-4208	4		X														
B9.40	B-J		1-4208	5		X														
B9.40	B-J		1-4208	6		X														
B9.40	B-J		1-4208	7		X														
B9.40	B-J		1-4208	8		X														
B9.40	B-J		1-4208	9		X														
B9.40	B-J		1-4208	10		X														
B9.40	B-J		1-4208	11		X														
B9.40	B-J		1-4208	12		X														
B9.40	B-J		1-4208	13		X														
B9.40	B-J		1-4209	2		X														
B9.40	B-J		1-4209	3		X								/						
B9.40	B-J		1-4209	4		X								/						
B9.40	B-J		1-4209	5		X								/						
B9.40	B-J		1-4209	6		X								/						
B9.40	B-J		1-4209	7		X														
B9.40	B-J		1-4301	15		X														
B9.40	B-J		1-4301	16		X														
B9.40	B-J		1-4302	1		X										/				
B9.40	B-J		1-4302	2		X										/				
B9.40	B-J		1-4302	3		X										/				
B9.40	B-J		1-4302	4		X										/				
B9.40	B-J		1-4302	5		X										/				
B9.40	B-J		1-4302	6		X										/				
B9.40	B-J		1-4302	7		X														
B9.40	B-J		1-4302	8		X														
B9.40	B-J		1-4302	9		X														

NSBU COMPONENT SURVEILLANCE SCHEDULE
Westinghouse Proprietary

COMPONENT: PIPE SOCKET WELDS

89	89		INT		EXAMINATION METHOD			FIRST INTERVAL			SECOND INTERVAL			THIRD INTERVAL			FOURTH INTERVAL			
ITEM NUMBER	CATEGORY NUMBER	DESCRIPTION	SKETCH NUMBER	IDENT. NUMBER	VOL.	SUR	VIS.	1ST	2ND	3RD	1ST	2ND	3RD	1ST	2ND	3RD	1ST	2ND	3RD	REMARKS
								PERIOD			PERIOD			PERIOD			PERIOD			
B9.40	B-J		1-4302	10		X														
B9.40	B-J		1-4302	11		X														
B9.40	B-J		1-4302	12		X														
B9.40	B-J		1-4302	13		X														
B9.40	B-J		1-4302	14		X														
B9.40	B-J		1-4302	15		X														
B9.40	B-J		1-4302	16		X														
B9.40	B-J		1-4302	17		X														
B9.40	B-J		1-4302	18		X														
B9.40	B-J		1-4302	19		X														
B9.40	B-J		1-4302	20		X									/					
B9.40	B-J		1-4302	21		X									/					
B9.40	B-J		1-4302	22		X									/					
B9.40	B-J		1-4302	23		X									/					
B9.40	B-J		1-4302	24		X									/					
B9.40	B-J		1-4302	25		X									/					
B9.40	B-J		1-4302	26		X									/					
B9.40	B-J		1-4302	27		X									/					
B9.40	B-J		1-4302	28		X									/					
B9.40	B-J		1-4302	29		X									/					
B9.40	B-J		1-4302	30		X														
B9.40	B-J		1-4302	34		X										/				
B9.40	B-J		1-4302	35		X										/				
B9.40	B-J		1-4302	36		X										/				
B9.40	B-J		1-4305	2		X														
B9.40	B-J		1-4306	1		X									/					
B9.40	B-J		1-4306	2		X									/					
B9.40	B-J		1-4306	3		X									/					
B9.40	B-J		1-4306	4		X									/					
B9.40	B-J		1-4306	5		X									/					
B9.40	B-J		1-4306	6		X									/					
B9.40	B-J		1-4306	7		X									/					
B9.40	B-J		1-4306	8		X									/					

NSBU COMPONENT SURVEILLANCE SCHEDULE
Westinghouse Proprietary

COMPONENT: PIPE SOCKET WELDS

89	89		INT		EXAMINATION METHOD			FIRST INTERVAL			SECOND INTERVAL			THIRD INTERVAL			FOURTH INTERVAL			
ITEM NUMBER	CATEGORY NUMBER	DESCRIPTION	SKETCH NUMBER	IDENT. NUMBER	VOL.	SUR	VIS.	1ST	2ND	3RD	1ST	2ND	3RD	1ST	2ND	3RD	1ST	2ND	3RD	REMARKS
								PERIOD			PERIOD			PERIOD			PERIOD			
B9.40	B-J		1-4306	9		X														
B9.40	B-J		1-4306	10		X														
B9.40	B-J		1-4306	11		X														
B9.40	B-J		1-4306	12		X														
B9.40	B-J		1-4306	13		X														
B9.40	B-J		1-4306	14		X														
B9.40	B-J		1-4306	15		X														
B9.40	B-J		1-4306	16		X														
B9.40	B-J		1-4306	17		X														
B9.40	B-J		1-4306	18		X														
B9.40	B-J		1-4306	19		X														
B9.40	B-J		1-4306	20		X														
B9.40	B-J		1-4306	21		X														
B9.40	B-J		1-4306	22		X														
B9.40	B-J		1-4306	23		X														
B9.40	B-J		1-4306	24		X														
B9.40	B-J		1-4306	25		X														
B9.40	B-J		1-4306	26		X														
B9.40	B-J		1-4306	27		X														
B9.40	B-J		1-4306	28		X														
B9.40	B-J		1-4306	29		X														
B9.40	B-J		1-4306	30		X														
B9.40	B-J		1-4306	31		X									/					
B9.40	B-J		1-4306	32		X									/					
B9.40	B-J		1-4306	33		X									/					
B9.40	B-J		1-4306	34		X														
B9.40	B-J		1-4307	1		X										/				
B9.40	B-J		1-4307	2		X										/				
B9.40	B-J		1-4307	3		X										/				
B9.40	B-J		1-4307	4		X										/				
B9.40	B-J		1-4307	5		X										/				
B9.40	B-J		1-4307	6		X										/				
B9.40	B-J		1-4307	7		X										/				
B9.40	B-J		1-4307	8		X														

NSBU COMPONENT SURVEILLANCE SCHEDULE
Westinghouse Proprietary

COMPONENT: PIPE SOCKET WELDS

89	89		INT		EXAMINATION METHOD			FIRST INTERVAL			SECOND INTERVAL			THIRD INTERVAL			FOURTH INTERVAL			
ITEM NUMBER	CATEGORY NUMBER	DESCRIPTION	SKETCH NUMBER	IDENT. NUMBER	VOL.	SUR	VIS.	1ST	2ND	3RD	1ST	2ND	3RD	1ST	2ND	3RD	1ST	2ND	3RD	REMARKS
								PERIOD			PERIOD			PERIOD			PERIOD			
B9.40	B-J		1-4307	9		X														
B9.40	B-J		1-4307	10		X														
B9.40	B-J		1-4308	2		X														
B9.40	B-J		1-4308	3		X														
B9.40	B-J		1-4308	4		X														
B9.40	B-J		1-4308	5		X														
B9.40	B-J		1-4308	6		X														
B9.40	B-J		1-4308	7		X														
B9.40	B-J		1-4401	14		X														
B9.40	B-J		1-4401	15		X														
B9.40	B-J		1-4405	2		X														
B9.40	B-J		1-4406	1		X									/					
B9.40	B-J		1-4406	2		X									/					
B9.40	B-J		1-4406	3		X									/					
B9.40	B-J		1-4406	4		X									/					
B9.40	B-J		1-4406	5		X									/					
B9.40	B-J		1-4406	6		X									/					
B9.40	B-J		1-4406	7		X														
B9.40	B-J		1-4406	8		X										/				
B9.40	B-J		1-4406	9		X										/				
B9.40	B-J		1-4406	10		X														
B9.40	B-J		1-4406	11		X														
B9.40	B-J		1-4406	12		X														
B9.40	B-J		1-4406	13		X														
B9.40	B-J		1-4406	14		X														
B9.40	B-J		1-4406	15		X														
B9.40	B-J		1-4406	16		X														
B9.40	B-J		1-4406	17		X														
B9.40	B-J		1-4406	18		X														
B9.40	B-J		1-4406	19		X														
B9.40	B-J		1-4406	20		X														
B9.40	B-J		1-4406	21		X														

NSBU COMPONENT SURVEILLANCE SCHEDULE
Westinghouse Proprietary

COMPONENT: PIPE SOCKET WELDS

89	89		INT		EXAMINATION METHOD			FIRST INTERVAL			SECOND INTERVAL			THIRD INTERVAL			FOURTH INTERVAL			
ITEM NUMBER	CATEGORY NUMBER	DESCRIPTION	SKETCH NUMBER	IDENT. NUMBER	VOL.	SUR	VIS.	1ST	2ND	3RD	1ST	2ND	3RD	1ST	2ND	3RD	1ST	2ND	3RD	REMARKS
								PERIOD			PERIOD			PERIOD			PERIOD			
B9.40	B-J		1-4406	22		X														
B9.40	B-J		1-4406	23		X														
B9.40	B-J		1-4406	24		X														
B9.40	B-J		1-4406	25		X														
B9.40	B-J		1-4406	26		X														
B9.40	B-J		1-4406	27		X														
B9.40	B-J		1-4406	28		X														
B9.40	B-J		1-4406	29		X														
B9.40	B-J		1-4406	30		X														
B9.40	B-J		1-4406	31		X														
B9.40	B-J		1-4407	1		X										/				
B9.40	B-J		1-4407	2		X										/				
B9.40	B-J		1-4407	3		X										/				
B9.40	B-J		1-4407	4		X										/				
B9.40	B-J		1-4407	5		X														
B9.40	B-J		1-4407	6		X														
B9.40	B-J		1-4407	7		X														
B9.40	B-J		1-4407	8		X														
B9.40	B-J		1-4407	9		X														
B9.40	B-J		1-4407	10		X														
B9.40	B-J		1-4407	11		X														
B9.40	B-J		1-4407	12		X														
B9.40	B-J		1-4408	2		X														
B9.40	B-J		1-4408	3		X														
B9.40	B-J		1-4408	4		X														
B9.40	B-J		1-4408	5		X														
B9.40	B-J		1-4408	6		X														
B9.40	B-J		1-4408	7		X														
B9.40	B-J		1-4508	1		X														
B9.40	B-J		1-4508	2		X														
B9.40	B-J		1-4508	3		X														
B9.40	B-J		1-4508	4		X														

NSBU COMPONENT SURVEILLANCE SCHEDULE
Westinghouse Proprietary

COMPONENT: PIPE SOCKET WELDS

89	89		INT		EXAMINATION METHOD			FIRST INTERVAL			SECOND INTERVAL			THIRD INTERVAL			FOURTH INTERVAL			
ITEM NUMBER	CATEGORY NUMBER	DESCRIPTION	SKETCH NUMBER	IDENT. NUMBER	VOL.	SUR	VIS.	1ST	2ND	3RD	1ST	2ND	3RD	1ST	2ND	3RD	1ST	2ND	3RD	REMARKS
								PERIOD			PERIOD			PERIOD			PERIOD			
B9.40	B-J		1-4508	5		X														
B9.40	B-J		1-4508	6		X														
B9.40	B-J		1-4508	7		X														
B9.40	B-J		1-4508	8		X														
B9.40	B-J		1-4508	9		X														
B9.40	B-J		1-4508	10		X														
B9.40	B-J		1-4508	11		X														
B9.40	B-J		1-4508	12		X														
B9.40	B-J		1-4508	13		X														
B9.40	B-J		1-4508	14		X														
B9.40	B-J		1-4508	15		X														
B9.40	B-J		1-4508	16		X														
B9.40	B-J		1-4508	17		X														
B9.40	B-J		1-4508	18		X														
B9.40	B-J		1-4508	19		X														
B9.40	B-J		1-4508	20		X														
B9.40	B-J		1-4508	21		X														
B9.40	B-J		1-4508	22		X														
B9.40	B-J		1-4508	23		X														
B9.40	B-J		1-4508	24		X														
B9.40	B-J		1-4508	25		X														
B9.40	B-J		1-4508	26		X														
B9.40	B-J		1-4508	27		X														
B9.40	B-J		1-4508	28		X														
TOTAL ID'S FOR B9.40				317	0	317	0	TOTAL SCHEDULED						29	27	28				
								TOTAL COMPLETED						0	0	0				

NSBU COMPONENT SURVEILLANCE SCHEDULE
Westinghouse Proprietary

COMPONENT: PIPE INTEGRALLY WELDED SUPPORTS

89	89		INT		EXAMINATION METHOD			FIRST INTERVAL			SECOND INTERVAL			THIRD INTERVAL			FOURTH INTERVAL			
ITEM NUMBER	CATEGORY NUMBER	DESCRIPTION	SKETCH NUMBER	IDENT. NUMBER	VOL.	SUR	VIS.	1ST	2ND	3RD	1ST	2ND	3RD	1ST	2ND	3RD	1ST	2ND	3RD	REMARKS
								PERIOD			PERIOD			PERIOD			PERIOD			
B10.10	B-K-1		1-4201	AC-H-10-3		X														REFERENCE TABLE 4.0
B10.10	B-K-1		1-4202	SI-H-168		X														
B10.10	B-K-1		1-4501	RC-H-342		X														
B10.10	B-K-1		1-4502	RC-H-343		X								/						
B10.10	B-K-1		1-4503	RC-H-344		X														
B10.10	B-K-1		1-4507	RC-H-61-9		X														
TOTAL ID'S FOR B10.10				6	0	6	0	TOTAL SCHEDULED						1	0	0				
								TOTAL COMPLETED						0	0	0				

NSBU COMPONENT SURVEILLANCE SCHEDULE
Westinghouse Proprietary

COMPONENT: PUMP INTEGRALLY WELDED SUPPORTS

89	89		INT		EXAMINATION METHOD			FIRST INTERVAL			SECOND INTERVAL			THIRD INTERVAL			FOURTH INTERVAL			
ITEM NUMBER	CATEGORY NUMBER	DESCRIPTION	SKETCH NUMBER	IDENT. NUMBER	VOL.	SUR	VIS.	1ST	2ND	3RD	1ST	2ND	3RD	1ST	2ND	3RD	1ST	2ND	3RD	REMARKS
								PERIOD			PERIOD			PERIOD			PERIOD			
B10.20	B-K-1		1-5100	31-1SC		X								/						REFERENCE TABLE 4.0
B10.20	B-K-1		1-5100	31-2SC		X								/						
B10.20	B-K-1		1-5100	31-3SC		X								/						
B10.20	B-K-1		1-5100	32-1SC		X														
B10.20	B-K-1		1-5100	32-2SC		X														
B10.20	B-K-1		1-5100	32-3SC		X														
B10.20	B-K-1		1-5100	33-1SC		X														
B10.20	B-K-1		1-5100	33-2SC		X														
B10.20	B-K-1		1-5100	33-3SC		X														
B10.20	B-K-1		1-5100	34-1SC		X														
B10.20	B-K-1		1-5100	34-2SC		X														
B10.20	B-K-1		1-5100	34-3SC		X														
TOTAL ID'S FOR B10.20				12	0	12	0	TOTAL SCHEDULED						3	0	0				
								TOTAL COMPLETED						0	0	0				

NUCLEAR SERVICES BUSINESS UNIT

Page 79

NSBU COMPONENT SURVEILLANCE SCHEDULE

Westinghouse Proprietary

COMPONENT: : PUMP CASTING WELDS

89 ITEM NUMBER	89 CATEGORY NUMBER	DESCRIPTION	SKETCH NUMBER	INT IDENT. NUMBER	EXAMINATION METHOD VOL.	SUR.	VIS.	FIRST INTERVAL 1ST	2ND	3RD	SECOND INTERVAL 1ST	2ND	3RD	THIRD INTERVAL 1ST	2ND	3RD	FOURTH INTERVAL 1ST	2ND	3RD	REMARKS
								PERIOD			PERIOD			PERIOD			PERIOD			
B12.10	B-L-1		1-5100	31-1			X									/				VT-1 EXTERNAL SURFACE
B12.10	B-L-1		1-5100	31-2			X									/				VT-1 EXTERNAL SURFACE
B12.10	B-L-1		1-5100	31-3			X									/				VT-1 EXTERNAL SURFACE
B12.10	B-L-1		1-5100	32-1			X													Reference Table 4.0
B12.10	B-L-1		1-5100	32-2			X													
B12.10	B-L-1		1-5100	32-3			X													
B12.10	B-L-1		1-5100	33-1			X													
B12.10	B-L-1		1-5100	33-2			X													
B12.10	B-L-1		1-5100	33-3			X													
B12.10	B-L-1		1-5100	34-1			X													
B12.10	B-L-1		1-5100	34-2			X													
B12.10	B-L-1		1-5100	34-3			X													
																				VT-3 REQUIRED ON PUMP INTERNAL SURFACES WHEN PUMP IS DISASSEMBLED. CODE CASE N481 APPLIES FOR ALL B-L-1 ITEMS.
TOTAL ID'S FOR B12.10				12	0	0	12	TOTAL SCHEDULED						0	0	3				
								TOTAL COMPLETED						0	0	0				

7/18/00

Revision 0

NSBU COMPONENT SURVEILLANCE SCHEDULE
Westinghouse Proprietary

COMPONENT: PUMP CASING

89	89		INT		EXAMINATION METHOD			FIRST INTERVAL			SECOND INTERVAL			THIRD INTERVAL			FOURTH INTERVAL			
ITEM NUMBER	CATEGORY NUMBER	DESCRIPTION	SKETCH NUMBER	IDENT. NUMBER	VOL.	SUR	VIS.	1ST	2ND	3RD	1ST	2ND	3RD	1ST	2ND	3RD	1ST	2ND	3RD	REMARKS
								PERIOD			PERIOD			PERIOD			PERIOD			
B12.20	B-L-2		1-5100	CASING 31			X													VT-3 REQUIRED
B12.20	B-L-2		1-5100	CASING 32			X													WHEN DISASSEMBLED
B12.20	B-L-2		1-5100	CASING 33			X													INTERNAL SURFACES
B12.20	B-L-2		1-5100	CASING 34			X													Reference Table 4.0
TOTAL ID'S FOR B12.20				4	0	0	4	TOTAL SCHEDULED						0	0	0				
								TOTAL COMPLETED						0	0	0				

NSBU COMPONENT SURVEILLANCE SCHEDULE
Westinghouse Proprietary

COMPONENT: VALVE BODIES EXCEEDING 4" NPS

89	89		INT		EXAMINATION METHOD			FIRST INTERVAL			SECOND INTERVAL			THIRD INTERVAL			FOURTH INTERVAL			
ITEM NUMBER	CATEGORY NUMBER	DESCRIPTION	SKETCH NUMBER	IDENT. NUMBER	VOL.	SUR	VIS.	1ST	2ND	3RD	1ST	2ND	3RD	1ST	2ND	3RD	1ST	2ND	3RD	REMARKS
								PERIOD			PERIOD			PERIOD			PERIOD			
B12.50	B-M-2		1-4101	838A INT.			X													VT-3. REF. TABLE 4.0
B12.50	B-M-2		1-4101	895A INT.			X													REQUIRED ONLY
B12.50	B-M-2		1-4101	897A INT.			X													WHEN VALVES ARE
																				DISASSEMBLED FOR
B12.50	B-M-2		1-4201	730 INT.			X													MAITENANCE OR
B12.50	B-M-2		1-4201	731 INT.			X													REPAIR
B12.50	B-M-2		1-4202	838B INT.			X													
B12.50	B-M-2		1-4202	895B INT.			X													
B12.50	B-M-2		1-4202	897B INT.			X													
B12.50	B-M-2		1-4301	838C INT.			X													
B12.50	B-M-2		1-4301	895C INT.			X													
B12.50	B-M-2		1-4301	897C INT.			X													
B12.50	B-M-2		1-4401	838D INT.			X													
B12.50	B-M-2		1-4401	895D INT.			X													
B12.50	B-M-2		1-4401	897D INT.			X													
B12.50	B-M-2		1-4501	PCV464 INT.			X													
B12.50	B-M-2		1-4502	PCV466 INT.			X													
B12.50	B-M-2		1-4503	PCV468 INT.			X													
								TOTAL SCHEDULED						0	0	0				
TOTAL ID'S FOR B12.50				17	0	0	17	TOTAL COMPLETED						0	0	0				

NSBU COMPONENT SURVEILLANCE SCHEDULE
Westinghouse Proprietary

COMPONENT: REACTOR VESSEL INTERIOR

89	89		INT		EXAMINATION METHOD			FIRST INTERVAL			SECOND INTERVAL			THIRD INTERVAL			FOURTH INTERVAL			
ITEM NUMBER	CATEGORY NUMBER	DESCRIPTION	SKETCH NUMBER	IDENT. NUMBER	VOL.	SUR	VIS.	1ST	2ND	3RD	1ST	2ND	3RD	1ST	2ND	3RD	1ST	2ND	3RD	REMARKS
								PERIOD			PERIOD			PERIOD			PERIOD			
B13.10	B-N-1		1-1200	VESS. INT.			X							/	/	/				Reference Table 4.0 VT-3
TOTAL SCHEDULED														1	1	1				
TOTAL ID'S FOR B13.10				1	0	0	1	TOTAL COMPLETED						0	0	0				

NSBU COMPONENT SURVEILLANCE SCHEDULE

COMPONENT: R.V. INTERIOR ATTACHMENTS WITHIN BELTLINE REGION

89	89		INT		EXAMINATION METHOD			FIRST INTERVAL			SECOND INTERVAL			THIRD INTERVAL			FOURTH INTERVAL			
ITEM NUMBER	CATEGORY NUMBER	DESCRIPTION	SKETCH NUMBER	IDENT. NUMBER	VOL.	SUR	VIS.	1ST	2ND	3RD	1ST	2ND	3RD	1ST	2ND	3RD	1ST	2ND	3RD	REMARKS
								PERIOD			PERIOD			PERIOD			PERIOD			
B13.50	B-N-2																			
TOTAL SCHEDULED														0	0	0				
TOTAL ID'S FOR B13.50				0	0	0	0	TOTAL COMPLETED						0	0	0				

NSBU COMPONENT SURVEILLANCE SCHEDULE

COMPONENT: R.V. INTERIOR ATTACHMENTS WITHIN BELTLINE REGION

89	89		INT		EXAMINATION METHOD			FIRST INTERVAL			SECOND INTERVAL			THIRD INTERVAL			FOURTH INTERVAL			
ITEM NUMBER	CATEGORY NUMBER	DESCRIPTION	SKETCH NUMBER	IDENT. NUMBER	VOL.	SUR	VIS.	1ST	2ND	3RD	1ST	2ND	3RD	1ST	2ND	3RD	1ST	2ND	3RD	REMARKS
								PERIOD			PERIOD			PERIOD			PERIOD			
B13.60	B-N-2		1-1200	INT. ATTACH																
TOTAL ID'S FOR B13.60				0	0	0	0	TOTAL SCHEDULED						0	0	0				
								TOTAL COMPLETED						0	0	0				

NSBU COMPONENT SURVEILLANCE SCHEDULE
Westinghouse Proprietary

COMPONENT: R.V. CORE SUPPORT STRUCTURE

89	89		INT		EXAMINATION METHOD			FIRST INTERVAL			SECOND INTERVAL			THIRD INTERVAL			FOURTH INTERVAL			
ITEM NUMBER	CATEGORY NUMBER	DESCRIPTION	SKETCH NUMBER	IDENT. NUMBER	VOL.	SUR	VIS.	1ST	2ND	3RD	1ST	2ND	3RD	1ST	2ND	3RD	1ST	2ND	3RD	REMARKS
								PERIOD			PERIOD			PERIOD			PERIOD			
B13.70	B-N-3		1-1200	CORE SUPP.			X									/				Reference Table 4.0 VT-3
TOTAL ID'S FOR B13.70				1	0	0	1	TOTAL SCHEDULED						0	0	1				
								TOTAL COMPLETED						0	0	0				

NSBU COMPONENT SURVEILLANCE SCHEDULE
Westinghouse Proprietary

COMPONENT: R.V. WELDS IN CRD HOUSING

89	89		INT		EXAMINATION METHOD			FIRST INTERVAL			SECOND INTERVAL			THIRD INTERVAL			FOURTH INTERVAL			
ITEM NUMBER	CATEGORY NUMBER	DESCRIPTION	SKETCH NUMBER	IDENT. NUMBER	VOL.	SUR	VIS.	1ST	2ND	3RD	1ST	2ND	3RD	1ST	2ND	3RD	1ST	2ND	3RD	REMARKS
								PERIOD			PERIOD			PERIOD			PERIOD			
B14.10	B-0		1-1300	45		X										/				10% OF ALL CRD
B14.10	B-0		1-1300	46		X														HOUSING WELDS
B14.10	B-0		1-1300	47		X														Reference Table 4.0
B14.10	B-0		1-1300	48		X														
B14.10	B-0		1-1300	49		X														
B14.10	B-0		1-1300	50		X														
B14.10	B-0		1-1300	51		X														
B14.10	B-0		1-1300	52		X														
B14.10	B-0		1-1300	53		X														
B14.10	B-0		1-1300	54		X														
B14.10	B-0		1-1300	55		X														
B14.10	B-0		1-1300	56		X														
B14.10	B-0		1-1300	57		X														
B14.10	B-0		1-1300	58		X										/				
B14.10	B-0		1-1300	59		X														
B14.10	B-0		1-1300	60		X														
B14.10	B-0		1-1300	61		X														
B14.10	B-0		1-1300	62		X										/				
B14.10	B-0		1-1300	63		X														
B14.10	B-0		1-1300	64		X														
B14.10	B-0		1-1300	65		X														
B14.10	B-0		1-1300	66		X														
B14.10	B-0		1-1300	67		X														
B14.10	B-0		1-1300	68		X														
B14.10	B-0		1-1300	69		X										/				
B14.10	B-0		1-1300	70		X														
B14.10	B-0		1-1300	71		X														
B14.10	B-0		1-1300	72		X														
B14.10	B-0		1-1300	73		X														
B14.10	B-0		1-1300	74		X														
B14.10	B-0		1-1300	75		X														
B14.10	B-0		1-1300	76		X														
B14.10	B-0		1-1300	77		X														
B14.10	B-0		1-1300	78		X														
TOTAL ID'S FOR B14.10				34	0	34	0	TOTAL SCHEDULED						0	0	4				
								TOTAL COMPLETED						0	0	0				

NSBU COMPONENT SURVEILLANCE SCHEDULE
Westinghouse Proprietary

COMPONENT: R.V. PRESSURE RETAINING BOUNDARY

89	89		INT		EXAMINATION METHOD			FIRST INTERVAL			SECOND INTERVAL			THIRD INTERVAL			FOURTH INTERVAL			
ITEM NUMBER	CATEGORY NUMBER	DESCRIPTION	SKETCH NUMBER	IDENT. NUMBER	VOL.	SUR	VIS.	1ST	2ND	3RD	1ST	2ND	3RD	1ST	2ND	3RD	1ST	2ND	3RD	REMARKS
								PERIOD			PERIOD			PERIOD			PERIOD			
B15.10	B-P		1-9100	Reference IWB-5000			X							/	/	/				VT-2, REF. TABLE 4.0
																				EACH REFUELING
																				OUTAGE
																				Reference Table 4.0
TOTAL ID'S FOR B15.10				1	0	0	1	TOTAL SCHEDULED						1	1	1				
								TOTAL COMPLETED						0	0	0				

NSBU COMPONENT SURVEILLANCE SCHEDULE
Westinghouse Proprietary

COMPONENT: R.V. PRESSURE RETAINING BOUNDARY

89	89		INT		EXAMINATION METHOD			FIRST INTERVAL			SECOND INTERVAL			THIRD INTERVAL			FOURTH INTERVAL			
ITEM NUMBER	CATEGORY NUMBER	DESCRIPTION	SKETCH NUMBER	IDENT. NUMBER	VOL.	SUR	VIS.	1ST	2ND	3RD	1ST	2ND	3RD	1ST	2ND	3RD	1ST	2ND	3RD	REMARKS
								PERIOD			PERIOD			PERIOD			PERIOD			
B15.11	B-P		1-9600	Reference IWB-5000			X									/				VT-2. REF. TABLE 4.0 Code Case N-498-1 Applies
TOTAL ID'S FOR B15.11				1	0	0	1	TOTAL SCHEDULED						0	0	1				
								TOTAL COMPLETED						0	0	0				

NSBU COMPONENT SURVEILLANCE SCHEDULE
Westinghouse Proprietary

COMPONENT: PRESSURIZER - PRESSURE RETAINING BOUNDARY

89	89		INT		EXAMINATION METHOD			FIRST INTERVAL			SECOND INTERVAL			THIRD INTERVAL			FOURTH INTERVAL			
ITEM NUMBER	CATEGORY NUMBER	DESCRIPTION	SKETCH NUMBER	IDENT. NUMBER	VOL.	SUR	VIS.	1ST	2ND	3RD	1ST	2ND	3RD	1ST	2ND	3RD	1ST	2ND	3RD	REMARKS
								PERIOD			PERIOD			PERIOD			PERIOD			
B15.20	B-P		1-9100	Reference IWB-5000			X							/	/	/				VT-2. REF. TABLE 4.0 EACH REFUELING OUTAGE
TOTAL ID'S FOR B15.20				1	0	0	1	TOTAL SCHEDULED						1	1	1				
								TOTAL COMPLETED						0	0	0				

NSBU COMPONENT SURVEILLANCE SCHEDULE
Westinghouse Proprietary

COMPONENT: PRESSURIZER - PRESSURE RETAINING BOUNDARY

89	89		INT		EXAMINATION METHOD			FIRST INTERVAL			SECOND INTERVAL			THIRD INTERVAL			FOURTH INTERVAL			
ITEM NUMBER	CATEGORY NUMBER	DESCRIPTION	SKETCH NUMBER	IDENT. NUMBER	VOL.	SUR	VIS.	1ST	2ND	3RD	1ST	2ND	3RD	1ST	2ND	3RD	1ST	2ND	3RD	REMARKS
								PERIOD			PERIOD			PERIOD			PERIOD			
B15.21	B-P		1-9600	Reference IWB-5000			X									/				VT-2. REF. TABLE 4.0
																				Code Case N-498-1 Applies
TOTAL ID'S FOR B15.21				1	0	0	1	TOTAL SCHEDULED						0	0	1				
								TOTAL COMPLETED						0	0	0				

NSBU COMPONENT SURVEILLANCE SCHEDULE
Westinghouse Proprietary

COMPONENT: STM. GEN. PRESSURE RETAINING BOUNDARY

89	89		INT		EXAMINATION METHOD			FIRST INTERVAL			SECOND INTERVAL			THIRD INTERVAL			FOURTH INTERVAL			
ITEM NUMBER	CATEGORY NUMBER	DESCRIPTION	SKETCH NUMBER	IDENT. NUMBER	VOL.	SUR	VIS.	1ST	2ND	3RD	1ST	2ND	3RD	1ST	2ND	3RD	1ST	2ND	3RD	REMARKS
								PERIOD			PERIOD			PERIOD			PERIOD			
B15.30	B-P		1-9100	Reference IWB-5000			X							/	/	/				VT-2. REF. TABLE 4.0 EACH REFUELING OUTAGE
TOTAL ID'S FOR B15.30				1	0	0	1	TOTAL SCHEDULED						1	1	1				
								TOTAL COMPLETED						0	0	0				

NSBU COMPONENT SURVEILLANCE SCHEDULE
Westinghouse Proprietary

COMPONENT: STM. GEN. PRESSURE RETAINING BOUNDARY

89	89		INT		EXAMINATION METHOD			FIRST INTERVAL			SECOND INTERVAL			THIRD INTERVAL			FOURTH INTERVAL			
ITEM NUMBER	CATEGORY NUMBER	DESCRIPTION	SKETCH NUMBER	IDENT. NUMBER	VOL.	SUR	VIS.	1ST	2ND	3RD	1ST	2ND	3RD	1ST	2ND	3RD	1ST	2ND	3RD	REMARKS
								PERIOD			PERIOD			PERIOD			PERIOD			
B15.31	B-P		1-9600	Reference IWB-5000			X									/				VT-2. REF. TABLE 4.0
																				Code Case N-498-1 Applies
TOTAL SCHEDULED														0	0	1				
TOTAL ID'S FOR B15.31				1	0	0	1	TOTAL COMPLETED						0	0	0				

NSBU COMPONENT SURVEILLANCE SCHEDULE
Westinghouse Proprietary

COMPONENT: PIPING PRESSURE RETAINING BOUNDARY

89	89		INT		EXAMINATION METHOD			FIRST INTERVAL			SECOND INTERVAL			THIRD INTERVAL			FOURTH INTERVAL			
ITEM NUMBER	CATEGORY NUMBER	DESCRIPTION	SKETCH NUMBER	IDENT. NUMBER	VOL.	SUR	VIS.	1ST	2ND	3RD	1ST	2ND	3RD	1ST	2ND	3RD	1ST	2ND	3RD	REMARKS
								PERIOD			PERIOD			PERIOD			PERIOD			
B15.50	B-P		1-9100	Reference IWB-5000			X							/	/	/				VT-2, REF TABLE 4.0 EACH REFUELING OUTAGE
TOTAL ID'S FOR B15.50				1	0	0	1	TOTAL SCHEDULED						1	1	1				
								TOTAL COMPLETED						0	0	0				

NSBU COMPONENT SURVEILLANCE SCHEDULE
Westinghouse Proprietary

COMPONENT: PIPING PRESSURE RETAINING BOUNDARY

89	89		INT		EXAMINATION METHOD			FIRST INTERVAL			SECOND INTERVAL			THIRD INTERVAL			FOURTH INTERVAL			
ITEM NUMBER	CATEGORY NUMBER	DESCRIPTION	SKETCH NUMBER	IDENT. NUMBER	VOL.	SUR	VIS.	1ST	2ND	3RD	1ST	2ND	3RD	1ST	2ND	3RD	1ST	2ND	3RD	REMARKS
								PERIOD			PERIOD			PERIOD			PERIOD			
B15.51	B-P		1-9600	Reference IWB-5000			X									/				VT-2. REF. TABLE 4.0
																				Code Case N-498-1 Applies
TOTAL ID'S FOR B15.51				1	0	0	1	TOTAL SCHEDULED						0	0	1				
								TOTAL COMPLETED						0	0	0				

NSBU COMPONENT SURVEILLANCE SCHEDULE
Westinghouse Proprietary

COMPONENT: PUMP PRESSURE RETAINING BOUNDARY

89	89		INT		EXAMINATION METHOD			FIRST INTERVAL			SECOND INTERVAL			THIRD INTERVAL			FOURTH INTERVAL			
ITEM NUMBER	CATEGORY NUMBER	DESCRIPTION	SKETCH NUMBER	IDENT. NUMBER	VOL.	SUR	VIS.	1ST	2ND	3RD	1ST	2ND	3RD	1ST	2ND	3RD	1ST	2ND	3RD	REMARKS
								PERIOD			PERIOD			PERIOD			PERIOD			
B15.60	B-P		1-9100	Reference IWB-5000			X							/	/	/				VT-2. REF. TABLE 4.0 EACH REFUELING OUTAGE
TOTAL ID'S FOR B15.60				1	0	0	1	TOTAL SCHEDULED						1	1	1				
								TOTAL COMPLETED						0	0	0				

NSBU COMPONENT SURVEILLANCE SCHEDULE
Westinghouse Proprietary

COMPONENT: PUMP PRESSURE RETAINING BOUNDARY

89	89		INT		EXAMINATION METHOD			FIRST INTERVAL			SECOND INTERVAL			THIRD INTERVAL			FOURTH INTERVAL			
ITEM NUMBER	CATEGORY NUMBER	DESCRIPTION	SKETCH NUMBER	IDENT. NUMBER	VOL.	SUR	VIS.	1ST	2ND	3RD	1ST	2ND	3RD	1ST	2ND	3RD	1ST	2ND	3RD	REMARKS
								PERIOD			PERIOD			PERIOD			PERIOD			
B15.61	B-P		1-9600	W31-1			X									/				CODE CASE N-481 APPLIES
B15.61	B-P		1-9600	W31-2			X									/				CODE CASE N-481 APPLIES
B15.61	B-P		1-9600	W31-3			X									/				CODE CASE N-481 APPLIES
B15.61	B-P		1-9600	Reference IWB-5000			X									/				VT-2. REF. TABLE 4.0 Code Case N-498-1 Applies
TOTAL ID'S FOR B15.61				4	0	0	4	TOTAL SCHEDULED						0	0	4				
								TOTAL COMPLETED						0	0	0				

NSBU COMPONENT SURVEILLANCE SCHEDULE
Westinghouse Proprietary

COMPONENT: VALVE PRESSURE RETAINING BOUNDARY

89	89		INT		EXAMINATION METHOD			FIRST INTERVAL			SECOND INTERVAL			THIRD INTERVAL			FOURTH INTERVAL			
ITEM NUMBER	CATEGORY NUMBER	DESCRIPTION	SKETCH NUMBER	IDENT. NUMBER	VOL.	SUR	VIS.	1ST	2ND	3RD	1ST	2ND	3RD	1ST	2ND	3RD	1ST	2ND	3RD	REMARKS
								PERIOD			PERIOD			PERIOD			PERIOD			
B15.70	B-P		1-9100	Reference IWB-5000			X							/	/	/				VT-2. REF. TABLE 4.0 EACH REFUELING OUTAGE
TOTAL ID'S FOR B15.70				1	0	0	1	TOTAL SCHEDULED						1	1	1				
								TOTAL COMPLETED						0	0	0				

NSBU COMPONENT SURVEILLANCE SCHEDULE
Westinghouse Proprietary

COMPONENT: VALVE PRESSURE RETAINING BOUNDARY

89	89		INT		EXAMINATION METHOD			FIRST INTERVAL			SECOND INTERVAL			THIRD INTERVAL			FOURTH INTERVAL			
ITEM NUMBER	CATEGORY NUMBER	DESCRIPTION	SKETCH NUMBER	IDENT. NUMBER	VOL.	SUR	VIS.	1ST	2ND	3RD	1ST	2ND	3RD	1ST	2ND	3RD	1ST	2ND	3RD	REMARKS
								PERIOD			PERIOD			PERIOD			PERIOD			
B15.71	B-P		1-9600	Reference IWB-5000			X									/				VT-2. REF. TABLE 4.0
																				Code Case N-498-1 Applies
TOTAL ID'S FOR B15.71				1	0	0	1	TOTAL SCHEDULED						0	0	1				
								TOTAL COMPLETED						0	0	0				

NSBU COMPONENT SURVEILLANCE SCHEDULE
Westinghouse Proprietary

COMPONENT: STM. GEN. TUBING - U - TUBE DESIGN

89	89		INT		EXAMINATION METHOD			FIRST INTERVAL			SECOND INTERVAL			THIRD INTERVAL			FOURTH INTERVAL			
ITEM NUMBER	CATEGORY NUMBER	DESCRIPTION	SKETCH NUMBER	IDENT. NUMBER	VOL.	SUR	VIS.	1ST	2ND	3RD	1ST	2ND	3RD	1ST	2ND	3RD	1ST	2ND	3RD	REMARKS
								PERIOD			PERIOD			PERIOD			PERIOD			
B16.20	B-Q		1-3101	U-TUBING	X															REFERENCE TABLE 4.0
TOTAL ID'S FOR B16.20				1	1	0	0	TOTAL SCHEDULED						0	0	0				
								TOTAL COMPLETED						0	0	0				

NSBU COMPONENT SURVEILLANCE SCHEDULE
Westinghouse Proprietary

COMPONENT: *** CLASS TOTALS FOR IWB ***

89	89		INT		EXAMINATION METHOD			FIRST INTERVAL			SECOND INTERVAL			THIRD INTERVAL			FOURTH INTERVAL			
ITEM NUMBER	CATEGORY NUMBER	DESCRIPTION	SKETCH NUMBER	IDENT. NUMBER	VOL.	SUR	VIS.	1ST	2ND	3RD	1ST	2ND	3RD	1ST	2ND	3RD	1ST	2ND	3RD	REMARKS
								PERIOD			PERIOD			PERIOD			PERIOD			
								TOTAL SCHEDULED						219	263	305				
CLASS TOTALS				1495	486	805	473	TOTAL COMPLETED						0	0	0				

NSBU COMPONENT SURVEILLANCE SCHEDULE

Westinghouse Proprietary

COMPONENT:

89	89		INT		EXAMINATION METHOD			FIRST INTERVAL			SECOND INTERVAL			THIRD INTERVAL			FOURTH INTERVAL			
ITEM NUMBER	CATEGORY NUMBER	DESCRIPTION	SKETCH NUMBER	IDENT. NUMBER	VOL.	SUR	VIS.	1ST	2ND	3RD	1ST	2ND	3RD	1ST	2ND	3RD	1ST	2ND	3RD	REMARKS
								PERIOD			PERIOD			PERIOD			PERIOD			
TOTAL ID'S FOR				0	0	0	0	TOTAL SCHEDULED						0	0	0				
								TOTAL COMPLETED						0	0	0				

This Page Intentionally Left Blank

NUCLEAR SERVICES BUSINESS UNIT

NSBU COMPONENT SURVEILLANCE SCHEDULE

Westinghouse Proprietary

COMPONENT: VESSEL SHELL CIRCUMFERENTIAL WELDS

89	89		INT		EXAMINATION METHOD			FIRST INTERVAL			SECOND INTERVAL			THIRD INTERVAL			FOURTH INTERVAL			
ITEM NUMBER	CATEGORY NUMBER	DESCRIPTION	SKETCH NUMBER	IDENT. NUMBER	VOL.	SUR	VIS.	1ST	2ND	3RD	1ST	2ND	3RD	1ST	2ND	3RD	1ST	2ND	3RD	REMARKS
								PERIOD			PERIOD			PERIOD			PERIOD			
																				REFERENCE TABLE 4.0
C1.10	C-A		2-1101	31-3	X										/					
C1.10	C-A		2-1101	31-5	X										/					
C1.10	C-A		2-1101	31-6	X										/					
C1.10	C-A		2-1101	32-3	X															
C1.10	C-A		2-1101	32-5	X															
C1.10	C-A		2-1101	32-6	X															
C1.10	C-A		2-1101	33-3	X															
C1.10	C-A		2-1101	33-5	X															
C1.10	C-A		2-1101	33-6	X															
C1.10	C-A		2-1101	34-3	X															
C1.10	C-A		2-1101	34-5	X															
C1.10	C-A		2-1101	34-6	X															
C1.10	C-A		2-1120	31-2	X									/						
C1.10	C-A		2-1120	32-2	X															
C1.10	C-A		2-1140	2	X									/						
C1.10	C-A		2-1150	2	X											/				
C1.10	C-A		2-1300	31-2	X											/				
C1.10	C-A		2-1300	32-2	X															
TOTAL ID'S FOR C1.10				18	18	0	0	TOTAL SCHEDULED						2	3	2				
								TOTAL COMPLETED						0	0	0				

NSBU COMPONENT SURVEILLANCE SCHEDULE
Westinghouse Proprietary

COMPONENT: VESSEL HEAD CIRCUMFERENTIAL WELDS

89	89		INT		EXAMINATION METHOD			FIRST INTERVAL			SECOND INTERVAL			THIRD INTERVAL			FOURTH INTERVAL			
ITEM NUMBER	CATEGORY NUMBER	DESCRIPTION	SKETCH NUMBER	IDENT. NUMBER	VOL.	SUR	VIS.	1ST	2ND	3RD	1ST	2ND	3RD	1ST	2ND	3RD	1ST	2ND	3RD	REMARKS
								PERIOD			PERIOD			PERIOD			PERIOD			
C1.20	C-A		2-1101	31-8	X											/				
C1.20	C-A		2-1101	32-8	X															REFERENCE TABLE 4.0
C1.20	C-A		2-1101	33-8	X															REFERENCE TABLE 4.0
C1.20	C-A		2-1101	34-8	X															REFERENCE TABLE 4.0
C1.20	C-A		2-1110	1	X															
C1.20	C-A		2-1110	4	X															
C1.20	C-A		2-1110	5	X															
C1.20	C-A		2-1110	8	X															
C1.20	C-A		2-1110	9	X											/				
C1.20	C-A		2-1110	12	X											/				
C1.20	C-A		2-1120	31-1	X									/						
C1.20	C-A		2-1120	32-1	X															
C1.20	C-A		2-1140	1	X									/						
C1.20	C-A		2-1150	1	X										/					
C1.20	C-A		2-1300	31-1	X										/					
C1.20	C-A		2-1300	32-1	X															
TOTAL ID'S FOR C1.20				16	16	0	0	TOTAL SCHEDULED						2	2	3				
								TOTAL COMPLETED						0	0	0				

NSBU COMPONENT SURVEILLANCE SCHEDULE
Westinghouse Proprietary

COMPONENT: VESSEL TUBESHEET-TO-SHELL WELDS

89	89		INT		EXAMINATION METHOD			FIRST INTERVAL			SECOND INTERVAL			THIRD INTERVAL			FOURTH INTERVAL			
ITEM NUMBER	CATEGORY NUMBER	DESCRIPTION	SKETCH NUMBER	IDENT. NUMBER	VOL.	SUR	VIS.	1ST	2ND	3RD	1ST	2ND	3RD	1ST	2ND	3RD	1ST	2ND	3RD	REMARKS
								PERIOD			PERIOD			PERIOD			PERIOD			
C1.30	C-A		2-1101	31-2	X										/					REFERENCE TABLE 4.0
C1.30	C-A		2-1101	32-2	X															
C1.30	C-A		2-1101	33-2	X															
C1.30	C-A		2-1101	34-2	X															
C1.30	C-A		2-1110	2	X															
C1.30	C-A		2-1110	3	X															
C1.30	C-A		2-1110	6	X															
C1.30	C-A		2-1110	7	X															
C1.30	C-A		2-1110	10	X											/				
C1.30	C-A		2-1110	11	X											/				
TOTAL ID'S FOR C1.30				10	10	0	0	TOTAL SCHEDULED						0	1	2				
								TOTAL COMPLETED						0	0	0				

NSBU COMPONENT SURVEILLANCE SCHEDULE
Westinghouse Proprietary

COMPONENT: NOZ. TO SHELL (OR HEAD) WELDS > 1/2" NOM. THK.

89	89		INT		EXAMINATION METHOD			FIRST INTERVAL			SECOND INTERVAL			THIRD INTERVAL			FOURTH INTERVAL			
ITEM NUMBER	CATEGORY NUMBER	DESCRIPTION	SKETCH NUMBER	IDENT. NUMBER	VOL.	SUR	VIS.	1ST	2ND	3RD	1ST	2ND	3RD	1ST	2ND	3RD	1ST	2ND	3RD	REMARKS
								PERIOD			PERIOD			PERIOD			PERIOD			
C2.21	C-B		2-1101	31-9	X										/					REFERENCE TABLE 4.0
				31-9		X									/					
C2.21	C-B		2-1101	32-9	X															
				32-9		X														
C2.21	C-B		2-1101	33-9	X															
				33-9		X														
C2.21	C-B		2-1101	34-9	X															
				34-9		X														
C2.21	C-B		2-1101	31-10	X											/				
				31-10		X										/				
C2.21	C-B		2-1101	32-10	X															
				32-10		X														
C2.21	C-B		2-1101	33-10	X															
				33-10		X														
C2.21	C-B		2-1101	34-10	X															
				34-10		X														
TOTAL ID'S FOR C2.21				8	8	8	0	TOTAL SCHEDULED						0	2	2				
								TOTAL COMPLETED						0	0	0				

NSBU COMPONENT SURVEILLANCE SCHEDULE
Westinghouse Proprietary

COMPONENT: NOZZLE INSIDE RADIUS SECTION

89	89		INT		EXAMINATION METHOD			FIRST INTERVAL			SECOND INTERVAL			THIRD INTERVAL			FOURTH INTERVAL			
ITEM NUMBER	CATEGORY NUMBER	DESCRIPTION	SKETCH NUMBER	IDENT. NUMBER	VOL.	SUR	VIS.	1ST	2ND	3RD	1ST	2ND	3RD	1ST	2ND	3RD	1ST	2ND	3RD	REMARKS
								PERIOD			PERIOD			PERIOD			PERIOD			
C2.22	C-B		2-1101	31-9IR	X										/					REFERENCE TABLE 4.0
C2.22	C-B		2-1101	32-9IR	X															
C2.22	C-B		2-1101	33-9IR	X															
C2.22	C-B		2-1101	34-9IR	X															
TOTAL ID'S FOR C2.22				4	4	0	0	TOTAL SCHEDULED						0	1	0				
								TOTAL COMPLETED						0	0	0				

NSBU COMPONENT SURVEILLANCE SCHEDULE

Westinghouse Proprietary

COMPONENT: REINFORCING PLATE WELDS TO NOZZLE AND VESSEL

89	89		INT		EXAMINATION METHOD			FIRST INTERVAL			SECOND INTERVAL			THIRD INTERVAL			FOURTH INTERVAL			
ITEM NUMBER	CATEGORY NUMBER	DESCRIPTION	SKETCH NUMBER	IDENT. NUMBER	VOL.	SUR	VIS.	1ST	2ND	3RD	1ST	2ND	3RD	1ST	2ND	3RD	1ST	2ND	3RD	REMARKS
								PERIOD			PERIOD			PERIOD			PERIOD			
C2.31	C-B		2-1120	31-3		X								/						REFERENCE TABLE 4.0
C2.31	C-B		2-1120	31-4		X								/						
C2.31	C-B		2-1120	32-3		X														
C2.31	C-B		2-1120	32-4		X														
C2.31	C-B		2-1220	5		X								/						
C2.31	C-B		2-1220	6		X								/						
TOTAL ID'S FOR C2.31				6	0	6	0	TOTAL SCHEDULED						4	0	0				
								TOTAL COMPLETED						0	0	0				

NSBU COMPONENT SURVEILLANCE SCHEDULE
Westinghouse Proprietary

COMPONENT: Nozzle-to-Shell (or Head) Welds When Inside of Vessel Is Inaccessible

89	89		INT		EXAMINATION METHOD			FIRST INTERVAL			SECOND INTERVAL			THIRD INTERVAL			FOURTH INTERVAL			
ITEM NUMBER	CATEGORY NUMBER	DESCRIPTION	SKETCH NUMBER	IDENT. NUMBER	VOL.	SUR	VIS.	1ST	2ND	3RD	1ST	2ND	3RD	1ST	2ND	3RD	1ST	2ND	3RD	REMARKS
								PERIOD			PERIOD			PERIOD			PERIOD			
C2.33	C-B		2-1120	31-5			X							/	/	/				VT-2. REF TABLE 4.0
C2.33	C-B		2-1120	31-6			X							/	/	/				Telltale Hole for Leakage
C2.33	C-B		2-1120	32-5			X													
C2.33	C-B		2-1120	32-6			X													
TOTAL ID'S FOR C2.33				4	0	0	4	TOTAL SCHEDULED						2	2	2				
								TOTAL COMPLETED						0	0	0				

NSBU COMPONENT SURVEILLANCE SCHEDULE
Westinghouse Proprietary

COMPONENT: VESSELS INTEGRALLY WELDED ATTACHMENTS

89	89		INT		EXAMINATION METHOD			FIRST INTERVAL			SECOND INTERVAL			THIRD INTERVAL			FOURTH INTERVAL			
ITEM NUMBER	CATEGORY NUMBER	DESCRIPTION	SKETCH NUMBER	IDENT. NUMBER	VOL.	SUR	VIS.	1ST	2ND	3RD	1ST	2ND	3RD	1ST	2ND	3RD	1ST	2ND	3RD	REMARKS
								PERIOD			PERIOD			PERIOD			PERIOD			
C3.10	C-C		2-1120	31-1WS		X								/						REFERENCE TABLE 4.0
C3.10	C-C		2-1120	31-2WS		X								/						REFERENCE TABLE 4.0
C3.10	C-C		2-1120	32-1WS		X														
C3.10	C-C		2-1120	32-2WS		X														
TOTAL ID'S FOR C3.10				4	0	4	0	TOTAL SCHEDULED						2	0	0				
								TOTAL COMPLETED						0	0	0				

NSBU COMPONENT SURVEILLANCE SCHEDULE
Westinghouse Proprietary

COMPONENT: PIPING INTEGRALLY WELDED ATTACHMENTS

89	89		INT		EXAMINATION METHOD			FIRST INTERVAL			SECOND INTERVAL			THIRD INTERVAL			FOURTH INTERVAL			
ITEM NUMBER	CATEGORY NUMBER	DESCRIPTION	SKETCH NUMBER	IDENT. NUMBER	VOL.	SUR	VIS.	1ST	2ND	3RD	1ST	2ND	3RD	1ST	2ND	3RD	1ST	2ND	3RD	REMARKS
								PERIOD			PERIOD			PERIOD			PERIOD			
C3.20	C-C		2-2100	HMS-1		X														REFERENCE TABLE 4.0 CODE CASE N-509 APPLIES
C3.20	C-C		2-2101	MS-A-1020-1		X														
C3.20	C-C		2-2101	MS-H-362		X									/					
C3.20	C-C		2-2102	HBF-1		X									/					
C3.20	C-C		2-2200	HMS-2		X														
C3.20	C-C		2-2200	HMS-17		X														
C3.20	C-C		2-2200	MS-R-200		X														
C3.20	C-C		2-2201	MS-A-1018-1		X														
C3.20	C-C		2-2202	HBF-2		X														
C3.20	C-C		2-2300	HMS-3		X								/						
C3.20	C-C		2-2300	HMS-18		X														
C3.20	C-C		2-2301	MS-H-372		X														
C3.20	C-C		2-2301	MS-A-1022		X														
C3.20	C-C		2-2302	HBF-3		X														
C3.20	C-C		2-2302	BFD-H-43		X														
C3.20	C-C		2-2400	HMS-4		X														
C3.20	C-C		2-2401	MS-A-1024-1		X														
C3.20	C-C		2-2402	HBF-4		X														
C3.20	C-C		2-2500	AC-H-10-14		X														
C3.20	C-C		2-2500	AC-H-10-15		X														
C3.20	C-C		2-2500	AC-H-10-17		X														
C3.20	C-C		2-2500	AC-H-10-18C		X								/						
C3.20	C-C		2-2500	AC-H-10-201		X														
C3.20	C-C		2-2500	AC-H-10-207		X														
C3.20	C-C		2-2500	AC-H-10-653-1A		X														
C3.20	C-C		2-2500	MS-10-15-AC-H-57		X														
C3.20	C-C		2-2510	AC-A-9-7		X														

NSBU COMPONENT SURVEILLANCE SCHEDULE

COMPONENT: PIPING INTEGRALLY WELDED ATTACHMENTS

89	89		INT		EXAMINATION METHOD			FIRST INTERVAL			SECOND INTERVAL			THIRD INTERVAL			FOURTH INTERVAL			
ITEM NUMBER	CATEGORY NUMBER	DESCRIPTION	SKETCH NUMBER	IDENT. NUMBER	VOL.	SUR	VIS.	1ST	2ND	3RD	1ST	2ND	3RD	1ST	2ND	3RD	1ST	2ND	3RD	REMARKS
								PERIOD			PERIOD			PERIOD			PERIOD			
C3.20	C-C		2-2510	AC-H-83		X														
C3.20	C-C		2-2510	AC-H-84		X														
C3.20	C-C		2-2510	AC-H-86		X														
C3.20	C-C		2-2510	AC-H--9-6		X														
C3.20	C-C		2-2510	AC-H-9-7		X														
C3.20	C-C		2-2511	AC-H-9-3		X														
C3.20	C-C		2-2511	AC-H-9-12		X														
C3.20	C-C		2-2511	AC-H-220		X														
C3.20	C-C		2-2511	AC-H-222		X														
C3.20	C-C		2-2512	AC-H-9-1		X														
C3.20	C-C		2-2512	AC-H-210		X														
C3.20	C-C		2-2512	AC-H-212		X														
C3.20	C-C		2-2512	AC-H-212		X														
C3.20	C-C		2-2512	AC-H-214		X														
C3.20	C-C		2-2512	AC-H-215		X														
C3.20	C-C		2-2532	SI-H&R-214		X														
C3.20	C-C		2-2540	MS-60-4-SI-H-56		X														
C3.20	C-C		2-2540	MS-60-6-SI-H-56		X														
C3.20	C-C		2-2540	SI-H-56-4		X														
C3.20	C-C		2-2541	SI-A-356-F		X														
C3.20	C-C		2-2541	SI-H-177		X														
C3.20	C-C		2-2541	SI-H&R-174		X														
C3.20	C-C		2-2542	MS-214-SI-H&R-361		X														

NSBU COMPONENT SURVEILLANCE SCHEDULE
Westinghouse Proprietary

COMPONENT: PIPING INTEGRALLY WELDED ATTACHMENTS

89	89		INT		EXAMINATION METHOD			FIRST INTERVAL			SECOND INTERVAL			THIRD INTERVAL			FOURTH INTERVAL			
ITEM NUMBER	CATEGORY NUMBER	DESCRIPTION	SKETCH NUMBER	IDENT. NUMBER	VOL.	SUR	VIS.	1ST	2ND	3RD	1ST	2ND	3RD	1ST	2ND	3RD	1ST	2ND	3RD	REMARKS
								PERIOD			PERIOD			PERIOD			PERIOD			
C3.20	C-C		2-2542	SI-A-361-7		X														
C3.20	C-C		2-2542	SI-H-195		X														
C3.20	C-C		2-2542	SI-H-196		X														
C3.20	C-C		2-2542	SI-H-361-5		X														
C3.20	C-C		2-2542	SI-H&R--361-1A		X														
C3.20	C-C		2-2543	SI-HR550-4		X										/				
C3.20	C-C		2-2543	SI-HR550-7		X										/				
TOTAL ID'S FOR C3.20				57	0	57	0	TOTAL SCHEDULED						2	2	2				
								TOTAL COMPLETED						0	0	0				

NSBU COMPONENT SURVEILLANCE SCHEDULE
Westinghouse Proprietary

COMPONENT: Circumferential Piping Welds > 3/8 in. Nominal Wall Thickness for Piping > NPS 4

89	89		INT		EXAMINATION METHOD			FIRST INTERVAL			SECOND INTERVAL			THIRD INTERVAL			FOURTH INTERVAL			
ITEM NUMBER	CATEGORY NUMBER	DESCRIPTION	SKETCH NUMBER	IDENT. NUMBER	VOL.	SUR	VIS.	1ST	2ND	3RD	1ST	2ND	3RD	1ST	2ND	3RD	1ST	2ND	3RD	REMARKS
								PERIOD			PERIOD			PERIOD			PERIOD			
C5.11	C-F-1		2-2500	1	X															
						X														
C5.11	C-F-1		2-2500	2	X															
						X														
C5.11	C-F-1		2-2500	3	X															
						X														
C5.11	C-F-1		2-2500	4	X															
						X														
C5.11	C-F-1		2-2500	5	X															
						X														
C5.11	C-F-1		2-2500	6	X															
						X														
C5.11	C-F-1		2-2500	7	X															
						X														
C5.11	C-F-1		2-2500	8	X															
						X														
C5.11	C-F-1		2-2500	9	X															
						X														
C5.11	C-F-1		2-2500	10	X															
						X														
C5.11	C-F-1		2-2500	11	X															
						X														
C5.11	C-F-1		2-2500	12	X															
						X														
C5.11	C-F-1		2-2500	13	X															
						X														
C5.11	C-F-1		2-2500	14	X															
						X														
C5.11	C-F-1		2-2500	15	X															
						X														
C5.11	C-F-1		2-2500	16	X															
						X														
C5.11	C-F-1		2-2500	17	X															
						X														
C5.11	C-F-1		2-2500	18	X															
						X														
C5.11	C-F-1		2-2500	19	X									/						
						X								/						

NSBU COMPONENT SURVEILLANCE SCHEDULE

Westinghouse Proprietary

COMPONENT: Circumferential Piping Welds ≥ 3/8 in. Nominal Wall Thickness for Piping > NPS 4

89	89		INT		EXAMINATION METHOD			FIRST INTERVAL			SECOND INTERVAL			THIRD INTERVAL			FOURTH INTERVAL			
ITEM NUMBER	CATEGORY NUMBER	DESCRIPTION	SKETCH NUMBER	IDENT. NUMBER	VOL.	SUR	VIS.	1ST	2ND	3RD	1ST	2ND	3RD	1ST	2ND	3RD	1ST	2ND	3RD	REMARKS
								PERIOD			PERIOD			PERIOD			PERIOD			
C5.11	C-F-1		2-2500	20	X									/						
						X								/						
C5.11	C-F-1		2-2500	21	X															
						X														
C5.11	C-F-1		2-2500	22	X															
						X														
C5.11	C-F-1		2-2500	23	X															
						X														
C5.11	C-F-1		2-2500	24	X															
						X														
C5.11	C-F-1		2-2500	25	X															
						X														
C5.11	C-F-1		2-2500	26	X									/						
						X								/						
C5.11	C-F-1		2-2500	27	X									/						
						X								/						
C5.11	C-F-1		2-2500	28	X									/						
						X								/						
C5.11	C-F-1		2-2500	29	X															
						X														
C5.11	C-F-1		2-2500	30	X															
						X														
C5.11	C-F-1		2-2500	31	X															
						X														
C5.11	C-F-1		2-2500	32	X															
						X														
C5.11	C-F-1		2-2500	33	X									/						
						X								/						
C5.11	C-F-1		2-2500	34	X									/						
						X								/						
C5.11	C-F-1		2-2500	35	X															
						X														
C5.11	C-F-1		2-2500	36	X															
						X														
C5.11	C-F-1		2-2500	37	X															
						X														
C5.11	C-F-1		2-2500	38	X															
						X														
C5.11	C-F-1		2-2500	39	X															
						X														

NSBU COMPONENT SURVEILLANCE SCHEDULE

Westinghouse Proprietary

COMPONENT: Circumferential Piping Welds > 3/8 in. Nominal Wall Thickness for Piping > NPS 4

89	89		INT		EXAMINATION METHOD			FIRST INTERVAL			SECOND INTERVAL			THIRD INTERVAL			FOURTH INTERVAL			
ITEM NUMBER	CATEGORY NUMBER	DESCRIPTION	SKETCH NUMBER	IDENT. NUMBER	VOL.	SUR	VIS.	1ST	2ND	3RD	1ST	2ND	3RD	1ST	2ND	3RD	1ST	2ND	3RD	REMARKS
								PERIOD			PERIOD			PERIOD			PERIOD			
C5.11	C-F-1		2-2500	40	X															
						X														
C5.11	C-F-1		2-2500	41	X															
						X														
C5.11	C-F-1		2-2500	42	X															
						X														
C5.11	C-F-1		2-2500	43	X															
						X														
C5.11	C-F-1		2-2500	44	X															
						X														
C5.11	C-F-1		2-2500	45	X															
						X														
C5.11	C-F-1		2-2500	46	X															
						X														
C5.11	C-F-1		2-2500	47	X															
						X														
C5.11	C-F-1		2-2500	48	X															
						X														
C5.11	C-F-1		2-2500	49	X															
						X														
C5.11	C-F-1		2-2500	50	X															
						X														
C5.11	C-F-1		2-2500	51	X															
						X														
C5.11	C-F-1		2-2500	52	X															
						X														
C5.11	C-F-1		2-2500	65	X															
						X														
C5.11	C-F-1		2-2500	66	X															
						X														
C5.11	C-F-1		2-2500	67	X															
						X														
C5.11	C-F-1		2-2500	68	X															
						X														
C5.11	C-F-1		2-2500	74	X															
						X														
C5.11	C-F-1		2-2500	75	X															
						X														
C5.11	C-F-1		2-2500	76	X															
						X														

NSBU COMPONENT SURVEILLANCE SCHEDULE

COMPONENT: Circumferential Piping Welds ≥ 3/8 in. Nominal Wall Thickness for Piping > NPS 4

89	89		INT		EXAMINATION METHOD			FIRST INTERVAL			SECOND INTERVAL			THIRD INTERVAL			FOURTH INTERVAL			
ITEM NUMBER	CATEGORY NUMBER	DESCRIPTION	SKETCH NUMBER	IDENT. NUMBER	VOL.	SUR	VIS.	1ST	2ND	3RD	1ST	2ND	3RD	1ST	2ND	3RD	1ST	2ND	3RD	REMARKS
								PERIOD			PERIOD			PERIOD			PERIOD			
C5.11	C-F-1		2-2500	77	X															
						X														
C5.11	C-F-1		2-2510	1																
C5.11	C-F-1		2-2510	2																
C5.11	C-F-1		2-2510	3																
C5.11	C-F-1		2-2510	4																
C5.11	C-F-1		2-2510	5																
C5.11	C-F-1		2-2510	6																
C5.11	C-F-1		2-2510	7																
C5.11	C-F-1		2-2510	8																
C5.11	C-F-1		2-2510	9																
C5.11	C-F-1		2-2510	10																
C5.11	C-F-1		2-2510	11																
C5.11	C-F-1		2-2510	12	X															
						X														
C5.11	C-F-1		2-2510	13	X															
						X														
C5.11	C-F-1		2-2510	14	X															
						X														
C5.11	C-F-1		2-2510	15	X															
						X														
C5.11	C-F-1		2-2510	16	X															
						X														
C5.11	C-F-1		2-2510	18	X															
						X														
C5.11	C-F-1		2-2510	19	X															
						X														
C5.11	C-F-1		2-2510	20	X															
						X														
C5.11	C-F-1		2-2510	21	X															
						X														
C5.11	C-F-1		2-2510	22	X															
						X														
C5.11	C-F-1		2-2510	23	X															
						X														
C5.11	C-F-1		2-2510	24	X															
						X														
C5.11	C-F-1		2-2510	25	X															
						X														

NSBU COMPONENT SURVEILLANCE SCHEDULE
Westinghouse Proprietary

COMPONENT: Circumferential Piping Welds > 3/8 in. Nominal Wall Thickness for Piping > NPS 4

89	89		INT		EXAMINATION METHOD			FIRST INTERVAL			SECOND INTERVAL			THIRD INTERVAL			FOURTH INTERVAL			
ITEM NUMBER	CATEGORY NUMBER	DESCRIPTION	SKETCH NUMBER	IDENT. NUMBER	VOL.	SUR	VIS.	1ST	2ND	3RD	1ST	2ND	3RD	1ST	2ND	3RD	1ST	2ND	3RD	REMARKS
								PERIOD			PERIOD			PERIOD			PERIOD			
C5.11	C-F-1		2-2510	26	X															
						X														
C5.11	C-F-1		2-2510	27	X															
						X														
C5.11	C-F-1		2-2510	28	X									/						
						X								/						
C5.11	C-F-1		2-2510	29	X									/						
						X								/						
C5.11	C-F-1		2-2510	30	X															
						X														
C5.11	C-F-1		2-2510	31	X									/						
						X								/						
C5.11	C-F-1		2-2510	32	X															
						X														
C5.11	C-F-1		2-2510	33	X															
						X														
C5.11	C-F-1		2-2510	34	X									/						
						X								/						
C5.11	C-F-1		2-2510	35	X									/						
						X								/						
C5.11	C-F-1		2-2510	36	X															
						X														
C5.11	C-F-1		2-2510	37	X															
						X														
C5.11	C-F-1		2-2511	1	X															
						X														
C5.11	C-F-1		2-2511	2	X															
						X														
C5.11	C-F-1		2-2511	3	X															
						X														
C5.11	C-F-1		2-2511	4	X															
						X														
C5.11	C-F-1		2-2511	5	X															
						X														
C5.11	C-F-1		2-2511	6	X										/					
						X									/					
C5.11	C-F-1		2-2511	7	X										/					
						X									/					

NSBU COMPONENT SURVEILLANCE SCHEDULE
Westinghouse Proprietary

COMPONENT: Circumferential Piping Welds > 3/8 in. Nominal Wall Thickness for Piping > NPS 4

89	89		INT		EXAMINATION METHOD			FIRST INTERVAL			SECOND INTERVAL			THIRD INTERVAL			FOURTH INTERVAL			
ITEM NUMBER	CATEGORY NUMBER	DESCRIPTION	SKETCH NUMBER	IDENT. NUMBER	VOL.	SUR	VIS.	1ST	2ND	3RD	1ST	2ND	3RD	1ST	2ND	3RD	1ST	2ND	3RD	REMARKS
								PERIOD			PERIOD			PERIOD			PERIOD			
C5.11	C-F-1		2-2511	8	X										/					
						X									/					
C5.11	C-F-1		2-2511	9	X										/					
						X									/					
C5.11	C-F-1		2-2511	10	X															
						X														
C5.11	C-F-1		2-2511	11	X															
						X														
C5.11	C-F-1		2-2511	12	X															
						X														
C5.11	C-F-1		2-2511	13	X															
						X														
C5.11	C-F-1		2-2511	14	X															
						X														
C5.11	C-F-1		2-2511	15	X															
						X														
C5.11	C-F-1		2-2511	16	X															
						X														
C5.11	C-F-1		2-2511	17	X															
						X														
C5.11	C-F-1		2-2511	18	X															
						X														
C5.11	C-F-1		2-2511	19	X															
						X														
C5.11	C-F-1		2-2511	20	X															
						X														
C5.11	C-F-1		2-2511	21	X															
						X														
C5.11	C-F-1		2-2511	22	X															
						X														
C5.11	C-F-1		2-2511	23	X															
						X														
C5.11	C-F-1		2-2511	24	X															
						X														
C5.11	C-F-1		2-2511	25	X															
						X														
C5.11	C-F-1		2-2511	26	X															
						X														
C5.11	C-F-1		2-2511	27	X															
						X														

NSBU COMPONENT SURVEILLANCE SCHEDULE
Westinghouse Proprietary

COMPONENT: Circumferential Piping Welds > 3/8 in. Nominal Wall Thickness for Piping > NPS 4

89	89		INT		EXAMINATION METHOD			FIRST INTERVAL			SECOND INTERVAL			THIRD INTERVAL			FOURTH INTERVAL			
ITEM NUMBER	CATEGORY NUMBER	DESCRIPTION	SKETCH NUMBER	IDENT. NUMBER	VOL.	SUR	VIS.	1ST	2ND	3RD	1ST	2ND	3RD	1ST	2ND	3RD	1ST	2ND	3RD	REMARKS
								PERIOD			PERIOD			PERIOD			PERIOD			
C5.11	C-F-1		2-2511	28	X															
						X														
C5.11	C-F-1		2-2511	29	X															
						X														
C5.11	C-F-1		2-2511	30	X															
						X														
C5.11	C-F-1		2-2511	31	X															
						X														
C5.11	C-F-1		2-2511	32	X															
						X														
C5.11	C-F-1		2-2511	33																
C5.11	C-F-1		2-2512	1																
C5.11	C-F-1		2-2512	2																
C5.11	C-F-1		2-2512	3																
C5.11	C-F-1		2-2512	4																
C5.11	C-F-1		2-2512	5																
C5.11	C-F-1		2-2512	6																
C5.11	C-F-1		2-2512	7																
C5.11	C-F-1		2-2512	8																
C5.11	C-F-1		2-2512	9																
C5.11	C-F-1		2-2512	10																
C5.11	C-F-1		2-2512	11																
C5.11	C-F-1		2-2512	12																
C5.11	C-F-1		2-2512	13																
C5.11	C-F-1		2-2512	14																
C5.11	C-F-1		2-2512	15																
C5.11	C-F-1		2-2512	16																
C5.11	C-F-1		2-2512	17																
C5.11	C-F-1		2-2512	18																
C5.11	C-F-1		2-2512	19																
C5.11	C-F-1		2-2512	20																
C5.11	C-F-1		2-2512	21																
C5.11	C-F-1		2-2512	22																
C5.11	C-F-1		2-2512	23																
C5.11	C-F-1		2-2512	24																
C5.11	C-F-1		2-2512	25																
C5.11	C-F-1		2-2512	26																
C5.11	C-F-1		2-2512	27																
C5.11	C-F-1		2-2512	28																

NSBU COMPONENT SURVEILLANCE SCHEDULE
Westinghouse Proprietary

COMPONENT: Circumferential Piping Welds > 3/8 in. Nominal Wall Thickness for Piping > NPS 4

89	89		INT		EXAMINATION METHOD			FIRST INTERVAL			SECOND INTERVAL			THIRD INTERVAL			FOURTH INTERVAL			
ITEM NUMBER	CATEGORY NUMBER	DESCRIPTION	SKETCH NUMBER	IDENT. NUMBER	VOL.	SUR	VIS.	1ST	2ND	3RD	1ST	2ND	3RD	1ST	2ND	3RD	1ST	2ND	3RD	REMARKS
								PERIOD			PERIOD			PERIOD			PERIOD			
C5.11	C-F-1		2-2512	29																
C5.11	C-F-1		2-2512	30	X															
						X														
C5.11	C-F-1		2-2512	31	X															
						X														
C5.11	C-F-1		2-2512	32	X															
						X														
C5.11	C-F-1		2-2512	33	X															
						X														
C5.11	C-F-1		2-2512	34	X															
						X														
C5.11	C-F-1		2-2512	35	X															
						X														
C5.11	C-F-1		2-2520	1																
C5.11	C-F-1		2-2520	2																
C5.11	C-F-1		2-2520	3																
C5.11	C-F-1		2-2520	4																
C5.11	C-F-1		2-2520	5																
C5.11	C-F-1		2-2520	6																
C5.11	C-F-1		2-2520	7																
C5.11	C-F-1		2-2520	8																
C5.11	C-F-1		2-2520	9																
C5.11	C-F-1		2-2520	10																
C5.11	C-F-1		2-2520	11																
C5.11	C-F-1		2-2520	12																
C5.11	C-F-1		2-2520	13																
C5.11	C-F-1		2-2520	14																
C5.11	C-F-1		2-2520	15	X															
						X														
C5.11	C-F-1		2-2520	16	X															
						X														
C5.11	C-F-1		2-2520	17	X															
						X														
C5.11	C-F-1		2-2520	18	X										/					
						X									/					
C5.11	C-F-1		2-2520	19	X															
						X														
C5.11	C-F-1		2-2520	20	X															
						X														

NSBU COMPONENT SURVEILLANCE SCHEDULE

Westinghouse Proprietary

COMPONENT: Circumferential Piping Welds > 3/8 in. Nominal Wall Thickness for Piping > NPS 4

89	89		INT		EXAMINATION METHOD			FIRST INTERVAL			SECOND INTERVAL			THIRD INTERVAL			FOURTH INTERVAL			
ITEM NUMBER	CATEGORY NUMBER	DESCRIPTION	SKETCH NUMBER	IDENT. NUMBER	VOL.	SUR	VIS.	1ST	2ND	3RD	1ST	2ND	3RD	1ST	2ND	3RD	1ST	2ND	3RD	REMARKS
								PERIOD			PERIOD			PERIOD			PERIOD			
C5.11	C-F-1		2-2520	21	X															
						X														
C5.11	C-F-1		2-2520	22	X															
						X														
C5.11	C-F-1		2-2520	23	X															
						X														
C5.11	C-F-1		2-2520	24	X															
						X														
C5.11	C-F-1		2-2520	25	X															
						X														
C5.11	C-F-1		2-2520	26	X															
						X														
C5.11	C-F-1		2-2520	27	X															
						X														
C5.11	C-F-1		2-2530	1																
C5.11	C-F-1		2-2530	2																
C5.11	C-F-1		2-2530	3																
C5.11	C-F-1		2-2530	4																
C5.11	C-F-1		2-2530	5																
C5.11	C-F-1		2-2530	6																
C5.11	C-F-1		2-2530	7																
C5.11	C-F-1		2-2530	8																
C5.11	C-F-1		2-2530	9																
C5.11	C-F-1		2-2530	10																
C5.11	C-F-1		2-2530	11																
C5.11	C-F-1		2-2530	12																
C5.11	C-F-1		2-2530	13																
C5.11	C-F-1		2-2530	14																
C5.11	C-F-1		2-2530	15																
C5.11	C-F-1		2-2530	16																
C5.11	C-F-1		2-2530	17																
C5.11	C-F-1		2-2530	18																
C5.11	C-F-1		2-2530	19																
C5.11	C-F-1		2-2530	20																
C5.11	C-F-1		2-2530	21																
C5.11	C-F-1		2-2530	22																
C5.11	C-F-1		2-2530	23																
C5.11	C-F-1		2-2530	24																
C5.11	C-F-1		2-2530	25																

NSBU COMPONENT SURVEILLANCE SCHEDULE

Westinghouse Proprietary

COMPONENT: Circumferential Piping Welds ≥ 3/8 in. Nominal Wall Thickness for Piping > NPS 4

89	89		INT		EXAMINATION METHOD			FIRST INTERVAL			SECOND INTERVAL			THIRD INTERVAL			FOURTH INTERVAL			
ITEM NUMBER	CATEGORY NUMBER	DESCRIPTION	SKETCH NUMBER	IDENT. NUMBER	VOL.	SUR	VIS.	1ST	2ND	3RD	1ST	2ND	3RD	1ST	2ND	3RD	1ST	2ND	3RD	REMARKS
								PERIOD			PERIOD			PERIOD			PERIOD			
C5.11	C-F-1		2-2530	26																
C5.11	C-F-1		2-2530	27																
C5.11	C-F-1		2-2530	28																
C5.11	C-F-1		2-2530	29																
C5.11	C-F-1		2-2530	30																
C5.11	C-F-1		2-2530	31																
C5.11	C-F-1		2-2530	32																
C5.11	C-F-1		2-2530	33																
C5.11	C-F-1		2-2530	34																
C5.11	C-F-1		2-2530	35																
C5.11	C-F-1		2-2530	36																
C5.11	C-F-1		2-2530	37																
C5.11	C-F-1		2-2530	38																
C5.11	C-F-1		2-2530	39																
C5.11	C-F-1		2-2530	40																
C5.11	C-F-1		2-2530	41																
C5.11	C-F-1		2-2530	42																
C5.11	C-F-1		2-2530	43																
C5.11	C-F-1		2-2530	44																
C5.11	C-F-1		2-2530	45																
C5.11	C-F-1		2-2530	46																
C5.11	C-F-1		2-2530	47																
C5.11	C-F-1		2-2530	48																
C5.11	C-F-1		2-2530	49																
C5.11	C-F-1		2-2530	50																
C5.11	C-F-1		2-2530	51																
C5.11	C-F-1		2-2530	52																
C5.11	C-F-1		2-2530	53																
C5.11	C-F-1		2-2530	54																
C5.11	C-F-1		2-2530	55																
C5.11	C-F-1		2-2530	56																
C5.11	C-F-1		2-2530	57																
C5.11	C-F-1		2-2530	58																
C5.11	C-F-1		2-2530	59																
C5.11	C-F-1		2-2531	1	X															
						X														
C5.11	C-F-1		2-2531	2	X															
						X														

NSBU COMPONENT SURVEILLANCE SCHEDULE
Westinghouse Proprietary

COMPONENT: Circumferential Piping Welds > 3/8 in. Nominal Wall Thickness for Piping > NPS 4

89	89		INT		EXAMINATION METHOD			FIRST INTERVAL			SECOND INTERVAL			THIRD INTERVAL			FOURTH INTERVAL			
ITEM NUMBER	CATEGORY NUMBER	DESCRIPTION	SKETCH NUMBER	IDENT. NUMBER	VOL.	SUR	VIS.	1ST	2ND	3RD	1ST	2ND	3RD	1ST	2ND	3RD	1ST	2ND	3RD	REMARKS
								PERIOD			PERIOD			PERIOD			PERIOD			
C5.11	C-F-1		2-2531	3	X															
						X														
C5.11	C-F-1		2-2531	4	X															
						X														
C5.11	C-F-1		2-2531	5	X															
						X														
C5.11	C-F-1		2-2531	6	X															
						X														
C5.11	C-F-1		2-2531	7	X															
						X														
C5.11	C-F-1		2-2531	8	X											/				
						X										/				
C5.11	C-F-1		2-2531	9	X											/				
						X										/				
C5.11	C-F-1		2-2531	10	X															
						X														
C5.11	C-F-1		2-2531	11	X															
						X														
C5.11	C-F-1		2-2531	12	X															
						X														
C5.11	C-F-1		2-2531	13	X															
						X														
C5.11	C-F-1		2-2531	14	X															
						X														
C5.11	C-F-1		2-2531	15	X															
						X														
C5.11	C-F-1		2-2531	16	X															
						X														
C5.11	C-F-1		2-2531	17	X															
						X														
C5.11	C-F-1		2-2531	18	X															
						X														
C5.11	C-F-1		2-2531	19	X															
						X														
C5.11	C-F-1		2-2531	20	X											/				
						X										/				
C5.11	C-F-1		2-2531	21	X											/				
						X										/				
C5.11	C-F-1		2-2531	22	X															
						X														

NSBU COMPONENT SURVEILLANCE SCHEDULE

COMPONENT: Circumferential Piping Welds ≥ 3/8 in. Nominal Wall Thickness for Piping > NPS 4

89	89		INT		EXAMINATION METHOD			FIRST INTERVAL			SECOND INTERVAL			THIRD INTERVAL			FOURTH INTERVAL			
ITEM NUMBER	CATEGORY NUMBER	DESCRIPTION	SKETCH NUMBER	IDENT. NUMBER	VOL.	SUR	VIS.	1ST	2ND	3RD	1ST	2ND	3RD	1ST	2ND	3RD	1ST	2ND	3RD	REMARKS
								PERIOD			PERIOD			PERIOD			PERIOD			
C5.11	C-F-1		2-2531	23																
C5.11	C-F-1		2-2531	24																
C5.11	C-F-1		2-2531	25																
C5.11	C-F-1		2-2531	26																
C5.11	C-F-1		2-2531	27																
C5.11	C-F-1		2-2532	1	X															
				1		X														
C5.11	C-F-1		2-2532	2	X															
				2		X														
C5.11	C-F-1		2-2532	3	X															
				3		X														
C5.11	C-F-1		2-2532	4	X															
				4		X														
C5.11	C-F-1		2-2532	5	X															
				5		X														
C5.11	C-F-1		2-2532	6	X															
				6		X														
C5.11	C-F-1		2-2532	7	X															
				7		X														
C5.11	C-F-1		2-2532	8	X										/					
				8		X									/					
C5.11	C-F-1		2-2532	9	X										/					
				9		X									/					
C5.11	C-F-1		2-2532	10	X										/					
				10		X									/					
C5.11	C-F-1		2-2532	11	X										/					
				11		X									/					
C5.11	C-F-1		2-2532	12	X															
				12		X														
C5.11	C-F-1		2-2532	13	X															
				13		X														
C5.11	C-F-1		2-2532	14	X															
				14		X														
C5.11	C-F-1		2-2532	15	X															
				15		X														
C5.11	C-F-1		2-2532	16	X															
				16		X														
C5.11	C-F-1		2-2532	17	X															
				17		X														

NSBU COMPONENT SURVEILLANCE SCHEDULE

Westinghouse Proprietary

COMPONENT: Circumferential Piping Welds ≥ 3/8 in. Nominal Wall Thickness for Piping > NPS 4

89	89		INT		EXAMINATION METHOD			FIRST INTERVAL			SECOND INTERVAL			THIRD INTERVAL			FOURTH INTERVAL			
ITEM NUMBER	CATEGORY NUMBER	DESCRIPTION	SKETCH NUMBER	IDENT. NUMBER	VOL.	SUR	VIS.	1ST	2ND	3RD	1ST	2ND	3RD	1ST	2ND	3RD	1ST	2ND	3RD	REMARKS
								PERIOD			PERIOD			PERIOD			PERIOD			
C5.11	C-F-1		2-2532	18																
C5.11	C-F-1		2-2532	20																
C5.11	C-F-1		2-2532	21																
C5.11	C-F-1		2-2532	22																
C5.11	C-F-1		2-2532	23																
C5.11	C-F-1		2-2532	24																
C5.11	C-F-1		2-2532	25																
C5.11	C-F-1		2-2533	1	X															
				1		X														
C5.11	C-F-1		2-2533	2	X															
				2		X														
C5.11	C-F-1		2-2533	3	X															
				3		X														
C5.11	C-F-1		2-2533	4	X															
				4		X														
C5.11	C-F-1		2-2533	5	X															
				5		X														
C5.11	C-F-1		2-2533	6	X															
				6		X														
C5.11	C-F-1		2-2533	7	X															
				7		X														
C5.11	C-F-1		2-2533	8	X															
				8		X														
C5.11	C-F-1		2-2533	9	X															
				9		X														
C5.11	C-F-1		2-2533	10	X															
				10		X														
C5.11	C-F-1		2-2540	1	X															
						X														
C5.11	C-F-1		2-2540	2	X															
						X														
C5.11	C-F-1		2-2540	3	X															
						X														
C5.11	C-F-1		2-2540	4	X															
						X														
C5.11	C-F-1		2-2540	5	X															
						X														

NSBU COMPONENT SURVEILLANCE SCHEDULE

COMPONENT: Circumferential Piping Welds ≥ 3/8 in. Nominal Wall Thickness for Piping > NPS 4

89	89		INT		EXAMINATION METHOD			FIRST INTERVAL			SECOND INTERVAL			THIRD INTERVAL			FOURTH INTERVAL			
ITEM NUMBER	CATEGORY NUMBER	DESCRIPTION	SKETCH NUMBER	IDENT. NUMBER	VOL.	SUR	VIS.	1ST	2ND	3RD	1ST	2ND	3RD	1ST	2ND	3RD	1ST	2ND	3RD	REMARKS
								PERIOD			PERIOD			PERIOD			PERIOD			
C5.11	C-F-1		2-2540	6	X															
						X														
C5.11	C-F-1		2-2540	7	X															
						X														
C5.11	C-F-1		2-2540	8	X															
						X														
C5.11	C-F-1		2-2540	9	X															
						X														
C5.11	C-F-1		2-2540	10	X															
						X														
C5.11	C-F-1		2-2540	11	X															
						X														
C5.11	C-F-1		2-2540	12	X															
						X														
C5.11	C-F-1		2-2540	13	X															
						X														
C5.11	C-F-1		2-2540	14	X															
						X														
C5.11	C-F-1		2-2540	15	X															
						X														
C5.11	C-F-1		2-2540	16	X															
						X														
C5.11	C-F-1		2-2540	17	X															
						X														
C5.11	C-F-1		2-2540	18	X															
						X														
C5.11	C-F-1		2-2540	19	X															
						X														
C5.11	C-F-1		2-2540	20	X															
						X														
C5.11	C-F-1		2-2540	21	X															
						X														
C5.11	C-F-1		2-2540	22	X															
						X														
C5.11	C-F-1		2-2540	23	X															
						X														
C5.11	C-F-1		2-2540	24	X															
						X														
C5.11	C-F-1		2-2540	25	X															
						X														

NSBU COMPONENT SURVEILLANCE SCHEDULE

Westinghouse Proprietary

COMPONENT: Circumferential Piping Welds > 3/8 in. Nominal Wall Thickness for Piping > NPS 4

89	89		INT		EXAMINATION METHOD			FIRST INTERVAL			SECOND INTERVAL			THIRD INTERVAL			FOURTH INTERVAL			
ITEM NUMBER	CATEGORY NUMBER	DESCRIPTION	SKETCH NUMBER	IDENT. NUMBER	VOL.	SUR	VTS.	1ST	2ND	3RD	1ST	2ND	3RD	1ST	2ND	3RD	1ST	2ND	3RD	REMARKS
								PERIOD			PERIOD			PERIOD			PERIOD			
C5.11	C-F-1		2-2540	26	X															
						X														
C5.11	C-F-1		2-2540	27	X															
						X														
C5.11	C-F-1		2-2540	28	X															
						X														
C5.11	C-F-1		2-2540	29	X															
						X														
C5.11	C-F-1		2-2540	30	X											/				
						X										/				
C5.11	C-F-1		2-2540	31	X											/				
						X										/				
C5.11	C-F-1		2-2540	32	X															
						X														
C5.11	C-F-1		2-2540	33	X															
						X														
C5.11	C-F-1		2-2540	34	X											/				
						X										/				
C5.11	C-F-1		2-2540	35	X															
						X														
C5.11	C-F-1		2-2541	1	X															
						X														
C5.11	C-F-1		2-2541	2	X															
						X														
C5.11	C-F-1		2-2541	3	X															
						X														
C5.11	C-F-1		2-2541	4	X															
						X														
C5.11	C-F-1		2-2541	5	X															
						X														
C5.11	C-F-1		2-2541	6	X															
						X														
C5.11	C-F-1		2-2541	7	X															
						X														
C5.11	C-F-1		2-2541	8	X															
						X														
C5.11	C-F-1		2-2541	9	X															
						X														

NSBU COMPONENT SURVEILLANCE SCHEDULE

COMPONENT: Circumferential Piping Welds ≥ 3/8 in. Nominal Wall Thickness for Piping > NPS 4

89	89		INT		EXAMINATION METHOD			FIRST INTERVAL			SECOND INTERVAL			THIRD INTERVAL			FOURTH INTERVAL			
ITEM NUMBER	CATEGORY NUMBER	DESCRIPTION	SKETCH NUMBER	IDENT. NUMBER	VOL.	SUR	VIS.	1ST	2ND	3RD	1ST	2ND	3RD	1ST	2ND	3RD	1ST	2ND	3RD	REMARKS
								PERIOD			PERIOD			PERIOD			PERIOD			
C5.11	C-F-1		2-2541	10	X															
						X														
C5.11	C-F-1		2-2541	11	X															
						X														
C5.11	C-F-1		2-2541	12	X															
						X														
C5.11	C-F-1		2-2541	13	X															
						X														
C5.11	C-F-1		2-2541	14	X															
						X														
C5.11	C-F-1		2-2541	15	X															
						X														
C5.11	C-F-1		2-2541	16	X											/				
						X										/				
C5.11	C-F-1		2-2541	17	X											/				
						X										/				
C5.11	C-F-1		2-2541	18	X															
						X														
C5.11	C-F-1		2-2541	19	X															
						X														
C5.11	C-F-1		2-2541	20	X															
						X														
C5.11	C-F-1		2-2541	21	X															
						X														
C5.11	C-F-1		2-2541	22	X											/				
						X										/				
C5.11	C-F-1		2-2541	23	X											/				
						X										/				
C5.11	C-F-1		2-2541	24	X															
						X														
C5.11	C-F-1		2-2541	25	X															
						X														
C5.11	C-F-1		2-2541	26	X															
						X														
C5.11	C-F-1		2-2541	27	X															
						X														
C5.11	C-F-1		2-2541	28	X															
						X														
C5.11	C-F-1		2-2541	29	X															
						X														

NSBU COMPONENT SURVEILLANCE SCHEDULE

Westinghouse Proprietary

COMPONENT: Circumferential Piping Welds > 3/8 in. Nominal Wall Thickness for Piping > NPS 4

89	89		INT		EXAMINATION METHOD			FIRST INTERVAL			SECOND INTERVAL			THIRD INTERVAL			FOURTH INTERVAL			
ITEM NUMBER	CATEGORY NUMBER	DESCRIPTION	SKETCH NUMBER	IDENT. NUMBER	VOL.	SUR	VIS.	1ST	2ND	3RD	1ST	2ND	3RD	1ST	2ND	3RD	1ST	2ND	3RD	REMARKS
								PERIOD			PERIOD			PERIOD			PERIOD			
C5.11	C-F-1		2-2541	30	X															
						X														
C5.11	C-F-1		2-2541	31	X															
						X														
C5.11	C-F-1		2-2541	32	X															
						X														
C5.11	C-F-1		2-2541	33	X															
						X														
C5.11	C-F-1		2-2541	34	X															
						X														
C5.11	C-F-1		2-2541	35	X															
						X														
C5.11	C-F-1		2-2541	36	X															
						X														
C5.11	C-F-1		2-2541	37	X															
						X														
C5.11	C-F-1		2-2542	1	X															
						X														
C5.11	C-F-1		2-2542	2	X															
						X														
C5.11	C-F-1		2-2542	3	X															
						X														
C5.11	C-F-1		2-2542	4	X															
						X														
C5.11	C-F-1		2-2542	5	X															
						X														
C5.11	C-F-1		2-2542	6	X															
						X														
C5.11	C-F-1		2-2542	7	X															
						X														
C5.11	C-F-1		2-2542	8	X															
						X														
C5.11	C-F-1		2-2542	9	X															
						X														
C5.11	C-F-1		2-2542	10	X															
						X														
C5.11	C-F-1		2-2542	11	X															
						X														

NSBU COMPONENT SURVEILLANCE SCHEDULE
Westinghouse Proprietary

COMPONENT: Circumferential Piping Welds > 3/8 in. Nominal Wall Thickness for Piping > NPS 4

89	89		INT		EXAMINATION METHOD			FIRST INTERVAL			SECOND INTERVAL			THIRD INTERVAL			FOURTH INTERVAL			
ITEM NUMBER	CATEGORY NUMBER	DESCRIPTION	SKETCH NUMBER	IDENT. NUMBER	VOL.	SUR	VIS.	1ST	2ND	3RD	1ST	2ND	3RD	1ST	2ND	3RD	1ST	2ND	3RD	REMARKS
								PERIOD			PERIOD			PERIOD			PERIOD			
C5.11	C-F-1		2-2542	12	X															
						X														
C5.11	C-F-1		2-2542	13	X															
						X														
C5.11	C-F-1		2-2542	14	X															
						X														
C5.11	C-F-1		2-2542	15	X															
						X														
C5.11	C-F-1		2-2542	16	X															
						X														
C5.11	C-F-1		2-2542	17	X															
						X														
C5.11	C-F-1		2-2542	18	X															
						X														
C5.11	C-F-1		2-2542	19	X															
						X														
C5.11	C-F-1		2-2542	20	X															
						X														
C5.11	C-F-1		2-2542	21	X															
						X														
C5.11	C-F-1		2-2542	22	X															
						X														
C5.11	C-F-1		2-2542	23	X															
						X														
C5.11	C-F-1		2-2542	24	X										/					
						X									/					
C5.11	C-F-1		2-2542	25	X										/					
						X									/					
C5.11	C-F-1		2-2542	26	X										/					
						X									/					
C5.11	C-F-1		2-2542	27	X										/					
						X									/					
C5.11	C-F-1		2-2542	28	X															
						X														
C5.11	C-F-1		2-2542	29	X															
						X														
C5.11	C-F-1		2-2542	30	X															
						X														

NSBU COMPONENT SURVEILLANCE SCHEDULE
Westinghouse Proprietary

COMPONENT: Circumferential Piping Welds > 3/8 in. Nominal Wall Thickness for Piping > NPS 4

89	89		INT		EXAMINATION METHOD			FIRST INTERVAL			SECOND INTERVAL			THIRD INTERVAL			FOURTH INTERVAL			
ITEM NUMBER	CATEGORY NUMBER	DESCRIPTION	SKETCH NUMBER	IDENT. NUMBER	VOL.	SUR	VIS.	1ST	2ND	3RD	1ST	2ND	3RD	1ST	2ND	3RD	1ST	2ND	3RD	REMARKS
								PERIOD			PERIOD			PERIOD			PERIOD			
C5.11	C-F-1		2-2543	1	X															
						X														
C5.11	C-F-1		2-2543	2	X															
						X														
C5.11	C-F-1		2-2543	3	X															
						X														
C5.11	C-F-1		2-2543	4	X															
						X														
C5.11	C-F-1		2-2543	5	X															
						X														
C5.11	C-F-1		2-2543	6	X															
						X														
C5.11	C-F-1		2-2543	7	X															
						X														
C5.11	C-F-1		2-2543	8	X															
						X														
C5.11	C-F-1		2-2543	9	X															
						X														
C5.11	C-F-1		2-2543	10	X															
						X														
C5.11	C-F-1		2-2543	11	X															
						X														
C5.11	C-F-1		2-2543	12	X															
						X														
C5.11	C-F-1		2-2543	13	X															
						X														
C5.11	C-F-1		2-2543	14	X															
						X														
C5.11	C-F-1		2-2543	15	X											/				
						X										/				
C5.11	C-F-1		2-2543	16	X											/				
						X										/				
C5.11	C-F-1		2-2543	17	X															
						X														
C5.11	C-F-1		2-2543	18	X															
						X														
C5.11	C-F-1		2-2543	19	X															
						X														

NSBU COMPONENT SURVEILLANCE SCHEDULE
Westinghouse Proprietary

COMPONENT: Circumferential Piping Welds ≥ 3/8 in. Nominal Wall Thickness for Piping > NPS 4

89	89		INT		EXAMINATION METHOD			FIRST INTERVAL			SECOND INTERVAL			THIRD INTERVAL			FOURTH INTERVAL			
ITEM NUMBER	CATEGORY NUMBER	DESCRIPTION	SKETCH NUMBER	IDENT. NUMBER	VOL.	SUR	VIS.	1ST	2ND	3RD	1ST	2ND	3RD	1ST	2ND	3RD	1ST	2ND	3RD	REMARKS
								PERIOD			PERIOD			PERIOD			PERIOD			
C5.11	C-F-1		2-2543	20	X															
						X														
C5.11	C-F-1		2-2543	21	X															
						X														
C5.11	C-F-1		2-2543	22	X															
						X														
C5.11	C-F-1		2-2543	23	X															
						X														
C5.11	C-F-1		2-2544	1																
C5.11	C-F-1		2-2544	2																
C5.11	C-F-1		2-2544	3																
C5.11	C-F-1		2-2544	4																
C5.11	C-F-1		2-2544	5																
C5.11	C-F-1		2-2544	6																
C5.11	C-F-1		2-2544	7																
C5.11	C-F-1		2-2544	8																
C5.11	C-F-1		2-2544	9																
C5.11	C-F-1		2-2544	10																
C5.11	C-F-1		2-2544	11																
C5.11	C-F-1		2-2544	12																
C5.11	C-F-1		2-2544	13																
C5.11	C-F-1		2-2544	14																
C5.11	C-F-1		2-2544	15																
C5.11	C-F-1		2-2544	16																
C5.11	C-F-1		2-2544	17																
C5.11	C-F-1		2-2544	18																
C5.11	C-F-1		2-2544	19																
C5.11	C-F-1		2-2544	20																
C5.11	C-F-1		2-2544	21																
C5.11	C-F-1		2-2544	23																
C5.11	C-F-1		2-2546	1	X															
				1		X														
C5.11	C-F-1		2-2546	2	X															
				2		X														
TOTAL ID'S FOR C5.11				460	312	312	0	TOTAL SCHEDULED						24	26	26				
								TOTAL COMPLETED						0	0	0				

NSBU COMPONENT SURVEILLANCE SCHEDULE
Westinghouse Proprietary

COMPONENT: Longitudinal Piping Welds > 3/8 in. Nominal Wall Thickness for Piping > NPS 4

89	89		INT		EXAMINATION METHOD			FIRST INTERVAL			SECOND INTERVAL			THIRD INTERVAL			FOURTH INTERVAL			
ITEM NUMBER	CATEGORY NUMBER	DESCRIPTION	SKETCH NUMBER	IDENT. NUMBER	VOL.	SUR	VIS.	1ST	2ND	3RD	1ST	2ND	3RD	1ST	2ND	3RD	1ST	2ND	3RD	REMARKS
								PERIOD			PERIOD			PERIOD			PERIOD			
C5.12	C-F-1		2-2500	53LS	X															REFERENCE TABLE 4.0
						X														Code Case
C5.12	C-F-1		2-2500	54LS	X															N-524 Applies
						X														
C5.12	C-F-1		2-2500	55LS	X															
						X														
C5.12	C-F-1		2-2500	56LS	X															
						X														
C5.12	C-F-1		2-2500	57LS	X															
						X														
C5.12	C-F-1		2-2500	58LS	X															
						X														
C5.12	C-F-1		2-2500	59LS	X															
						X														
C5.12	C-F-1		2-2500	60LS	X															
						X														
C5.12	C-F-1		2-2500	61LS	X									/						
						X								/						
C5.12	C-F-1		2-2500	62LS	X									/						
						X								/						
C5.12	C-F-1		2-2500	63LS	X															
						X														
C5.12	C-F-1		2-2500	64LS	X									/						
						X								/						
C5.12	C-F-1		2-2500	69LS	X															
						X														
C5.12	C-F-1		2-2500	70LS	X															
						X														
C5.12	C-F-1		2-2500	71LS	X									/						
						X								/						
C5.12	C-F-1		2-2500	72LS	X									/						
						X								/						
C5.12	C-F-1		2-2500	73LS	X									/						
						X								/						
C5.12	C-F-1		2-2500	74LS	X															
C5.12	C-F-1		2-2510	38LS	X									/						
						X								/						

NSBU COMPONENT SURVEILLANCE SCHEDULE

Westinghouse Proprietary

COMPONENT: Longitudinal Piping Welds > 3/8 in. Nominal Wall Thickness for Piping > NPS 4

89	89		INT		EXAMINATION METHOD			FIRST INTERVAL			SECOND INTERVAL			THIRD INTERVAL			FOURTH INTERVAL			
ITEM NUMBER	CATEGORY NUMBER	DESCRIPTION	SKETCH NUMBER	IDENT. NUMBER	VOL.	SUR	VIS.	1ST	2ND	3RD	1ST	2ND	3RD	1ST	2ND	3RD	1ST	2ND	3RD	REMARKS
								PERIOD			PERIOD			PERIOD			PERIOD			
C5.12	C-F-1		2-2510	39LS	X															
						X														
C5.12	C-F-1		2-2510	40LS	X									/						
						X								/						
C5.12	C-F-1		2-2510	41LS	X															
						X														
C5.12	C-F-1		2-2511	33LS	X															
						X														
C5.12	C-F-1		2-2511	34LS	X															
						X														
C5.12	C-F-1		2-2511	35LS	X															
						X														
C5.12	C-F-1		2-2511	36LS	X															
						X														
C5.12	C-F-1		2-2541	38LS	X											/				
						X										/				
TOTAL ID'S FOR C5.12				27	27	26	0	TOTAL SCHEDULED						16	0	2				
								TOTAL COMPLETED						0	0	0				

NSBU COMPONENT SURVEILLANCE SCHEDULE

COMPONENT: Circumferential Piping Welds > 1/5 in. Nominal Wall Thickness for Piping ≥ NPS 2 and ≤ NPS 4

89	89		INT		EXAMINATION METHOD			FIRST INTERVAL			SECOND INTERVAL			THIRD INTERVAL			FOURTH INTERVAL			
ITEM NUMBER	CATEGORY NUMBER	DESCRIPTION	SKETCH NUMBER	IDENT. NUMBER	VOL.	SUR	VIS.	1ST	2ND	3RD	1ST	2ND	3RD	1ST	2ND	3RD	1ST	2ND	3RD	REMARKS
								PERIOD			PERIOD			PERIOD			PERIOD			
C5.21	C-F-1		2-2540	36	X															REFERENCE TABLE 4.0
				36		X														
C5.21	C-F-1		2-2540	37	X									/						
				37		X								/						
C5.21	C-F-1		2-2540	38	X									/						
				38		X								/						
C5.21	C-F-1		2-2540	39	X															
				39		X														
C5.21	C-F-1		2-2540	40	X															
				40		X														
C5.21	C-F-1		2-2540	41	X															
				41		X														
C5.21	C-F-1		2-2540	42	X															
				42		X														
C5.21	C-F-1		2-2540	43	X															
				43		X														
C5.21	C-F-1		2-2540	44	X															
				44		X														
C5.21	C-F-1		2-2540	45	X															
				45		X														
C5.21	C-F-1		2-2540	46	X															
				46		X														
C5.21	C-F-1		2-2540	47	X															
				47		X														
C5.21	C-F-1		2-2543	24	X															
				24		X														
C5.21	C-F-1		2-2543	25	X															
				25		X														
C5.21	C-F-1		2-2543	26	X															
				26		X														
C5.21	C-F-1		2-2543	27	X															
				27		X														
C5.21	C-F-1		2-2543	28	X															
				28		X														
C5.21	C-F-1		2-2543	29	X															
				29		X														
C5.21	C-F-1		2-2543	30	X															
				30		X														

NSBU COMPONENT SURVEILLANCE SCHEDULE
Westinghouse Proprietary

COMPONENT: Circumferential Piping Welds > 1/5 in. Nominal Wall Thickness for Piping ≥ NPS 2 and ≤ NPS 4

89	89		INT		EXAMINATION METHOD			FIRST INTERVAL			SECOND INTERVAL			THIRD INTERVAL			FOURTH INTERVAL			
ITEM NUMBER	CATEGORY NUMBER	DESCRIPTION	SKETCH NUMBER	IDENT. NUMBER	VOL.	SUR	VIS.	1ST	2ND	3RD	1ST	2ND	3RD	1ST	2ND	3RD	1ST	2ND	3RD	REMARKS
								PERIOD			PERIOD			PERIOD			PERIOD			
C5.21	C-F-1		2-2543	31	X															
				31		X														
C5.21	C-F-1		2-2543	32	X															
				32		X														
C5.21	C-F-1		2-2543	33	X															
				33		X														
C5.21	C-F-1		2-2543	34	X											/				
				34		X										/				
C5.21	C-F-1		2-2543	35	X											/				
				35		X										/				
C5.21	C-F-1		2-2547	1	X															Line # 145
				1		X														
C5.21	C-F-1		2-2547	2	X															Line # 145
				2		X														
C5.21	C-F-1		2-2547	3	X															Line # 145
				3		X														
C5.21	C-F-1		2-2547	4	X															Line # 145
				4		X														
C5.21	C-F-1		2-2547	5	X															Line # 145
				5		X														
C5.21	C-F-1		2-2547	6	X															Line # 145
				6		X														
C5.21	C-F-1		2-2547	7	X															Line # 145
				7		X														
C5.21	C-F-1		2-2547	8	X															Line # 145
				8		X														
C5.21	C-F-1		2-2547	9	X															Line # 145
				9		X														
C5.21	C-F-1		2-2547	10	X															Line # 145
				10		X														
C5.21	C-F-1		2-2547	11	X															Line # 145
				11		X														
C5.21	C-F-1		2-2547	12	X															Line # 145
				12		X														
C5.21	C-F-1		2-2547	13	X															Line # 145
				13		X														
C5.21	C-F-1		2-2547	14	X															Line # 145
				14		X														

NSBU COMPONENT SURVEILLANCE SCHEDULE

Westinghouse Proprietary

COMPONENT: Circumferential Piping Welds > 1/5 in. Nominal Wall Thickness for Piping ≥ NPS 2 and ≤ NPS 4

89	89		INT		EXAMINATION METHOD			FIRST INTERVAL			SECOND INTERVAL			THIRD INTERVAL			FOURTH INTERVAL			
ITEM NUMBER	CATEGORY NUMBER	DESCRIPTION	SKETCH NUMBER	IDENT. NUMBER	VOL.	SUR	VIS.	1ST	2ND	3RD	1ST	2ND	3RD	1ST	2ND	3RD	1ST	2ND	3RD	REMARKS
								PERIOD			PERIOD			PERIOD			PERIOD			
C5.21	C-F-1		2-2547	15	X															Line # 145
				15		X														
C5.21	C-F-1		2-2547	16	X															Line # 145
				16		X														
C5.21	C-F-1		2-2547	17	X															Line # 145
				17		X														
C5.21	C-F-1		2-2547	18	X															Line # 145
				18		X														
C5.21	C-F-1		2-2547	19	X															Line # 145
				19		X														
C5.21	C-F-1		2-2546	3	X										/					
				3		X									/					
C5.21	C-F-1		2-2546	4	X										/					
				4		X									/					
C5.21	C-F-1		2-2546	5	X										/					
				5		X									/					
C5.21	C-F-1		2-2546	6	X															
				6		X														
C5.21	C-F-1		2-2546	7	X															
				7		X														
C5.21	C-F-1		2-2546	8	X															
				8		X														
C5.21	C-F-1		2-2546	9	X															
				9		X														
C5.21	C-F-1		2-2546	10	X															
				10		X														
C5.21	C-F-1		2-2546	11	X															
				11		X														
C5.21	C-F-1		2-2546	12	X															
				12		X														
C5.21	C-F-1		2-2546	13	X															
				13		X														
C5.21	C-F-1		2-2546	14	X															
				14		X														
C5.21	C-F-1		2-2546	15	X															
				15		X														
C5.21	C-F-1		2-2546	16	X															
				16		X														

NSBU COMPONENT SURVEILLANCE SCHEDULE
Westinghouse Proprietary

COMPONENT: Circumferential Piping Welds > 1/5 in. Nominal Wall Thickness for Piping ≥ NPS 2 and ≤ NPS 4

89	89		INT		EXAMINATION METHOD			FIRST INTERVAL			SECOND INTERVAL			THIRD INTERVAL			FOURTH INTERVAL			
ITEM NUMBER	CATEGORY NUMBER	DESCRIPTION	SKETCH NUMBER	IDENT. NUMBER	VOL.	SUR	VIS.	1ST	2ND	3RD	1ST	2ND	3RD	1ST	2ND	3RD	1ST	2ND	3RD	REMARKS
								PERIOD			PERIOD			PERIOD			PERIOD			
C5.21	C-F-1		2-2546	17	X															
				17		X														
C5.21	C-F-1		2-2546	18	X															
				18		X														
C5.21	C-F-1		2-2546	19	X															
				19		X														
C5.21	C-F-1		2-2546	20	X															
				20		X														
C5.21	C-F-1		2-2546	21	X															
				21		X														
C5.21	C-F-1		2-2546	22	X															
				22		X														
C5.21	C-F-1		2-2546	23	X															
				23		X														
C5.21	C-F-1		2-2546	24	X															
				24		X														
C5.21	C-F-1		2-2546	25	X															
				25		X														
C5.21	C-F-1		2-2546	26	X															
				26		X														
C5.21	C-F-1		2-2546	27	X															
				27		X														
C5.21	C-F-1		2-2546	28	X															
				28		X														
C5.21	C-F-1		2-2546	29	X															
				29		X														
C5.21	C-F-1		2-2546	30	X															
				30		X														
C5.21	C-F-1		2-2546	31	X															
				31		X														
C5.21	C-F-1		2-2546	32	X															
				32		X														
C5.21	C-F-1		2-2546	33	X															
				33		X														
C5.21	C-F-1		2-2546	34	X															
				34		X														
C5.21	C-F-1		2-2546	35	X															
				35		X														
C5.21	C-F-1		2-2546	36	X															
				36		X														

NSBU COMPONENT SURVEILLANCE SCHEDULE
Westinghouse Proprietary

COMPONENT: Circumferential Piping Welds > 1/5 in. Nominal Wall Thickness for Piping ≥ NPS 2 and ≤ NPS 4

89	89		INT		EXAMINATION METHOD			FIRST INTERVAL			SECOND INTERVAL			THIRD INTERVAL			FOURTH INTERVAL			
ITEM NUMBER	CATEGORY NUMBER	DESCRIPTION	SKETCH NUMBER	IDENT. NUMBER	VOL.	SUR	VIS.	1ST	2ND	3RD	1ST	2ND	3RD	1ST	2ND	3RD	1ST	2ND	3RD	REMARKS
								PERIOD			PERIOD			PERIOD			PERIOD			
C5.21	C-F-1		2-2546	37	X															
				37		X														
C5.21	C-F-1		2-2546	38	X															
				38		X														
C5.21	C-F-1		2-2546	39	X															
				39		X														
C5.21	C-F-1		2-2548	1	X															
				1		X														
C5.21	C-F-1		2-2548	2	X															
				2		X														
C5.21	C-F-1		2-2548	3	X															
				3		X														
C5.21	C-F-1		2-2548	4	X															
				4		X														
C5.21	C-F-1		2-2548	5	X															
				5		X														
C5.21	C-F-1		2-2548	6	X															
				6		X														
C5.21	C-F-1		2-2548	7	X															
				7		X														
C5.21	C-F-1		2-2548	8	X															
				8		X														
C5.21	C-F-1		2-2548	9	X															
				9		X														
TOTAL ID'S FOR C5.21				89	89	89	0	TOTAL SCHEDULED						4	6	4				
								TOTAL COMPLETED						0	0	0				

NSBU COMPONENT SURVEILLANCE SCHEDULE

COMPONENT: Longitudinal Piping Welds > 1/5 in. Nominal Wall Thickness for Piping > NPS 2 and < NPS 4

89	89			INT	EXAMINATION METHOD			FIRST INTERVAL			SECOND INTERVAL			THIRD INTERVAL			FOURTH INTERVAL			
ITEM NUMBER	CATEGORY NUMBER	DESCRIPTION	SKETCH NUMBER	IDENT. NUMBER	VOL.	SUR	VIS.	1ST	2ND	3RD	1ST	2ND	3RD	1ST	2ND	3RD	1ST	2ND	3RD	REMARKS
								PERIOD			PERIOD			PERIOD			PERIOD			
				NO C5.22 Welds																
TOTAL ID'S FOR				0	0	0	0	TOTAL SCHEDULED						0	0	0				
								TOTAL COMPLETED						0	0	0				

NSBU COMPONENT SURVEILLANCE SCHEDULE
Westinghouse Proprietary

COMPONENT: Socket Welds

89	89		INT		EXAMINATION METHOD			FIRST INTERVAL			SECOND INTERVAL			THIRD INTERVAL			FOURTH INTERVAL			
ITEM NUMBER	CATEGORY NUMBER	DESCRIPTION	SKETCH NUMBER	IDENT. NUMBER	VOL.	SUR	VIS.	1ST	2ND	3RD	1ST	2ND	3RD	1ST	2ND	3RD	1ST	2ND	3RD	REMARKS
								PERIOD			PERIOD			PERIOD			PERIOD			
C5.30	C-F-1		2-2546	40		X														REFERENCE TABLE 4.0
C5.30	C-F-1		2-2546	41		X														
C5.30	C-F-1		2-2546	42		X														
C5.30	C-F-1		2-2555	1		X														
C5.30	C-F-1		2-2555	2		X														
C5.30	C-F-1		2-2555	3		X														
C5.30	C-F-1		2-2555	4		X														
C5.30	C-F-1		2-2550	1		X														
C5.30	C-F-1		2-2550	2		X														
C5.30	C-F-1		2-2550	3		X								/						
C5.30	C-F-1		2-2550	4		X								/						
C5.30	C-F-1		2-2550	5		X								/						
C5.30	C-F-1		2-2550	6		X														
C5.30	C-F-1		2-2550	7		X														
C5.30	C-F-1		2-2550	8		X														
C5.30	C-F-1		2-2550	9		X														
C5.30	C-F-1		2-2550	10		X														
C5.30	C-F-1		2-2549	2		X														
C5.30	C-F-1		2-2549	3		X														
C5.30	C-F-1		2-2549	4		X														
C5.30	C-F-1		2-2549	5		X														
C5.30	C-F-1		2-2549	6		X														
C5.30	C-F-1		2-2549	7		X														
C5.30	C-F-1		2-2549	8		X														
C5.30	C-F-1		2-2549	9		X														
C5.30	C-F-1		2-2549	10		X														
C5.30	C-F-1		2-2549	11		X														
C5.30	C-F-1		2-2549	12		X														
C5.30	C-F-1		2-2549	13		X														
C5.30	C-F-1		2-2549	14		X														
C5.30	C-F-1		2-2549	15		X														
C5.30	C-F-1		2-2549	16		X														
C5.30	C-F-1		2-2549	17		X														
C5.30	C-F-1		2-2549	18		X														
C5.30	C-F-1		2-2549	19		X														
C5.30	C-F-1		2-2549	20		X														

NSBU COMPONENT SURVEILLANCE SCHEDULE
Westinghouse Proprietary

COMPONENT: Socket Welds

89	89		INT		EXAMINATION METHOD			FIRST INTERVAL			SECOND INTERVAL			THIRD INTERVAL			FOURTH INTERVAL			
ITEM NUMBER	CATEGORY NUMBER	DESCRIPTION	SKETCH NUMBER	IDENT. NUMBER	VOL.	SUR	VIS.	1ST	2ND	3RD	1ST	2ND	3RD	1ST	2ND	3RD	1ST	2ND	3RD	REMARKS
								PERIOD			PERIOD			PERIOD			PERIOD			
C5.30	C-F-1		2-2549	21		X									/					
C5.30	C-F-1		2-2549	22		X									/					
C5.30	C-F-1		2-2549	23		X									/					
C5.30	C-F-1		2-2549	24		X									/					
C5.30	C-F-1		2-2549	25		X														
C5.30	C-F-1		2-2554	2		X														
C5.30	C-F-1		2-2554	3		X														
C5.30	C-F-1		2-2554	4		X														
C5.30	C-F-1		2-2554	5		X														
C5.30	C-F-1		2-2556	1		X														
C5.30	C-F-1		2-2556	2		X														
C5.30	C-F-1		2-2556	3		X														
C5.30	C-F-1		2-2557	1		X														
C5.30	C-F-1		2-2557	2		X														
C5.30	C-F-1		2-2557	3		X														
C5.30	C-F-1		2-2553	2		X														
C5.30	C-F-1		2-2553	3		X										/				
C5.30	C-F-1		2-2553	4		X										/				
C5.30	C-F-1		2-2553	5		X														
C5.30	C-F-1		2-2553	6		X														
C5.30	C-F-1		2-2553	7		X														
C5.30	C-F-1		2-2553	8		X														
C5.30	C-F-1		2-2553	9		X														
C5.30	C-F-1		2-2553	10		X														
C5.30	C-F-1		2-2553	11		X														
C5.30	C-F-1		2-2551	1		X														
C5.30	C-F-1		2-2551	2		X														
C5.30	C-F-1		2-2551	3		X														
C5.30	C-F-1		2-2551	4		X														
C5.30	C-F-1		2-2551	5		X														
C5.30	C-F-1		2-2551	6		X														
C5.30	C-F-1		2-2551	7		X														
C5.30	C-F-1		2-2551	8		X														
C5.30	C-F-1		2-2551	9		X														
C5.30	C-F-1		2-2551	10		X														

NSBU COMPONENT SURVEILLANCE SCHEDULE
Westinghouse Proprietary

COMPONENT: Socket Welds

89	89		INT		EXAMINATION METHOD			FIRST INTERVAL			SECOND INTERVAL			THIRD INTERVAL			FOURTH INTERVAL			
ITEM NUMBER	CATEGORY NUMBER	DESCRIPTION	SKETCH NUMBER	IDENT. NUMBER	VOL.	SUR	VIS.	1ST	2ND	3RD	1ST	2ND	3RD	1ST	2ND	3RD	1ST	2ND	3RD	REMARKS
								PERIOD			PERIOD			PERIOD			PERIOD			
C5.30	C-F-1		2-2551	11		X														
C5.30	C-F-1		2-2551	12		X														
C5.30	C-F-1		2-2551	13		X														
C5.30	C-F-1		2-2551	14		X														
C5.30	C-F-1		2-2551	15		X														
C5.30	C-F-1		2-2551	16		X														
C5.30	C-F-1		2-2551	17		X														
C5.30	C-F-1		2-2551	18		X														
C5.30	C-F-1		2-2551	19		X														
C5.30	C-F-1		2-2551	20		X														
C5.30	C-F-1		2-2551	21		X														
C5.30	C-F-1		2-2551	22		X														
C5.30	C-F-1		2-2551	23		X														
C5.30	C-F-1		2-2551	24		X														
C5.30	C-F-1		2-2552	1		X														
C5.30	C-F-1		2-2552	2		X														
C5.30	C-F-1		2-2552	3		X														
C5.30	C-F-1		2-2552	4		X														
C5.30	C-F-1		2-2552	5		X														
C5.30	C-F-1		2-2552	6		X														
C5.30	C-F-1		2-2552	7		X														
C5.30	C-F-1		2-2552	8		X														
C5.30	C-F-1		2-2552	9		X														
C5.30	C-F-1		2-2552	10		X														
C5.30	C-F-1		2-2552	11		X														
C5.30	C-F-1		2-2552	12		X														
C5.30	C-F-1		2-2552	13		X														
C5.30	C-F-1		2-2552	14		X														
C5.30	C-F-1		2-2552	15		X														
C5.30	C-F-1		2-2552	16		X														
C5.30	C-F-1		2-2548	10		X														
C5.30	C-F-1		2-2548	11		X														
C5.30	C-F-1		2-2548	12		X														
C5.30	C-F-1		2-2548	13		X														
C5.30	C-F-1		2-2548	14		X														
C5.30	C-F-1		2-2548	15		X														
C5.30	C-F-1		2-2548	16		X														
C5.30	C-F-1		2-2548	17		X														

NSBU COMPONENT SURVEILLANCE SCHEDULE
Westinghouse Proprietary

COMPONENT: Socket Welds

89	89		INT		EXAMINATION METHOD			FIRST INTERVAL			SECOND INTERVAL			THIRD INTERVAL			FOURTH INTERVAL			
ITEM NUMBER	CATEGORY NUMBER	DESCRIPTION	SKETCH NUMBER	IDENT. NUMBER	VOL.	SUR	VIS.	1ST	2ND	3RD	1ST	2ND	3RD	1ST	2ND	3RD	1ST	2ND	3RD	REMARKS
								PERIOD			PERIOD			PERIOD			PERIOD			
C5.30	C-F-1		2-2548	18		X														
C5.30	C-F-1		2-2548	19		X														
C5.30	C-F-1		2-2548	20		X														
C5.30	C-F-1		2-2548	21		X														
C5.30	C-F-1		2-2548	22		X														
C5.30	C-F-1		2-2548	23		X														
C5.30	C-F-1		2-2548	24		X														
C5.30	C-F-1		2-2548	25		X														
C5.30	C-F-1		2-2548	26		X														
C5.30	C-F-1		2-2548	27		X										/				
C5.30	C-F-1		2-2548	28		X										/				
C5.30	C-F-1		2-2548	29		X														
C5.30	C-F-1		2-2548	30		X														
C5.30	C-F-1		2-2548	31		X														
TOTAL ID'S FOR C5.30				123	0	123	0	TOTAL SCHEDULED						3	4	4				
								TOTAL COMPLETED						0	0	0				

NSBU COMPONENT SURVEILLANCE SCHEDULE

Westinghouse Proprietary

COMPONENT: Pipe Branch Connections of Branch Piping > NPS 2 Circumferential Welds

89	89		INT		EXAMINATION METHOD			FIRST INTERVAL			SECOND INTERVAL			THIRD INTERVAL			FOURTH INTERVAL			
ITEM NUMBER	CATEGORY NUMBER	DESCRIPTION	SKETCH NUMBER	IDENT. NUMBER	VOL.	SUR	VIS.	1ST	2ND	3RD	1ST	2ND	3RD	1ST	2ND	3RD	1ST	2ND	3RD	REMARKS
								PERIOD			PERIOD			PERIOD			PERIOD			
C5.41	C-F-1		2-2544	22(BC)		X									/					REFERENCE TABLE 4.0
C5.41	C-F-1		Line #56A	1(BC)		X														
C5.41	C-F-1		Line #594	1(BC)		X														
C5.41	C-F-1		Line #843	1(BC)		X										/				
TOTAL ID'S FOR C5.41				4	0	4	0	TOTAL SCHEDULED						0	1	1				
								TOTAL COMPLETED						0	0	0				

NSBU COMPONENT SURVEILLANCE SCHEDULE

Westinghouse Proprietary

COMPONENT: Containment Spray System Circumferential Piping Welds

89	89		INT		EXAMINATION METHOD			FIRST INTERVAL			SECOND INTERVAL			THIRD INTERVAL			FOURTH INTERVAL			
ITEM NUMBER	CATEGORY NUMBER	DESCRIPTION	SKETCH NUMBER	IDENT. NUMBER	VOL.	SUR	VIS.	1ST	2ND	3RD	1ST	2ND	3RD	1ST	2ND	3RD	1ST	2ND	3RD	REMARKS
								PERIOD			PERIOD			PERIOD			PERIOD			
AUG.	C-F-1		2-2601	1	X															
AUG.	C-F-1		2-2601	2	X															
AUG.	C-F-1		2-2601	3	X															
AUG.	C-F-1		2-2601	4	X															
AUG.	C-F-1		2-2601	5	X															
AUG.	C-F-1		2-2601	6	X															
AUG.	C-F-1		2-2601	7	X															
AUG.	C-F-1		2-2601	8	X															
AUG.	C-F-1		2-2601	9	X															
AUG.	C-F-1		2-2601	\10	X															
AUG.	C-F-1		2-2601	11	X															
AUG.	C-F-1		2-2601	12	X															
AUG.	C-F-1		2-2601	13	X															
AUG.	C-F-1		2-2601	14	X															
AUG.	C-F-1		2-2601	15	X															
AUG.	C-F-1		2-2601	16	X															
AUG.	C-F-1		2-2601	17	X															
AUG.	C-F-1		2-2601	18	X															
AUG.	C-F-1		2-2601	19	X															
AUG.	C-F-1		2-2601	20	X											/				
AUG.	C-F-1		2-2601	21	X											/				
AUG.	C-F-1		2-2601	22	X											/				
AUG.	C-F-1		2-2601	23	X															
AUG.	C-F-1		2-2601	24	X															
AUG.	C-F-1		2-2601	25	X															
AUG.	C-F-1		2-2601	26	X															
AUG.	C-F-1		2-2601	27	X															
AUG.	C-F-1		2-2601	28	X															
AUG.	C-F-1		2-2601	29	X															
AUG.	C-F-1		2-2601	30	X															
AUG.	C-F-1		2-2601	31	X															
AUG.	C-F-1		2-2601	32	X															
AUG.	C-F-1		2-2601	33	X															
AUG.	C-F-1		2-2601	34	X															
AUG.	C-F-1		2-2601	35	X															
AUG.	C-F-1		2-2601	36	X															

NSBU COMPONENT SURVEILLANCE SCHEDULE
Westinghouse Proprietary

COMPONENT: Containment Spray System Circumferential Piping Welds

89	89		INT		EXAMINATION METHOD			FIRST INTERVAL			SECOND INTERVAL			THIRD INTERVAL			FOURTH INTERVAL			
ITEM NUMBER	CATEGORY NUMBER	DESCRIPTION	SKETCH NUMBER	IDENT. NUMBER	VOL.	SUR	VIS.	1ST	2ND	3RD	1ST	2ND	3RD	1ST	2ND	3RD	1ST	2ND	3RD	REMARKS
								PERIOD			PERIOD			PERIOD			PERIOD			
AUG.	C-F-1		2-2602	1	X															
AUG.	C-F-1		2-2602	2	X															
AUG.	C-F-1		2-2602	3	X															
AUG.	C-F-1		2-2602	4	X															
AUG.	C-F-1		2-2602	5	X															
AUG.	C-F-1		2-2602	6	X															
AUG.	C-F-1		2-2602	7	X															
AUG.	C-F-1		2-2602	8	X															
AUG.	C-F-1		2-2602	9	X															
AUG.	C-F-1		2-2602	10	X															
AUG.	C-F-1		2-2602	11	X															
AUG.	C-F-1		2-2602	12	X															
AUG.	C-F-1		2-2602	13	X															
AUG.	C-F-1		2-2602	14	X															
AUG.	C-F-1		2-2602	15	X															
AUG.	C-F-1		2-2602	16	X															
AUG.	C-F-1		2-2602	17	X															
AUG.	C-F-1		2-2602	18	X															
AUG.	C-F-1		2-2602	19	X															
AUG.	C-F-1		2-2602	20	X										/					
AUG.	C-F-1		2-2602	21	X										/					
AUG.	C-F-1		2-2602	22	X										/					
AUG.	C-F-1		2-2602	23	X															
AUG.	C-F-1		2-2602	24	X															
AUG.	C-F-1		2-2602	25	X															
AUG.	C-F-1		2-2602	26	X															
AUG.	C-F-1		2-2602	27	X															
AUG.	C-F-1		2-2602	28	X															
AUG.	C-F-1		2-2602	29	X															
AUG.	C-F-1		2-2602	30	X															
AUG.	C-F-1		2-2602	31	X															
AUG.	C-F-1		2-2602	32	X															
AUG.	C-F-1		2-2602	33	X															
AUG.	C-F-1		2-2602	34	X															
AUG.	C-F-1		2-2602	35	X															
AUG.	C-F-1		2-2602	36	X															
								TOTAL SCHEDULED						0	3	3				
TOTAL ID'S FOR AUG.				72	72	0	0	TOTAL COMPLETED						0	0	0				

NSBU COMPONENT SURVEILLANCE SCHEDULE

COMPONENT: Circumferential Piping Welds > 3/8 in. Nominal Wall Thickness for Piping > NPS 4

89	89		INT		EXAMINATION METHOD			FIRST INTERVAL			SECOND INTERVAL			THIRD INTERVAL			FOURTH INTERVAL			
ITEM NUMBER	CATEGORY NUMBER	DESCRIPTION	SKETCH NUMBER	IDENT. NUMBER	VOL.	SUR	VIS.	1ST	2ND	3RD	1ST	2ND	3RD	1ST	2ND	3RD	1ST	2ND	3RD	REMARKS
								PERIOD			PERIOD			PERIOD			PERIOD			
C5.51	C-F-2		2-2100	1	X											/				
				1		X										/				
C5.51	C-F-2		2-2100	2	X											/				
				2		X										/				
C5.51	C-F-2		2-2100	3	X															
				3		X														
C5.51	C-F-2		2-2100	5	X															
				5		X														
C5.51	C-F-2		2-2100	6	X															
				6		X														
C5.51	C-F-2		2-2100	7	X															
				7		X														
C5.51	C-F-2		2-2100	8	X															
				8		X														
C5.51	C-F-2		2-2100	9	X															
				9		X														
C5.51	C-F-2		2-2100	10	X									/						
				10		X								/						
C5.51	C-F-2		2-2100	11	X									/						
				11		X								/						
C5.51	C-F-2		2-2101	1	X															
				1		X														
C5.51	C-F-2		2-2101	3	X									/						
				3		X								/						
C5.51	C-F-2		2-2101	4	X															
				4		X														
C5.51	C-F-2		2-2101	5	X															
				5		X														
C5.51	C-F-2		2-2101	6	X															
				6		X														
C5.51	C-F-2		2-2101	8	X															
				8		X														
C5.51	C-F-2		2-2101	9	X															
				9		X														
C5.51	C-F-2		2-2101	11	X															
				11		X														

NSBU COMPONENT SURVEILLANCE SCHEDULE

Westinghouse Proprietary

COMPONENT: Circumferential Piping Welds ≥ 3/8 in. Nominal Wall Thickness for Piping > NPS 4

89	89		INT		EXAMINATION METHOD			FIRST INTERVAL			SECOND INTERVAL			THIRD INTERVAL			FOURTH INTERVAL			
ITEM NUMBER	CATEGORY NUMBER	DESCRIPTION	SKETCH NUMBER	IDENT. NUMBER	VOL.	SUR	VIS.	1ST	2ND	3RD	1ST	2ND	3RD	1ST	2ND	3RD	1ST	2ND	3RD	REMARKS
								PERIOD			PERIOD			PERIOD			PERIOD			
C5.51	C-F-2		2-2101	12	X															
				12		X														
C5.51	C-F-2		2-2101	13	X															
				13		X														
C5.51	C-F-2		2-2101	14	X															
				14		X														
C5.51	C-F-2		2-2101	15	X															
				15		X														
C5.51	C-F-2		2-2101	17	X															
				17		X														
C5.51	C-F-2		2-2101	18	X															
				18		X														
C5.51	C-F-2		2-2101	20	X															
				20		X														
C5.51	C-F-2		2-2101	21	X										/					
				21		X									/					
C5.51	C-F-2		2-2101	23	X										/					
				23		X									/					
C5.51	C-F-2		2-2101	24	X															
				24		X														
C5.51	C-F-2		2-2101	25	X										/					
				25		X									/					
C5.51	C-F-2		2-2101	26	X										/					
				26		X									/					
C5.51	C-F-2		2-2101	27	X															
				27		X														
C5.51	C-F-2		2-2101	28	X															
				28		X														
C5.51	C-F-2		2-2101	29	X															
				29		X														
C5.51	C-F-2		2-2101	30	X															
				30		X														
C5.51	C-F-2		2-2101	31	X															
				31		X														

NSBU COMPONENT SURVEILLANCE SCHEDULE

COMPONENT: Circumferential Piping Welds > 3/8 in. Nominal Wall Thickness for Piping > NPS 4

89	89		INT		EXAMINATION METHOD			FIRST INTERVAL			SECOND INTERVAL			THIRD INTERVAL			FOURTH INTERVAL			
ITEM NUMBER	CATEGORY NUMBER	DESCRIPTION	SKETCH NUMBER	IDENT. NUMBER	VOL.	SUR	VIS.	1ST	2ND	3RD	1ST	2ND	3RD	1ST	2ND	3RD	1ST	2ND	3RD	REMARKS
								PERIOD			PERIOD			PERIOD			PERIOD			
C5.51	C-F-2		2-2101	32	X															
				32		X														
C5.51	C-F-2		2-2101	33	X															
				33		X														
C5.51	C-F-2		2-2101	34	X															
				34		X														
C5.51	C-F-2		2-2101	35	X															
				35		X														
				35																
C5.51	C-F-2		2-2102	1	X															
				1		X														
C5.51	C-F-2		2-2102	2	X															
				2		X														
C5.51	C-F-2		2-2102	3	X															
				3		X														
C5.51	C-F-2		2-2102	4	X															
				4		X														
C5.51	C-F-2		2-2102	5	X															
				5		X														
C5.51	C-F-2		2-2102	6	X															
				6		X														
C5.51	C-F-2		2-2102	7	X															
				7		X														
C5.51	C-F-2		2-2102	8	X															
				8		X														
C5.51	C-F-2		2-2102	9	X															
				9		X														
C5.51	C-F-2		2-2102	10	X															
				10		X														
C5.51	C-F-2		2-2102	11	X															
				11		X														
C5.51	C-F-2		2-2102	12	X															
				12		X														

NSBU COMPONENT SURVEILLANCE SCHEDULE

Westinghouse Proprietary

COMPONENT: Circumferential Piping Welds > 3/8 in. Nominal Wall Thickness for Piping > NPS 4

89	89		INT		EXAMINATION METHOD			FIRST INTERVAL			SECOND INTERVAL			THIRD INTERVAL			FOURTH INTERVAL			
ITEM NUMBER	CATEGORY NUMBER	DESCRIPTION	SKETCH NUMBER	IDENT. NUMBER	VOL.	SUR	VIS.	1ST	2ND	3RD	1ST	2ND	3RD	1ST	2ND	3RD	1ST	2ND	3RD	REMARKS
								PERIOD			PERIOD			PERIOD			PERIOD			
C5.51	C-F-2		2-2102	13	X															
				13		X														
C5.51	C-F-2		2-2200	1	X															
				1		X														
C5.51	C-F-2		2-2200	2	X															
				2		X														
C5.51	C-F-2		2-2200	3	X															
				3		X														
C5.51	C-F-2		2-2200	5	X															
				5		X														
C5.51	C-F-2		2-2200	6	X															
				6		X														
C5.51	C-F-2		2-2200	7	X															
				7		X														
C5.51	C-F-2		2-2200	8	X															
				8		X														
C5.51	C-F-2		2-2200	9	X															
				9		X														
C5.51	C-F-2		2-2200	10	X															
				10		X														
C5.51	C-F-2		2-2200	11	X															
				11		X														
C5.51	C-F-2		2-2200	12	X															
				12		X														
C5.51	C-F-2		2-2200	13	X															
				13		X														
C5.51	C-F-2		2-2200	14	X															
				14		X														
C5.51	C-F-2		2-2200	15	X															
				15		X														
C5.51	C-F-2		2-2201	1	X															
				1		X														

NSBU COMPONENT SURVEILLANCE SCHEDULE

Westinghouse Proprietary

COMPONENT: Circumferential Piping Welds > 3/8 in. Nominal Wall Thickness for Piping > NPS 4

89	89		INT		EXAMINATION METHOD			FIRST INTERVAL			SECOND INTERVAL			THIRD INTERVAL			FOURTH INTERVAL			
ITEM NUMBER	CATEGORY NUMBER	DESCRIPTION	SKETCH NUMBER	IDENT. NUMBER	VOL.	SUR	VTS.	1ST	2ND	3RD	1ST	2ND	3RD	1ST	2ND	3RD	1ST	2ND	3RD	REMARKS
								PERIOD			PERIOD			PERIOD			PERIOD			
C5.51	C-F-2		2-2201	2	X															
				2		X														
C5.51	C-F-2		2-2201	4	X															
				4		X														
C5.51	C-F-2		2-2201	5	X															
				5		X														
C5.51	C-F-2		2-2201	7	X															
				7		X														
C5.51	C-F-2		2-2201	8	X															
				8		X														
C5.51	C-F-2		2-2201	10	X															
				10		X														
C5.51	C-F-2		2-2201	11	X															
				11		X														
C5.51	C-F-2		2-2201	13	X															
				13		X														
C5.51	C-F-2		2-2201	14	X															
				14		X														
C5.51	C-F-2		2-2201	16	X															
				16		X														
C5.51	C-F-2		2-2201	17	X															
				17		X														
C5.51	C-F-2		2-2201	19	X															
				19		X														
C5.51	C-F-2		2-2201	20	X															
				20		X														
C5.51	C-F-2		2-2201	21	X															
				21		X														
C5.51	C-F-2		2-2201	22	X															
				22		X														
C5.51	C-F-2		2-2201	23	X															
				23		X														
C5.51	C-F-2		2-2201	24	X															
				24		X														

NSBU COMPONENT SURVEILLANCE SCHEDULE
Westinghouse Proprietary

COMPONENT: Circumferential Piping Welds > 3/8 in. Nominal Wall Thickness for Piping > NPS 4

89	89		INT		EXAMINATION METHOD			FIRST INTERVAL			SECOND INTERVAL			THIRD INTERVAL			FOURTH INTERVAL			
ITEM NUMBER	CATEGORY NUMBER	DESCRIPTION	SKETCH NUMBER	IDENT. NUMBER	VOL.	SUR	VIS.	1ST	2ND	3RD	1ST	2ND	3RD	1ST	2ND	3RD	1ST	2ND	3RD	REMARKS
								PERIOD			PERIOD			PERIOD			PERIOD			
C5.51	C-F-2		2-2201	25	X															
				25		X														
C5.51	C-F-2		2-2201	26	X															
				26		X														
C5.51	C-F-2		2-2201	27	X															
				27		X														
C5.51	C-F-2		2-2201	28	X															
				28		X														
C5.51	C-F-2		2-2201	29	X															
				29		X														
C5.51	C-F-2		2-2201	30	X															
				30		X														
C5.51	C-F-2		2-2201	31	X															
				31		X														
C5.51	C-F-2		2-2201	32	X															
				32		X														
C5.51	C-F-2		2-2202	1	X															
				1		X														
C5.51	C-F-2		2-2202	2	X															
				2		X														
C5.51	C-F-2		2-2202	3	X															
				3		X														
C5.51	C-F-2		2-2202	4	X															
				4		X														
C5.51	C-F-2		2-2202	5	X															
				5		X														
C5.51	C-F-2		2-2202	6	X															
				6		X														
C5.51	C-F-2		2-2202	7	X															
				7		X														
C5.51	C-F-2		2-2202	8	X															
				8		X														

NSBU COMPONENT SURVEILLANCE SCHEDULE

Westinghouse Proprietary

COMPONENT: Circumferential Piping Welds ≥ 3/8 in. Nominal Wall Thickness for Piping > NPS 4

89	89		INT		EXAMINATION METHOD			FIRST INTERVAL			SECOND INTERVAL			THIRD INTERVAL			FOURTH INTERVAL			
ITEM NUMBER	CATEGORY NUMBER	DESCRIPTION	SKETCH NUMBER	IDENT. NUMBER	VOL.	SUR	VIS.	1ST	2ND	3RD	1ST	2ND	3RD	1ST	2ND	3RD	1ST	2ND	3RD	REMARKS
								PERIOD			PERIOD			PERIOD			PERIOD			
C5.51	C-F-2		2-2202	9	X															
				9		X														
C5.51	C-F-2		2-2202	10	X															
				10		X														
C5.51	C-F-2		2-2202	11	X															
				11		X														
C5.51	C-F-2		2-2202	12	X															
				12		X														
C5.51	C-F-2		2-2202	13	X															
				13		X														
C5.51	C-F-2		2-2202	14	X															
				14		X														
C5.51	C-F-2		2-2202	15	X															
				15		X														
C5.51	C-F-2		2-2202	16	X															
				16		X														
C5.51	C-F-2		2-2300	1	X															
				1		X														
C5.51	C-F-2		2-2300	2	X															
				2		X														
C5.51	C-F-2		2-2300	3	X															
				3		X														
C5.51	C-F-2		2-2300	5	X															
				5		X														
C5.51	C-F-2		2-2300	6	X															
				6		X														
C5.51	C-F-2		2-2300	7	X															
				7		X														
C5.51	C-F-2		2-2300	8	X															
				8		X														
C5.51	C-F-2		2-2300	9	X										/					
				9		X									/					
C5.51	C-F-2		2-2300	10	X										/					
				10		X									/					

COMPONENT: Circumferential Piping Welds ≥ 3/8 in. Nominal Wall Thickness for Piping > NPS 4

89	89		INT		EXAMINATION METHOD			FIRST INTERVAL			SECOND INTERVAL			THIRD INTERVAL			FOURTH INTERVAL			
ITEM NUMBER	CATEGORY NUMBER	DESCRIPTION	SKETCH NUMBER	IDENT. NUMBER	VOL.	SUR	VIS.	1ST	2ND	3RD	1ST	2ND	3RD	1ST	2ND	3RD	1ST	2ND	3RD	REMARKS
								PERIOD			PERIOD			PERIOD			PERIOD			
C5.51	C-F-2		2-2300	11	X															
				11		X														
C5.51	C-F-2		2-2300	12	X															
				12		X														
C5.51	C-F-2		2-2300	13	X															
				13		X														
C5.51	C-F-2		2-2300	14	X															
				14		X														
C5.51	C-F-2		2-2300	15	X															
				15		X														
C5.51	C-F-2		2-2300	16	X															
				16		X														
C5.51	C-F-2		2-2301	1	X															
				1		X														
C5.51	C-F-2		2-2301	3	X															
				3		X														
C5.51	C-F-2		2-2301	4	X															
				4		X														
C5.51	C-F-2		2-2301	5	X															
				5		X														
C5.51	C-F-2		2-2301	6	X															
				6		X														
C5.51	C-F-2		2-2301	8	X															
				8		X														
C5.51	C-F-2		2-2301	9	X															
				9		X														
C5.51	C-F-2		2-2301	11	X															
				11		X														
C5.51	C-F-2		2-2301	12	X															
				12		X														
C5.51	C-F-2		2-2301	14	X															
				14		X														
C5.51	C-F-2		2-2301	15	X															
				15		X														

NSBU COMPONENT SURVEILLANCE SCHEDULE

COMPONENT: Circumferential Piping Welds > 3/8 in. Nominal Wall Thickness for Piping > NPS 4

89	89		INT		EXAMINATION METHOD			FIRST INTERVAL			SECOND INTERVAL			THIRD INTERVAL			FOURTH INTERVAL			
ITEM NUMBER	CATEGORY NUMBER	DESCRIPTION	SKETCH NUMBER	IDENT. NUMBER	VOL.	SUR	VIS.	1ST	2ND	3RD	1ST	2ND	3RD	1ST	2ND	3RD	1ST	2ND	3RD	REMARKS
								PERIOD			PERIOD			PERIOD			PERIOD			
C5.51	C-F-2		2-2301	17	X															
				17		X														
C5.51	C-F-2		2-2301	18	X															
				18		X														
C5.51	C-F-2		2-2301	20	X															
				20		X														
C5.51	C-F-2		2-2301	21	X															
				21		X														
C5.51	C-F-2		2-2301	23	X															
				23		X														
C5.51	C-F-2		2-2301	24	X															
				24		X														
C5.51	C-F-2		2-2301	25	X															
				25		X														
C5.51	C-F-2		2-2301	26	X															
				26		X														
C5.51	C-F-2		2-2301	27	X															
				27		X														
C5.51	C-F-2		2-2301	28	X															
				28		X														
C5.51	C-F-2		2-2301	29	X															
				29		X														
C5.51	C-F-2		2-2301	30	X															
				30		X														
C5.51	C-F-2		2-2301	31	X															
				31		X														
C5.51	C-F-2		2-2301	32	X															
				32		X														
C5.51	C-F-2		2-2301	33	X															
				33		X														
C5.51	C-F-2		2-2302	1	X															
				1		X														
C5.51	C-F-2		2-2302	2	X															
				2		X														

NSBU COMPONENT SURVEILLANCE SCHEDULE
Westinghouse Proprietary

COMPONENT: Circumferential Piping Welds > 3/8 in. Nominal Wall Thickness for Piping > NPS 4

89	89		INT		EXAMINATION METHOD			FIRST INTERVAL			SECOND INTERVAL			THIRD INTERVAL			FOURTH INTERVAL			
ITEM NUMBER	CATEGORY NUMBER	DESCRIPTION	SKETCH NUMBER	IDENT. NUMBER	VOL.	SUR	VIS.	1ST	2ND	3RD	1ST	2ND	3RD	1ST	2ND	3RD	1ST	2ND	3RD	REMARKS
								PERIOD			PERIOD			PERIOD			PERIOD			
C5.51	C-F-2		2-2302	3	X															
				3		X														
C5.51	C-F-2		2-2302	4	X															
				4		X														
C5.51	C-F-2		2-2302	5	X															
				5		X														
C5.51	C-F-2		2-2302	6	X															
				6		X														
C5.51	C-F-2		2-2302	7	X															
				7		X														
C5.51	C-F-2		2-2302	8	X															
				8		X														
C5.51	C-F-2		2-2302	9	X									/						
				9		X								/						
C5.51	C-F-2		2-2302	10	X									/						
				10		X								/						
C5.51	C-F-2		2-2302	11	X															
				11		X														
C5.51	C-F-2		2-2302	12	X															
				12		X														
C5.51	C-F-2		2-2302	13	X															
				13		X														
C5.51	C-F-2		2-2302	14	X															
				14		X														
C5.51	C-F-2		2-2302	15	X															
				15		X														
C5.51	C-F-2		2-2302	18	X															
				18		X														
C5.51	C-F-2		2-2400	1	X															
				1		X														
C5.51	C-F-2		2-2400	2	X															
				2		X														
C5.51	C-F-2		2-2400	3	X															
				3		X														

NSBU COMPONENT SURVEILLANCE SCHEDULE
Westinghouse Proprietary

COMPONENT: Circumferential Piping Welds > 3/8 in. Nominal Wall Thickness for Piping > NPS 4

89	89		INT		EXAMINATION METHOD			FIRST INTERVAL			SECOND INTERVAL			THIRD INTERVAL			FOURTH INTERVAL			
ITEM NUMBER	CATEGORY NUMBER	DESCRIPTION	SKETCH NUMBER	IDENT. NUMBER	VOL.	SUR	VIS.	1ST	2ND	3RD	1ST	2ND	3RD	1ST	2ND	3RD	1ST	2ND	3RD	REMARKS
								PERIOD			PERIOD			PERIOD			PERIOD			
C5.51	C-F-2		2-2400	5	X															
				5		X														
C5.51	C-F-2		2-2400	6	X															
				6		X														
C5.51	C-F-2		2-2400	7	X															
				7		X														
C5.51	C-F-2		2-2400	8	X															
				8		X														
C5.51	C-F-2		2-2400	9	X															
				9		X														
C5.51	C-F-2		2-2400	10	X															
				10		X														
C5.51	C-F-2		2-2400	11	X															
				11		X														
C5.51	C-F-2		2-2400	12	X															
				12		X														
C5.51	C-F-2		2-2400	13	X															
				13		X									/					
C5.51	C-F-2		2-2400	14	X										/					
				14		X														
C5.51	C-F-2		2-2401	1	X															
				1		X														
C5.51	C-F-2		2-2401	2	X															
				2		X														
C5.51	C-F-2		2-2401	4	X															
				4		X														
C5.51	C-F-2		2-2401	5	X															
				5		X														
C5.51	C-F-2		2-2401	7	X															
				7		X														
C5.51	C-F-2		2-2401	8	X															
				8		X														
C5.51	C-F-2		2-2401	10	X															
				10		X														

NSBU COMPONENT SURVEILLANCE SCHEDULE
Westinghouse Proprietary

COMPONENT: Circumferential Piping Welds > 3/8 in. Nominal Wall Thickness for Piping > NPS 4

89	89		INT		EXAMINATION METHOD			FIRST INTERVAL			SECOND INTERVAL			THIRD INTERVAL			FOURTH INTERVAL			
ITEM NUMBER	CATEGORY NUMBER	DESCRIPTION	SKETCH NUMBER	IDENT. NUMBER	VOL.	SUR	VIS.	1ST	2ND	3RD	1ST	2ND	3RD	1ST	2ND	3RD	1ST	2ND	3RD	REMARKS
								PERIOD			PERIOD			PERIOD			PERIOD			
C5.51	C-F-2		2-2401	11	X															
				11		X														
C5.51	C-F-2		2-2401	13	X															
				13		X														
C5.51	C-F-2		2-2401	14	X															
				14		X														
C5.51	C-F-2		2-2401	16	X															
				16		X														
C5.51	C-F-2		2-2401	17	X															
				17		X														
C5.51	C-F-2		2-2401	19	X															
				19		X														
C5.51	C-F-2		2-2401	20	X															
				20		X														
C5.51	C-F-2		2-2401	21	X															
				21		X														
C5.51	C-F-2		2-2401	22	X															
				22		X														
C5.51	C-F-2		2-2401	23	X															
				23		X														
C5.51	C-F-2		2-2401	24	X															
				24		X														
C5.51	C-F-2		2-2401	25	X															
				25		X														
C5.51	C-F-2		2-2401	26	X															
				26		X														
C5.51	C-F-2		2-2401	27	X															
				27		X														
C5.51	C-F-2		2-2401	28	X															
				28		X														
C5.51	C-F-2		2-2401	29	X															
				29		X														
C5.51	C-F-2		2-2401	30	X															
				30		X														

NSBU COMPONENT SURVEILLANCE SCHEDULE

Westinghouse Proprietary

COMPONENT: Circumferential Piping Welds ≥ 3/8 in. Nominal Wall Thickness for Piping > NPS 4

89	89		INT		EXAMINATION METHOD			FIRST INTERVAL			SECOND INTERVAL			THIRD INTERVAL			FOURTH INTERVAL			
ITEM NUMBER	CATEGORY NUMBER	DESCRIPTION	SKETCH NUMBER	IDENT. NUMBER	VOL.	SUR	VIS.	1ST	2ND	3RD	1ST	2ND	3RD	1ST	2ND	3RD	1ST	2ND	3RD	REMARKS
								PERIOD			PERIOD			PERIOD			PERIOD			
C5.51	C-F-2		2-2401	31	X															
				31		X														
C5.51	C-F-2		2-2402	1	X															
				1		X														
C5.51	C-F-2		2-2402	2	X											/				
				2		X										/				
C5.51	C-F-2		2-2402	3	X											/				
				3		X										/				
C5.51	C-F-2		2-2402	4	X											/				
				4		X										/				
C5.51	C-F-2		2-2402	6	X															
				6		X														
C5.51	C-F-2		2-2402	7	X															
				7		X														
C5.51	C-F-2		2-2402	9	X															
				9		X														
C5.51	C-F-2		2-2402	10	X															
				10		X														
C5.51	C-F-2		2-2402	11	X															
				11		X														
C5.51	C-F-2		2-2402	12	X															
				12		X														
C5.51	C-F-2		2-2402	13	X															
				13		X														
C5.51	C-F-2		2-2402	14	X															
				14		X														
C5.51	C-F-2		2-2402	15	X															
				15		X														
C5.51	C-F-2		2-2402	16	X															
				16		X														
C5.51	C-F-2		2-2402	17	X															
				17		X														
C5.51	C-F-2		2-2402	18	X															
				18		X														

NSBU COMPONENT SURVEILLANCE SCHEDULE
Westinghouse Proprietary

COMPONENT: Circumferential Piping Welds > 3/8 in. Nominal Wall Thickness for Piping > NPS 4

89	89		INT		EXAMINATION METHOD			FIRST INTERVAL			SECOND INTERVAL			THIRD INTERVAL			FOURTH INTERVAL			
ITEM NUMBER	CATEGORY NUMBER	DESCRIPTION	SKETCH NUMBER	IDENT. NUMBER	VOL.	SUR	VIS.	1ST	2ND	3RD	1ST	2ND	3RD	1ST	2ND	3RD	1ST	2ND	3RD	REMARKS
								PERIOD			PERIOD			PERIOD			PERIOD			
C5.51	C-F-2		2-2402	19	X															
				19		X														
C5.51	C-F-2		2-2402	20	X															
				20		X														
C5.51	C-F-2		2-2402	21	X															
				21		X														
TOTAL ID'S FOR C5.51				222	222	222	0	TOTAL SCHEDULED						10	14	10				
								TOTAL COMPLETED						0	0	0				

NSBU COMPONENT SURVEILLANCE SCHEDULE
Westinghouse Proprietary

COMPONENT: Longitudinal Piping Welds ≥ 3/8 in. Nominal Wall Thickness for > NPS 4

89	89		INT		EXAMINATION METHOD			FIRST INTERVAL			SECOND INTERVAL			THIRD INTERVAL			FOURTH INTERVAL			
ITEM NUMBER	CATEGORY NUMBER	DESCRIPTION	SKETCH NUMBER	IDENT. NUMBER	VOL.	SUR	VIS.	1ST	2ND	3RD	1ST	2ND	3RD	1ST	2ND	3RD	1ST	2ND	3RD	REMARKS
								PERIOD			PERIOD			PERIOD			PERIOD			
C5.52	C-F-2		2-2101	36LS	X															REFERENCE TABLE 4.0
				36LS		X														Code Case
C5.52	C-F-2		2-2101	37LS	X															N-524 Applies
				37LS		X														
C5.52	C-F-2		2-2300	17LS	X															
				17LS		X														
C5.52	C-F-2		2-2300	18LS	X										/					
				18LS		X									/					
TOTAL ID'S FOR C5.52				4	4	4	0	TOTAL SCHEDULED						0	2	0				
								TOTAL COMPLETED						0	0	0				

NSBU COMPONENT SURVEILLANCE SCHEDULE
Westinghouse Proprietary

COMPONENT: Pipe Branch Connections of Branch Piping ≥ NPS 2 Circumferential Welds

89	89		INT		EXAMINATION METHOD			FIRST INTERVAL			SECOND INTERVAL			THIRD INTERVAL			FOURTH INTERVAL			
ITEM NUMBER	CATEGORY NUMBER	DESCRIPTION	SKETCH NUMBER	IDENT. NUMBER	VOL.	SUR	VIS.	1ST	2ND	3RD	1ST	2ND	3RD	1ST	2ND	3RD	1ST	2ND	3RD	REMARKS
								PERIOD			PERIOD			PERIOD			PERIOD			
C5.81	C-F-2		2-2101	2(BC)		X								/						
C5.81	C-F-2		2-2101	7(BC)		X														
C5.81	C-F-2		2-2101	10(BC)		X														
C5.81	C-F-2		2-2101	13(BC)		X														
C5.81	C-F-2		2-2101	16(BC)		X														
C5.81	C-F-2		2-2101	19(BC)		X														
C5.81	C-F-2		2-2101	22(BC)		X									/					
C5.81	C-F-2		2-2201	3(BC)		X														
C5.81	C-F-2		2-2201	6(BC)		X														
C5.81	C-F-2		2-2201	9(BC)		X														
C5.81	C-F-2		2-2201	12(BC)		X														
C5.81	C-F-2		2-2201	15(BC)		X														
C5.81	C-F-2		2-2201	18(BC)		X														
C5.81	C-F-2		2-2201	27(BC)		X														
C5.81	C-F-2		2-2301	2(BC)		X														
C5.81	C-F-2		2-2301	7(BC)		X														
C5.81	C-F-2		2-2301	10(BC)		X														
C5.81	C-F-2		2-2301	13(BC)		X														
C5.81	C-F-2		2-2301	16(BC)		X														
C5.81	C-F-2		2-2301	19(BC)		X														
C5.81	C-F-2		2-2301	22(BC)		X														
C5.81	C-F-2		2-2401	3(BC)		X														
C5.81	C-F-2		2-2401	6(BC)		X														
C5.81	C-F-2		2-2401	9(BC)		X														
C5.81	C-F-2		2-2401	12(BC)		X														
C5.81	C-F-2		2-2401	15(BC)		X														
C5.81	C-F-2		2-2401	18(BC)		X														
C5.81	C-F-2		2-2401	27(BC)		X														
TOTAL ID'S FOR C5.81				28	0	28	0	TOTAL SCHEDULED						1	1	0				
								TOTAL COMPLETED						0	0	0				

NSBU COMPONENT SURVEILLANCE SCHEDULE

COMPONENT: PRESSURE VESSEL PRESSURE RETAINING COMPONENTS

89	89			INT	EXAMINATION METHOD			FIRST INTERVAL			SECOND INTERVAL			THIRD INTERVAL			FOURTH INTERVAL			
ITEM NUMBER	CATEGORY NUMBER	DESCRIPTION	SKETCH NUMBER	IDENT. NUMBER	VOL.	SUR	VIS.	1ST	2ND	3RD	1ST	2ND	3RD	1ST	2ND	3RD	1ST	2ND	3RD	REMARKS
								PERIOD			PERIOD			PERIOD			PERIOD			
C7.10	C-H		2-9100	Reference IWC-5000			X							/	/	/				VT-2. REF. TABLE 4.0
TOTAL ID'S FOR C7.10				1	0	0	1	TOTAL SCHEDULED						1	1	1				
								TOTAL COMPLETED						0	0	0				

NSBU COMPONENT SURVEILLANCE SCHEDULE
Westinghouse Proprietary

COMPONENT: PRESSURE VESSEL PRESSURE RETAINING COMPONENTS

89	89		INT		EXAMINATION METHOD			FIRST INTERVAL			SECOND INTERVAL			THIRD INTERVAL			FOURTH INTERVAL			
ITEM NUMBER	CATEGORY NUMBER	DESCRIPTION	SKETCH NUMBER	IDENT. NUMBER	VOL.	SUR	VIS.	1ST	2ND	3RD	1ST	2ND	3RD	1ST	2ND	3RD	1ST	2ND	3RD	REMARKS
								PERIOD			PERIOD			PERIOD			PERIOD			
C7.20	C-H		2-9600	Reference IWC-5000			X									/				VT-2. REF. TABLE 4.0
																				Code Case N-498-1 Applies
TOTAL ID'S FOR C7.20				1	0	0	1	TOTAL SCHEDULED						0	0	1				
								TOTAL COMPLETED						0	0	0				

NSBU COMPONENT SURVEILLANCE SCHEDULE
Westinghouse Proprietary

COMPONENT: PIPING PRESSURE RETAINING COMPONENTS

89	89		INT		EXAMINATION METHOD			FIRST INTERVAL			SECOND INTERVAL			THIRD INTERVAL			FOURTH INTERVAL			
ITEM NUMBER	CATEGORY NUMBER	DESCRIPTION	SKETCH NUMBER	IDENT. NUMBER	VOL.	SUR	VIS.	1ST	2ND	3RD	1ST	2ND	3RD	1ST	2ND	3RD	1ST	2ND	3RD	REMARKS
								PERIOD			PERIOD			PERIOD			PERIOD			
C7.30	C-H		2-9100	Reference IWC-5000			X							/	/	/				VT-2. REF. TABLE 4.0
TOTAL ID'S FOR C7.30				1	0	0	1	TOTAL SCHEDULED						1	1	1				
								TOTAL COMPLETED						0	0	0				

NSBU COMPONENT SURVEILLANCE SCHEDULE
Westinghouse Proprietary

COMPONENT: PIPING PRESSURE RETAINING COMPONENTS

89	89		INT		EXAMINATION METHOD			FIRST INTERVAL			SECOND INTERVAL			THIRD INTERVAL			FOURTH INTERVAL			
ITEM NUMBER	CATEGORY NUMBER	DESCRIPTION	SKETCH NUMBER	IDENT. NUMBER	VOL.	SUR	VIS.	1ST	2ND	3RD	1ST	2ND	3RD	1ST	2ND	3RD	1ST	2ND	3RD	REMARKS
								PERIOD			PERIOD			PERIOD			PERIOD			
C7.40	C-H		2-9600	Reference IWC-5000			X									/				VT-2. REF. TABLE 4.0
																				Code Case N-498-1 Applies
TOTAL ID'S FOR C7.40				1	0	0	1	TOTAL SCHEDULED						0	0	1				
								TOTAL COMPLETED						0	0	0				

NSBU COMPONENT SURVEILLANCE SCHEDULE

COMPONENT: PUMPS PRESSURE RETAINING COMPONENTS

89	89		INT		EXAMINATION METHOD			FIRST INTERVAL			SECOND INTERVAL			THIRD INTERVAL			FOURTH INTERVAL			
ITEM NUMBER	CATEGORY NUMBER	DESCRIPTION	SKETCH NUMBER	IDENT. NUMBER	VOL.	SUR	VIS.	1ST	2ND	3RD	1ST	2ND	3RD	1ST	2ND	3RD	1ST	2ND	3RD	REMARKS
								PERIOD			PERIOD			PERIOD			PERIOD			
C7.50	C-H		2-9100	Reference IWC-5000			X							/	/	/				VT-2. REF. TABLE 4.0
TOTAL ID'S FOR C7.50				1	0	0	1	TOTAL SCHEDULED						1	1	1				
								TOTAL COMPLETED						0	0	0				

NSBU COMPONENT SURVEILLANCE SCHEDULE
Westinghouse Proprietary

COMPONENT: PUMPS PRESSURE RETAINING COMPONENTS

89	89		INT		EXAMINATION METHOD			FIRST INTERVAL			SECOND INTERVAL			THIRD INTERVAL			FOURTH INTERVAL			
ITEM NUMBER	CATEGORY NUMBER	DESCRIPTION	SKETCH NUMBER	IDENT. NUMBER	VOL.	SUR	VIS.	1ST	2ND	3RD	1ST	2ND	3RD	1ST	2ND	3RD	1ST	2ND	3RD	REMARKS
								PERIOD			PERIOD			PERIOD			PERIOD			
C7.60	C-H		2-9600	Reference IWC-5000			X									/				VT-2. REF. TABLE 4.0
																				Code Case N-498-1 Applies
TOTAL ID'S FOR C7.60				1	0	0	1	TOTAL SCHEDULED						0	0	1				
								TOTAL COMPLETED						0	0	0				

NSBU COMPONENT SURVEILLANCE SCHEDULE
Westinghouse Proprietary

COMPONENT: VALVES PRESSURE RETAINING COMPONENTS

89	89		INT		EXAMINATION METHOD			FIRST INTERVAL			SECOND INTERVAL			THIRD INTERVAL			FOURTH INTERVAL			
ITEM NUMBER	CATEGORY NUMBER	DESCRIPTION	SKETCH NUMBER	IDENT. NUMBER	VOL.	SUR	VIS.	1ST	2ND	3RD	1ST	2ND	3RD	1ST	2ND	3RD	1ST	2ND	3RD	REMARKS
								PERIOD			PERIOD			PERIOD			PERIOD			
C7.70	C-H		2-9100	Reference IWC-5000			X							/	/	/				VT-2. REF. TABLE 4.0
TOTAL ID'S FOR C7.70				1	0	0	1	TOTAL SCHEDULED						1	1	1				
								TOTAL COMPLETED						0	0	0				

NSBU COMPONENT SURVEILLANCE SCHEDULE
Westinghouse Proprietary

COMPONENT: VALVES PRESSURE RETAINING COMPONENTS

89	89		INT		EXAMINATION METHOD			FIRST INTERVAL			SECOND INTERVAL			THIRD INTERVAL			FOURTH INTERVAL			
ITEM NUMBER	CATEGORY NUMBER	DESCRIPTION	SKETCH NUMBER	IDENT. NUMBER	VOL.	SUR	VIS.	1ST	2ND	3RD	1ST	2ND	3RD	1ST	2ND	3RD	1ST	2ND	3RD	REMARKS
								PERIOD			PERIOD			PERIOD			PERIOD			
C7.80	C-H		2-9600	Reference IWC-5000			X									/				VT-2. REF. TABLE 4.0
																				Code Case N-498-1 Applies
TOTAL ID'S FOR C7.80				1	0	0	1	TOTAL SCHEDULED						0	0	1				
								TOTAL COMPLETED						0	0	0				

NSBU COMPONENT SURVEILLANCE SCHEDULE
Westinghouse Proprietary

COMPONENT: *** CLASS TOTALS FOR IWC ***

89	89		INT		EXAMINATION METHOD			FIRST INTERVAL			SECOND INTERVAL			THIRD INTERVAL			FOURTH INTERVAL			
ITEM NUMBER	CATEGORY NUMBER	DESCRIPTION	SKETCH NUMBER	IDENT. NUMBER	VOL.	SUR	VIS.	1ST	2ND	3RD	1ST	2ND	3RD	1ST	2ND	3RD	1ST	2ND	3RD	REMARKS
								PERIOD			PERIOD			PERIOD			PERIOD			
								TOTAL SCHEDULED						76	74	71				
CLASS TOTALS				1164	782	883	12	TOTAL COMPLETED						0	0	0				

NSBU COMPONENT SURVEILLANCE SCHEDULE
Westinghouse Proprietary

COMPONENT:

89	89		INT		EXAMINATION METHOD			FIRST INTERVAL			SECOND INTERVAL			THIRD INTERVAL			FOURTH INTERVAL			
ITEM NUMBER	CATEGORY NUMBER	DESCRIPTION	SKETCH NUMBER	IDENT. NUMBER	VOL.	SUR	VIS.	1ST	2ND	3RD	1ST	2ND	3RD	1ST	2ND	3RD	1ST	2ND	3RD	REMARKS
								PERIOD			PERIOD			PERIOD			PERIOD			
TOTAL ID'S FOR				0	0	0	0	TOTAL SCHEDULED						0	0	0				
								TOTAL COMPLETED						0	0	0				

This Page Intentionally Left Blank

NSBU COMPONENT SURVEILLANCE SCHEDULE

COMPONENT: INTEGRAL ATTACHMENTS FOR CLASS 3 VESSELS

89	89		INT		EXAMINATION METHOD			FIRST INTERVAL			SECOND INTERVAL			THIRD INTERVAL			FOURTH INTERVAL			
ITEM NUMBER	CATEGORY NUMBER	DESCRIPTION	SKETCH NUMBER	IDENT. NUMBER	VOL.	SUR	VIS.	1ST	2ND	3RD	1ST	2ND	3RD	1ST	2ND	3RD	1ST	2ND	3RD	REMARKS
								PERIOD			PERIOD			PERIOD			PERIOD			
D1.10	D-A		3-1100	31 SUPPORT			X								/					REFERENCE TABLE 4.0
D1.10	D-A		3-1100	32 SUPPORT			X													VT-1, CODE CASE 509
																				APPLIES
D1.10	D-A		3-1110	31 SUPPORT			X									/				
D1.10	D-A		3-1120	31 SUPPORT			X							/						
D1.10	D-A		3-1130	31 SUPPORT			X								/					
D1.10	D-A		3-1140	31 SUPPORT			X								/					
D1.10	D-A		3-1140	32 SUPPORT			X													
D1.10	D-A		3-1150	31 SUPPORT			X								/					
D1.10	D-A		3-1160	31-JWC SUPPORT			X							/						
D1.10	D-A		3-1160	31-LOC SUPPORT			X							/						
D1.10	D-A		3-1160	32-JWC SUPPORT			X													
D1.10	D-A		3-1160	32-LOC SUPPORT			X													
D1.10	D-A		3-1160	33-JWC SUPPORT			X													
D1.10	D-A		3-1160	33-LOC SUPPORT			X													
D1.10	D-A		3-1180	31 SUPPORT			X									/				
D1.10	D-A		3-1180	32 SUPPORT			X													
D1.10	D-A		3-1500	31 SUPPORT			X							/						
D1.10	D-A		3-1500	32 SUPPORT			X													
D1.10	D-A		3-1500	33 SUPPORT			X													
D1.10	D-A		3-1510	34 SUPPORT			X													
D1.10	D-A		3-1510	35 SUPPORT			X													
D1.10	D-A		3-4180	34 SUPPORT			X									/				
D1.10	D-A		3-4180	35 SUPPORT			X													
D1.10	D-A		3-4180	36 SUPPORT			X													

NSBU COMPONENT SURVEILLANCE SCHEDULE

Westinghouse Proprietary

COMPONENT: INTEGRAL ATTACHMENTS FOR CLASS 3 VESSELS

89	89		INT		EXAMINATION METHOD			FIRST INTERVAL			SECOND INTERVAL			THIRD INTERVAL			FOURTH INTERVAL			
ITEM NUMBER	CATEGORY NUMBER	DESCRIPTION	SKETCH NUMBER	IDENT. NUMBER	VOL.	SUR	VIS.	1ST	2ND	3RD	1ST	2ND	3RD	1ST	2ND	3RD	1ST	2ND	3RD	REMARKS
								PERIOD			PERIOD			PERIOD			PERIOD			
D1.10	D-A		3-4190	31 SUPPORT			X									/				
D1.10	D-A		3-4190	32 SUPPORT			X													
D1.10	D-A		3-4190	33 SUPPORT			X													
								TOTAL SCHEDULED						4	4	4				
TOTAL ID'S FOR D1.10				27	0	0	27	TOTAL COMPLETED						0	0	0				

NSBU COMPONENT SURVEILLANCE SCHEDULE
Westinghouse Proprietary

COMPONENT: PRESSURE RETAINING COMPONENTS

89	89		INT		EXAMINATION METHOD			FIRST INTERVAL			SECOND INTERVAL			THIRD INTERVAL			FOURTH INTERVAL			
ITEM NUMBER	CATEGORY NUMBER	DESCRIPTION	SKETCH NUMBER	IDENT. NUMBER	VOL.	SUR	VIS.	1ST	2ND	3RD	1ST	2ND	3RD	1ST	2ND	3RD	1ST	2ND	3RD	REMARKS
								PERIOD			PERIOD			PERIOD			PERIOD			
D1.10	D-A		3-9100	11 LEAK			X							/	/	/				VT-2, REF. TABLE 4.0
D1.10	D-A		3-9600	11 HYDRO			X									/				Code Cas N-498-1 Applies
TOTAL ID'S FOR D1.10				2	0	0	2	TOTAL SCHEDULED						1	1	2				
								TOTAL COMPLETED						0	0	0				

NSBU COMPONENT SURVEILLANCE SCHEDULE
Westinghouse Proprietary

COMPONENT: INTEGRAL ATTACHMENTS FOR CLASS 3 PIPING

89	89		INT		EXAMINATION METHOD			FIRST INTERVAL			SECOND INTERVAL			THIRD INTERVAL			FOURTH INTERVAL			
ITEM NUMBER	CATEGORY NUMBER	DESCRIPTION	SKETCH NUMBER	IDENT. NUMBER	VOL.	SUR	VIS.	1ST	2ND	3RD	1ST	2ND	3RD	1ST	2ND	3RD	1ST	2ND	3RD	REMARKS
								PERIOD			PERIOD			PERIOD			PERIOD			
D1.20	D-A		3-3401	SWN-A-1084-2			X													VT-1, REF. TABLE 4.0
D1.20	D-A		3-3401	SWN-A-199			X													CODE CASE 590
D1.20	D-A		3-3401	SWN-A-199			X													APPLIES
D1.20	D-A		3-3402	SWN-A-199			X								/					
D1.20	D-A		3-3403	SWN-A-197			X													
D1.20	D-A		3-3407	SWN-A-561			X													
D1.20	D-A		3-3409	SW-H-79			X													
D1.20	D-A		3-3409	SW-H-85A			X													
D1.20	D-A		3-3409	SW-H&R-83			X													
D1.20	D-A		3-3409	SW-H&R-87			X													
D1.20	D-A		3-3409	M/S-11E-40-SW-H&R-12E			X													
D1.20	D-A		3-3409	SW-HR12E-1			X													
D1.20	D-A		3-3409	SWH&R12E-5			X													
D1.20	D-A		3-3410	M/S-12A-32-SW-H-12B			X													
D1.20	D-A		3-3410	M/S-12A-33-SW-H&R-12B			X													
D1.20	D-A		3-3410	M/S-12A-34-SW-H-12B			X													
D1.20	D-A		3-3410	M/S-12A-35-SW-H&R-12B			X													
D1.20	D-A		3-3410	M/S-12A-36-SW-H-12C			X													
D1.20	D-A		3-3410	M/S-12A-38-SW-H-12C			X													
D1.20	D-A		3-3410	M/S-12A-32-SW-H-12C			X													
D1.20	D-A		3-3410	M/S-12A-33-SW-H&R-12C			X													
D1.20	D-A		3-3410	M/S-12A-34-SW-H-12C			X													
D1.20	D-A		3-3410	M/S-12A-35-SW-H&R-12C			X													
D1.20	D-A		3-3410	SW-H-12C-14			X													
D1.20	D-A		3-3410	SW-H&R-12B-12			X									/				
D1.20	D-A		3-3410	SW-R-12C-17			X													
D1.20	D-A		3-3410	M/S-12A-36-SW-H-12C			X													
D1.20	D-A		3-3410	M/S-12A-38-SW-H-12C			X													
D1.20	D-A		3-3410	M/S-12A-39-SW-R-12C			X													

NSBU COMPONENT SURVEILLANCE SCHEDULE
Westinghouse Proprietary

COMPONENT: INTEGRAL ATTACHMENTS FOR CLASS 3 PIPING

89	89		INT		EXAMINATION METHOD			FIRST INTERVAL			SECOND INTERVAL			THIRD INTERVAL			FOURTH INTERVAL			
ITEM NUMBER	CATEGORY NUMBER	DESCRIPTION	SKETCH NUMBER	IDENT. NUMBER	VOL.	SUR	VIS.	1ST	2ND	3RD	1ST	2ND	3RD	1ST	2ND	3RD	1ST	2ND	3RD	REMARKS
								PERIOD			PERIOD			PERIOD			PERIOD			
D1.20	D-A		3-3411	SW-H-43			X								/					
D1.20	D-A		3-3411	M/S-12A-32-SW-H-11A			X													
D1.20	D-A		3-3411	M/S-12A-33-SW-H&R-11A			X													
D1.20	D-A		3-3411	M/S-12A-34-SW-H-11A			X													
D1.20	D-A		3-3411	M/S-12A-35-SW-H&R-11A			X													
D1.20	D-A		3-3411	SW-H-12A-34			X													
D1.20	D-A		3-3411	SW-H-12A-35			X													
D1.20	D-A		3-3411	SW-H-12A-36			X													
D1.20	D-A		3-3411	SW-H-12A-38			X													
D1.20	D-A		3-3411	SW-H&R-12A-9			X													
D1.20	D-A		3-3411	SW-H-12A-32			X													
D1.20	D-A		3-3411	SW-H&R-12A-33			X													
D1.20	D-A		3-3411	SW-H&R-12A-39			X													
D1.20	D-A		3-3412	SW-H-89			X								/					
D1.20	D-A		3-3412	SW-H&R-91			X								/					
D1.20	D-A		3-3412	M/S-12A-32-SW-H-11B			X													
D1.20	D-A		3-3412	M/S-12A-33-SW-H&R-11B			X													
D1.20	D-A		3-3412	M/S-12A-34-SW-H-11B			X													
D1.20	D-A		3-3412	M/S-12A-35-SW-H&R-11B			X													
D1.20	D-A		3-3412	M/S-12A-36-SW-H-11B			X													
D1.20	D-A		3-3412	M/S-12A-37-SW-H&R-11B			X													
D1.20	D-A		3-3412	M/S-12A-38-SW-H-11B			X													
D1.20	D-A		3-3412	M/S-12A-39-SW-H&R-11B			X													
D1.20	D-A		3-3413	SW-H-35			X							/						
D1.20	D-A		3-3413	SW-H-40			X													
D1.20	D-A		3-3413	SW-H-41A			X													
D1.20	D-A		3-3413	SW-H-42A			X													
D1.20	D-A		3-3413	M/S-12E-1-SW-H&R-11E			X													
D1.20	D-A		3-3413	SW-H&R-39			X													
D1.20	D-A		3-3413	SW-H&R-11E-31			X													
D1.20	D-A		3-3413	SW-H&R-11E-40			X													

NSBU COMPONENT SURVEILLANCE SCHEDULE
Westinghouse Proprietary

COMPONENT: INTEGRAL ATTACHMENTS FOR CLASS 3 PIPING

89	89		INT		EXAMINATION METHOD			FIRST INTERVAL			SECOND INTERVAL			THIRD INTERVAL			FOURTH INTERVAL			
ITEM NUMBER	CATEGORY NUMBER	DESCRIPTION	SKETCH NUMBER	IDENT. NUMBER	VOL.	SUR	VIS.	1ST	2ND	3RD	1ST	2ND	3RD	1ST	2ND	3RD	1ST	2ND	3RD	REMARKS
								PERIOD			PERIOD			PERIOD			PERIOD			
D1.20	D-A		3-3414	SW-H-19			X							/						
D1.20	D-A		3-3414	M/S-12A-32-SW-H-11C			X													
D1.20	D-A		3-3414	M/S-12A-33-SW-H&R-11C			X													
D1.20	D-A		3-3414	M/S-12A-34-SW-H-11C			X													
D1.20	D-A		3-3414	M/S-12A-35-SW-H&R-11C			X													
D1.20	D-A		3-3414	M/S-12A-36-SW-H-11C			X													
D1.20	D-A		3-3414	M/S-12A-37-SW-H&R-11C			X													
D1.20	D-A		3-3414	M/S-12A-38-SW-H-11C			X													
D1.20	D-A		3-3414	M/S-12A-39-SW-H&R-11C			X													
D1.20	D-A		3-3414	M/S-12C-14-SW-H&R-11C			X													
D1.20	D-A		3-3414	SW-H&R-11C-27			X													
D1.20	D-A		3-3500	AC-H&R-519			X									/				
D1.20	D-A		3-3500	AC-H&R-523			X													
D1.20	D-A		3-3500	AC-H&R-524			X									/				
D1.20	D-A		3-3500	AC-H&R-528			X													
D1.20	D-A		3-3500	AC-H&R-532			X													
D1.20	D-A		3-3501	AC-H-542			X													
D1.20	D-A		3-3501	AC-H-544			X													
D1.20	D-A		3-3504	AC-H-52-4			X													
D1.20	D-A		3-3504	AC-HR-52-5			X													
D1.20	D-A		3-3504	AC-HR-52-6			X													
D1.20	D-A		3-3504	AC-HR-52-3			X													
D1.20	D-A		3-3508	AC-A53-17C			X													
D1.20	D-A		3-3509	M/S-13-3B-AC-H-14			X													
D1.20	D-A		3-3509	AC-H-13-3B			X							/						
D1.20	D-A		3-3601	AC-H&R-329-4			X													
D1.20	D-A		3-3601	AC-HR-329-9			X													

NSBU COMPONENT SURVEILLANCE SCHEDULE
Westinghouse Proprietary

COMPONENT: INTEGRAL ATTACHMENTS FOR CLASS 3 PIPING

89	89		INT		EXAMINATION METHOD			FIRST INTERVAL			SECOND INTERVAL			THIRD INTERVAL			FOURTH INTERVAL			
ITEM NUMBER	CATEGORY NUMBER	DESCRIPTION	SKETCH NUMBER	IDENT. NUMBER	VOL.	SUR	VIS.	1ST	2ND	3RD	1ST	2ND	3RD	1ST	2ND	3RD	1ST	2ND	3RD	REMARKS
								PERIOD			PERIOD			PERIOD			PERIOD			
D1.20	D-A		3-3700	CT-H-1071-1			X													
D1.20	D-A		3-3700	CT-H-1071-4			X													
D1.20	D-A		3-3700	CT-H-1071-7			X													
D1.20	D-A		3-3701	CT-H-1072-5			X									/				
D1.20	D-A		3-3701	CT-H-1073-5			X													
D1.20	D-A		3-3701	CT-H&R-1072-1			X													
D1.20	D-A		3-3701	CT-H&R-1073-1			X													
D1.20	D-A		3-3702	V-A-1016-1			X													
D1.20	D-A		3-3702	V-A-1017-2			X													
D1.20	D-A		3-3703	BF-H-1003-1A			X													
D1.20	D-A		3-3703	BF-H-1005-1A			X							/						
D1.20	D-A		3-3705	BF-H-1001-1B			X													
TOTAL ID'S FOR D1.20				96	0	0	96	TOTAL SCHEDULED						4	4	4				
								TOTAL COMPLETED						0	0	0				

NSBU COMPONENT SURVEILLANCE SCHEDULE
Westinghouse Proprietary

COMPONENT: PRESSURE RETAINING PIPING

89	89		INT		EXAMINATION METHOD			FIRST INTERVAL			SECOND INTERVAL			THIRD INTERVAL			FOURTH INTERVAL			
ITEM NUMBER	CATEGORY NUMBER	DESCRIPTION	SKETCH NUMBER	IDENT. NUMBER	VOL.	SUR	VIS.	1ST	2ND	3RD	1ST	2ND	3RD	1ST	2ND	3RD	1ST	2ND	3RD	REMARKS
								PERIOD			PERIOD			PERIOD			PERIOD			
D1.20	D-A		3-9100	11 LEAK			X							/	/	/				VT-2. REF. TABLE 4.0
D1.20	D-A		3-9600	11 HYDRO			X									/				Code Case N-498-1 Applies
TOTAL ID'S FOR D1.20				2	0	0	2	TOTAL SCHEDULED						1	1	2				
								TOTAL COMPLETED						0	0	0				

NSBU COMPONENT SURVEILLANCE SCHEDULE
Westinghouse Proprietary

COMPONENT: INTEGRAL ATTACHMENTS FOR CLASS 3 PUMPS

89	89		INT		EXAMINATION METHOD			FIRST INTERVAL			SECOND INTERVAL			THIRD INTERVAL			FOURTH INTERVAL			
ITEM NUMBER	CATEGORY NUMBER	DESCRIPTION	SKETCH NUMBER	IDENT. NUMBER	VOL.	SUR	VIS.	1ST	2ND	3RD	1ST	2ND	3RD	1ST	2ND	3RD	1ST	2ND	3RD	REMARKS
								PERIOD			PERIOD			PERIOD			PERIOD			
D1.30	D-A		3-1170	31 SUPPORT			X							/						REFERENCE TABLE 4.0
D1.30	D-A		3-1170	32 SUPPORT			X													VT-1, CODE CASE N-509
D1.30	D-A		3-1170	33 SUPPORT			X													APPLIES
D1.30	D-A		3-1170	34 SUPPORT			X													
D1.30	D-A		3-1190	31 SH Hx SUPPORT			X								/					
D1.30	D-A		3-1190	32 SH Hx SUPPORT			X													
D1.30	D-A		3-1520	31 SUPPORT			X							/						
D1.30	D-A		3-1520	32 SUPPORT			X													
D1.30	D-A		3-1520	33 SUPPORT			X													
D1.30	D-A		3-1530	31 SUPPORT			X									/				
D1.30	D-A		3-1530	32 SUPPORT			X													
D1.30	D-A		3-1530	33 SUPPORT			X													
D1.30	D-A		3-1540	31 SUPPORT			X								/					
D1.30	D-A		3-1540	32 SUPPORT			X													
D1.30	D-A		3-4100	34 SUPPORT			X									/				
D1.30	D-A		3-4100	35 SUPPORT			X													
D1.30	D-A		3-4100	36 SUPPORT			X													
D1.30	D-A		3-4110	31 SUPPORT			X									/				
D1.30	D-A		3-4110	32 SUPPORT			X													
D1.30	D-A		3-4110	33 SUPPORT			X													
D1.30	D-A		3-4120	31 SUPPORT			X									/				
D1.30	D-A		3-4120	32 SUPPORT			X													
D1.30	D-A		3-4130	31 SUPPORT			X							/						
D1.30	D-A		3-4130	32 SUPPORT			X													
D1.30	D-A		3-4130	33 SUPPORT			X													

NSBU COMPONENT SURVEILLANCE SCHEDULE
Westinghouse Proprietary

COMPONENT: INTEGRAL ATTACHMENTS FOR CLASS 3 PUMPS

89	89		INT		EXAMINATION METHOD			FIRST INTERVAL			SECOND INTERVAL			THIRD INTERVAL			FOURTH INTERVAL			
ITEM NUMBER	CATEGORY NUMBER	DESCRIPTION	SKETCH NUMBER	IDENT. NUMBER	VOL.	SUR	VIS.	1ST	2ND	3RD	1ST	2ND	3RD	1ST	2ND	3RD	1ST	2ND	3RD	REMARKS
								PERIOD			PERIOD			PERIOD			PERIOD			
D1.30	D-A		3-4140	31 SUPPORT			X							/						
D1.30	D-A		3-4140	33 SUPPORT			X													
D1.30	D-A		3-4150	32 SUPPORT			X									/				
D1.30	D-A		3-4160	31 SUPPORT			X								/					
D1.30	D-A		3-4160	32 SUPPORT			X													
D1.30	D-A		3-4160	33 SUPPORT			X													
D1.30	D-A		3-4160	34 SUPPORT			X													
D1.30	D-A		3-4170	31 SUPPORT			X								/					
D1.30	D-A		3-4170	32 SUPPORT			X													
TOTAL ID'S FOR D1.30				34	0	0	34	TOTAL SCHEDULED						4	4	5				
								TOTAL COMPLETED						0	0	0				

NSBU COMPONENT SURVEILLANCE SCHEDULE
Westinghouse Proprietary

COMPONENT: PRESSURE RETAINING COMPONENTS

89	89			INT	EXAMINATION METHOD			FIRST INTERVAL			SECOND INTERVAL			THIRD INTERVAL			FOURTH INTERVAL			
ITEM NUMBER	CATEGORY NUMBER	DESCRIPTION	SKETCH NUMBER	IDENT. NUMBER	VOL.	SUR	VIS.	1ST	2ND	3RD	1ST	2ND	3RD	1ST	2ND	3RD	1ST	2ND	3RD	REMARKS
								PERIOD			PERIOD			PERIOD			PERIOD			
D1.30	D-A		3-9100	Reference IWD-5000			X							/	/	/				VT-2. REF. TABLE 4.0
D1.30	D-A		3-9600	Reference IWD-5000			X									/				Code Case N-498-1 Applies
								TOTAL SCHEDULED						1	1	2				
TOTAL ID'S FOR D1.30				2	0	0	2	TOTAL COMPLETED						0	0	0				

NSBU COMPONENT SURVEILLANCE SCHEDULE

Westinghouse Proprietary

COMPONENT: *** CLASS TOTALS FOR IWD ***

89	89		INT		EXAMINATION METHOD			FIRST INTERVAL			SECOND INTERVAL			THIRD INTERVAL			FOURTH INTERVAL			
ITEM NUMBER	CATEGORY NUMBER	DESCRIPTION	SKETCH NUMBER	IDENT. NUMBER	VOL.	SUR	VIS.	1ST	2ND	3RD	1ST	2ND	3RD	1ST	2ND	3RD	1ST	2ND	3RD	REMARKS
								PERIOD			PERIOD			PERIOD			PERIOD			
								TOTAL SCHEDULED						15	15	19				
CLASS TOTALS				163	0	0	163	TOTAL COMPLETED						0	0	0				

NSBU COMPONENT SURVEILLANCE SCHEDULE

COMPONENT:

89	89		INT		EXAMINATION METHOD			FIRST INTERVAL			SECOND INTERVAL			THIRD INTERVAL			FOURTH INTERVAL			
ITEM NUMBER	CATEGORY NUMBER	DESCRIPTION	SKETCH NUMBER	IDENT. NUMBER	VOL.	SUR	VIS.	1ST	2ND	3RD	1ST	2ND	3RD	1ST	2ND	3RD	1ST	2ND	3RD	REMARKS
								PERIOD			PERIOD			PERIOD			PERIOD			
TOTAL ID'S FOR				0	0	0	0	TOTAL SCHEDULED						0	0	0				
								TOTAL COMPLETED						0	0	0				

This Page Intentionally Left Blank

NSBU COMPONENT SURVEILLANCE SCHEDULE

COMPONENT: CLASS 1 PIPING SUPPORTS

89	89		INT		EXAMINATION METHOD			FIRST INTERVAL			SECOND INTERVAL			THIRD INTERVAL			FOURTH INTERVAL			
ITEM NUMBER	CATEGORY NUMBER	DESCRIPTION	SKETCH NUMBER	IDENT. NUMBER	VOL.	SUR	VIS.	1ST	2ND	3RD	1ST	2ND	3RD	1ST	2ND	3RD	1ST	2ND	3RD	REMARKS
								PERIOD			PERIOD			PERIOD			PERIOD			
F1.10	F-A	B-1	1-4101	SI-H-351-1			X													VT-3, CODE CASE N-491-1 APPLIES
F1.10	F-A	A-8	1-4101	SI-H-179A			X													
F1.10	F-A	B-1	1-4102	SI-H-843-19			X													
F1.10	F-A	B-1	1-4102	SI-H-843-18			X													
F1.10	F-A	D-4	1-4102	SI-H-843-17			X													
F1.10	F-A	B-D-2	1-4102	SI-H&R-843-16			X													
F1.10	F-A	B-D-3	1-4102	SI-H&R-843-15			X													
F1.10	F-A	B-D-3	1-4102	SI-H&R-843-14			X													
F1.10	F-A	B-D-3	1-4102	SI-H&R-843-13			X													
F1.10	F-A	B-1	1-4102	SI-H-843-12			X													
F1.10	F-A	B-D-3	1-4102	SI-H&R-843-11			X													
F1.10	F-A	D-4	1-4102	SI-R-843-10			X													
F1.10	F-A	B-D-3	1-4102	SI--H&R-843-9			X													
F1.10	F-A	B-D-3	1-4102	SI--H&R-843-8			X							/						
F1.10	F-A	B-D-3	1-4102	SI--H&R-843-8A			X							/						
F1.10	F-A	B-D-2	1-4102	SI--H&R-843-5C			X													
F1.10	F-A	D-4	1-4102	SI--R-843-6			X									/				
F1.10	F-A	B-D-3	1-4102	SI--H&R-843-7			X									/				
F1.10	F-A	B-D-3	1-4102	SI--H&R-843-7A			X									/				
F1.10	F-A	A-8	1-4103	CH-79-1			X													
F1.10	F-A	A-8	1-4107	RC-H-753-15			X								/					
F1.10	F-A	D-4	1-4107	RC-R-753-16			X													
F1.10	F-A	D-13	1-4107	RC-R-753-17			X													Hydraulic Snubber
F1.10	F-A	D-1	1-4107	RC-H-753-18			X													
F1.10	F-A	D-3	1-4107	RC-H&R-753-19			X													
F1.10	F-A	A-8	1-4108	CH-H-41-15			X							/						
F1.10	F-A	A-8	1-4201	AC-H-10-8			X													
F1.10	F-A	A-13	1-4201	AC-H-10-7			X													Hydraulic Snubber
F1.10	F-A	A-6	1-4201	AC-H-10-6			X							/						
F1.10	F-A	A-6	1-4201	AC-H-10-5			X							/						
F1.10	F-A	D-13	1-4201	AC-R-40			X													Hydraulic Snubber
F1.10	F-A	D-13 & A-6	1-4201	AC-R-41 & AC-H-10-4			X													Hydraulic Snubber
F1.10	F-A	B-1	1-4201	AC-H-10-3			X													

NSBU COMPONENT SURVEILLANCE SCHEDULE
Westinghouse Proprietary

COMPONENT: CLASS 1 PIPING SUPPORTS

89	89		INT		EXAMINATION METHOD			FIRST INTERVAL			SECOND INTERVAL			THIRD INTERVAL			FOURTH INTERVAL			
ITEM NUMBER	CATEGORY NUMBER	DESCRIPTION	SKETCH NUMBER	IDENT. NUMBER	VOL.	SUR	VIS.	1ST	2ND	3RD	1ST	2ND	3RD	1ST	2ND	3RD	1ST	2ND	3RD	REMARKS
								PERIOD			PERIOD			PERIOD			PERIOD			
F1.10	F-A	B-6	1-4201	AC-H-10-2			X													
F1.10	F-A	B-5-14	1-4202	SI-H-168			X									/				
F1.10	F-A	A-8	1-4202	SI-H-167			X													
F1.10	F-A	B-1	1-4207	SI-H-16A-6			X													
F1.10	F-A	B-D-3	1-4207	SI-H&R-16A-7			X													
F1.10	F-A	D-12	1-4207	SI-R-16A-8			X								/					
F1.10	F-A	B-D-2	1-4207	SI-H&R-16A-9			X								/					
F1.10	F-A	B-D-3	1-4207	SI-H&R-16A-10			X									/				
F1.10	F-A	D-13	1-4207	SI-R-16A-11			X													Hydraulic Snubber
F1.10	F-A	A-8	1-4207	SI-H-16A-12			X													
F1.10	F-A	B-5	1-4207	SI-H-16A-13			X													
F1.10	F-A	A-8	1-4301	SI-H-213			X													
F1.10	F-A	D-13	1-4301	SI-R-353-4			X													Hydraulic Snubber
F1.10	F-A	A-8	1-4301	SI-R-353-5			X													
F1.10	F-A	D-4	1-4302	SI-R-56-16			X									/				
F1.10	F-A	A-8	1-4302	SI-H-56-17			X									/				
F1.10	F-A	B-D-12	1-4302	SI-H&R-56-18			X													
F1.10	F-A	B-D-2	1-4302	SI-H&R-56-19			X													
F1.10	F-A	B-1	1-4302	SI-H-56-20			X													
F1.10	F-A	B-D-3	1-4302	SI-H&R-56-21			X													
F1.10	F-A	B-1	1-4302	SI-H-56-22			X													
F1.10	F-A	B-D-12	1-4302	SI-H&R-56-23			X													
F1.10	F-A	B-D-3	1-4306	RC-H&R-754-9			X								/					
F1.10	F-A	D-4	1-4306	RC-R-754-10			X								/					
F1.10	F-A	A-8	1-4306	RC-H-754-11			X								/					
F1.10	F-A	B-D-3	1-4306	RC-H&R-754-12			X													
F1.10	F-A	B-D-3	1-4306	RC-H&R-754-13			X													
F1.10	F-A	B-D-2	1-4306	RC-H&R-754-14			X													
F1.10	F-A	D-4	1-4306	RC-R-754-14A			X													
F1.10	F-A	A-8	1-4306	RC-H-754-15			X													
F1.10	F-A	A-8	1-4306	RC-H-754-16			X													
F1.10	F-A	B-D-12	1-4401	SI-H&R-350-3			X									/				
F1.10	F-A	A-8	1-4401	SI-H-350-4			X													

NSBU COMPONENT SURVEILLANCE SCHEDULE
Westinghouse Proprietary

COMPONENT: CLASS 1 PIPING SUPPORTS

89	89		INT		EXAMINATION METHOD			FIRST INTERVAL			SECOND INTERVAL			THIRD INTERVAL			FOURTH INTERVAL			
ITEM NUMBER	CATEGORY NUMBER	DESCRIPTION	SKETCH NUMBER	IDENT. NUMBER	VOL.	SUR	VIS.	1ST	2ND	3RD	1ST	2ND	3RD	1ST	2ND	3RD	1ST	2ND	3RD	REMARKS
								PERIOD			PERIOD			PERIOD			PERIOD			
F1.10	F-A	B-D-3	1-4406	SI-H&R-16-24			X								/					
F1.10	F-A	D-12	1-4406	SI-R-16-25			X													
F1.10	F-A	B-D-3	1-4406	SI-H&R-16-26			X													
F1.10	F-A	B-1	1-4406	SI-H-16-27			X													
F1.10	F-A	D-13	1-4406	SI-R-16-28			X													Hydraulic Snubber
F1.10	F-A	A-8	1-4406	SI-H-16-29			X													
F1.10	F-A	A-8	1-4500	PW-H-63-1			X													
F1.10	F-A	14	1-4500	PWR-120A			X													
F1.10	F-A	14	1-4500	PWR-121A			X							/						
F1.10	F-A	E-18	1-4500	PWR-125			X							/						
F1.10	F-A	B-1-14	1-4501	RC-H-342-1			X													
F1.10	F-A	B-1-14	1-4502	RC-H-343-1			X							/						
F1.10	F-A	B-1-14	1-4503	RC-H-344-1			X													
F1.10	F-A	B-5	1-4504	RC-H-61-10			X													
F1.10	F-A	D-13	1-4504	RC-R-61-11			X													Hydraulic Snubber
F1.10	F-A	D-4	1-4504	RC-R-61-12			X													
F1.10	F-A	A-7	1-4504	RC-H-61-13			X									/				
F1.10	F-A	B-D-12	1-4505	RC-H&R-103A-G			X								/					
F1.10	F-A	B-D-11-12	1-4505	RC-H&R-70-200-G			X								/					
F1.10	F-A	D-12	1-4505	RC-R-70-209A-R			X													
F1.10	F-A	D-11	1-4505	RC-R-70-209B-R			X													
F1.10	F-A	D-11	1-4505	RC-R-70-209C-R			X													
F1.10	F-A	A-8	1-4506	RC-H-62-1			X							/						
F1.10	F-A	B-D-3	1-4506	RC-H&R-62-2			X							/						
F1.10	F-A	D-13	1-4506	RC-R-25			X													Hydraulic Snubber
F1.10	F-A	A-8	1-4506	RC-H-62-2A			X													
F1.10	F-A	B-D-3	1-4506	RC-H&R-62-3			X													
F1.10	F-A	A-8	1-4507	RC-H-61-1			X													
F1.10	F-A	B-D-3	1-4507	RC-H&R-61-2			X									/				
F1.10	F-A	B-D-3	1-4507	RC-H&R-61-3			X													
F1.10	F-A	B-D-3	1-4507	RC-H&R-61-4			X													
F1.10	F-A	D-13	1-4507	RC-R-61-5			X													Hydraulic Snubber

NSBU COMPONENT SURVEILLANCE SCHEDULE
Westinghouse Proprietary

COMPONENT: CLASS 1 PIPING SUPPORTS

89	89		INT		EXAMINATION METHOD			FIRST INTERVAL			SECOND INTERVAL			THIRD INTERVAL			FOURTH INTERVAL			
ITEM NUMBER	CATEGORY NUMBER	DESCRIPTION	SKETCH NUMBER	IDENT. NUMBER	VOL.	SUR	VIS.	1ST	2ND	3RD	1ST	2ND	3RD	1ST	2ND	3RD	1ST	2ND	3RD	REMARKS
								PERIOD			PERIOD			PERIOD			PERIOD			
F1.10	F-A	B-D-3	1-4507	RC-H&R-61-6			X													
F1.10	F-A	B-D-3	1-4507	RC-H&R-61-7			X													
F1.10	F-A	B-D-3	1-4507	RC-H&R-61-8			X													
F1.10	F-A	B-5-14	1-4507	RC-H-61-9			X													
F1.10	F-A	D-4	1-4508	RC-R-64-16			X													
F1.10	F-A	B-D-3	1-4508	RC-H&R-64-17			X													
F1.10	F-A	B-D-12	1-4508	RC-H&R-64-3			X													
F1.10	F-A	B-D-3	1-4508	RC-H&R-64-4			X													
F1.10	F-A	D-4	1-4508	RC-R-64-5			X													
F1.10	F-A	B-D-3	1-4508	RC-H&R-64-6			X													
F1.10	F-A	B-D-2	1-4508	RC-H&R-64-8			X													
F1.10	F-A	D-4	1-4508	RC-R-64-9			X													
F1.10	F-A	B-D-2	1-4508	RC-H&R-64-10			X													
F1.10	F-A	B-D-3	1-4508	RC-H&R-64-11			X													
F1.10	F-A	D-4	1-4508	RC-R-64-13			X													
F1.10	F-A	D-4	1-4508	RC-R-6414			X													
F1.10	F-A	A-8	1-4508	RC-R-6415			X													
F1.10	F-A		1-4601	PWR-85			X								/					
TOTAL ID'S FOR F1.10				116	0	0	116	TOTAL SCHEDULED						10	10	10				
								TOTAL COMPLETED						0	0	0				

NSBU COMPONENT SURVEILLANCE SCHEDULE
Westinghouse Proprietary

COMPONENT: CLASS 2 PIPING SUPPORTS

89	89		INT		EXAMINATION METHOD			FIRST INTERVAL			SECOND INTERVAL			THIRD INTERVAL			FOURTH INTERVAL			
ITEM NUMBER	CATEGORY NUMBER	DESCRIPTION	SKETCH NUMBER	IDENT. NUMBER	VOL.	SUR	VIS.	1ST	2ND	3RD	1ST	2ND	3RD	1ST	2ND	3RD	1ST	2ND	3RD	REMARKS
								PERIOD			PERIOD			PERIOD			PERIOD			
F1.20	F-A	A-8-14	2-2100	HMS-1			X													VT-3, CODE CASE N-491-1 APPLIES
F1.20	F-A	A-8-14	2-2101	MS-H-362			X													
F1.20	F-A	A-8	2-2101	MS-H-2-4			X													
F1.20	F-A	A-8	2-2101	MS-H-361			X													
F1.20	F-A	D-13	2-2101	MS-R-2-1			X													Hydraulic Snubber
F1.20	F-A	C-10-14	2-2101	MS-A-1020-1			X								/					
F1.20	F-A	A-8-14	2-2102	HBF-1			X								/					
F1.20	F-A	D-13	2-2102	BF-R-300			X													Hydraulic Snubber
F1.20	F-A	D-13	2-2102	BFD-H-46			X													Hydraulic Snubber
F1.20	F-A	B-5-14	2-2200	HMS-17			X													
F1.20	F-A	D-13	2-2200	MS-R-200			X													Hydraulic Snubber
F1.20	F-A	A-8-14	2-2200	HMS-2			X													
F1.20	F-A	A-8	2-2201	MS-H-356			X													
F1.20	F-A	A-8	2-2201	MS-H-355			X													
F1.20	F-A	D-11	2-2201	MS-R-1-1			X													
F1.20	F-A	C-10-14	2-2201	MS-A-1018-1			X													
F1.20	F-A	A-8-14	2-2202	HBF-2			X													
F1.20	F-A	A-8-14	2-2202	HMS-3			X							/						
F1.20	F-A	A-6	2-2202	BFD-H-5-2			X													
F1.20	F-A	B-5-14	2-2300	HMS-18			X													
F1.20	F-A	D-13	2-2300	MS-R-100			X													
F1.20	F-A	A-8-14	2-2301	MS-H-372			X													
F1.20	F-A	D-11	2-2301	MS-R-3-3			X													
F1.20	F-A	A-8	2-2301	MS-H-371A			X													
F1.20	F-A	C-10-14	2-2301	MS-A-1022-1			X													

NSBU COMPONENT SURVEILLANCE SCHEDULE
Westinghouse Proprietary

COMPONENT: CLASS 2 PIPING SUPPORTS

89	89		INT		EXAMINATION METHOD			FIRST INTERVAL			SECOND INTERVAL			THIRD INTERVAL			FOURTH INTERVAL			
ITEM NUMBER	CATEGORY NUMBER	DESCRIPTION	SKETCH NUMBER	IDENT. NUMBER	VOL.	SUR	VIS.	1ST	2ND	3RD	1ST	2ND	3RD	1ST	2ND	3RD	1ST	2ND	3RD	REMARKS
								PERIOD			PERIOD			PERIOD			PERIOD			
F1.20	F-A	A-8-14	2-2302	HBF-3			X													
F1.20	F-A	B-6-14	2-2302	BFD-H-43			X													
F1.20	F-A	A-8-14	2-2400	HMS-4			X													
F1.20	F-A	A-8	2-2401	MS-H-367			X													
F1.20	F-A	D-13	2-2401	MS-R-4-1			X													Hydraulic Snubber
F1.20	F-A	C-10-14	2-2401	MS-A-1024-1			X													
F1.20	F-A	A-8-14	2-2402	HBF-4			X													
F1.20	F-A	A-6	2-2402	BFD-H-8-2			X													
F1.20	F-A	A-3-8-14	2-2500	AC-H-10-1			X													
F1.20	F-A	A-3-8-14	2-2500	AC-H-10-11			X													
F1.20	F-A	A-3-8-14	2-2500	AC-R-10-12			X													Hydraulic Snubber
F1.20	F-A	A-3-8-14	2-2500	AC-R-10-13			X													Hydraulic Snubber
F1.20	F-A	A-3-8-14	2-2500	AC-H-10-14			X													
F1.20	F-A	A-3-8-14	2-2500	AC-H-10-15			X													
F1.20	F-A	A-3-8-14	2-2500	AC-H-10-16			X													
F1.20	F-A	A-3-8-14	2-2500	AC-H-10-17			X													
F1.20	F-A	A-3-8-14	2-2500	AC-H-207			X							/						
F1.20	F-A	F-2-10	2-2500	AC-T-57-2			X													
F1.20	F-A	D-13	2-2500	AC-R-10-18A			X													Hydraulic Snubber
F1.20	F-A	D-13	2-2500	AC-R-10-18B			X													Hydraulic Snubber
F1.20	F-A	B-5-14	2-2500	AC-H-10-18C			X							/						
F1.20	F-A	B-5-14	2-2500	AC-H-653-1A			X													
F1.20	F-A	A-8-14	2-2500	MS-10-15-AC-H-57			X													
F1.20	F-A	B-5-14	2-2500	AC-H-201			X													
F1.20	F-A	A-8	2-2510	AC-H-9-10			X													
F1.20	F-A	B-5	2-2510	AC-H-9-9			X													
F1.20	F-A	A-8	2-2510	AC-H-9-8			X													
F1.20	F-A	C-10-14	2-2510	AC-A-9-7			X													
F1.20	F-A	B-1-14	2-2510	AC-H-84			X													
F1.20	F-A	B-1-14	2-2510	AC-H-83			X													
F1.20	F-A	B-5-14	2-2510	AC-H-9-6			X								/					
F1.20	F-A	A-6-14	2-2510	AC-H-86			X													
F1.20	F-A	D-13	2-2511	AC-H-227			X													Hydraulic Snubber
F1.20	F-A	B-5-14	2-2511	AC-H-222			X													Hydraulic Snubber

NSBU COMPONENT SURVEILLANCE SCHEDULE
Westinghouse Proprietary

COMPONENT: CLASS 2 PIPING SUPPORTS

89	89		INT		EXAMINATION METHOD			FIRST INTERVAL			SECOND INTERVAL			THIRD INTERVAL			FOURTH INTERVAL			
ITEM NUMBER	CATEGORY NUMBER	DESCRIPTION	SKETCH NUMBER	IDENT. NUMBER	VOL.	SUR	VIS.	1ST	2ND	3RD	1ST	2ND	3RD	1ST	2ND	3RD	1ST	2ND	3RD	REMARKS
								PERIOD			PERIOD			PERIOD			PERIOD			
F1.20	F-A	D-13	2-2511	AC-R-9-11			X													Hydraulic Snubber
F1.20	F-A	A-8-14	2-2511	AC-H-220			X													
F1.20	F-A	B-D-12	2-2511	AC-H&R-9-14			X									/				
F1.20	F-A	A-8	2-2511	AC-H-219			X													
F1.20	F-A	D-13	2-2511	AC-R-222			X													
F1.20	F-A	B-D-3	2-2511	AC-H&R-9-13			X													
F1.20	F-A	B-D-12	2-2511	AC-H&R-9-5			X													
F1.20	F-A	A-6	2-2511	AC-H-9-4			X													
F1.20	F-A	B-1	2-2511	AC-H-9-4A			X													
F1.20	F-A	A-8-14	2-2511	AC-H-9-3			X													
F1.20	F-A	B-5-14	2-2512	AC-H-210			X									/				
F1.20	F-A	D-13	2-2512	AC-R-212			X													Hydraulic Snubber
F1.20	F-A	D-13	2-2512	AC-R-213			X													Hydraulic Snubber
F1.20	F-A	B-5-14	2-2512	AC-H-211			X													
F1.20	F-A	B-1-14	2-2512	AC-H-212			X													
F1.20	F-A	D-13	2-2512	AC-R-214			X													
F1.20	F-A	B-5-14	2-2512	AC-H-9-1			X													
F1.20	F-A	D-13	2-2512	AC-R-215			X													
F1.20	F-A	D-13	2-2512	AC-R-216			X													Hydraulic Snubber
F1.20	F-A	B-5-14	2-2512	AC-H-214			X													Hydraulic Snubber
F1.20	F-A	B-1-14	2-2512	AC-H-215			X													Hydraulic Snubber
F1.20	F-A	D-13	2-2512	AC-R-221			X													Hydraulic Snubber
F1.20	F-A	D-13	2-2512	AC-R-9-2			X													Hydraulic Snubber
F1.20	F-A	A-8	2-2520	AC-H-90-2			X													
F1.20	F-A	A-8	2-2520	AC-H-90-1			X													
F1.20	F-A	A-8	2-2520	SI-H-293-4			X								/					
F1.20	F-A	A-8	2-2520	SI-H-293-3			X													
F1.20	F-A	B-D-3	2-2520	SI-H&R-293-2			X													
F1.20	F-A	A-8	2-2530	SI-H-93-1			X													
F1.20	F-A	A-3-8	2-2530	SI-H-89-1			X													
F1.20	F-A	D-13	2-2530	MS-60-1-SI-R-89-2			X													Hydraulic Snubber
F1.20	F-A	A-8	2-2530	SI-H-94-1			X													
F1.20	F-A	B-5	2-2530	SI-H-60-1			X													
F1.20	F-A	D-13	2-2530	SI-R-60-2			X													Hydraulic Snubber
F1.20	F-A	A-6	2-2530	SI-H-60-3			X													
F1.20	F-A	B-1	2-2530	SI-H-60-4			X													
F1.20	F-A	B-1	2-2530	SI-H-60-5			X													

NSBU COMPONENT SURVEILLANCE SCHEDULE
Westinghouse Proprietary

COMPONENT: CLASS 2 PIPING SUPPORTS

89	89		INT		EXAMINATION METHOD			FIRST INTERVAL			SECOND INTERVAL			THIRD INTERVAL			FOURTH INTERVAL			
ITEM NUMBER	CATEGORY NUMBER	DESCRIPTION	SKETCH NUMBER	IDENT. NUMBER	VOL.	SUR	VIS.	1ST	2ND	3RD	1ST	2ND	3RD	1ST	2ND	3RD	1ST	2ND	3RD	REMARKS
								PERIOD			PERIOD			PERIOD			PERIOD			
F1.20	F-A	C-2-9	2-2530	SI-A-60-6			X													
F1.20	F-A	B-1	2-2530	SI-H-60-7			X													
F1.20	F-A	A-6	2-2530	SI-H-60-8			X													
F1.20	F-A	D-13	2-2530	SI-R-404			X													Hydraulic Snubber
F1.20	F-A	B-5	2-2530	SI-H-60-9			X							/						
F1.20	F-A	A-6	2-2530	SI-H-60-11			X							/						
F1.20	F-A	A-8	2-2531	SI-H-355-4			X									/				
F1.20	F-A	B-5	2-2531	SI-H-355-3			X													
F1.20	F-A	B-5	2-2531	SI-H-355-2			X													
F1.20	F-A	C-12	2-2531	SI-R-355-1A			X									/				
F1.20	F-A	B-5	2-2531	SI-H-355-1			X													
F1.20	F-A	D-13	2-2532	SI-R-44			X													Hydraulic Snubber
F1.20	F-A	D-13	2-2532	MS-361-1B-SI-R-358			X													Hydraulic Snubber
F1.20	F-A	B-D-12-14	2-2532	SI-H&R-214			X								/					
F1.20	F-A	B-5	2-2532	SI-H-555			X													
F1.20	F-A	B-D-3-12	2-2532	SI-H&R-358-1B			X													
F1.20	F-A	A-8	2-2533	SI-H-359-1			X								/					
F1.20	F-A	D-12	2-2533	SI-R-359-2-G			X								/					
F1.20	F-A	B-D-3	2-2540	SI-H&R-56-11			X													
F1.20	F-A	C-2-14	2-2540	MS-60-4-SI-A-56			X													
F1.20	F-A	B-1	2-2540	MS-60-5-SI-H-56			X													
F1.20	F-A	B-1	2-2540	MS-60-6-SI-H-56			X													
F1.20	F-A	B-1	2-2540	SI-H-56-10			X													
F1.20	F-A	B-1	2-2540	MS-60-7-SI-H-56			X													
F1.20	F-A	A-3-11	2-2540	SI-H-56-9			X													
F1.20	F-A	B-D-3	2-2540	SI-H&R-56-8			X													
F1.20	F-A	B-5	2-2540	SI-H-56-7			X													
F1.20	F-A	B-D-4	2-2540	SI-H&R-56-6			X													
F1.20	F-A	D-13	2-2540	SI-R-56-5			X													Hydraulic Snubber
F1.20	F-A	B-1	2-2540	MS-60-15-SI-H-56			X													
F1.20	F-A	B-1	2-2540	MS-60-16-SI-H-56			X													
F1.20	F-A	B-1	2-2540	SI-H-56-4			X									/				
F1.20	F-A	B-1	2-2540	MS-60-17-SI-H-56			X									/				
F1.20	F-A	A-6	2-2541	SI-H-170			X													
F1.20	F-A	B-1	2-2541	SI-H-171			X													

NSBU COMPONENT SURVEILLANCE SCHEDULE
Westinghouse Proprietary

COMPONENT: CLASS 2 PIPING SUPPORTS

89	89		INT		EXAMINATION METHOD			FIRST INTERVAL			SECOND INTERVAL			THIRD INTERVAL			FOURTH INTERVAL			
ITEM NUMBER	CATEGORY NUMBER	DESCRIPTION	SKETCH NUMBER	IDENT. NUMBER	VOL.	SUR	VIS.	1ST	2ND	3RD	1ST	2ND	3RD	1ST	2ND	3RD	1ST	2ND	3RD	REMARKS
								PERIOD			PERIOD			PERIOD			PERIOD			
F1.20	F-A	B-1	2-2541	SI-H-172			X													
F1.20	F-A	D-13	2-2541	SI-R-356-5			X													Hydraulic Snubber
F1.20	F-A	A-6	2-2541	SI-H-173			X													
F1.20	F-A	B-D-12-14	2-2541	SI-H-H&R-174			X													
F1.20	F-A	D-13	2-2541	SI-R-356-4			X													Hydraulic Snubber
F1.20	F-A	D-12	2-2541	SI-R-356-6			X									/				
F1.20	F-A	A-6	2-2541	SI-H-175			X									/				
F1.20	F-A	C-10-14	2-2541	MS-60-6-SI-A-356			X													
F1.20	F-A	B-1	2-2541	MS-60-5-SI-H-356			X													
F1.20	F-A	B-1-14	2-2541	SI-H-177			X													
F1.20	F-A	D-4	2-2541	SI-R-356-3			X													
F1.20	F-A	D-13	2-2541	SI-R-356-2			X													Hydraulic Snubber
F1.20	F-A	D-4	2-2541	SI-R-356-2A			X													
F1.20	F-A	A-6	2-2541	SI-H-356-1			X													
F1.20	F-A	A-6	2-2542	SI-H-199			X													
F1.20	F-A	D-13	2-2542	SI-R-361-9			X													Hydraulic Snubber
F1.20	F-A	A-6	2-2542	SI-H-198			X													
F1.20	F-A	D-13	2-2542	SI-R-361-8			X													Hydraulic Snubber
F1.20	F-A	A-6	2-2542	SI-H-197			X													
F1.20	F-A	B-1-14	2-2542	SI-H-196			X													
F1.20	F-A	B-1-14	2-2542	SI-H-195			X													
F1.20	F-A	C-10-14	2-2542	SI-A-361-7			X													
F1.20	F-A	A-8	2-2542	SI-H-361-6			X													
F1.20	F-A	B-1-14	2-2542	SI-H-361-5			X													
F1.20	F-A	D-13	2-2542	SI-R-361-4			X													Hydraulic Snubber
F1.20	F-A	B-1	2-2542	SI-H-361-3			X													
F1.20	F-A	B-1	2-2542	SI-H-361-2			X													
F1.20	F-A	B-D-12-14	2-2542	SI-H&R-361-1A			X							/						
F1.20	F-A	D-13	2-2542	SI-R-361-1B			X													Hydraulic Snubber
F1.20	F-A	B-D-12-14	2-2542	MS-214-SI-H&R-361			X							/						
F1.20	F-A	D-12	2-2543	SI-R-550-9			X													
F1.20	F-A	B-D-2	2-2543	MS-60-15-SI-H&R-550			X													
F1.20	F-A	B-D-3	2-2543	MS-60-16-SI-H&R-550			X													
F1.20	F-A	A-6	2-2543	SI-H-550-8			X													
F1.20	F-A	B-D-2	2-2543	MS-60-18-SI-H&R-550			X													
F1.20	F-A	B-D-12-14	2-2543	SI-H&R-550-7			X									/				
F1.20	F-A	B-D-12-14	2-2543	SI-H&R-550-4			X									/				

NSBU COMPONENT SURVEILLANCE SCHEDULE
Westinghouse Proprietary

COMPONENT: CLASS 2 PIPING SUPPORTS

89	89		INT		EXAMINATION METHOD			FIRST INTERVAL			SECOND INTERVAL			THIRD INTERVAL			FOURTH INTERVAL			
ITEM NUMBER	CATEGORY NUMBER	DESCRIPTION	SKETCH NUMBER	IDENT. NUMBER	VOL.	SUR	VIS.	1ST	2ND	3RD	1ST	2ND	3RD	1ST	2ND	3RD	1ST	2ND	3RD	REMARKS
								PERIOD			PERIOD			PERIOD			PERIOD			
F1.20	F-A	B-D-11	2-2544	AC-R-3042-003			X													
F1.20	F-A	B-D-11	2-2544	AC-R-3042-005			X													
F1.20	F-A	B-D-11	2-2544	AC-R-3042-004			X													
F1.20	F-A	B-D-11	2-2544	AC-R-3042-006			X													
F1.20	F-A	B-D-11	2-2544	AC-R-3042-007			X							/						
F1.20	F-A	A-8	2-2547	SI-H-145-1-V			X							/						
F1.20	F-A	B-D-2	2-2547	SI-R-145-2C-U			X							/						
F1.20	F-A	B-D-2	2-2547	SI-R-145-2A-U			X													
F1.20	F-A	A-8	2-2547	SI-H-145-2B-V			X													
F1.20	F-A	A-6	2-2547	SI-H-145-3-R			X													
F1.20	F-A	B-D-2	2-2547	SI-H&R-145-4A-U			X													
F1.20	F-A	B-D-2	2-2547	SI-H&R-145-4B-U			X													
F1.20	F-A	B-D-2	2-2547	SI-H&R-145-4C-U			X													
F1.20	F-A	D-12	2-2546	SI-H&R-16-1-G			X													
F1.20	F-A	A-6	2-2546	SI-H-16-2-S			X													
F1.20	F-A	B-D-2	2-2546	SI-H&R-16-3-U			X													
F1.20	F-A	D-12	2-2546	SI-R-16-4-G			X													
F1.20	F-A	A-8	2-2546	SI-H-16-5-V			X													
F1.20	F-A	B-D-2	2-2546	SI-H&R-16-6-U			X													
F1.20	F-A	B-D-2	2-2546	SI-H&R-16-7-U			X							/						
F1.20	F-A	B-D-2	2-2546	SI-H&R-16-13-U			X							/						
F1.20	F-A	D-12	2-2546	SI-R-16-9-H			X													
F1.20	F-A	A-6	2-2546	SI-H-16-10-R			X													
F1.20	F-A	B-D-2	2-2546	SI-H&R-16-11-U			X													
F1.20	F-A	A-6	2-2546	SI-H-16-12-R			X													
F1.20	F-A	D-12	2-2546	SI-R-16-14-G			X													
F1.20	F-A	B-D-2	2-2546	SI-H&R-16-23-U			X													
F1.20	F-A	B-D-2	2-2555	SI-H&R-16A-5-U			X								/					
F1.20	F-A	B-D-2	2-2555	M/S-33-4-SI-H&R-16A-U			X													
F1.20	F-A	D-12	2-2550	SI-R-56-1-G			X													
F1.20	F-A	D-12	2-2550	SI-R-56-1A-G			X													
F1.20	F-A	D-12	2-2550	SI-R-56-2-G			X													
F1.20	F-A	A-8	2-2550	SI-H-56-3-V			X							/						
F1.20	F-A	B-D-2	2-2550	SI-H&R-56-3A-U			X													
F1.20	F-A	A-6	2-2550	SI-H-56-12-S			X													
F1.20	F-A	D-12	2-2550	SI-H&R-56-13G			X													

NSBU COMPONENT SURVEILLANCE SCHEDULE
Westinghouse Proprietary

COMPONENT: CLASS 2 PIPING SUPPORTS

89	89		INT		EXAMINATION METHOD			FIRST INTERVAL			SECOND INTERVAL			THIRD INTERVAL			FOURTH INTERVAL			
ITEM NUMBER	CATEGORY NUMBER	DESCRIPTION	SKETCH NUMBER	IDENT. NUMBER	VOL.	SUR	VIS.	1ST	2ND	3RD	1ST	2ND	3RD	1ST	2ND	3RD	1ST	2ND	3RD	REMARKS
								PERIOD			PERIOD			PERIOD			PERIOD			
F1.20	F-A	B-D-2	2-2550	SI-H&R-56-14A-U			X													
F1.20	F-A	B-D-2	2-2550	SI-H&R-56-14B-U			X													
F1.20	F-A	D-12	2-2550	SI-R-56-15A-G			X													
F1.20	F-A	A-8	2-2550	SI-H-56-15B-5			X													
F1.20	F-A	D-12	2-2549	SI-H&R-56A-1-G			X													
F1.20	F-A	B-D-2	2-2549	SI-H&R-56A-2-U			X													
F1.20	F-A	B-D-2	2-2549	SI-H&R-56A-3-U			X													
F1.20	F-A	A-6	2-2549	RC-H-56A-4-S			X													
F1.20	F-A	B-D-11	2-2549	RC-H&R-56A-5-G			X													
F1.20	F-A	D-12	2-2549	RC-R-56A-7-G			X								/					
F1.20	F-A	B-D-2	2-2549	RC-H&R-56A-8-U			X													
F1.20	F-A	D-12	2-2554	CH-R-594-1-G			X													
F1.20	F-A	D-12	2-2556	RC-R-753-17-H			X													
F1.20	F-A	B-D-2	2-2557	RC-H&R-754-8-U			X													
F1.20	F-A	A-6	2-2553	SI-H-843-1-R			X													
F1.20	F-A	A-8	2-2553	SI-H-843-2-V			X													
F1.20	F-A	B-D-2	2-2553	SI-H&R-843-4-U			X								/					
F1.20	F-A	D-12	2-2553	SI-R-843-3-G			X								/					
F1.20	F-A	B-D-2	2-2553	SI-H&R-843-5A-U			X													
F1.20	F-A	B-D-2	2-2553	SI-H&R-843-5B-U			X													
F1.20	F-A	B-D-2	2-2551	SI-H&R-844-1A-U			X													
F1.20	F-A	B-D-2	2-2551	SI-H&R-844-1-U			X													
F1.20	F-A	B-D-2	2-2551	SI-H&R-844-2-U			X													
F1.20	F-A	B-D-2	2-2551	SI-H&R-844-3-U			X								/					
F1.20	F-A	B-D-11	2-2551	SI-H&R-844-4-G			X								/					
F1.20	F-A	B-D-2	2-2551	SI-H&R-844-5-U			X													
F1.20	F-A	A-6	2-2551	SI-H-844-6-S			X													
F1.20	F-A	A-8	2-2551	SI-H-844-7-V			X													
F1.20	F-A	B-D-2	2-2552	SI-H&R-845-1-U			X													
F1.20	F-A	B-D-2	2-2552	SI-H&R-845-2A-U			X													
F1.20	F-A	B-D-2	2-2552	SI-H&R-845-2B-U			X													
F1.20	F-A	B-D-2	2-2552	SI-H&R-845-4-U			X													
F1.20	F-A	B-D-2	2-2552	SI-H&R-845-5-U			X													

NSBU COMPONENT SURVEILLANCE SCHEDULE
Westinghouse Proprietary

COMPONENT: CLASS 2 PIPING SUPPORTS

89	89		INT		EXAMINATION METHOD			FIRST INTERVAL			SECOND INTERVAL			THIRD INTERVAL			FOURTH INTERVAL			
ITEM NUMBER	CATEGORY NUMBER	DESCRIPTION	SKETCH NUMBER	IDENT. NUMBER	VOL.	SUR	VIS.	1ST	2ND	3RD	1ST	2ND	3RD	1ST	2ND	3RD	1ST	2ND	3RD	REMARKS
								PERIOD			PERIOD			PERIOD			PERIOD			
F1.20	F-A	D-12	2-2552	SI-R-845-6-G			X													
F1.20	F-A	B-D-11	2-2552	SI-H&R-7-G			X									/				
F1.20	F-A	B-D-2	2-2548	SI-H&R-846-1-U			X									/				
F1.20	F-A	B-D-2	2-2548	SI-H&R-846-2-U			X													
F1.20	F-A	A-6	2-2548	SI-H-846-3-S			X													
F1.20	F-A	A-6	2-2548	SI-H-846-4-S			X									/				
F1.20	F-A	B-D-2	2-2548	SI-H&R-846-5A-U			X													
F1.20	F-A	D-12	2-2548	SI-R-846-5B-G			X									/				
F1.20	F-A	B-D-2	2-2548	SI-H&R-846-6-U			X													
F1.20	F-A	B-D-11	2-2548	SI-H&R-846-7-G			X													
F1.20	F-A	B-D-11	2-2548	SI-H&R-846-8A-G			X													
F1.20	F-A	B-D-2	2-2548	SI-H&R-846-8B-U			X													
F1.20	F-A	B-D-2	2-2548	SI-H&R-846-9-U			X													
F1.20	F-A	B-D-2	2-2548	SI-H&R-846-10-U			X													
F1.20	F-A	B-D-2	2-2548	SI-H&R-846-11-U			X													
F1.20	F-A	B-D-2	2-2548	SI-H&R-846-12-U			X													
F1.20	F-A	B-D-2	2-2548	SI-H&R-846-13A-U			X													
F1.20	F-A	B-D-11	2-2548	SI-H&R-846-14B-G			X													
F1.20	F-A	B-D-11	2-2548	SI-H&R-846-13C-G			X													
F1.20	F-A	B-D-2	2-2548	SI-H&R-846-14A-U			X													
F1.20	F-A	B-D-2	2-2548	SI-H&R-846-14B-U			X													
F1.20	F-A	B-D-2	2-2548	SI-H&R-846-15-U			X													
F1.20	F-A	B-D-2	2-2548	SI-H&R-846-16-U			X													

NSBU COMPONENT SURVEILLANCE SCHEDULE
Westinghouse Proprietary

COMPONENT: CLASS 2 PIPING SUPPORTS

89	89		INT		EXAMINATION METHOD			FIRST INTERVAL			SECOND INTERVAL			THIRD INTERVAL			FOURTH INTERVAL			
ITEM NUMBER	CATEGORY NUMBER	DESCRIPTION	SKETCH NUMBER	IDENT. NUMBER	VOL.	SUR	VIS.	1ST	2ND	3RD	1ST	2ND	3RD	1ST	2ND	3RD	1ST	2ND	3RD	REMARKS
								PERIOD			PERIOD			PERIOD			PERIOD			
TOTAL ID'S FOR F1.20				260	0	0	260	TOTAL SCHEDULED						13	13	14				
								TOTAL COMPLETED						0	0	0				

NSBU COMPONENT SURVEILLANCE SCHEDULE
Westinghouse Proprietary

COMPONENT: CLASS 3 PIPING SUPPORTS

89	89		INT		EXAMINATION METHOD			FIRST INTERVAL			SECOND INTERVAL			THIRD INTERVAL			FOURTH INTERVAL			
ITEM NUMBER	CATEGORY NUMBER	DESCRIPTION	SKETCH NUMBER	IDENT. NUMBER	VOL.	SUR	VIS.	1ST	2ND	3RD	1ST	2ND	3RD	1ST	2ND	3RD	1ST	2ND	3RD	REMARKS
								PERIOD			PERIOD			PERIOD			PERIOD			
F1.30	F-A	C-14	3-3400	SWN-A-1081-2			X													VT-3, CODE CASE N-491-1 APPLIES
F1.30	F-A	C-10-14	3-3400	SWN-A-1082-2			X													
F1.30	F-A	C-10	3-3400	SWN-A-1083-2			X													
F1.30	F-A	B-D-2	3-3400	SWN-H&R-1081-1			X													
F1.30	F-A	B-D-11	3-3400	SWN-H&R-1081-3			X													
F1.30	F-A	B-D-11	3-3400	SWN-H&R-1081-6			X								/					
F1.30	F-A	B-D-2	3-3400	SWN-H&R-1082-1			X													
F1.30	F-A	B-D-11	3-3400	SWN-H&R-1082-3			X													
F1.30	F-A	B-D-11	3-3400	SWN-H&R-1082-6			X								/					
F1.30	F-A	B-D-2	3-3400	SWN-H&R-1083-1			X													
F1.30	F-A	B-D-11	3-3400	SWN-H&R-1083-3			X													
F1.30	F-A	B-D-11	3-3400	SWN-H&R-1083-6			X								/					
F1.30	F-A	C-10-14	3-3401	SWN-A-1084-2			X													
F1.30	F-A	C-10	3-3401	SWN-A-1085-2			X													
F1.30	F-A	C-10-14	3-3401	SWN-A-1086-2			X													
F1.30	F-A	B-D-2	3-3401	SWN-H&R-1084-1			X													
F1.30	F-A	B-D-11	3-3401	SWN-H&R-1084-3			X													
F1.30	F-A	B-D-11	3-3401	SWN-H&R-1084-6			X													
F1.30	F-A	B-D	3-3401	SWN-H&R-1085-1			X													
F1.30	F-A	B-D-11	3-3401	SWN-H&R-1085-3			X													
F1.30	F-A	B-D-11	3-3401	SWN-H&R-1085-6			X													
F1.30	F-A	B-D-2	3-3401	SWN-H&R-1086-1			X													
F1.30	F-A	B-D-11	3-3401	SWN-H&R-1086-3			X													
F1.30	F-A	B-D-11	3-3401	SWN-H&R-1086-6			X													
F1.30	F-A	B-D-11	3-3402	M/S-508A-SWN-H&R-409			X													
F1.30	F-A	B-D-11	3-3402	M/S-508-SWN-H&R-409			X													
F1.30	F-A	B-D-11	3-3402	M/S-509-SWN-H&R-409			X													
F1.30	F-A	B-D-11	3-3402	M/S-510-SWN-H&R-409			X													
F1.30	F-A	B-D-11	3-3402	M/S-511-SWN-H&R-409			X													
F1.30	F-A	B-11	3-3402	SW-H-1219-1B-S			X													
F1.30	F-A	A-6	3-3402	SW-H-409-R			X													INACCESSIBLE
F1.30	F-A	C-10	3-3402	SWN-A-199			X									/				

NSBU COMPONENT SURVEILLANCE SCHEDULE
Westinghouse Proprietary

COMPONENT: CLASS 3 PIPING SUPPORTS

89	89		INT		EXAMINATION METHOD			FIRST INTERVAL			SECOND INTERVAL			THIRD INTERVAL			FOURTH INTERVAL			
ITEM NUMBER	CATEGORY NUMBER	DESCRIPTION	SKETCH NUMBER	IDENT. NUMBER	VOL.	SUR	VIS.	1ST	2ND	3RD	1ST	2ND	3RD	1ST	2ND	3RD	1ST	2ND	3RD	REMARKS
								PERIOD			PERIOD			PERIOD			PERIOD			
F1.30	F-A	A-D-6-11	3-3402	SWN-H&R-409-14A			X													INACCESSIBLE
F1.30	F-A	A-D-6-11	3-3402	SWN-H&R-409-15			X													INACCESSIBLE
F1.30	F-A	A-D-6-11	3-3402	SWN-H&R-409-16A			X													INACCESSIBLE
F1.30	F-A	A-D-6-11	3-3402	SWN-H&R-409-16B			X													INACCESSIBLE
F1.30	F-A	A-D-6-11	3-3402	SWN-H&R-409-17A			X													INACCESSIBLE
F1.30	F-A	B-D-12	3-3402	SWN-H&R-409-18-G			X													INACCESSIBLE
F1.30	F-A	B-D-12	3-3402	SWN-H&R-409-19-G			X													INACCESSIBLE
F1.30	F-A	B-D-11	3-3402	SWN-H&R-409-20-R			X													INACCESSIBLE
F1.30	F-A	A-D-6-11	3-3402	SWN-H-409-10			X													INACCESSIBLE
F1.30	F-A	A-6	3-3402	SWN-H-409-11			X													INACCESSIBLE
F1.30	F-A	A-D-6-11	3-3402	SWN-H-409-12			X													INACCESSIBLE
F1.30	F-A	A-6	3-3402	SWN-H-409-13			X													INACCESSIBLE
F1.30	F-A	A-6	3-3402	SWN-H-409-14B			X													INACCESSIBLE
F1.30	F-A	A-6	3-3402	SWN-H-409-14C			X													INACCESSIBLE
F1.30	F-A	A-6	3-3402	SWN-H-409-14D			X													INACCESSIBLE
F1.30	F-A	A-6	3-3402	SWN-H-409-6			X													
F1.30	F-A	B-1	3-3402	SWN-H-409-7			X													INACCESSIBLE
F1.30	F-A	D-4	3-3402	SWN-R-409-17B			X													INACCESSIBLE
F1.30	F-A	D-4	3-3402	SWN-R-547			X									/				
F1.30	F-A	A-6	3-3403	M/S-409-10-SWN-H-408			X													INACCESSIBLE
F1.30	F-A	A-6	3-3403	M/S-409-11-SWN-H-408			X													INACCESSIBLE
F1.30	F-A	B-D-11	3-3403	M/S-409-12-SWN-H&R-408			X													INACCESSIBLE
F1.30	F-A	B-D-11	3-3403	M/S-409-13-SWN-H-408			X													INACCESSIBLE
F1.30	F-A	B-D-11	3-3403	M/S-409-14A-SWN-H&R-408			X													INACCESSIBLE
F1.30	F-A	B-D-11	3-3403	M/S-409-15-SWN-H&R-408			X													INACCESSIBLE
F1.30	F-A	A-6	3-3403	M/S-409-16A-SWN-H&R-408			X													INACCESSIBLE
F1.30	F-A	A-D-6-11	3-3403	M/S-409-16B-SWN-H&R-408			X													INACCESSIBLE
F1.30	F-A	A-D-6-11	3-3403	M/S-409-17A-SWN-H&R-408			X													INACCESSIBLE
F1.30	F-A	D-11	3-3403	M/S-409-17B-SWN-R-408			X													INACCESSIBLE
F1.30	F-A	B-D-11	3-3403	M/S-508-SWN-H&R-408			X													INACCESSIBLE
F1.30	F-A	B-D-11	3-3403	M/S-509-SWN-H&R-408			X													INACCESSIBLE
F1.30	F-A	B-D-11	3-3403	M/S-510-SWN-H&R-408			X													INACCESSIBLE
F1.30	F-A	B-D-11	3-3403	M/S-511-SWN-H&R-408			X									/				INACCESSIBLE
F1.30	F-A	D-12	3-3403	M/S-547-SWN-R-408			X													INACCESSIBLE

NSBU COMPONENT SURVEILLANCE SCHEDULE
Westinghouse Proprietary

COMPONENT: CLASS 3 PIPING SUPPORTS

89	89		INT		EXAMINATION METHOD			FIRST INTERVAL			SECOND INTERVAL			THIRD INTERVAL			FOURTH INTERVAL			
ITEM NUMBER	CATEGORY NUMBER	DESCRIPTION	SKETCH NUMBER	IDENT. NUMBER	VOL.	SUR	VIS.	1ST	2ND	3RD	1ST	2ND	3RD	1ST	2ND	3RD	1ST	2ND	3RD	REMARKS
								PERIOD			PERIOD			PERIOD			PERIOD			
F1.30	F-A	B-D-12	3-3403	SWN-H&R-408-4			X													
F1.30	F-A	B-D-12	3-3403	SWN-H&R-408-5			X													
F1.30	F-A	B-D-11	3-3403	SWN-H&R-408-5A			X													
F1.30	F-A	B-1	3-3403	SWN-H-408-3			X													
F1.30	F-A	A-6	3-3403	SWN-H-408-6A			X													
F1.30	F-A	A-6	3-3403	SWN-H-408-6B			X													
F1.30	F-A	B-D-11	3-3404	M/S-502-SWN-H&R-407			X													
F1.30	F-A	B-D-11	3-3404	M/S-503-SWN-H&R-407			X													
F1.30	F-A	B-D-11	3-3404	M/S-504-SWN-H&R-407			X													
F1.30	F-A	B-D-11	3-3404	M/S-505-SWN-H&R-407			X													
F1.30	F-A	B-D-11	3-3404	M/S-506-SWN-H&R-407			X													
F1.30	F-A	B-D-11	3-3404	M/S-507-SWN-H&R-407			X													
F1.30	F-A	B-D-11	3-3404	M/S-525-SWN-H&R-409			X													
F1.30	F-A	B-D-11	3-3404	M/S-526-SWN-H&R-409			X													
F1.30	F-A	D-12	3-3404	M/S-563-SWN-R-407			X													
F1.30	F-A	B-D-3	3-3404	SWN-H&R-407-1			X													
F1.30	F-A	B-D-3	3-3404	SWN-H&R-407-2			X													
F1.30	F-A	B-D-3	3-3404	SWN-H&R-407-3			X													
F1.30	F-A	B-D-4	3-3404	SWN-H&R-407-4			X													
F1.30	F-A	B-D-3	3-3404	SWN-H&R-549			X													
F1.30	F-A	A-8	3-3404	SWN-H-551			X								/					
F1.30	F-A	D-12	3-3404	SWN-R-548			X													
F1.30	F-A	D-12	3-3404	SWN-R-550			X													
F1.30	F-A	B-D-11	3-3405	M/S-407-1-SWN-H&R-411			X													
F1.30	F-A	B-D-11	3-3405	M/S-407-2-SWN-H&R-411			X													
F1.30	F-A	B-D-11	3-3405	M/S-407-3-SWN-H&R-411			X													
F1.30	F-A	B-D-11	3-3405	M/S-407-4-SWN-H&R-411			X													
F1.30	F-A	B-D-11	3-3405	M/S-502-SWN-H&R-411			X													
F1.30	F-A	B-D-11	3-3405	M/S-503-SWN-H&R-411			X													
F1.30	F-A	B-D-11	3-3405	M/S-504-SWN-H&R-411			X													
F1.30	F-A	B-D-11	3-3405	M/S-505-SWN-H&R-411			X													
F1.30	F-A	B-D-11	3-3405	M/S-506-SWN-H&R-411			X													
F1.30	F-A	B-D-11	3-3405	M/S-507-SWN-H&R-411			X													

NSBU COMPONENT SURVEILLANCE SCHEDULE
Westinghouse Proprietary

COMPONENT: CLASS 3 PIPING SUPPORTS

89	89		INT		EXAMINATION METHOD			FIRST INTERVAL			SECOND INTERVAL			THIRD INTERVAL			FOURTH INTERVAL			
ITEM NUMBER	CATEGORY NUMBER	DESCRIPTION	SKETCH NUMBER	IDENT. NUMBER	VOL.	SUR	VIS.	1ST	2ND	3RD	1ST	2ND	3RD	1ST	2ND	3RD	1ST	2ND	3RD	REMARKS
								PERIOD			PERIOD			PERIOD			PERIOD			
F1.30	F-A	D-12	3-3405	M/S-563-SWN-R-411			X													
F1.30	F-A	B-D-2	3-3405	SWN-H&R-525			X								/					
F1.30	F-A	B-D-2	3-3405	SWN-H&R-526			X								/					
F1.30	F-A	B-D-2-3	3-3405	SWN-H&R-529			X													
F1.30	F-A	B-D-3	3-3405	SWN-H&R-558			X													
F1.30	F-A	A-8	3-3405	SWN-H-557			X													
F1.30	F-A	D-4	3-3405	SWN-R-524			X													
F1.30	F-A	D-4	3-3405	SWN-R-556			X													
F1.30	F-A	B-D-2	3-3406	SWN-H&R-527			X							/						
F1.30	F-A	B-D-2	3-3406	SWN-H&R-528			X							/						
F1.30	F-A	B-D-2-3	3-3406	SWN-H&R-529			X													
F1.30	F-A	B-D-2	3-3406	SWN-H&R-530			X													
F1.30	F-A	B-D-2	3-3406	SWN-H&R-408-1			X													
F1.30	F-A	B-D-2	3-3406	SWN-H&R-533			X													
F1.30	F-A	D-11	3-3406	SWN-R-532			X													
F1.30	F-A	B-D-11	3-3407	M/S-407-2A-SWN-H&R-405			X													
F1.30	F-A	B-D-11	3-3407	M/S-407-2B-SWN-H&R-405			X													
F1.30	F-A	B-D-11	3-3407	M/S-407-2-SWN-H&R-405			X													
F1.30	F-A	B-D-11	3-3407	M/S-407-3-SWN-H&R-405			X													
F1.30	F-A	B-D-11	3-3407	M/S-502-SWN-H&R-405			X													
F1.30	F-A	B-D-11	3-3407	M/S-503-SWN-H&R-405			X													
F1.30	F-A	B-D-11	3-3407	M/S-504-SWN-H&R-405			X													
F1.30	F-A	B-D-11	3-3407	M/S-505-SWN-H&R-405			X													
F1.30	F-A	B-D-11	3-3407	M/S-506-SWN-H&R-405			X													
F1.30	F-A	B-D-11	3-3407	M/S-507-SWN-H&R-405			X													
F1.30	F-A	B-D-11	3-3407	M/S-508A-SWN-H&R-405			X													
F1.30	F-A	B-D-11	3-3407	M/S-508-SWN-H&R-405			X													
F1.30	F-A	B-D-11	3-3407	M/S-509-SWN-H&R-405			X													
F1.30	F-A	B-D-11	3-3407	M/S-510-SWN-H&R-405			X													
F1.30	F-A	B-D-11	3-3407	M/S-511-SWN-H&R-405			X													
F1.30	F-A	B-D-12	3-3407	SW-H&R-562A			X													
F1.30	F-A	B-D-2	3-3407	SWH-H&R-390-1			X													
F1.30	F-A	C-9	3-3407	SWN-A-561			X													

NSBU COMPONENT SURVEILLANCE SCHEDULE
Westinghouse Proprietary

COMPONENT: CLASS 3 PIPING SUPPORTS

89	89		INT		EXAMINATION METHOD			FIRST INTERVAL			SECOND INTERVAL			THIRD INTERVAL			FOURTH INTERVAL			
ITEM NUMBER	CATEGORY NUMBER	DESCRIPTION	SKETCH NUMBER	IDENT. NUMBER	VOL.	SUR	VIS.	1ST	2ND	3RD	1ST	2ND	3RD	1ST	2ND	3RD	1ST	2ND	3RD	REMARKS
								PERIOD			PERIOD			PERIOD			PERIOD			
F1.30	F-A	B-D-12	3-3407	SWN-H&R-559-U			X							/						
F1.30	F-A	B-D-12	3-3407	SWN-H&R-562			X													
F1.30	F-A	D-4	3-3407	SWN-R-405-2			X													
F1.30	F-A	D-4	3-3407	SWN-R-405-2-A			X													
F1.30	F-A	D-4	3-3407	SWN-R-560			X													
F1.30	F-A	D-4	3-3407	SWN-R-563			X													
F1.30	F-A	B-D-12	3-3407	SWN-R-564			X							/						
F1.30	F-A	B-D-3	3-3408	SWN-H&R-406-2A			X													
F1.30	F-A	B-D-3	3-3408	SWN-H&R-406-2B			X													
F1.30	F-A	B-D-3	3-3408	SWN-H&R-406-2C			X													
F1.30	F-A	B-D-3	3-3408	SWN-H&R-406-3			X													
F1.30	F-A	A-6	3-3408	SWN-H-406-7			X									/				
F1.30	F-A	D-4	3-3408	SWN-R-406-1			X													
F1.30	F-A	D-12	3-3408	SWN-R-406-4			X													
F1.30	F-A	D-12	3-3408	SWN-R-406-5			X													
F1.30	F-A	B-8	3-3408	SWN-R-406-6			X													
F1.30	F-A	B-D-11	3-3409	M/S-11E-23-SW-H-12E			X													
F1.30	F-A	B-D-11	3-3409	M/S-11E-40-SW-H&R-12E			X													
F1.30	F-A	D-13	3-3409	SW-R-12E-3A			X													
F1.30	F-A	B-D-3-14	3-3409	SW-H&R-12E-1			X													
F1.30	F-A	A-D-10	3-3409	SW-H&R-12E-5			X							/						
F1.30	F-A	B-D-3	3-3409	SW-H&R-83			X													
F1.30	F-A	A-6	3-3409	SW-H&R-87			X													
F1.30	F-A	A-6	3-3409	SW-H&R-88			X													
F1.30	F-A	B-1	3-3409	SW-H-12E-2			X													
F1.30	F-A	A-8	3-3409	SW-H-79			X													
F1.30	F-A	A-6	3-3409	SW-H-84			X													
F1.30	F-A	A-6	3-3409	SW-H-85A			X													
F1.30	F-A	A-8	3-3409	SW-H-90			X													
F1.30	F-A	D-3	3-3409	SWN-H&R-406-8			X													
F1.30	F-A	A-8	3-3409	SWN-H-406-9			X													
F1.30	F-A	D-12	3-3409	SW-R-12D-18-G			X													
F1.30	F-A	D-12	3-3409	SW-R-12D-19			X													

NSBU COMPONENT SURVEILLANCE SCHEDULE
Westinghouse Proprietary

COMPONENT: CLASS 3 PIPING SUPPORTS

89	89		INT		EXAMINATION METHOD			FIRST INTERVAL			SECOND INTERVAL			THIRD INTERVAL			FOURTH INTERVAL			
ITEM NUMBER	CATEGORY NUMBER	DESCRIPTION	SKETCH NUMBER	IDENT. NUMBER	VOL.	SUR	VIS.	1ST	2ND	3RD	1ST	2ND	3RD	1ST	2ND	3RD	1ST	2ND	3RD	REMARKS
								PERIOD			PERIOD			PERIOD			PERIOD			
F1.30	F-A	D-4	3-3409	SW-R-12E-3			X													Hydraulic Snubber
F1.30	F-A	D-4	3-3409	SW-R-12E-4			X							/						
F1.30	F-A	D-12	3-3410	M/S-11A-21-SW-R-12B			X													
F1.30	F-A	A-1	3-3410	M/S-11C-27-SW-H-12C-S			X													
F1.30	F-A	D-12	3-3410	M/S-12A-31-SW-R-12C			X													
F1.30	F-A	B-6	3-3410	M/S-12A-32-SW-H-12B			X													
F1.30	F-A	A-1	3-3410	M/S-12A-32-SW-H-12C			X													
F1.30	F-A	B-D-3-14	3-3410	M/S-12A-33-SW-H&R-12B			X													
F1.30	F-A	B-D-3-14	3-3410	M/S-12A-33-SW-H&R-12C			X													
F1.30	F-A	B-D-3-14	3-3410	M/S-12A-34-SW-H-12B			X													
F1.30	F-A	A-1	3-3410	M/S-12A-34-SW-H-12C			X													
F1.30	F-A	B-D-3-14	3-3410	M/S-12A-35-SW-H&R-12B			X													
F1.30	F-A	B-D-3-14	3-3410	M/S-12A-35-SW-H&R-12C			X													
F1.30	F-A	B-1	3-3410	M/S-12A-36-SW-H-12C			X													
F1.30	F-A	B-1	3-3410	M/S-12A-37-SW-H-12C			X													
F1.30	F-A	B-1	3-3410	M/S-12A-38-SW-H-12C			X													
F1.30	F-A	D-12	3-3410	M/S-12A-39-SW-R-12C			X													
F1.30	F-A	D-12	3-3410	M/S-12A-6-SW-R-12C			X								/					
F1.30	F-A	D-12	3-3410	M/S-12A-6-SW-R-12B			X													
F1.30	F-A	B-1	3-3410	M/S-SW-H-29A-SW-H-12C-R			X													
F1.30	F-A	B-1	3-3410	M/S-SW-H-29B-SW-H-12C-R			X													
F1.30	F-A	A-D-10-14	3-3410	SW-H&R-12B-12			X									/				
F1.30	F-A	B-1-14	3-3410	SW-H-12C-14			X													
F1.30	F-A	A-6	3-3410	SW-H-55			X													
F1.30	F-A	A-8	3-3410	SW-H-62			X													
F1.30	F-A	A-6	3-3410	SW-H-63			X													
F1.30	F-A	A-6	3-3410	SW-H-71			X													
F1.30	F-A	A-6	3-3410	SW-H-73			X													
F1.30	F-A	D-13-14	3-3410	SW-R-12C-13			X													Hydraulic Snubber
F1.30	F-A	D-12	3-3410	SW-R-12C-15			X													
F1.30	F-A	B-D-12	3-3410	SW-R-12C-15A			X													
F1.30	F-A	D-12	3-3410	SW-R-12C-16			X													
F1.30	F-A	B-D-11-14	3-3410	SW-R-12C-17			X									/				
F1.30	F-A	B-D-11	3-3411	M/S-12A-32-SW-H-11A			X													
F1.30	F-A	B-D-11	3-3411	M/S-12A-33-SW-H&R-11A			X													

NSBU COMPONENT SURVEILLANCE SCHEDULE
Westinghouse Proprietary

COMPONENT: CLASS 3 PIPING SUPPORTS

89	89		INT		EXAMINATION METHOD			FIRST INTERVAL			SECOND INTERVAL			THIRD INTERVAL			FOURTH INTERVAL			
ITEM NUMBER	CATEGORY NUMBER	DESCRIPTION	SKETCH NUMBER	IDENT. NUMBER	VOL.	SUR	VIS.	1ST	2ND	3RD	1ST	2ND	3RD	1ST	2ND	3RD	1ST	2ND	3RD	REMARKS
								PERIOD			PERIOD			PERIOD			PERIOD			
F1.30	F-A	B-D-11	3-3411	M/S-12A-34-SW-H-11A			X													
F1.30	F-A	B-D-11	3-3411	M/S-12A-35-SW-H&R-11A			X													
F1.30	F-A	B-D-11	3-3411	M/S-12A-6-SW-R-11A			X													
F1.30	F-A	B-D-11	3-3411	SW-H&R-11A-22			X							/						
F1.30	F-A	B-D-2-14	3-3411	SW-H&R-12A-33			X													
F1.30	F-A	B-D-2-14	3-3411	SW-H&R-12A-39			X													
F1.30	F-A	B-D-11-14	3-3411	SW-H&R-12A-9			X													
F1.30	F-A	A-8-14	3-3411	SW-H-1			X								/					
F1.30	F-A	A-6	3-3411	SW-H-11A-20			X													
F1.30	F-A	A-6	3-3411	SW-H-11A-20A			X													
F1.30	F-A	A-6	3-3411	SW-H-12A-31			X													
F1.30	F-A	A-6	3-3411	SW-H-12A-32			X													
F1.30	F-A	A-6-14	3-3411	SW-H-12A-34			X													
F1.30	F-A	B-1-14	3-3411	SW-H-12A-35			X													
F1.30	F-A	B-1-14	3-3411	SW-H-12A-36			X													
F1.30	F-A	B-1-14	3-3411	SW-H-12A-37			X													
F1.30	F-A	B-1-14	3-3411	SW-H-12A-38			X													
F1.30	F-A	B-D-11-14	3-3411	SW-H-12A-39A			X													
F1.30	F-A	A-6	3-3411	SW-H-3			X													
F1.30	F-A	A-8-14	3-3411	SW-H-43			X							/						
F1.30	F-A	A-6	3-3411	SW-H-44			X													
F1.30	F-A	D-4	3-3411	SW-R-11A-21			X													
F1.30	F-A	D-12	3-3411	SW-R-12A-6			X													
F1.30	F-A	D-13	3-3411	SW-R-12A-7			X													Hydraulic Snubber
F1.30	F-A	D-4	3-3411	SW-R-12A-8			X													
F1.30	F-A	A-6-14	3-3412	M/S-11A-20-SW-H-11B			X													
F1.30	F-A	A-6-14	3-3412	M/S-11A-32-SW-H-11B			X													
F1.30	F-A	A-6-14	3-3412	M/S-11A-34-SW-H-11B			X													
F1.30	F-A	A-6-14	3-3412	M/S-11A-36-SW-H-11B			X													
F1.30	F-A	A-6-14	3-3412	M/S-11A-38-SW-H-11B			X													
F1.30	F-A	B-D-14	3-3412	M/S-12A-33-SW-H&R-11B			X													
F1.30	F-A	B-D-14	3-3412	M/S-12A-35-SW-H&R-11B			X													
F1.30	F-A	B-D-14	3-3412	M/S-12A-37-SW-H&R-11B			X													
F1.30	F-A	B-D-14	3-3412	M/S-12A-39-SW-H&R-11B			X													
F1.30	F-A	D-4	3-3412	M/S-12A-6-SW-R-11B			X													
F1.30	F-A	B-D-11	3-3412	SW-H&R-11B-25			X									/				
F1.30	F-A	A-6-14	3-3412	SW-H&R-91			X								/					
F1.30	F-A	B-1-14	3-3412	SW-H-11B-20B			X													
F1.30	F-A	A-6	3-3412	SW-H-13			X													

NSBU COMPONENT SURVEILLANCE SCHEDULE
Westinghouse Proprietary

COMPONENT: CLASS 3 PIPING SUPPORTS

89	89		INT		EXAMINATION METHOD			FIRST INTERVAL			SECOND INTERVAL			THIRD INTERVAL			FOURTH INTERVAL			
ITEM NUMBER	CATEGORY NUMBER	DESCRIPTION	SKETCH NUMBER	IDENT. NUMBER	VOL.	SUR	VIS.	1ST	2ND	3RD	1ST	2ND	3RD	1ST	2ND	3RD	1ST	2ND	3RD	REMARKS
								PERIOD			PERIOD			PERIOD			PERIOD			
F1.30	F-A	A-8-14	3-3412	SW-H-89			X								/					
F1.30	F-A	A-6	3-3412	SW-H-92-R			X													
F1.30	F-A	D-4	3-3412	SW-R-11B-24			X									/				
F1.30	F-A	D-12	3-3412	SW-R-11D-28			X													
F1.30	F-A	D-4	3-3412	SW-R-11D-29			X													
F1.30	F-A	B-D-11	3-3413	M/S-12E-1-SW-H&R-11E			X													
F1.30	F-A	B-D-11	3-3413	M/S-12E-2-SW-H-11E			X													
F1.30	F-A	B-D-11	3-3413	M/S-12E-3-SW-R-11E			X													
F1.30	F-A	B-D-3	3-3413	SW-H&R-11E-25			X													
F1.30	F-A	B-D-11	3-3413	SW-H&R-11E-31			X							/						
F1.30	F-A	B-D-3-14	3-3413	SW-H&R-11E-40			X													
F1.30	F-A	B-D-3-14	3-3413	SW-H&R-39			X													
F1.30	F-A	A-5	3-3413	SW-H-11E-23			X													
F1.30	F-A	A-8	3-3413	SW-H-35			X							/						
F1.30	F-A	A-5-14	3-3413	SW-H-40			X													
F1.30	F-A	A-5-14	3-3413	SW-H-41			X													
F1.30	F-A	A-5-14	3-3413	SW-H-42A			X													
F1.30	F-A	D-4	3-3413	SW-R-11E-24-G			X													
F1.30	F-A	D-4	3-3413	SW-R-11E-30			X							/						
F1.30	F-A	A-6-14	3-3414	M/S-12A-32-SW-H-11C			X													
F1.30	F-A	B-D-3-14	3-3414	M/S-12A-33-SW-H&R-11C			X													
F1.30	F-A	A-6-14	3-3414	M/S-12A-34-SW-H-11C			X													
F1.30	F-A	B-D-3-14	3-3414	M/S-12A-35-SW-H&R-11C			X													
F1.30	F-A	A-6-14	3-3414	M/S-12A-36-SW-H-11C			X													
F1.30	F-A	B-D-3-14	3-3414	M/S-12A-37-SW-H&R-11C			X													
F1.30	F-A	A-6-14	3-3414	M/S-12A-38-SW-H-11C			X													
F1.30	F-A	B-D-3-14	3-3414	M/S-12A-39-SW-H&R-11C			X													
F1.30	F-A	D-12	3-3414	M/S-12A-6-SW-R-11C			X													
F1.30	F-A	B-D-3-14	3-3414	M/S-12C-14-SW-H&R-11C			X													
F1.30	F-A	B-D-14	3-3414	SW-H&R-11C-27			X								/					
F1.30	F-A	B-1	3-3414	SW-H-11C-27B			X													
F1.30	F-A	A-8-14	3-3414	SW-H-19			X													
F1.30	F-A	A-6	3-3414	SW-H-20			X													
F1.30	F-A	A-6	3-3414	SW-H-27-R			X													
F1.30	F-A	A-6	3-3414	SW-H-29			X													
F1.30	F-A	B-1	3-3414	SW-H-29A			X													
F1.30	F-A	B-11	3-3414	SW-H-29B			X													
F1.30	F-A	D-4	3-3414	SW-R-11C-26			X							/						

NSBU COMPONENT SURVEILLANCE SCHEDULE
Westinghouse Proprietary

COMPONENT: CLASS 3 PIPING SUPPORTS

89	89		INT		EXAMINATION METHOD			FIRST INTERVAL			SECOND INTERVAL			THIRD INTERVAL			FOURTH INTERVAL			
ITEM NUMBER	CATEGORY NUMBER	DESCRIPTION	SKETCH NUMBER	IDENT. NUMBER	VOL.	SUR	VIS.	1ST	2ND	3RD	1ST	2ND	3RD	1ST	2ND	3RD	1ST	2ND	3RD	REMARKS
								PERIOD			PERIOD			PERIOD			PERIOD			
F1.30	F-A	A-D-2	3-3415	M/S-1093-2-SWN-H&R-1096			X													
F1.30	F-A	A-D-2	3-3415	M/S-1093-2-SWN-H&R-1099			X													
F1.30	F-A	A-D-2	3-3415	M/S-1093-3-SWN-H&R-1096			X													
F1.30	F-A	A-D-2	3-3415	M/S-1093-3-SWN-H&R-1099			X													
F1.30	F-A	A-D-2	3-3415	SWN-H&R-1093-2			X													
F1.30	F-A	A-D-2	3-3415	SWN-H&R-1093-3			X													
F1.30	F-A	A-D-2	3-3415	SWN-H&R-1093-4			X													
F1.30	F-A	A-D-2	3-3415	SWN-H&R-1094-1			X													
F1.30	F-A	A-D-2	3-3415	SWN-H&R-1095-1			X													
F1.30	F-A	A-D-2	3-3415	SWN-H&R-1096-2			X									/				
F1.30	F-A	A-D-2	3-3415	SWN-H&R-1097-2			X									/				
F1.30	F-A	A-D-2	3-3415	SWN-H&R-1098-2			X									/				
F1.30	F-A	A-D-2	3-3415	SWN-H&R-1099-1			X													
F1.30	F-A	A-D-2	3-3415	SWN-H&R-1100-1			X													
F1.30	F-A	A-D-2	3-3415	SWN-H&R-1101-1			X													
F1.30	F-A	D-11	3-3415	SWN-R-1093-5			X													
F1.30	F-A	D-11	3-3415	SWN-R-1094-2			X													
F1.30	F-A	D-11	3-3415	SWN-R-1095-2			X													
F1.30	F-A	D-11	3-3415	SWN-R-1096-1			X													
F1.30	F-A	D-11	3-3415	SWN-R-1097-1			X													
F1.30	F-A	A-D-2	3-3415	SWN-R-1098-1			X													
F1.30	F-A	A-D-2	3-3415	SWN-R-1099-2			X													
F1.30	F-A	D-11	3-3415	SWN-R-1100-2			X													
F1.30	F-A	D-11	3-3415	SWN-R-1101-2			X													
F1.30	F-A	A-D-2	3-3416	M/S-1093-1-SWN-H&R-1099			X													
F1.30	F-A	A-D-2	3-3416	SWN-H&R-1093-1			X													
F1.30	F-A	A-D-2	3-3416	SWN-H&R-1096-3			X													
F1.30	F-A	A-D-2	3-3416	SWN-H&R-1096-3A			X													
F1.30	F-A	A-D-2	3-3416	SWN-H&R-1096-4A			X													
F1.30	F-A	A-D-2	3-3416	SWN-H&R-1096-4B			X													
F1.30	F-A	B-D-2	3-3500	AC-H&R-209			X									/				
F1.30	F-A	B-D-11-14	3-3500	AC-H&R-519			X									/				
F1.30	F-A	B-D-2	3-3500	AC-H&R-521			X													
F1.30	F-A	B-D-9-14	3-3500	AC-H&R-523			X													
F1.30	F-A	B-D-11-14	3-3500	AC-H&R-524			X													
F1.30	F-A	B-D-9-14	3-3500	AC-H&R-528			X													
F1.30	F-A	B-D-9-14	3-3500	AC-H&R-529			X													

NSBU COMPONENT SURVEILLANCE SCHEDULE
Westinghouse Proprietary

COMPONENT: CLASS 3 PIPING SUPPORTS

89	89		INT		EXAMINATION METHOD			FIRST INTERVAL			SECOND INTERVAL			THIRD INTERVAL			FOURTH INTERVAL			
ITEM NUMBER	CATEGORY NUMBER	DESCRIPTION	SKETCH NUMBER	IDENT. NUMBER	VOL.	SUR	VIS.	1ST	2ND	3RD	1ST	2ND	3RD	1ST	2ND	3RD	1ST	2ND	3RD	REMARKS
								PERIOD			PERIOD			PERIOD			PERIOD			
F1.30	F-A	B-D-3	3-3500	AC-H&R-530			X													
F1.30	F-A	B-D-9-14	3-3500	AC-H&R-532			X													
F1.30	F-A	B-5	3-3500	AC-H-535			X													
F1.30	F-A	B-5	3-3500	AC-H-536			X													
F1.30	F-A	D-11	3-3500	AC-R-209-1			X									/				
F1.30	F-A	D-4	3-3500	AC-R-211-2			X													
F1.30	F-A	D-4	3-3500	AC-R-520			X													
F1.30	F-A	D-4	3-3500	AC-R-522			X													
F1.30	F-A	D-4	3-3500	AC-R-525			X													
F1.30	F-A	D-4	3-3500	AC-R-527			X													
F1.30	F-A	D-4	3-3500	AC-R-531			X													
F1.30	F-A	D-4	3-3500	AC-R-533			X													
F1.30	F-A	D-3	3-3500	AC-R-534			X													
F1.30	F-A	B-D-3	3-3501	AC-H&R-541			X													
F1.30	F-A	B-D-2	3-3501	AC-H&R-551			X													
F1.30	F-A	A-6	3-3501	AC-H-475			X													
F1.30	F-A	A-8	3-3501	AC-H-537			X													
F1.30	F-A	B-1	3-3501	AC-H-539			X													
F1.30	F-A	B-1	3-3501	AC-H-541A			X													
F1.30	F-A	A-8-14	3-3501	AC-H-542			X							/						
F1.30	F-A	A-8-14	3-3501	AC-H-544			X							/						
F1.30	F-A	A-8-14	3-3501	AC-H-546			X													
F1.30	F-A	B-1	3-3501	AC-H-546			X													
F1.30	F-A	D-11	3-3501	AC-R-168			X													
F1.30	F-A	B-D-12	3-3501	AC-R-52-1A			X													
F1.30	F-A	D-12	3-3501	AC-R-543			X							/						
F1.30	F-A	D-12	3-3501	AC-R-545			X							/						
F1.30	F-A	B-D-3	3-3501	M/S-148-1A-AC-H&R-149			X													
F1.30	F-A	D-4	3-3501	M/S-148-1A-AC-R-149			X													
F1.30	F-A	B-D-2	3-3501	M/S-167-1-AC-H&R-168			X													
F1.30	F-A	B-D-2	3-3501	M/S-167-2-AC-H&R-168			X													
F1.30	F-A	B-D-2	3-3501	M/S-167-3-AC-H&R-168			X													
F1.30	F-A	B-D-2	3-3501	M/S-167-4-AC-H&R-168			X													
F1.30	F-A	B-D-2	3-3501	M/S-515-1-AC-H&R-168			X													
F1.30	F-A	B-1	3-3502	AC-H-14-17			X								/					
F1.30	F-A	B-1	3-3502	AC-H-52-10			X								/					

NSBU COMPONENT SURVEILLANCE SCHEDULE
Westinghouse Proprietary

COMPONENT: CLASS 3 PIPING SUPPORTS

89	89		INT		EXAMINATION METHOD			FIRST INTERVAL			SECOND INTERVAL			THIRD INTERVAL			FOURTH INTERVAL			
ITEM NUMBER	CATEGORY NUMBER	DESCRIPTION	SKETCH NUMBER	IDENT. NUMBER	VOL.	SUR	VIS.	1ST	2ND	3RD	1ST	2ND	3RD	1ST	2ND	3RD	1ST	2ND	3RD	REMARKS
								PERIOD			PERIOD			PERIOD			PERIOD			
F1.30	F-A	B-1	3-3502	AC-H-52-11			X								/					
F1.30	F-A	B-1	3-3502	AC-H-52-12			X													
F1.30	F-A	B-1	3-3502	AC-H-52-13			X													
F1.30	F-A	B-1	3-3502	AC-H-52A-10			X													
F1.30	F-A	B-1	3-3502	AC-H-52A-11			X													
F1.30	F-A	B-1	3-3502	M/S-53-10-AC-H-52A			X													
F1.30	F-A	D-4	3-3502	M/S-53-10-AC-R-52			X													
F1.30	F-A	B-D-3	3-3502	M/S-53-6-AC-H&R-52			X													
F1.30	F-A	B-D-3	3-3502	M/S-53-6-AC-H&R-52A			X													
F1.30	F-A	B-1	3-3502	M/S-53-7-AC-H-52			X													
F1.30	F-A	B-1	3-3502	M/S-53-7-AC-H-A			X													
F1.30	F-A	B-D-3	3-3502	M/S-53-8-AC-H&R-52			X													
F1.30	F-A	B-D-3	3-3502	M/S-53-8-AC-H&R-52A			X													
F1.30	F-A	D-4	3-3502	M/S-53A-5A-AC-R-52A			X													
F1.30	F-A	D-4	3-3502	M/S-53A-5-AC-R-52A			X													
F1.30	F-A	B-D-3	3-3503	AC-H&R-168-4			X													
F1.30	F-A	B-D-3	3-3503	AC-H&R-476A			X								/					
F1.30	F-A	B-D-2	3-3503	AC-H&R-477			X													
F1.30	F-A	B-D-3	3-3503	AC-H&R-516			X								/					
F1.30	F-A	B-D-3	3-3503	AC-H&R-562			X													
F1.30	F-A	A-6	3-3503	AC-H-478			X													
F1.30	F-A	A-6	3-3503	AC-H-479			X													
F1.30	F-A	A-6	3-3503	AC-H-480			X													
F1.30	F-A	A-6	3-3503	AC-H-561			X													
F1.30	F-A	A-6	3-3503	AC-H-563			X													
F1.30	F-A	D-11	3-3503	AC-R-168			X													
F1.30	F-A	D-4	3-3503	AC-R-481			X													
F1.30	F-A	B-D-3	3-3503	M/S-167-5-AC-H&R-168			X													
F1.30	F-A	D-11	3-3503	M/S-515-2-AC-R-516			X													
F1.30	F-A	B-D-3	3-3504	AC-H&R-52-2			X													
F1.30	F-A	B-D-4-14	3-3504	AC-H&R-52-3			X							/						
F1.30	F-A	B-D-4-14	3-3504	AC-H&R-52-5			X													
F1.30	F-A	B-D-12	3-3504	AC-H&R-52A-3			X													
F1.30	F-A	B-D-4-14	3-3504	AC-H&R-52A-5			X													
F1.30	F-A	B-5-14	3-3504	AC-H&R-52A-6			X													
F1.30	F-A	A-8	3-3504	AC-H-52-1			X													
F1.30	F-A	A-8	3-3504	AC-H-52-4			X													
F1.30	F-A	A-8	3-3504	AC-H-52-6			X									/				

NSBU COMPONENT SURVEILLANCE SCHEDULE
Westinghouse Proprietary

COMPONENT: CLASS 3 PIPING SUPPORTS

89	89		INT		EXAMINATION METHOD			FIRST INTERVAL			SECOND INTERVAL			THIRD INTERVAL			FOURTH INTERVAL			
ITEM NUMBER	CATEGORY NUMBER	DESCRIPTION	SKETCH NUMBER	IDENT. NUMBER	VOL.	SUR	VIS.	1ST	2ND	3RD	1ST	2ND	3RD	1ST	2ND	3RD	1ST	2ND	3RD	REMARKS
								PERIOD			PERIOD			PERIOD			PERIOD			
F1.30	F-A	A-8	3-3504	AC-H-52-8			X													
F1.30	F-A	A-6	3-3504	AC-H-52A-1			X													
F1.30	F-A	B-1-14	3-3504	AC-H-52A-4			X													
F1.30	F-A	A-6	3-3504	AC-H-52A-8			X													
F1.30	F-A	A-6	3-3504	AC-H-52A-9			X													
F1.30	F-A	A-6	3-3504	AC-H-89			X									/				
F1.30	F-A	D-13	3-3504	AC-R-52-7			X													
F1.30	F-A	D-13	3-3504	AC-R-52A-2			X													Hydraulic Snubber
F1.30	F-A	D-3	3-3504	AC-R-52A-7			X													
F1.30	F-A	B-D-2	3-3505	AC-H&R-148-1A			X													
F1.30	F-A	B-D-2	3-3505	AC-H&R-167-1			X													
F1.30	F-A	B-D-2	3-3505	AC-H&R-167-2			X													
F1.30	F-A	B-D-2	3-3505	AC-H&R-167-3			X													
F1.30	F-A	B-D-2	3-3505	AC-H&R-167-4			X													
F1.30	F-A	B-D-2	3-3505	AC-H&R-515-72			X													
F1.30	F-A	B-D-2	3-3505	AC-H&R-53-2			X													
F1.30	F-A	B-D-3	3-3505	AC-H&R-53-3			X													
F1.30	F-A	B-D-2	3-3505	AC-H&R-53-4			X													
F1.30	F-A	B-D-3	3-3505	AC-H&R-53-5			X													
F1.30	F-A	B-D-2	3-3505	AC-H&R-53A-1			X													
F1.30	F-A	B-D-2	3-3505	AC-H&R-53A-3			X													
F1.30	F-A	D-4	3-3505	AC-R-148-1B			X													
F1.30	F-A	D-11	3-3505	AC-R-167			X													
F1.30	F-A	D-4	3-3505	AC-R-53-1			X								/					
F1.30	F-A	D-11	3-3505	AC-R-53A-2			X								/					
F1.30	F-A	B-D-2	3-3505	M/S-167-1-AC-H&R-148			X													
F1.30	F-A	B-D-2	3-3505	M/S-53-5-AC-H&R-53A			X													
F1.30	F-A	B-D-2	3-3506	AC-H&R-148-2			X													
F1.30	F-A	B-D-2	3-3506	AC-H&R-148-3			X													
F1.30	F-A	B-D-2	3-3506	AC-H&R-148-4			X													
F1.30	F-A	B-D-2	3-3506	AC-H&R-167-5			X													
F1.30	F-A	B-D-2	3-3506	AC-H&R-167-6			X													
F1.30	F-A	B-D-12	3-3506	AC-H&R-515-1			X								/					
F1.30	F-A	B-D-2	3-3506	AC-H&R-515-4			X													
F1.30	F-A	B-D-2	3-3506	AC-H&R-515-5			X													
F1.30	F-A	B-D-2	3-3506	AC-H&R-515-6			X													
F1.30	F-A	A-6	3-3506	AC-H-148-5			X													
F1.30	F-A	A-6	3-3506	AC-H-515-3			X													

NSBU COMPONENT SURVEILLANCE SCHEDULE
Westinghouse Proprietary

COMPONENT: CLASS 3 PIPING SUPPORTS

89	89		INT		EXAMINATION METHOD			FIRST INTERVAL			SECOND INTERVAL			THIRD INTERVAL			FOURTH INTERVAL			
ITEM NUMBER	CATEGORY NUMBER	DESCRIPTION	SKETCH NUMBER	IDENT. NUMBER	VOL.	SUR	VIS.	1ST	2ND	3RD	1ST	2ND	3RD	1ST	2ND	3RD	1ST	2ND	3RD	REMARKS
								PERIOD			PERIOD			PERIOD			PERIOD			
F1.30	F-A	D-11	3-3506	AC-R-167			X													
F1.30	F-A	D-11	3-3506	AC-R-515-2			X													
F1.30	F-A	B-D-2	3-3507	AC-H&R-53-11			X													
F1.30	F-A	B-D-2	3-3507	AC-H&R-53-12			X													
F1.30	F-A	B-D-2	3-3507	AC-H&R-53-13			X													
F1.30	F-A	B-D-3	3-3507	AC-H&R-53-6			X													
F1.30	F-A	B-D-2	3-3507	AC-H&R-53-7			X													
F1.30	F-A	B-D-2	3-3507	AC-H&R-53-8			X									/				
F1.30	F-A	B-D-2	3-3507	AC-H&R-53-9			X									/				
F1.30	F-A	B-D-2	3-3507	AC-H&R-53A-4			X													
F1.30	F-A	D-4	3-3507	AC-H&R-53A-7			X													
F1.30	F-A	D-4	3-3507	AC-R-53-10			X													
F1.30	F-A	D-4	3-3507	AC-R-53A-5			X													
F1.30	F-A	B-D-2	3-3507	M/S-53-10-AC-H&R-53A			X													
F1.30	F-A	B-D-2	3-3507	M/S-53-6-AC-H&R-53A			X													
F1.30	F-A	B-D-2	3-3507	M/S-53-7-AC-H&R-53A			X													
F1.30	F-A	B-D-2	3-3507	M/S-53-8-AC-H&R-53A			X													
F1.30	F-A	B-D-2	3-3508	AC-H&R-53-17C			X													
F1.30	F-A	B-D-2	3-3508	AC-H&R-53-19			X													
F1.30	F-A	B-1	3-3508	AC-H-53-15			X													
F1.30	F-A	B-1	3-3508	AC-H-53-17			X													
F1.30	F-A	A-8	3-3508	AC-H-53-20			X							/						
F1.30	F-A	A-6	3-3508	AC-H-53A-12			X													
F1.30	F-A	A-8	3-3508	AC-H-53A-13			X							/						
F1.30	F-A	D-12	3-3508	AC-H-53A-14			X													
F1.30	F-A	A-6	3-3508	AC-H-53A-8			X													
F1.30	F-A	A-6	3-3508	AC-H-53A-9			X													
F1.30	F-A	A-6	3-3508	AC-H-93			X													
F1.30	F-A	B-1	3-3508	AC-H-95			X													
F1.30	F-A	D-4	3-3508	AC-R-17B			X													
F1.30	F-A	D-4	3-3508	AC-R-53-16			X													
F1.30	F-A	D-4	3-3508	AC-R-53-17A			X													
F1.30	F-A	D-4	3-3508	AC-R-53-18			X													
F1.30	F-A	D-12	3-3508	AC-R-53-21			X													
F1.30	F-A	B-4	3-3508	AC-R-53-22			X													
F1.30	F-A	D-4	3-3508	AC-R-53A-11			X													Hydraulic Snubber
F1.30	F-A	B-D-12	3-3508	M/S-52A-3-AC-H&R-53A			X													
F1.30	F-A	B-D-12	3-3508	M/S-52A-4-AC-H&R-53A			X													

NSBU COMPONENT SURVEILLANCE SCHEDULE
Westinghouse Proprietary

COMPONENT: CLASS 3 PIPING SUPPORTS

89	89		INT		EXAMINATION METHOD			FIRST INTERVAL			SECOND INTERVAL			THIRD INTERVAL			FOURTH INTERVAL			
ITEM NUMBER	CATEGORY NUMBER	DESCRIPTION	SKETCH NUMBER	IDENT. NUMBER	VOL.	SUR	VIS.	1ST	2ND	3RD	1ST	2ND	3RD	1ST	2ND	3RD	1ST	2ND	3RD	REMARKS
								PERIOD			PERIOD			PERIOD			PERIOD			
F1.30	F-A	B-D-12	3-3508	M/S-52A-5-AC-H&R-53A			X													
F1.30	F-A	B-D-12	3-3508	M/S-52A-6-AC-H&R-53A			X													
F1.30	F-A	B-D-12	3-3508	M/S-52A-7-AC-H&R-53A			X													
F1.30	F-A	B-D-2	3-3509	AC-H&R-13-2			X													
F1.30	F-A	B-1	3-3509	AC-H-13-1			X													
F1.30	F-A	B-1-14	3-3509	AC-H-13-3B			X							/						
F1.30	F-A	A-6	3-3509	AC-H-14-12			X													
F1.30	F-A	D-4	3-3509	AC-R-13-3A			X													
F1.30	F-A	B-1	3-3509	M/S-13-1-AC-H-14			X													
F1.30	F-A	B-1	3-3509	M/S-13-2-AC-H-14			X													
F1.30	F-A	D-3	3-3509	M/S-13-3A-AC-R-14			X													
F1.30	F-A	B-1-14	3-3509	M/S-13-3B-AC-H-14			X													
F1.30	F-A	B-D-2	3-3509	M/S-525-14-AC-H&R-13			X							/						
F1.30	F-A	B-D-2	3-3509	M/S-525-14-AC-H&R-14			X													
F1.30	F-A	B-D-2	3-3600	AC-H&R-327-1			X													
F1.30	F-A	B-D-2	3-3600	AC-H&R-327-30			X								/					
F1.30	F-A	B-D-2	3-3600	AC-H&R-327-8			X													
F1.30	F-A	B-D-2	3-3600	AC-H&R-328-1			X													
F1.30	F-A	B-D-2	3-3600	AC-H&R-328-2			X													
F1.30	F-A	B-D-2	3-3600	AC-H&R-328-4			X													
F1.30	F-A	B-D-2	3-3600	AC-H&R-328-4A			X													
F1.30	F-A	B-D-2	3-3600	AC-H&R-328-7			X													
F1.30	F-A	B-D-2	3-3600	AC-H&R-328-8			X													
F1.30	F-A	B-1	3-3600	AC-H-328-5			X													
F1.30	F-A	B-1	3-3600	AC-H-328-6			X													
F1.30	F-A	B-1	3-3600	AC-H-328-9			X													
F1.30	F-A	D-11	3-3600	AC-R-328-10			X													
F1.30	F-A	D-4	3-3600	AC-R-328-3			X													
F1.30	F-A	B-1	3-3600	H1			X								/					
F1.30	F-A	D-12	3-3600	SFPC-R-2			X													
F1.30	F-A	D-11	3-3600	SFPC-R-3			X													
F1.30	F-A	D-11	3-3600	SFPC-R-5			X													
F1.30	F-A	B-1	3-3600	SFPC-R-6			X													
F1.30	F-A	A-8	3-3600	SFPC-V-12			X													
F1.30	F-A	B-5	3-3600	SFPC-V-15			X													
F1.30	F-A	B-D-3	3-3601	AC-H&R-325-1			X													
F1.30	F-A	B-D-3	3-3601	AC-H&R-325-2			X													

NSBU COMPONENT SURVEILLANCE SCHEDULE
Westinghouse Proprietary

COMPONENT: CLASS 3 PIPING SUPPORTS

89	89		INT		EXAMINATION METHOD			FIRST INTERVAL			SECOND INTERVAL			THIRD INTERVAL			FOURTH INTERVAL			
ITEM NUMBER	CATEGORY NUMBER	DESCRIPTION	SKETCH NUMBER	IDENT. NUMBER	VOL.	SUR	VIS.	1ST	2ND	3RD	1ST	2ND	3RD	1ST	2ND	3RD	1ST	2ND	3RD	REMARKS
								PERIOD			PERIOD			PERIOD			PERIOD			
F1.30	F-A	B-D-3	3-3601	AC-H&R-325-3			X													
F1.30	F-A	B-D-3	3-3601	AC-H&R-326-1			X													
F1.30	F-A	B-D-2	3-3601	AC-H&R-329-1			X													
F1.30	F-A	B-D-3	3-3601	AC-H&R-329-2			X													
F1.30	F-A	B-D-12-14	3-3601	AC-H&R-329-4			X							/						
F1.30	F-A	B-D-3	3-3601	AC-H&R-329-9			X								/					
F1.30	F-A	D-11	3-3601	AC-R-329-3			X													
F1.30	F-A	D-12	3-3601	AC-R-329-6			X													
F1.30	F-A	D-12	3-3601	SFPC-R-8			X													
F1.30	F-A	B-1	3-3601	SFPC-R-9			X													
F1.30	F-A	A-6	3-3601	SFPC-V-13			X													
F1.30	F-A	A-6	3-3601	SFPC-V-14			X													
F1.30	F-A	B-D-2	3-3700	CT-H&R-1070-1			X									/				
F1.30	F-A	B-D-2	3-3700	CT-H&R-1071-2			X													
F1.30	F-A	B-D-2	3-3700	CT-H&R-1071-6			X													
F1.30	F-A	B-1-14	3-3700	CT-H-1071-1			X													
F1.30	F-A	D-11	3-3700	CT-R-1071-3			X													
F1.30	F-A	B-1-14	3-3700	CT-H-1071-4			X													
F1.30	F-A	B-1-14	3-3700	CT-H-1071-7			X									/				
F1.30	F-A	D-11	3-3700	CT-R-1071-2			X													
F1.30	F-A	B-D-2	3-3700	M/S-1080-10			X													
F1.30	F-A	B-D-2	3-3700	M/S-1080-11			X													
F1.30	F-A	B-D-2	3-3700	M/S-1080-12			X													
F1.30	F-A	B-D-2	3-3700	M/S-1080-13			X									/				
F1.30	F-A	B-D-2	3-3700	M/S-1080-5			X													
F1.30	F-A	B-D-2	3-3700	M/S-1080--6			X													
F1.30	F-A	B-D-2	3-3700	M/S-1080-7			X													
F1.30	F-A	B-D-2	3-3700	M/S-1080-8			X													
F1.30	F-A	B-D-2	3-3700	M/S-1080-9			X													
F1.30	F-A	B-D-2	3-3701	CT-H&R-1072-1			X													
F1.30	F-A	B-D-2	3-3701	CT-H&R-1072-3			X													
F1.30	F-A	B-D-2	3-3701	CT-H&R-1073-1			X													
F1.30	F-A	B-D-2	3-3701	CT-H&R-1073-3			X													
F1.30	F-A	B-D-2	3-3701	CT-H&R-1074-4A			X													
F1.30	F-A	B-D-2	3-3701	CT-H&R-1075-2A			X													
F1.30	F-A	B-1-14	3-3701	CT-H-1072-5			X									/				
F1.30	F-A	B-1-14	3-3701	CT-H-1073-5			X													
F1.30	F-A	D-11	3-3701	CT-R-1072-2			X													

NSBU COMPONENT SURVEILLANCE SCHEDULE
Westinghouse Proprietary

COMPONENT: CLASS 3 PIPING SUPPORTS

89	89		INT		EXAMINATION METHOD			FIRST INTERVAL			SECOND INTERVAL			THIRD INTERVAL			FOURTH INTERVAL			
ITEM NUMBER	CATEGORY NUMBER	DESCRIPTION	SKETCH NUMBER	IDENT. NUMBER	VOL.	SUR	VIS.	1ST	2ND	3RD	1ST	2ND	3RD	1ST	2ND	3RD	1ST	2ND	3RD	REMARKS
								PERIOD			PERIOD			PERIOD			PERIOD			
F1.30	F-A	D-11	3-3701	CT-R-1072-4			X													
F1.30	F-A	D-11	3-3701	CT-R-1073-2			X													
F1.30	F-A	D-11	3-3701	CT-R-1073-4			X													
F1.30	F-A		3-3701	M/S-1071-2			X													
F1.30	F-A		3-3701	M/S-1074-2			X													
F1.30	F-A	D-4	3-3702	M/S-1016-2-V-R-1017			X													
F1.30	F-A	D-4	3-3702	M/S-1016-V-R-1017			X													
F1.30	F-A	C-10	3-3702	V-A-1016-1			X													
F1.30	F-A	D-4	3-3702	V-A-1017-2			X													
F1.30	F-A	B-5-14	3-3702	V-H-1017-1			X									/				
F1.30	F-A	D-4	3-3702	V-H-1017-3			X													
F1.30	F-A	D-4	3-3702	V-R-1016-2			X													
F1.30	F-A	D-4	3-3702	V-R-1016-3			X													
F1.30	F-A	B-D-11	3-3703	BFD-R-1003-7			X													
F1.30	F-A	B-D-3	3-3703	BFD-H&R-1003-2			X													
F1.30	F-A	B-D-2	3-3703	BFD-H&R-1003-4B			X													
F1.30	F-A	B-D-2	3-3703	BFD--H&R-1003-4D			X													
F1.30	F-A	B-D-2	3-3703	BFD-H&R-1003-4F			X													
F1.30	F-A	B-D-2	3-3703	BFD-H&R-1003-4G			X													
F1.30	F-A	B-D-2	3-3703	BFD-H&R-1003-5			X													
F1.30	F-A	B-D-2	3-3703	BFD-H&R-1003-6			X													
F1.30	F-A	B-D-2	3-3703	BFD-H&R-1003-8			X													
F1.30	F-A	B-D-2	3-3703	BFD-H&R-1005-2			X													
F1.30	F-A	B-D-2	3-3703	BFD-H&R-1005-3			X													
F1.30	F-A	B-D-2	3-3703	BFD-H&R-1005-4B			X													
F1.30	F-A	B-D-2	3-3703	BFD-H&R-1005-4D			X													
F1.30	F-A	B-D-2	3-3703	BFD-H&R-1005-4F			X													
F1.30	F-A	B-D-2	3-3703	BFD-H&R-1005-5			X													
F1.30	F-A	B-D-2	3-3703	BFD-H&R-1005-7			X													
F1.30	F-A	B-1-14	3-3703	BFD-H-1003-1A			X							/						
F1.30	F-A	B-1	3-3703	BFD-H-1003-4C			X													
F1.30	F-A	B-1	3-3703	BFD-H-1003-4E			X													
F1.30	F-A	A-6	3-3703	BFD-H-1003-9			X													
F1.30	F-A	B1	3-3703	BFD-H-1005-1A			X							/						
F1.30	F-A	B-1	3-3703	BFD-H-1005-4C			X													
F1.30	F-A	B-1	3-3703	BFD-H-1005-4E			X													
F1.30	F-A	D-11	3-3703	BFD-R-1003-10			X													
F1.30	F-A	D-11	3-3703	BFD-R-1003-1B			X													

NSBU COMPONENT SURVEILLANCE SCHEDULE
Westinghouse Proprietary

COMPONENT: CLASS 3 PIPING SUPPORTS

89	89		INT		EXAMINATION METHOD			FIRST INTERVAL			SECOND INTERVAL			THIRD INTERVAL			FOURTH INTERVAL			
ITEM NUMBER	CATEGORY NUMBER	DESCRIPTION	SKETCH NUMBER	IDENT. NUMBER	VOL.	SUR	VIS.	1ST	2ND	3RD	1ST	2ND	3RD	1ST	2ND	3RD	1ST	2ND	3RD	REMARKS
								PERIOD			PERIOD			PERIOD			PERIOD			
F1.30	F-A	D-11	3-3703	BFD-R-1003-3			X													
F1.30	F-A	D-11	3-3703	BFD-R-1003-4A			X													
F1.30	F-A	D-11	3-3703	BFD-R-1003-4H			X													
F1.30	F-A	D-11	3-3703	BFD-R-1005-1B			X													
F1.30	F-A	D-11	3-3703	BFD-R-1005-4A			X													
F1.30	F-A	D-11	3-3703	BFD-R-1005-4G			X													
F1.30	F-A	D-11	3-3703	BFD-R-1005-6			X													
F1.30	F-A	B-D-2	3-3704	BFD-H&R-1002-10			X													
F1.30	F-A	B-D-2	3-3704	BFD-H&R-1002-11			X													
F1.30	F-A	B-D-2	3-3704	BFD-H&R-1002-1B			X													
F1.30	F-A	B-D-2	3-3704	BFD-H&R-1002-1D			X													
F1.30	F-A	B-D-2	3-3704	BFD-H&R-1002-1F			X													
F1.30	F-A	B-D-2	3-3704	BFD-H&R-1002-1G			X													
F1.30	F-A	B-D-2	3-3704	BFD-H&R-1002-2			X													
F1.30	F-A	B-D-2	3-3704	BFD-H&R-1002-3			X													
F1.30	F-A	B-D-2	3-3704	BFD-H&R-1002-3			X													
F1.30	F-A	B-D-2	3-3704	BFD-H&R-1002-4			X													
F1.30	F-A	B-D-2	3-3704	BFD-H&R-1002-5			X													
F1.30	F-A	B-D-2	3-3704	BFD-H&R-1002-8			X													
F1.30	F-A	B-D-2	3-3704	BFD-H&R-1002-8A			X								/					
F1.30	F-A	B-D-2	3-3704	BFD-H&R-1008-1			X													
F1.30	F-A	B-D-2	3-3704	BFD-H&R-1008-2B			X													
F1.30	F-A	B-D-2	3-3704	BFD-H&R-1008-2D			X													
F1.30	F-A	B-D-2	3-3704	BFD-H&R-1008-2F			X													
F1.30	F-A	B-D-2	3-3704	BFD-H&R-1008-3B			X													
F1.30	F-A	A-8	3-3704	BFD-H-1002-12			X													
F1.30	F-A	B-1	3-3704	BFD-H-1002-1C			X													
F1.30	F-A	B-1	3-3704	BFD-H-1002-1E			X													
F1.30	F-A	B-1	3-3704	BFD-H-1002-6			X													
F1.30	F-A	B-1	3-3704	BFD-H-1002-9			X								/					
F1.30	F-A	B-1	3-3704	BFD-H-1008-2C			X													
F1.30	F-A	B-1	3-3704	BFD-H-1008-2E			X													
F1.30	F-A	D-11	3-3704	BFD-R-1002-13			X													
F1.30	F-A	D-11	3-3704	BFD-R-1002-1H			X													
F1.30	F-A	D-11	3-3704	BFD-R-1002-7			X													
F1.30	F-A	D-11	3-3704	BFD-R-1002-1A			X													
F1.30	F-A	D-11	3-3704	BFD-R-1008-2A			X													
F1.30	F-A	D-11	3-3704	BFD-R-1008-2G			X													
F1.30	F-A	D-11	3-3704	BFD-R-1008-3A			X													

NSBU COMPONENT SURVEILLANCE SCHEDULE
Westinghouse Proprietary

COMPONENT: CLASS 3 PIPING SUPPORTS

89	89		INT		EXAMINATION METHOD			FIRST INTERVAL			SECOND INTERVAL			THIRD INTERVAL			FOURTH INTERVAL			
ITEM NUMBER	CATEGORY NUMBER	DESCRIPTION	SKETCH NUMBER	IDENT. NUMBER	VOL.	SUR	VIS.	1ST	2ND	3RD	1ST	2ND	3RD	1ST	2ND	3RD	1ST	2ND	3RD	REMARKS
								PERIOD			PERIOD			PERIOD			PERIOD			
F1.30	F-A	B-D-2	3-3705	BFD-H&R-1001-3			X													
F1.30	F-A	B-D-2	3-3705	BFD-H&R-1001-4			X													
F1.30	F-A	B-D-2	3-3705	BFD-H&R-1001-5B			X													
F1.30	F-A	B-D-2	3-3705	BFD-H&R-1001-5D			X													
F1.30	F-A	B-D-2	3-3705	BFD-H&R-1001-5F			X													
F1.30	F-A	B-D-2	3-3705	BFD-H&R-1001-5G			X													
F1.30	F-A	B-D-2	3-3705	BFD-H&R-1001-7			X													
F1.30	F-A	B-D-2	3-3705	BFD-H&R-1001-8			X													
F1.30	F-A	B-D-2	3-3705	BFD-H&R-1007-1			X													
F1.30	F-A	B-D-2	3-3705	BFD-H&R-1007-2B			X													
F1.30	F-A	B-D-2	3-3705	BFD-H&R-1007-2D			X													
F1.30	F-A	B-D-2	3-3705	BFD-H&R-1007-2F			X													
F1.30	F-A	B-D-2	3-3705	BFD-H&R-1007-3			X													
F1.30	F-A	B-D-2	3-3705	BFD-H&R-1007-5			X													
F1.30	F-A	D-11	3-3705	BFD-H-1001-1B			X													
F1.30	F-A	B-1	3-3705	BFD-H-1001-5C			X									/				
F1.30	F-A	B-1	3-3705	BFD-H-1001-5E			X													
F1.30	F-A	B-1	3-3705	BFD-H-1007-2C			X													
F1.30	F-A	B-1	3-3705	BFD-H-1007-2E			X													
F1.30	F-A	B-1-14	3-3705	BFD-R-1001-1A			X													
F1.30	F-A	B-11	3-3705	BFD-R-1001-5A			X													
F1.30	F-A	D	3-3705	BFD-R-1001-5H			X													
F1.30	F-A	D-11	3-3705	BFD-R-1007-2A			X													
F1.30	F-A	D	3-3705	BFD-R-1007-2G			X													
F1.30	F-A	D-4	3-3705	BFD-R-1007-4			X													
F1.30	F-A	B-D-2	3-3706	BFD-H&R-1004-1B			X									/				
F1.30	F-A	B-D-2	3-3706	BFD-H&R-1004-1D			X													
F1.30	F-A	B-D-2	3-3706	BFD-H&R-1004-1F			X													
F1.30	F-A	B-D-2	3-3706	BFD-H&R-1004-1G			X									/				
F1.30	F-A	B-D-2	3-3706	BFD-H&R-1004-2			X													
F1.30	F-A	B-D-2	3-3706	BFD-H&R-1004-3			X													
F1.30	F-A	B-D-2	3-3706	BFD-H&R-1004-4			X													
F1.30	F-A	B-D-2	3-3706	BFD-H&R-1006-1B			X													
F1.30	F-A	B-D-2	3-3706	BFD-H&R-1006-1D			X													
F1.30	F-A	B-D-2	3-3706	BFD-H&R-1006-1F			X													
F1.30	F-A	B-D-2	3-3706	BFD-H&R-1006-2			X													
F1.30	F-A	B-D-2	3-3706	BFD-H&R-1006-3			X													
F1.30	F-A	B-D-2	3-3706	BFD-H&R-1006-4B			X													

NSBU COMPONENT SURVEILLANCE SCHEDULE
Westinghouse Proprietary

COMPONENT: CLASS 3 PIPING SUPPORTS

89	89		INT		EXAMINATION METHOD			FIRST INTERVAL			SECOND INTERVAL			THIRD INTERVAL			FOURTH INTERVAL			
ITEM NUMBER	CATEGORY NUMBER	DESCRIPTION	SKETCH NUMBER	IDENT. NUMBER	VOL.	SUR	VIS.	1ST	2ND	3RD	1ST	2ND	3RD	1ST	2ND	3RD	1ST	2ND	3RD	REMARKS
								PERIOD			PERIOD			PERIOD			PERIOD			
F1.30	F-A	B-1	3-3706	BFD-H-1004-1C			X													
F1.30	F-A	B-1	3-3706	BFD-H-1004-1E			X													
F1.30	F-A	B-1	3-3706	BFD-H-1006-1C			X													
F1.30	F-A	B-1	3-3706	BFD-H-1006-1E			X													
F1.30	F-A	D-11	3-3706	BFD-R-1004-1A			X													
F1.30	F-A	D-11	3-3706	BFD-R-1004-1H			X													
F1.30	F-A	D-11	3-3706	BFD-R-1006-1A			X													
F1.30	F-A	D-11	3-3706	BFD-R-1006-1G			X													
F1.30	F-A	D-11	3-3706	BFD-R-1006-4A			X													
F1.30	F-A	B-D-2	3-3707	BFD-H&R-1001-10			X													
F1.30	F-A	B-D-2	3-3707	BFD-H&R-1001-10A			X													
F1.30	F-A	B-D-2	3-3707	BFD-H&R-1001-11			X													
F1.30	F-A	B-D-2	3-3707	BFD-H&R-1001-12			X													
F1.30	F-A	B-D-2	3-3707	BFD-H&R-1001-9			X													
F1.30	F-A	D-4	3-3707	BFD-H-1001-14			X													
F1.30	F-A	A-8	3-3707	BFD-R-1001-13			X													
F1.30	F-A	B-D-2	3-3708	BFD-H&R-1004-6			X													
F1.30	F-A	B-D-2	3-3708	BFD-H&R-1004-7			X													
F1.30	F-A	B-8	3-3708	BFD-H-1004-9			X													
F1.30	F-A	D-11	3-3708	BFD-R-1004-5			X													
F1.30	F-A	D-11	3-3708	BFD-R-1004-8			X													
TOTAL ID'S FOR F1.30				675	0	0	675	TOTAL SCHEDULED						24	24	26				
								TOTAL COMPLETED						0	0	0				

NSBU COMPONENT SURVEILLANCE SCHEDULE
Westinghouse Proprietary

COMPONENT: SUPPORTS OTHER THAN PIPING, CLASS 1, 2 and 3

89	89		INT		EXAMINATION METHOD			FIRST INTERVAL			SECOND INTERVAL			THIRD INTERVAL			FOURTH INTERVAL			
ITEM NUMBER	CATEGORY NUMBER	DESCRIPTION	SKETCH NUMBER	IDENT. NUMBER	VOL.	SUR	VIS.	1ST	2ND	3RD	1ST	2ND	3RD	1ST	2ND	3RD	1ST	2ND	3RD	REMARKS
								PERIOD			PERIOD			PERIOD			PERIOD			
F1.40	F-A		1-2100	SUPPORT			X								/					
F1.40	F-A		1-5100	31 SUPPORT			X							/						
F1.40	F-A			32 SUPPORT			X													
F1.40	F-A			33 SUPPORT			X													
F1.40	F-A			34 SUPPORT			X													
F1.40	F-A		2-1101	31 SUPPORT			X								/					
F1.40	F-A			32 SUPPORT			X													
F1.40	F-A			33 SUPPORT			X													
F1.40	F-A			34 SUPPORT			X													
F1.40	F-A		2-1110	31 SUPPORT			X									/				
F1.40	F-A		2-1120	31 SUPPORT			X							/						
F1.40	F-A			32 SUPPORT			X													
F1.40	F-A		2-1300	31 SUPPORT			X								/					
F1.40	F-A		2-1300	32 SUPPORT			X													
F1.40	F-A		2-3100	31 SUPPORT			X													
F1.40	F-A		2-3100	32 SUPPORT			X									/				
F1.40	F-A		2-3110	31 SUPPORT			X									/				
F1.40	F-A		2-3110	32 SUPPORT			X													
F1.40	F-A		2-3110	33 SUPPORT			X													
F1.40	F-A		2-3130	31 SUPPORT			X									/				
F1.40	F-A		2-3130	32 SUPPORT			X													
F1.40	F-A		2-3130	33 SUPPORT			X													
F1.40	F-A		3-1100	31 SUPPORT			X							/						
F1.40	F-A		3-1100	32 SUPPORT			X													
F1.40	F-A		3-1110	31 SUPPORT			X							/						
F1.40	F-A		3-1120	31 SUPPORT			X							/						
F1.40	F-A		3-1150	31 SUPPORT			X								/					

NSBU COMPONENT SURVEILLANCE SCHEDULE

COMPONENT: SUPPORTS OTHER THAN PIPING, CLASS 1, 2 and 3

89	89		INT		EXAMINATION METHOD			FIRST INTERVAL			SECOND INTERVAL			THIRD INTERVAL			FOURTH INTERVAL			
ITEM NUMBER	CATEGORY NUMBER	DESCRIPTION	SKETCH NUMBER	IDENT. NUMBER	VOL.	SUR	VIS.	1ST	2ND	3RD	1ST	2ND	3RD	1ST	2ND	3RD	1ST	2ND	3RD	REMARKS
								PERIOD			PERIOD			PERIOD			PERIOD			
F1.40	F-A		3-1160	31 SUPPORT			X							/						
F1.40	F-A		3-1160	32 SUPPORT			X													
F1.40	F-A		3-1160	33 SUPPORT			X													
F1.40	F-A		3-1190	31 SUPPORT			X							/						
F1.40	F-A		3-1190	32 SUPPORT			X													
F1.40	F-A		3-1500	31 SUPPORT			X								/					
F1.40	F-A		3-1500	32 SUPPORT			X													
F1.40	F-A		3-1500	33 SUPPORT			X													
F1.40	F-A		3-1510	34 SUPPORT			X													
F1.40	F-A		3-1510	35 SUPPORT			X													
F1.40	F-A		3-1520	31 SUPPORT			X							/						
F1.40	F-A		3-1520	32 SUPPORT			X													
F1.40	F-A		3-1520	33 SUPPORT			X													
F1.40	F-A		3-1530	31 SUPPORT			X									/				
F1.40	F-A		3-1530	32 SUPPORT			X													
F1.40	F-A		3-1530	33 SUPPORT			X													
F1.40	F-A		3-1540	31 SUPPORT			X									/				
F1.40	F-A		3-1540	32 SUPPORT			X													
F1.40	F-A		3-4100	34 SUPPORT			X									/				
F1.40	F-A		3-4100	35 SUPPORT			X													
F1.40	F-A		3-4100	36 SUPPORT			X													
F1.40	F-A		3-4110	31 SUPPORT			X									/				
F1.40	F-A		3-4110	32 SUPPORT			X													
F1.40	F-A		3-4110	33 SUPPORT			X													
F1.40	F-A		3-4120	31 SUPPORT			X								/					
F1.40	F-A		3-4120	32 SUPPORT			X													
F1.40	F-A		3-4130	31 SUPPORT			X								/					

NSBU COMPONENT SURVEILLANCE SCHEDULE
Westinghouse Proprietary

COMPONENT: SUPPORTS OTHER THAN PIPING, CLASS 1, 2 and 3

89	89		INT		EXAMINATION METHOD			FIRST INTERVAL			SECOND INTERVAL			THIRD INTERVAL			FOURTH INTERVAL			
ITEM NUMBER	CATEGORY NUMBER	DESCRIPTION	SKETCH NUMBER	IDENT. NUMBER	VOL.	SUR	VIS.	1ST	2ND	3RD	1ST	2ND	3RD	1ST	2ND	3RD	1ST	2ND	3RD	REMARKS
								PERIOD			PERIOD			PERIOD			PERIOD			
F1.40	F-A		3-4130	32 SUPPORT			X													
F1.40	F-A		3-4130	33 SUPPORT			X													
F1.40	F-A		3-4140	31 SUPPORT			X								/					
F1.40	F-A		3-4140	33 SUPPORT			X													
F1.40	F-A		3-4150	32 SUPPORT			X													
F1.40	F-A		3-4160	31 SUPPORT			X									/				
F1.40	F-A		3-4160	32 SUPPORT			X													
F1.40	F-A		3-4160	33 SUPPORT			X													
F1.40	F-A		3-4160	34 SUPPORT			X													
F1.40	F-A		3-4170	31 SUPPORT			X								/					
F1.40	F-A		3-4170	32 SUPPORT			X													
F1.40	F-A		3-4180	34 SUPPORT			X									/				
F1.40	F-A		3-4180	35 SUPPORT			X													
F1.40	F-A		3-4180	36 SUPPORT			X													
F1.40	F-A		3-4190	31 SUPPORT			X							/						
F1.40	F-A		3-4190	32 SUPPORT			X													
F1.40	F-A		3-4190	33 SUPPORT			X													
TOTAL ID'S FOR F1.40				71	0	0	71	TOTAL SCHEDULED						9	9	10				
								TOTAL COMPLETED						0	0	0				

NSBU COMPONENT SURVEILLANCE SCHEDULE
Westinghouse Proprietary

COMPONENT: *** CLASS TOTALS FOR IWF ***

89	89		INT		EXAMINATION METHOD			FIRST INTERVAL			SECOND INTERVAL			THIRD INTERVAL			FOURTH INTERVAL			
ITEM NUMBER	CATEGORY NUMBER	DESCRIPTION	SKETCH NUMBER	IDENT. NUMBER	VOL.	SUR	VIS.	1ST	2ND	3RD	1ST	2ND	3RD	1ST	2ND	3RD	1ST	2ND	3RD	REMARKS
								PERIOD			PERIOD			PERIOD			PERIOD			
								TOTAL SCHEDULED						56	56	60				
CLASS TOTALS				1122	0	0	1122	TOTAL COMPLETED						0	0	0				

NSBU COMPONENT SURVEILLANCE SCHEDULE

Westinghouse Proprietary

COMPONENT:

89	89		INT		EXAMINATION METHOD			FIRST INTERVAL			SECOND INTERVAL			THIRD INTERVAL			FOURTH INTERVAL			
ITEM NUMBER	CATEGORY NUMBER	DESCRIPTION	SKETCH NUMBER	IDENT. NUMBER	VOL.	SUR	VIS.	1ST	2ND	3RD	1ST	2ND	3RD	1ST	2ND	3RD	1ST	2ND	3RD	REMARKS
								PERIOD			PERIOD			PERIOD			PERIOD			
TOTAL ID'S FOR				0	0	0	0	TOTAL SCHEDULED						0	0	0				
								TOTAL COMPLETED						0	0	0				

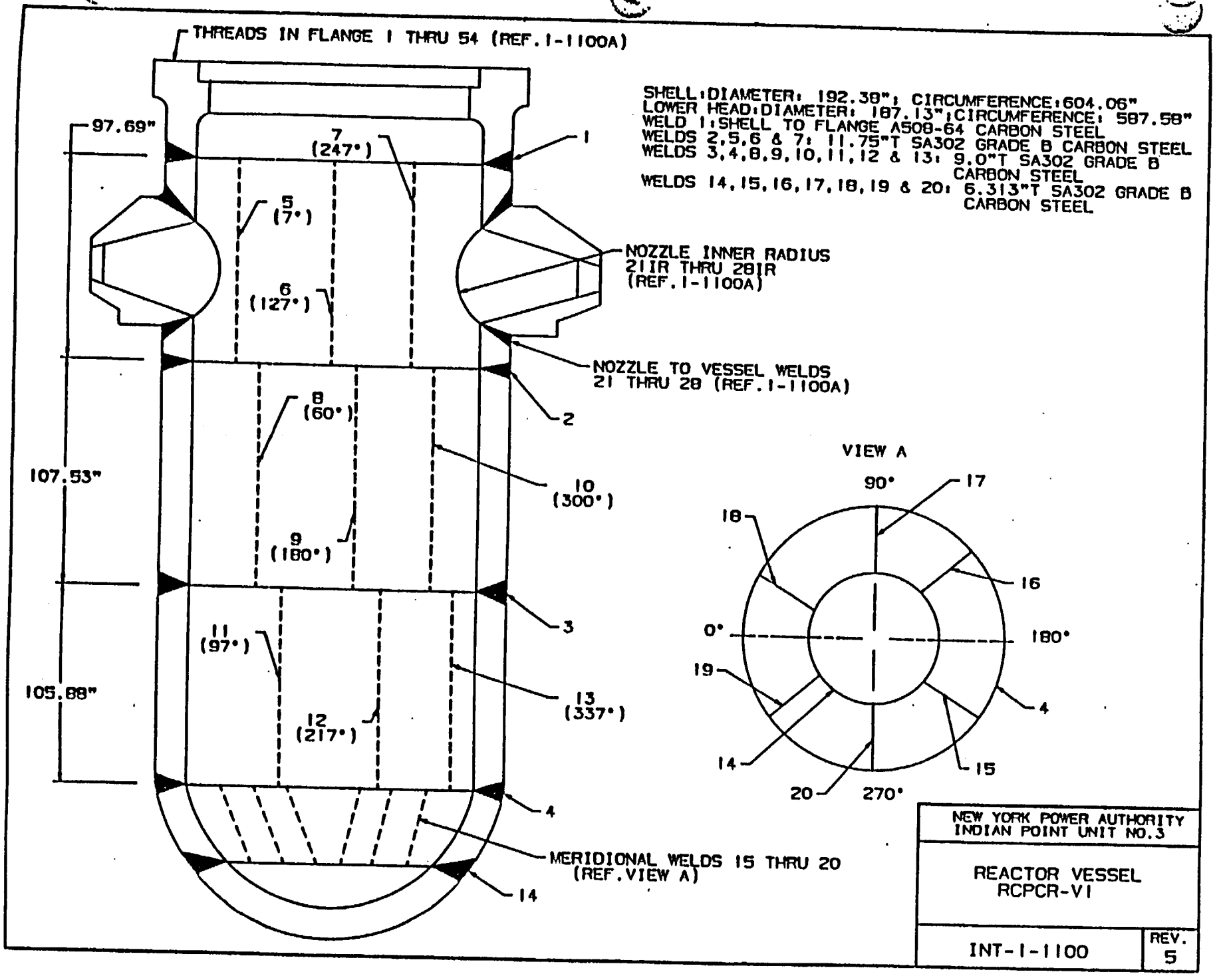
THREADS IN FLANGE 1 THRU 54 (REF. I-1100A)
SHELL: DIAMETER: 192.38"; CIRCUMFERENCE: 604.06"
LOWER HEAD: DIAMETER: 187.13"; CIRCUMFERENCE: 587.58"
WELD 1: SHELL TO FLANGE A508-64 CARBON STEEL
WELDS 2,5,6 & 7: 11.75"T SA302 GRADE B CARBON STEEL
WELDS 3,4,8,9,10,11,12 & 13: 9.0"T SA302 GRADE B CARBON STEEL
WELDS 14,15,16,17,18,19 & 20: 6.313"T SA302 GRADE B CARBON STEEL
97.69"
7 (247°)
1
5 (7°)
NOZZLE INNER RADIUS 21IR THRU 28IR (REF. I-1100A)
6 (127°)
NOZZLE TO VESSEL WELDS 21 THRU 28 (REF. I-1100A)
8 (60°)
2
107.53"
10 (300°)
9 (180°)
3
11 (97°)
105.88"
13 (337°)
12 (217°)
4
MERIDIONAL WELDS 15 THRU 20 (REF. VIEW A)
14
VIEW A
90°
17
18
16
0°
180°
19
4
14
15
20
270°
NEW YORK POWER AUTHORITY
INDIAN POINT UNIT NO. 3
REACTOR VESSEL
RCPCR-VI
INT-I-1100
REV. 5

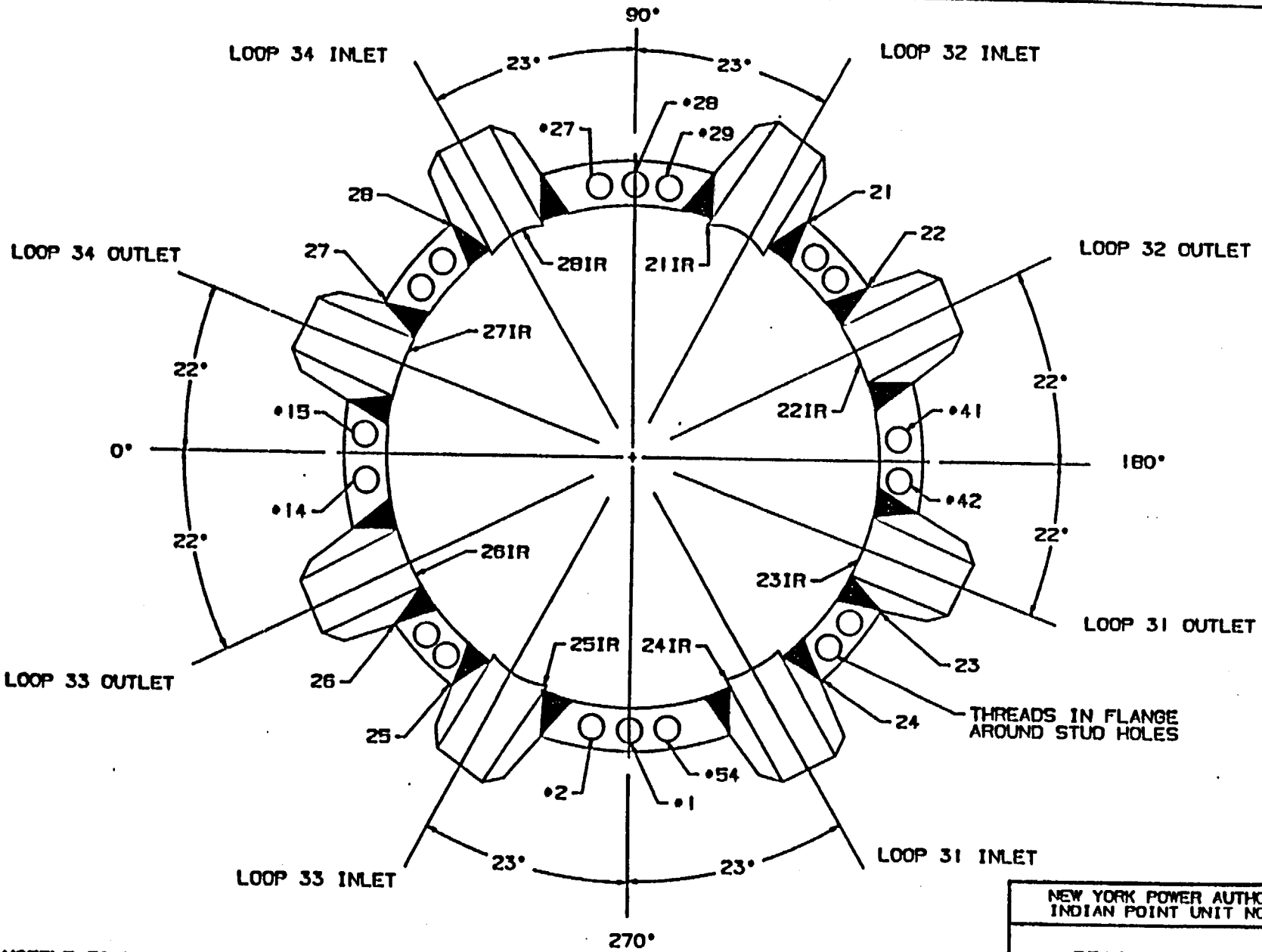

NOZZLE TO VESSEL WELDS: 21 THRU 28
NOZZLE INSIDE RADIUS SECTION: 21IR THRU 28IR
THREADS IN FLANGE: •1 THRU •54

NEW YORK POWER AUTHORITY INDIAN POINT UNIT NO.3	
REACTOR VESSEL RCPCR-VI	
INT-I-1100A	REV. 5

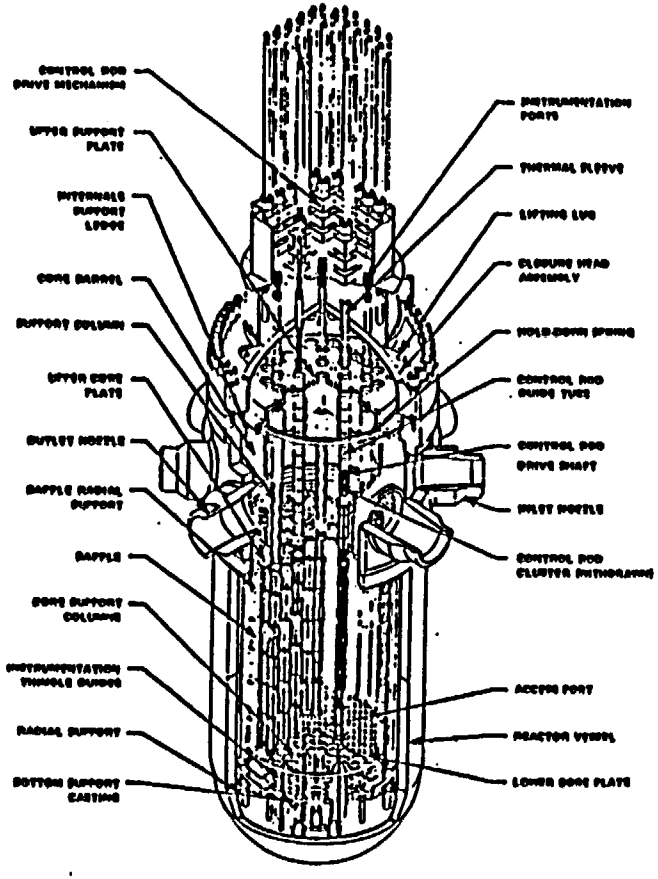

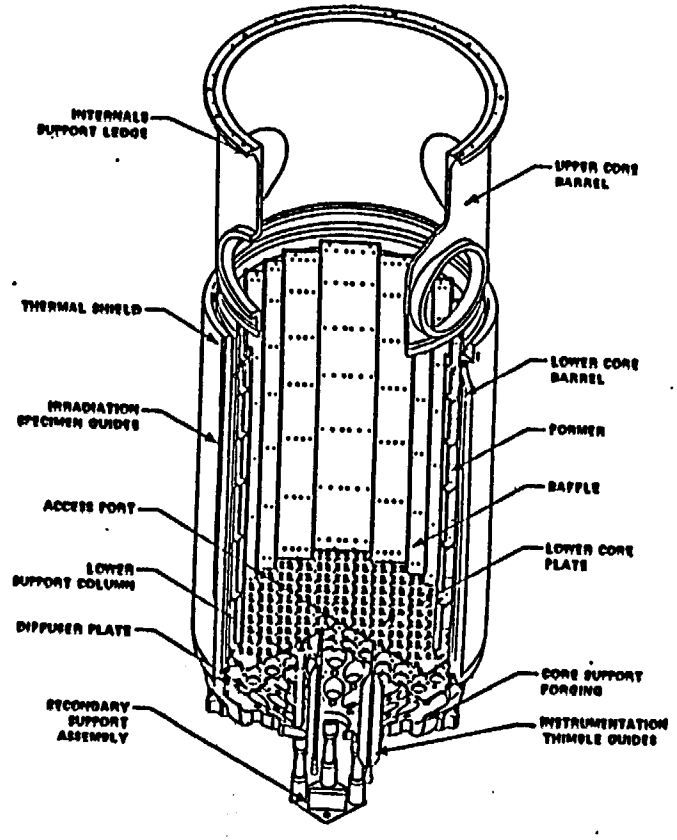

NEW YORK POWER AUTHORITY INDIAN POINT UNIT NO.3	
REACTOR VESSEL INTERNALS	
INT-1-1200	REV. 3

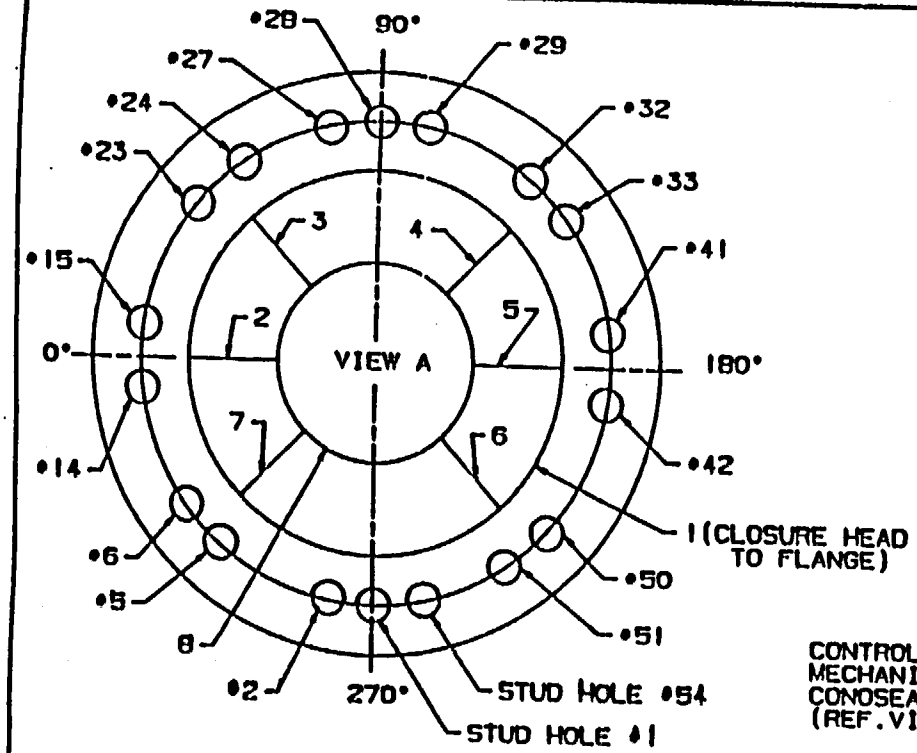

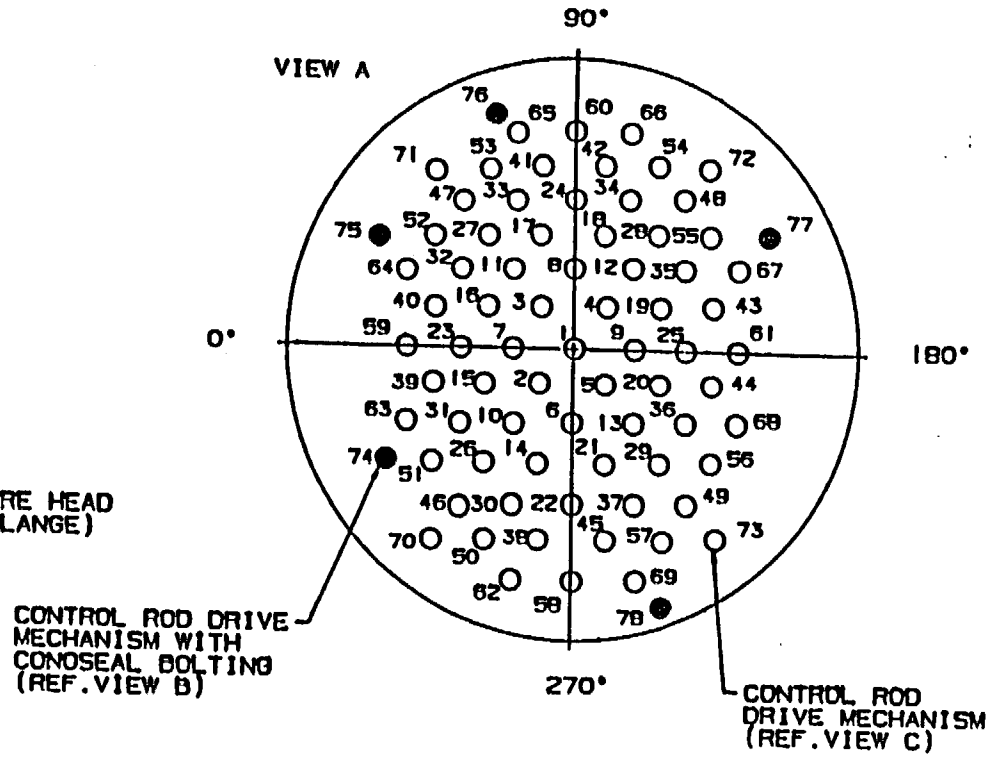

REACTOR VESSEL CLOSURE HEAD: DIAMETER 167.438"
CIRCUMFERENCE: 525.75"
CLOSURE HEAD TO FLANGE WELD 1: 8.0"T A508-64 CARBON STEEL
MERIODIONAL WELDS 2 THRU 7: 8.0"T SA302 GRADE B CARBON STEEL
CONTOL ROD DRIVE MECHANISMS 1 THRU 78: 0.625"T SB-167 INCONNEL TO 304 STAINLESS STEEL

CONOSEAL BOLTING
VIEW B

MALE FLANGE

UPPER POSITIONER

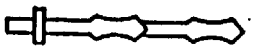

UPPER AND LOWER CLAMP (1 EACH)

CONTROL ROD DRIVE MECHANISMS
VIEW C

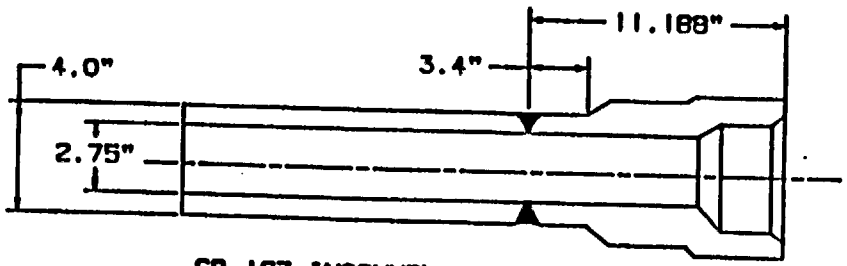

NEW YORK POWER AUTHORITY INDIAN POINT UNIT NO.3	
REACTOR VESSEL CLOSURE HEAD	
INT-1-1300	REV. 4

REACTOR VESSEL
STUD

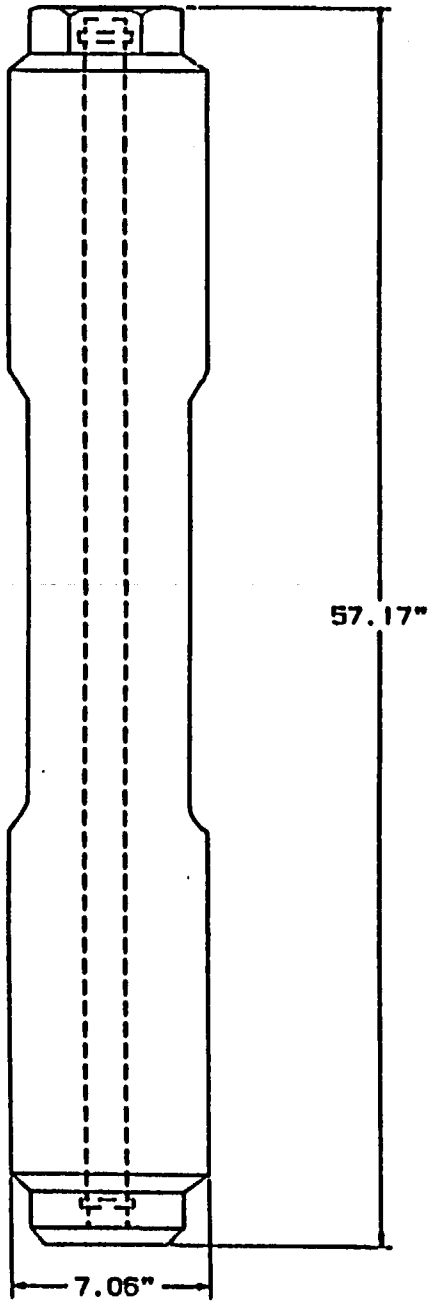

REACTOR VESSEL
NUT

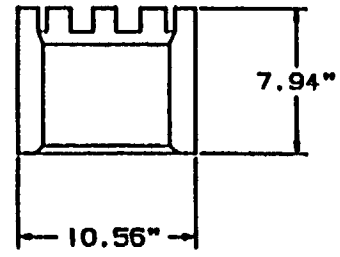

REACTOR VESSEL
CONVEX WASHER

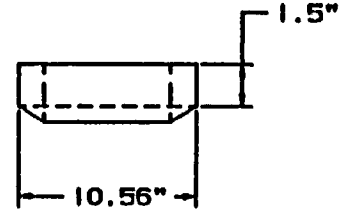

54 STUDS: SA540 GRADE B24 CARBON STEEL
54 NUTS: SA540 GRADE B24 CARBON STEEL
54 WASHERS: SA540 GRADE B24 CARBON STEEL

NEW YORK POWER AUTHORITY INDIAN POINT UNIT NO.3	
REACTOR VESSEL STUDS, NUTS & WASHERS	
INT-1-1400	REV. 3

PRESSURIZER

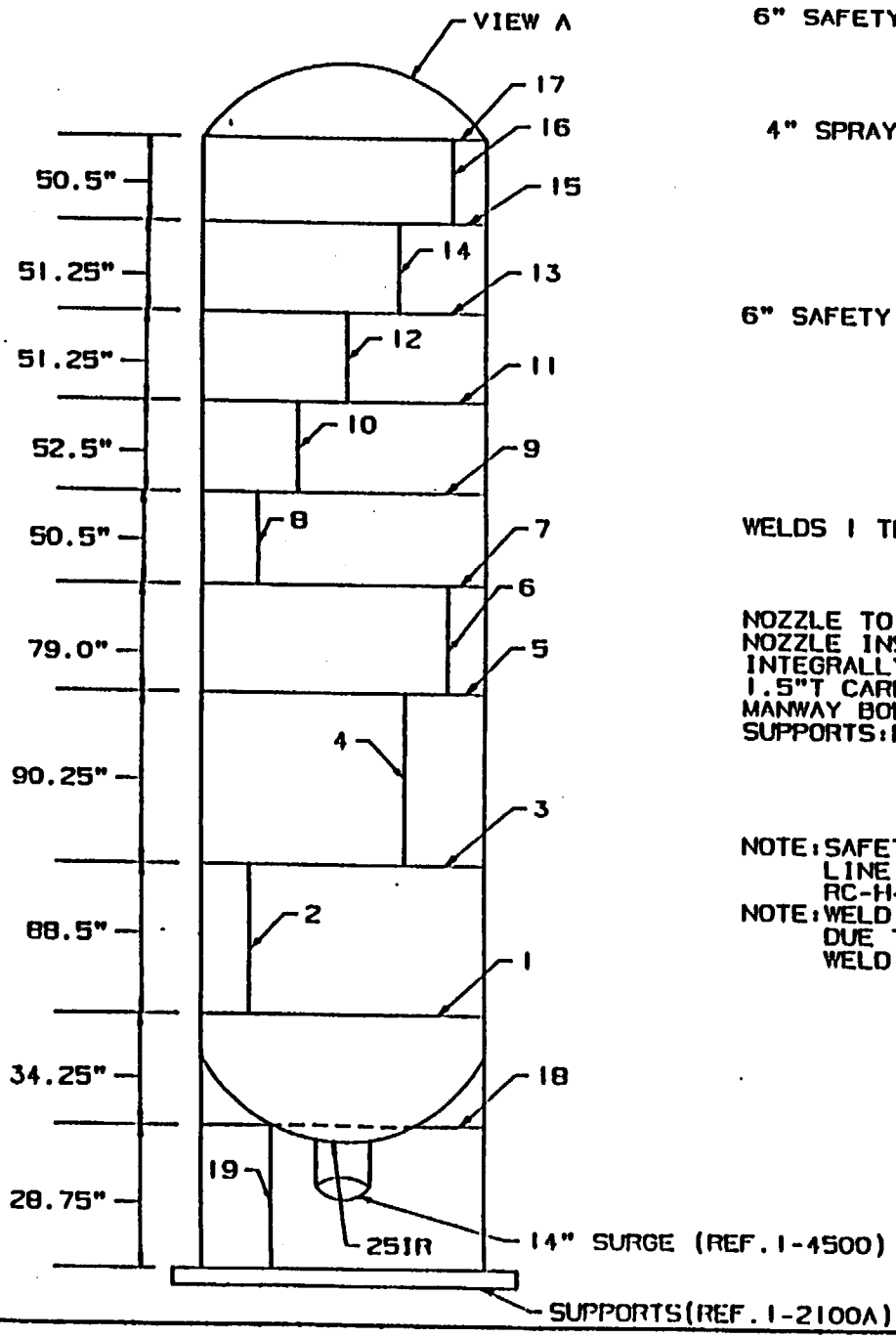

VIEW A

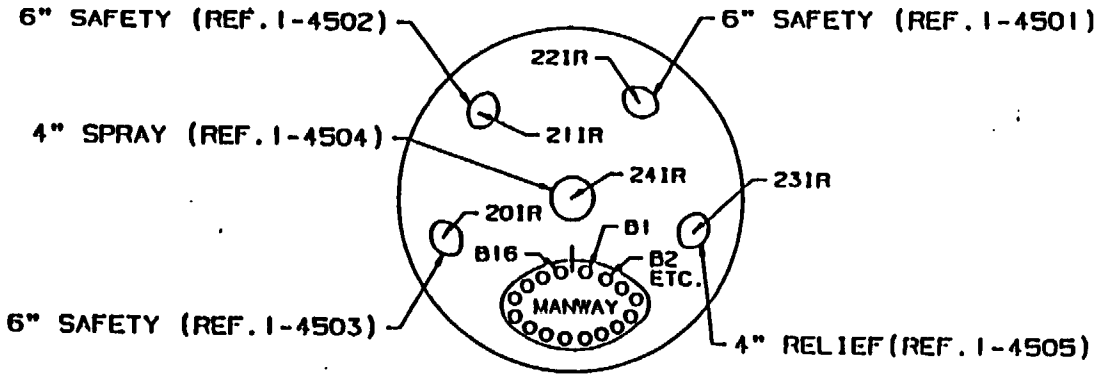

WELDS 1 THRU 17: SHELL: 4.75"T SA 302 GRADE B CARBON STEEL
UPPER & LOWER HEAD: 4.75"T SA216 GRADE WCC CARBON STEEL
DIAMETER: 92.375"; CIRCUMFERENCE: 290.05"
NOZZLE TO VESSEL WELDS: NOT APPLICABLE
NOZZLE INSIDE RADIUS SECTION: 20IR THRU 25IR
INTEGRALLY WELDED ATTACHMENT SUPPORT SKIRT WELDS 18 & 19:
1.5"T CARBON STEEL PLATE TO SA516 GRADE 70 CARBON STEEL
MANWAY BOLTING: 16-1.88" DIAMETER
SUPPORTS: REF. INT-I-2100A

NOTE: SAFETY NOZZLE LOCATIONS PER CON.ED. DRAWING A202108 AND LINE NUMBER STAMPED ON INTEGRALLY WELDED ATTACHMENTS RC-H-342, RC-H-343 AND RC-H-344.
NOTE: WELD 2-0" TO 15" (ADJACENT WELD 1) INACCESSIBLE DUE TO PERMANENT INSULATION.
WELD 19 LOCATED 25" CCW FROM WELD 2.

NEW YORK POWER AUTHORITY INDIAN POINT UNIT NO.3	
PRESSURIZER RCPCPR1	
INT-I-2100	REV. 7

SIDE VIEW

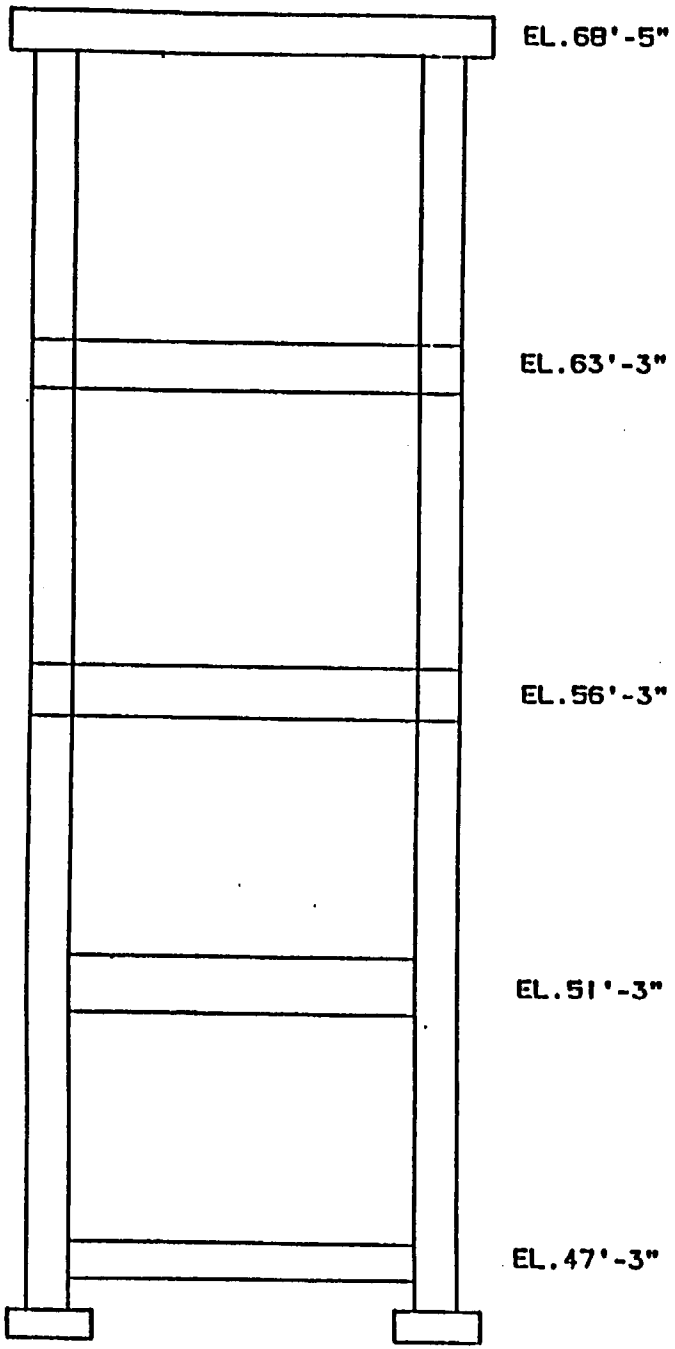

TOP VIEW

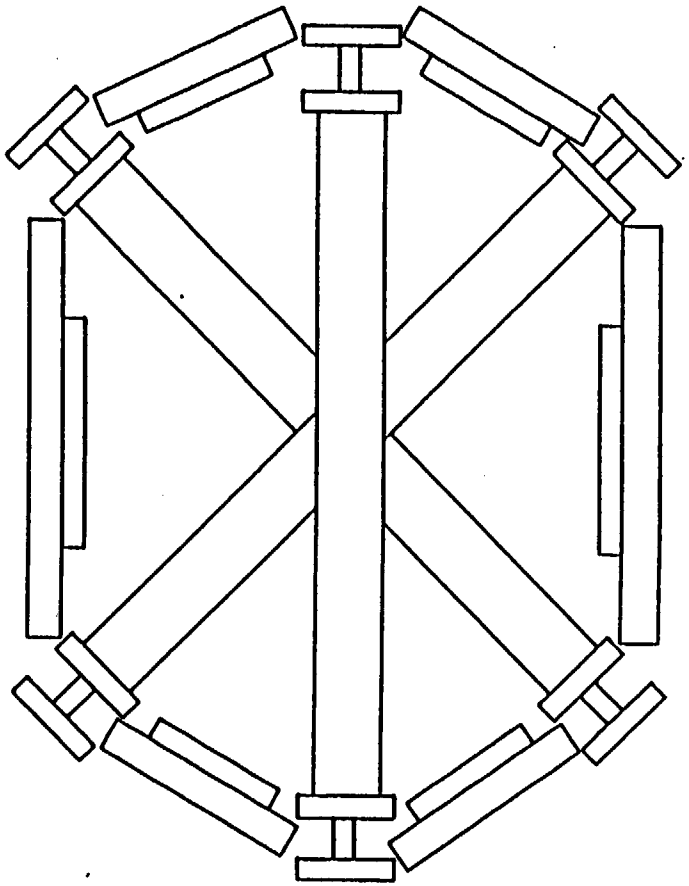

NEW YORK POWER AUTHORITY INDIAN POINT UNIT NO.3	
PRESSURIZER RCPCPR1 SUPPORTS	
INT-1-2100A	REV. 0

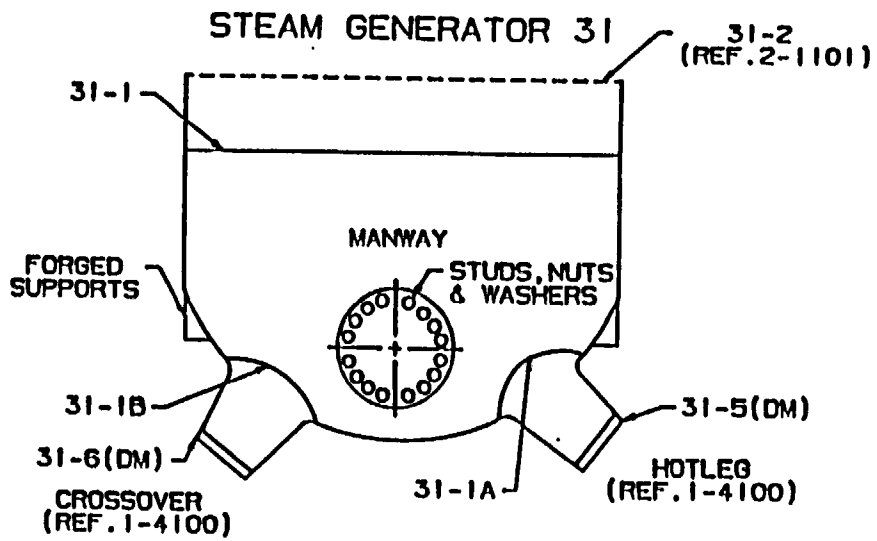

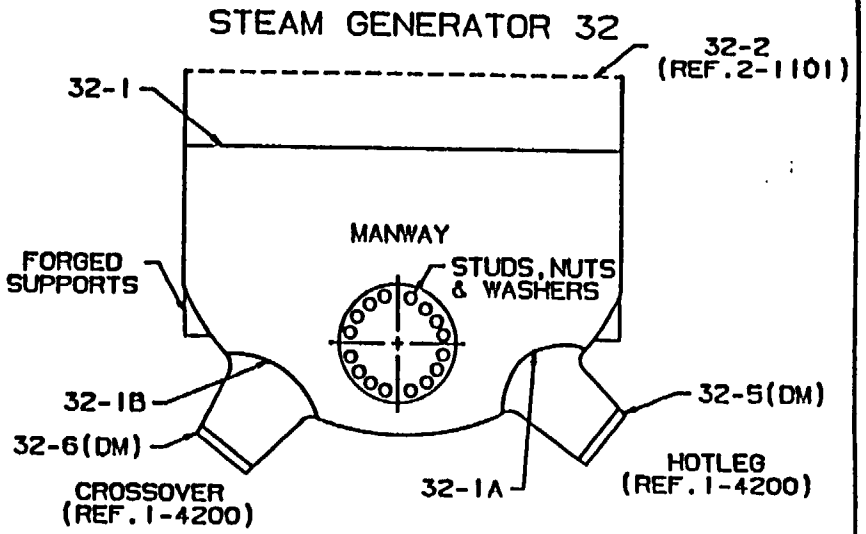

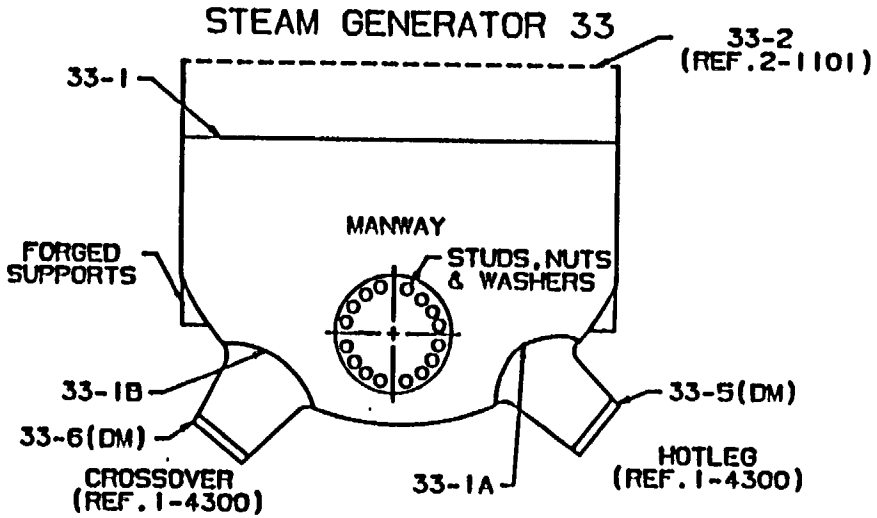

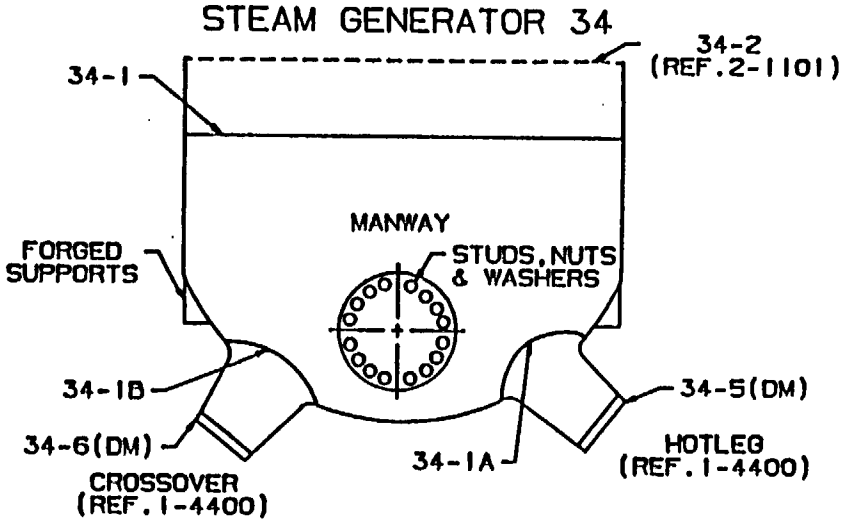

CHANNEL HEAD TO TUBESHEET WELDS 31-1,32-1,33-1 & 34-1:
5.65"T SA508 CLASS 3 CARBON STEEL:
DIAMETER: 129.25"; CIRCUMFERENCE: 405.84"
0 REFERENCE:TOP CENTERLINE OF HOTLEG MANWAY
NOZZLE TO VESSEL WELDS: NOT APPLICABLE
NOZZLE INSIDE RADIUS SECTIONS 31-1A,31-1B,32-1A,32-1B,
33-1A,33-1B,34-1A & 34-1B: SA 508 CLASS 3 CARBON STEEL
NOZZLE TO SAFE-ENDS 31-5(DM),31-6(DM),32-5(DM),32-6(DM),33-5(DM),
33-6(DM),34-5(DM) & 34-6(DM): 31" I.D.
SA508 CLASS 3 CARBON STEEL WITH TYPE 308L STAINLESS STEEL
MANWAY STUDS,NUTS & WASHERS:HOTLEG AND COLDLEG:16 STUDS(DIA.1.88"),
16 NUTS AND 32 WASHERS EACH MANWAY
INTEGRALLY WELDED ATTACHMENTS: NOT APPLICABLE

NEW YORK POWER AUTHORITY INDIAN POINT UNIT NO.3	
REPLACEMENT STEAM GENERATORS RCPCSG1-31,RCPCSG2-32, RCPCSG3-33 & RCPCSG4-34	
INT-1-3101	REV. 1

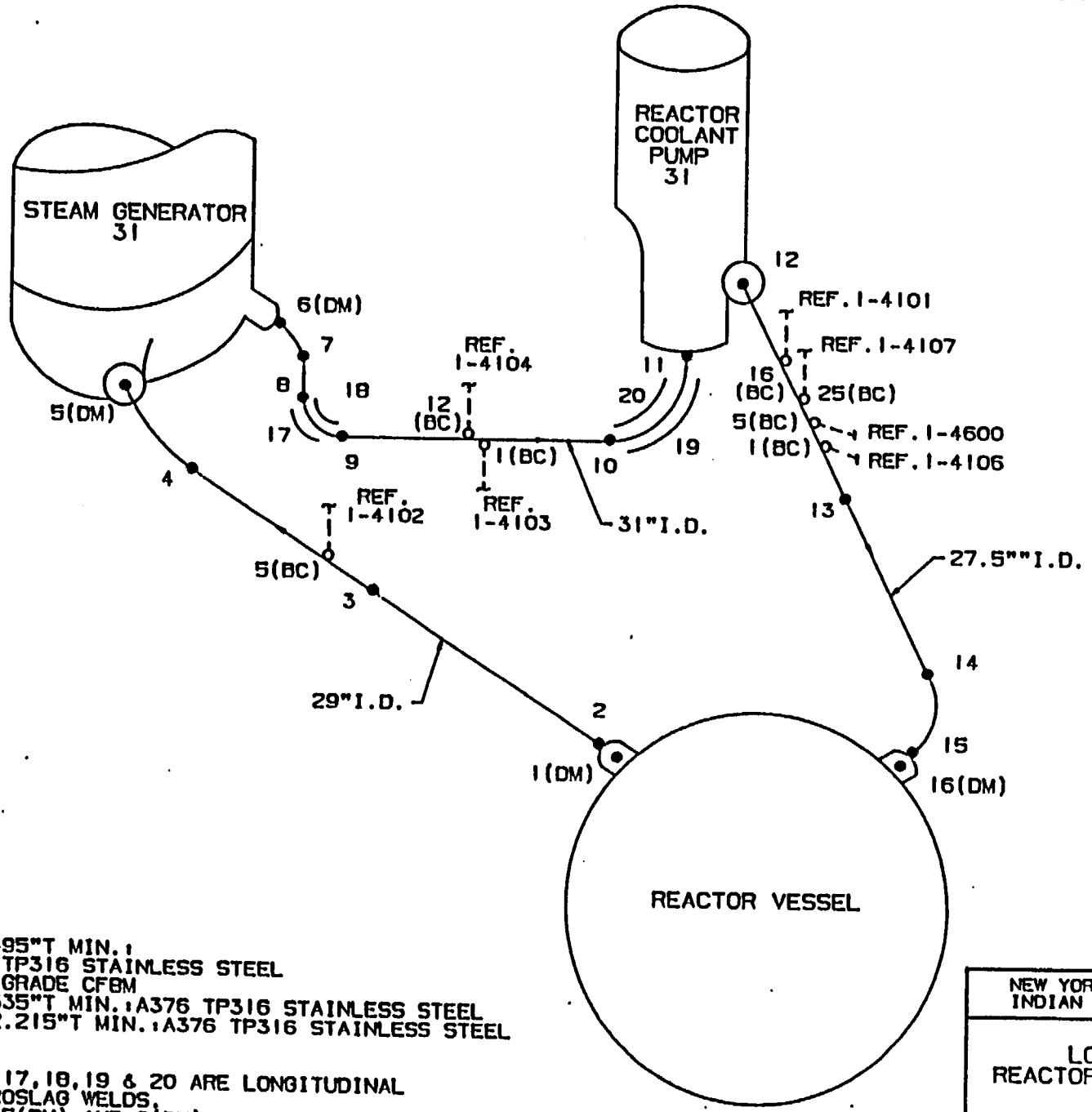

PIPING:
31" I.D. 2.495"T MIN.:
PIPING-A376 TP316 STAINLESS STEEL
ELBOWS-A351 GRADE CF8M
29" I.D. 2.335"T MIN.:A376 TP316 STAINLESS STEEL
27.5" I.D. 2.215"T MIN.:A376 TP316 STAINLESS STEEL

NOTE: WELDS 17,18,19 & 20 ARE LONGITUDINAL ELECTROSLAG WELDS.
WELDS 5(DM) AND 6(DM) REPLACED 1989.

NEW YORK POWER AUTHORITY INDIAN POINT UNIT NO.3	
LOOP 31 REACTOR COOLANT PIPE	
INT-1-4100	REV. 4

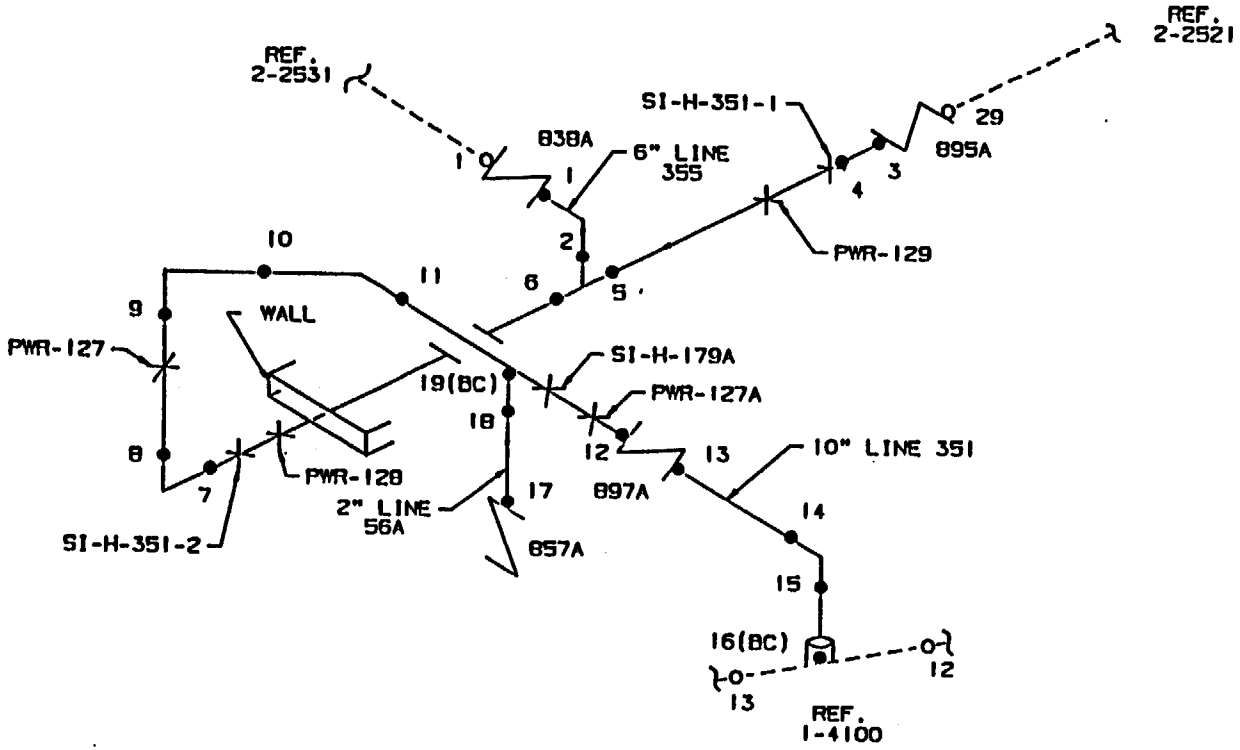

PIPING:
10" SCH 140 1.00"T STAINLESS STEEL
6" SCH 120 .562"T STAINLESS STEEL
2" SCH 160 .344"T STAINLESS STEEL

VALVE BONNET BOLTING:
897A: 16 STUDS & 16 NUTS
895A: 16 STUDS & 16 NUTS
838A: 12 STUDS & 12 NUTS
857A: NOT APPLICABLE

VALVE MANUFACTURER:
897A: DARLING
895A: DARLING
838A: VELAN

NEW YORK POWER AUTHORITY INDIAN POINT UNIT NO.3	
10" LINE 351 ACCUMULATOR DISCHARGE, 6" LINE 355 RHR & 2" LINE 56A SIS	
INT-I-4101	REV. 4

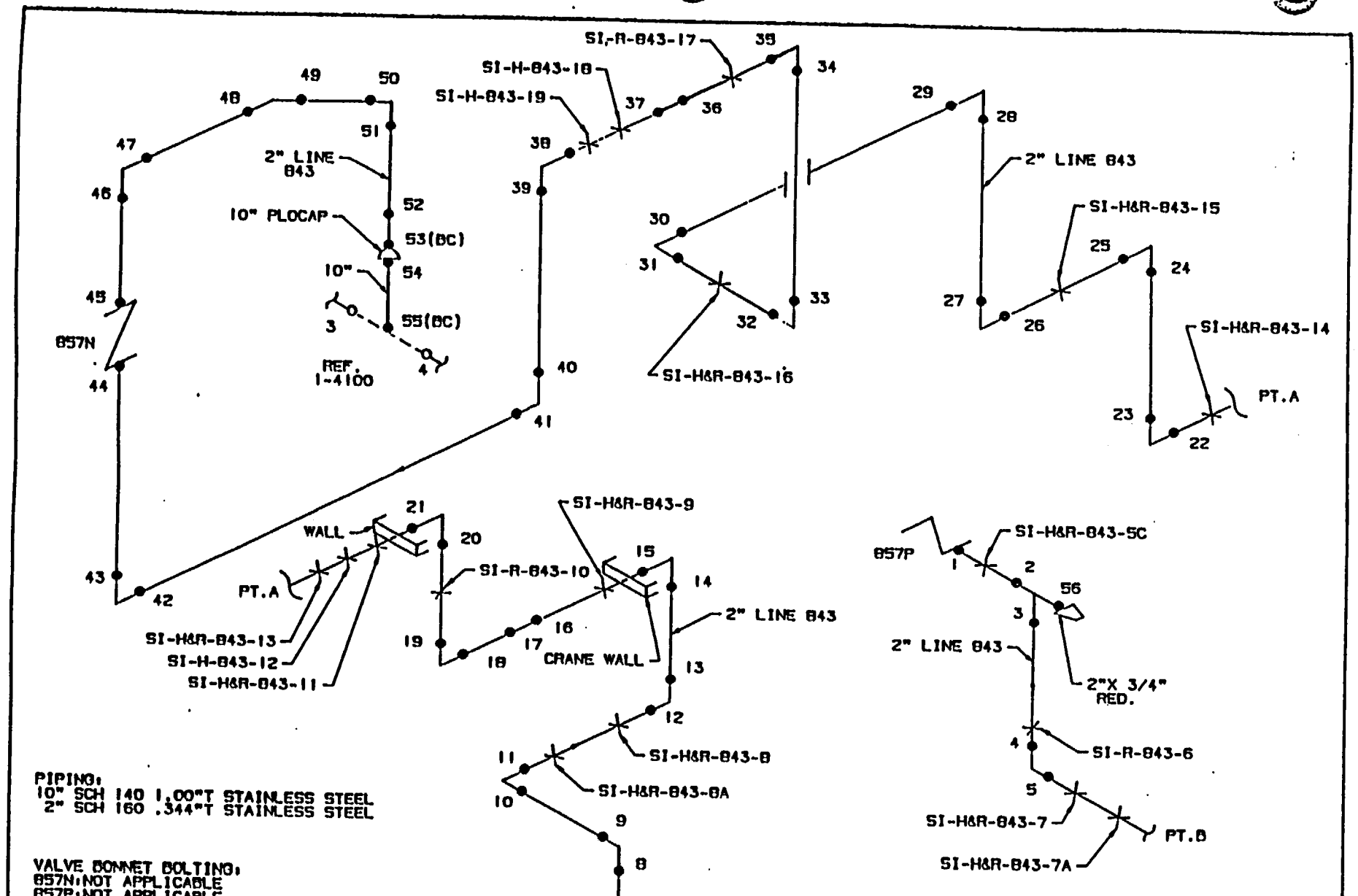

PIPING:
10" SCH 140 1.00"T STAINLESS STEEL
2" SCH 160 .344"T STAINLESS STEEL

VALVE BONNET BOLTING:
857N:NOT APPLICABLE
857P:NOT APPLICABLE

VALVE MANUFACTURER:
857N:NOT APPLICABLE
857P:NOT APPLICABLE

NEW YORK POWER AUTHORITY
INDIAN POINT UNIT NO.3

LOOP 31 10" PLOCAP
LOOP 31 2" LINE 843 SIS HOTLEG

INT-1-4102

REV. 6

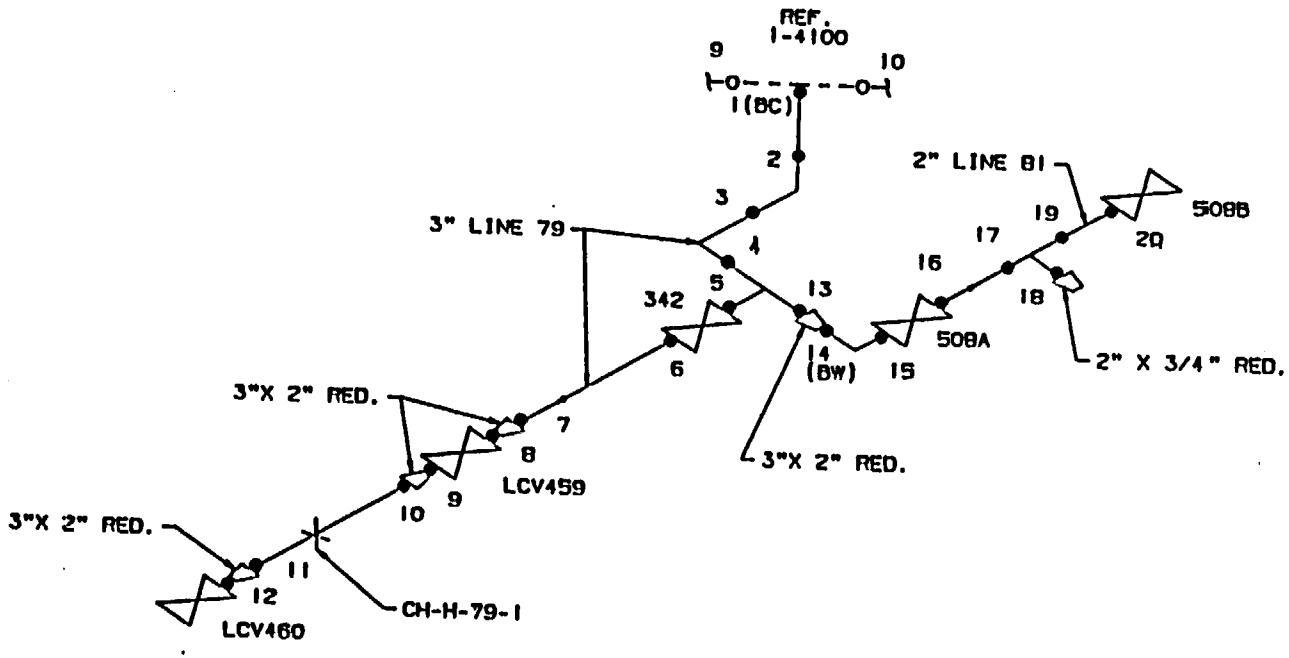

PIPING:
3.0" SCH 160 .438"T STAINLESS STEEL
2.0" SCH 160 .344"T STAINLESS STEEL

VALVE BONNET BOLTING:
342: 2 STUDS & 2 NUTS
LCV459:6 STUDS & 6 NUTS
LCV460:6 STUDS & 6 NUTS
508A:NOT APPLICABLE
508B:NOT APPLICABLE

VALVE MANUFACTURER:
342:NOT APPLICABLE
LCV459:NOT APPLICABLE
LCV460:NOT APPLICABLE
508A:NOT APPLICABLE
508B:NOT APPLICABLE

NEW YORK POWER AUTHORITY INDIAN POINT UNIT NO.3	
LOOP 31 3"& 2" LINE 79 LETDOWN & 2" LINE 81 DRAIN	
INT-1-4103	REV. 3

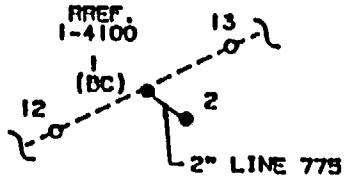

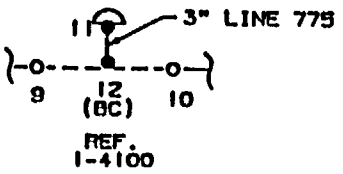

PIPING:
3.0" SCH 160 .438"T STAINLESS STEEL
2.0" SCH 160 .344"T STAINLESS STEEL

NOTE: INT-1-4104 3" LINE 775 DELETED AND CAPPED 1989.WELD 11 INSTALLED 1989.
INT-1-4105 2" LINE 776 DELETED 1989.
INT-1-4106 2" LINE 775 DELETED AND BOSSED 1989.WELD 2 INSTALLED 1989.

NEW YORK POWER AUTHORITY INDIAN POINT UNIT NO.3	
INT-1-4104 LOOP 31 3" LINE 775 RTD INT-1-4106 LOOP 31 2" LINE 775 RTD	
INT-1-4104 & INT-1-4106	REV. 6

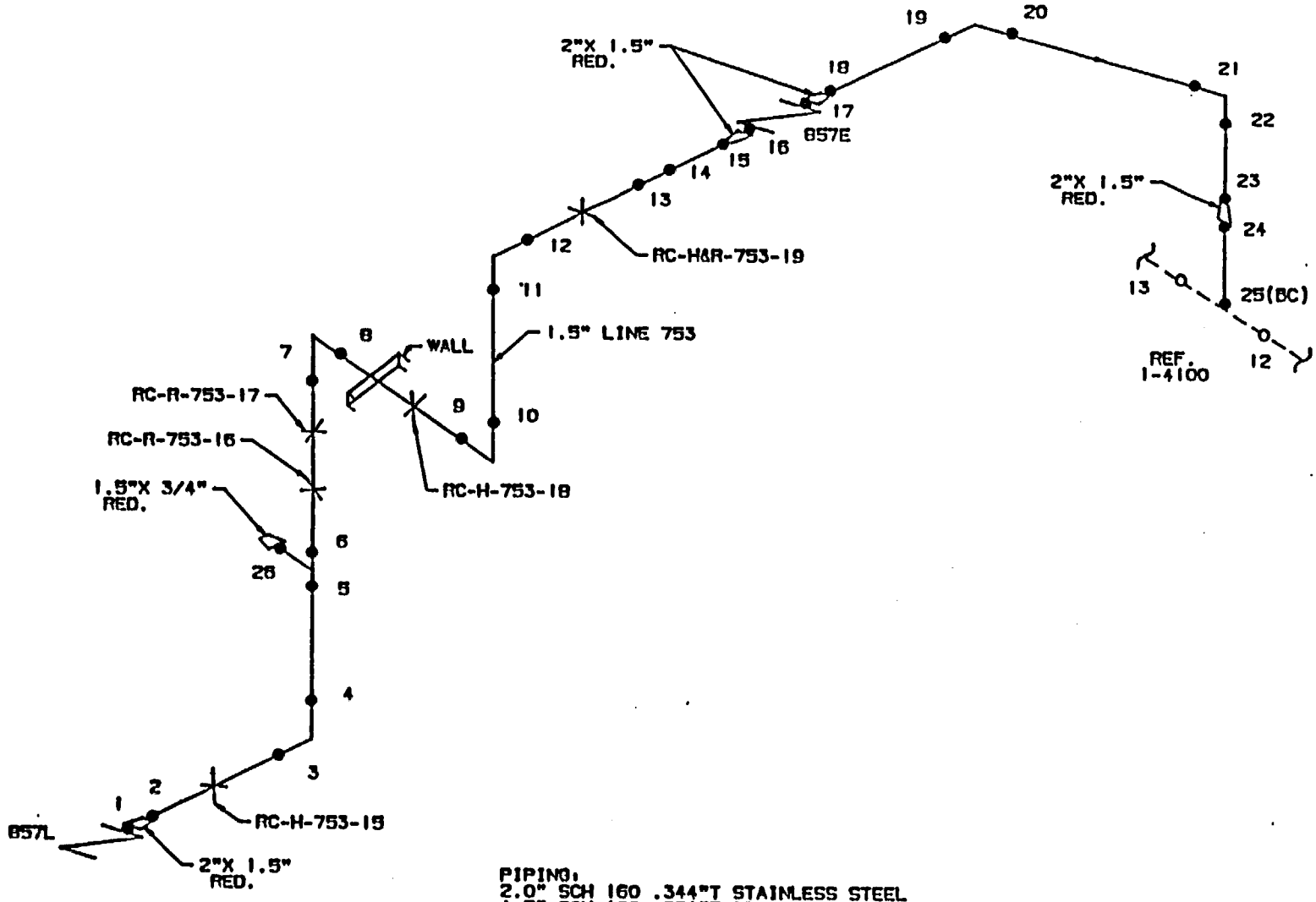

PIPING:
2.0" SCH 160 .344"T STAINLESS STEEL
1.5" SCH 160 .281"T STAINLESS STEEL

VALVE BONNET BOLTING:
857E: NOT APPLICABLE
857L: NOT APPLICABLE

VALVE MANUFACTURER:
857E: NOT APPLICABLE
857L: NOT APPLICABLE

NEW YORK POWER AUTHORITY INDIAN POINT UNIT NO.3	
LOOP 31 2" & 1.5" LINE 753 SIS COLDLEG	
INT-I-4107	REV. 4

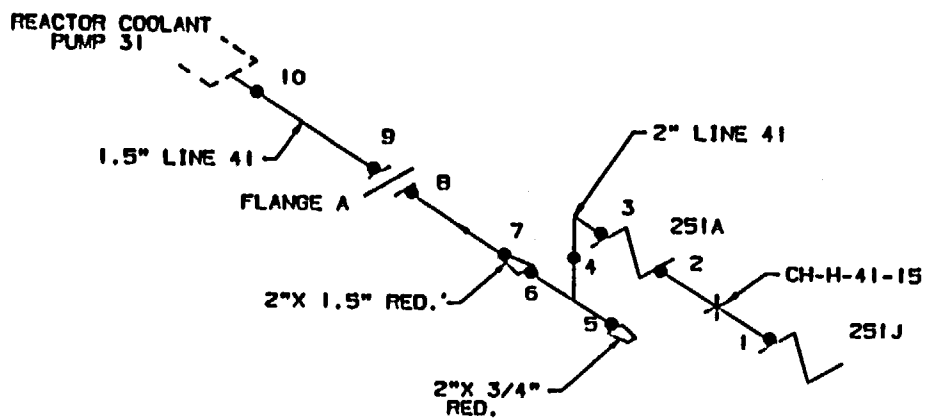

PIPING:
2.0" SCH 160 .344"T STAINLESS STEEL
1.5" SCH 160 .281"T STAINLESS STEEL

VALVE BONNET BOLTING:
251A:NOT APPLIACBLE
251J:NOT APPLIACBLE

VALVE MANUFACTURER:
251A:NOT APPLICABLE
251J:NOT APPLICABLE

FLANGE BOLTING:
FLANGE A:4 STUDS & 8 NUTS

NEW YORK POWER AUTHORITY INDIAN POINT UNIT NO.3	
LOOP 31 2" & 1.5" LINE 41 SEAL INJECTION	
INT-1-4108	REV. 4

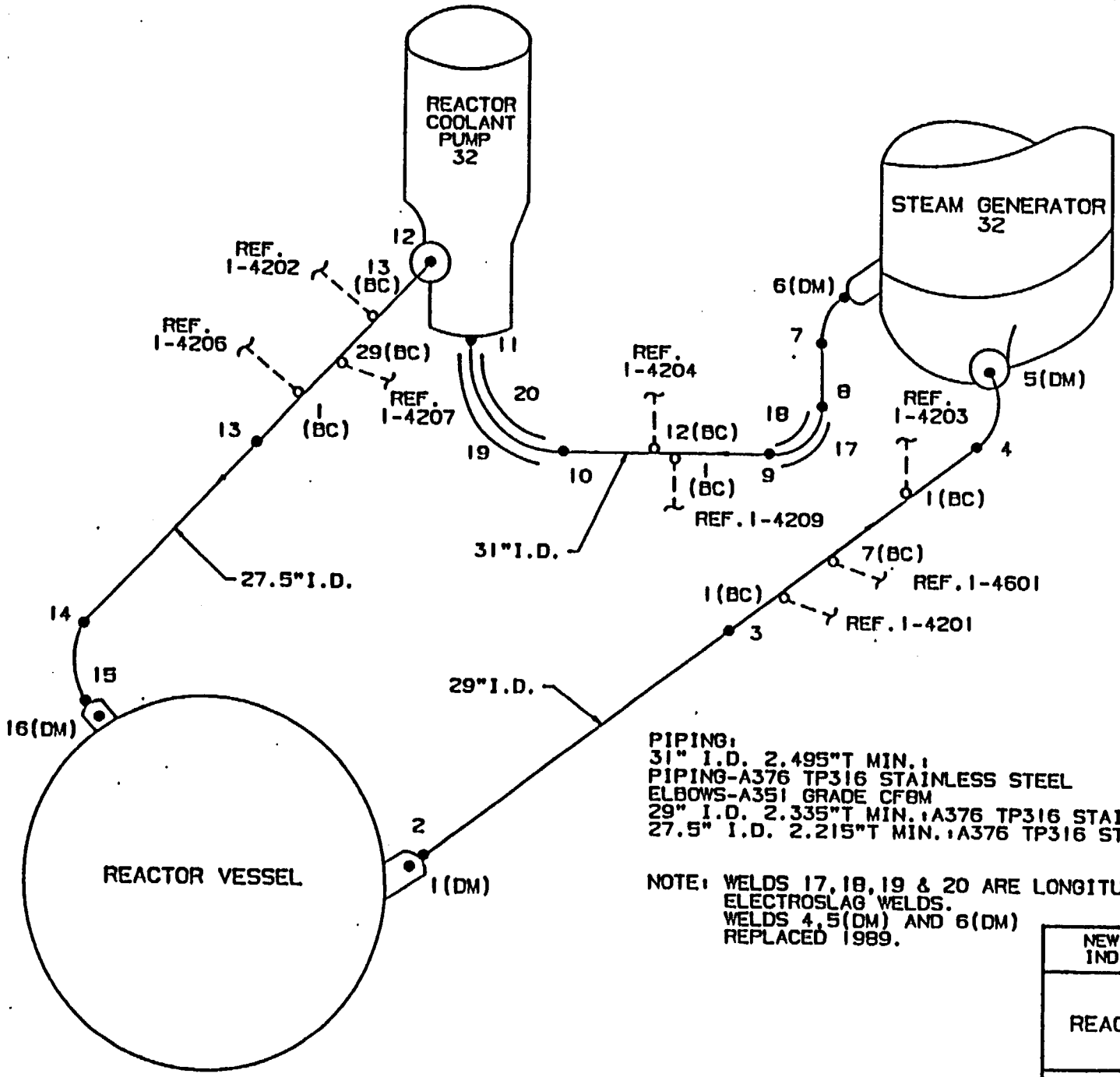

PIPING:
31" I.D. 2.495"T MIN.:
PIPING-A376 TP316 STAINLESS STEEL
ELBOWS-A351 GRADE CF8M
29" I.D. 2.335"T MIN.:A376 TP316 STAINLESS STEEL
27.5" I.D. 2.215"T MIN.:A376 TP316 STAINLESS STEEL

NOTE: WELDS 17,18,19 & 20 ARE LONGITUDINAL ELECTROSLAG WELDS.
WELDS 4,5(DM) AND 6(DM) REPLACED 1989.

NEW YORK POWER AUTHORITY INDIAN POINT UNIT NO.3	
LOOP 32 REACTOR COOLANT PIPE	
INT-1-4200	REV. 4

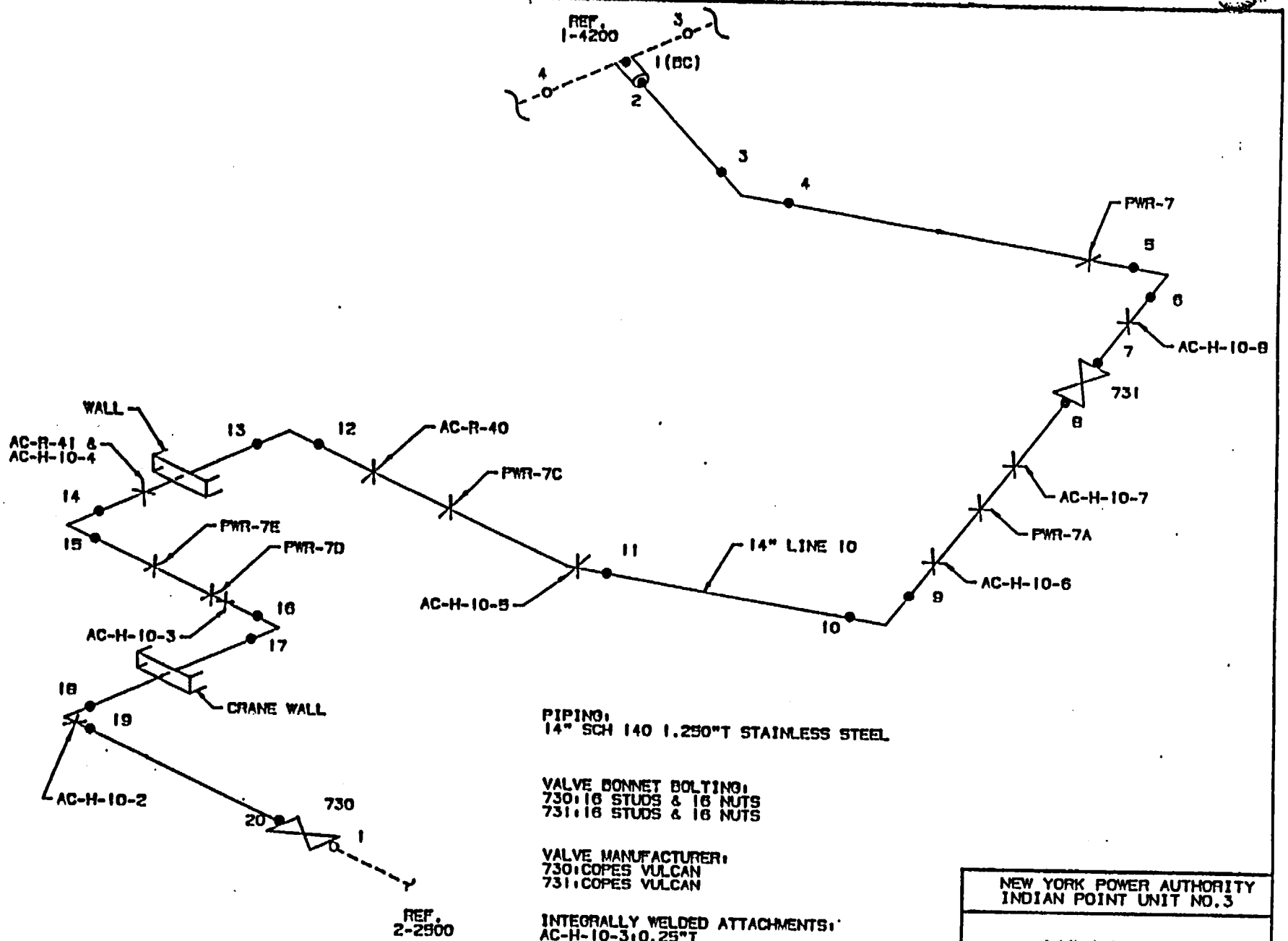

PIPING:
14" SCH 140 1.250"T STAINLESS STEEL

VALVE BONNET BOLTING:
730:16 STUDS & 16 NUTS
731:16 STUDS & 16 NUTS

VALVE MANUFACTURER:
730:COPES VULCAN
731:COPES VULCAN

INTEGRALLY WELDED ATTACHMENTS:
AC-H-10-3:0.25"T

NEW YORK POWER AUTHORITY INDIAN POINT UNIT NO.3	
14" LINE 10 RHR HOTLEG TAKE-OFF	
INT-1-4201	REV. 4

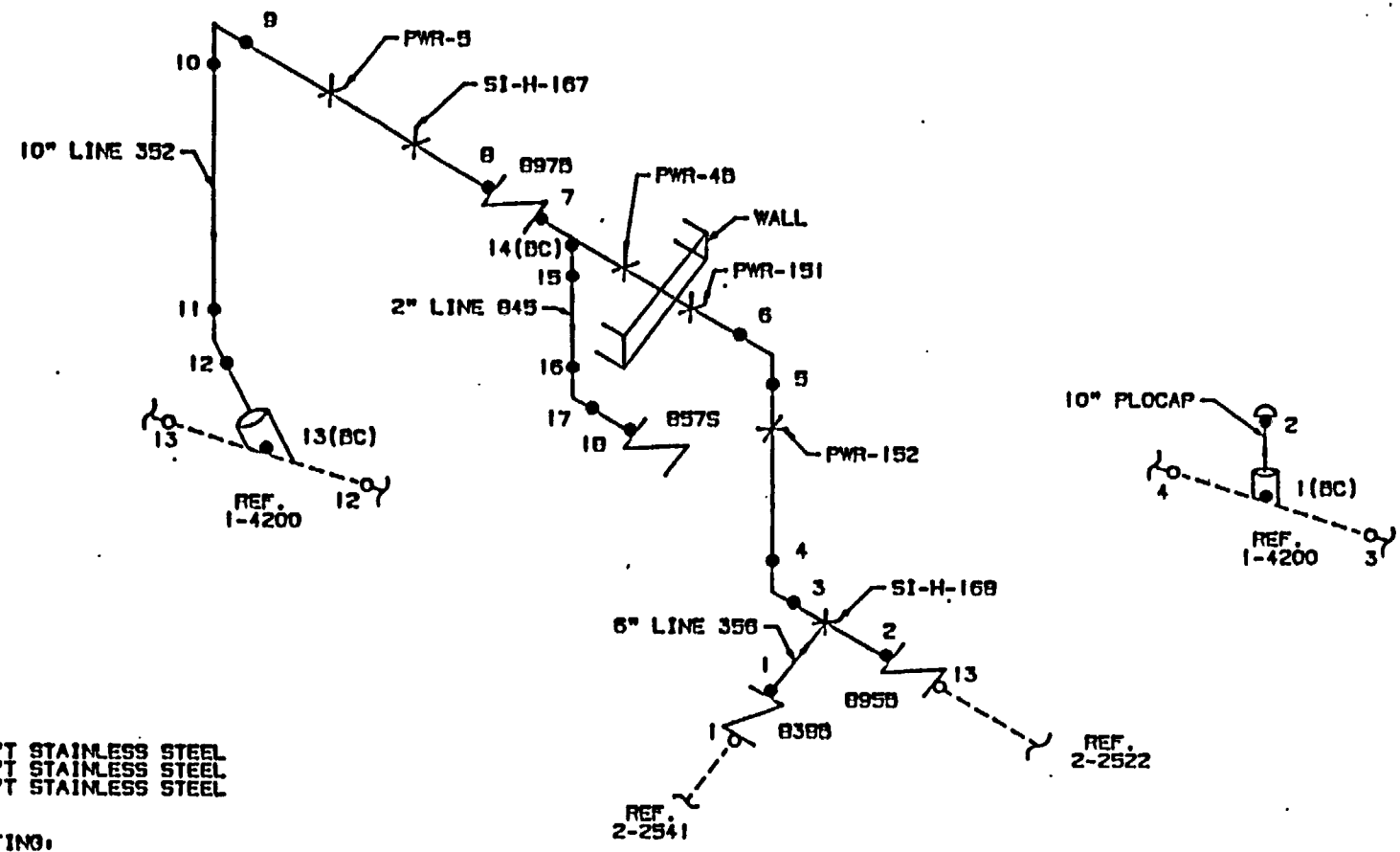

PIPING:
10" SCH 140 1.00"T STAINLESS STEEL
6" SCH 120 .562"T STAINLESS STEEL
2" SCH 160 .344"T STAINLESS STEEL

VALVE BONNET BOLTING:
897B:16 STUDS & 16 NUTS
895B:16 STUDS & 16 NUTS
838B:12 STUDS & 12 NUTS
857S:NOT APPLICABLE

VALVE MANUFACTURER:
897B:DARLING
895B:DARLING
838B:VELAN

INTEGRALLY WELDED ATTACHMENTS:
PWR-4B:0.75"T
SI-H-168:0.216"T

NEW YORK POWER AUTHORITY INDIAN POINT UNIT NO.3	
INT-1-4202 10" LINE 352 ACCUMULATOR DISCHARGE,6" LINE 352 RHR & 2" LINE 845 SIS INT-1-4203 10" PLOCAP	
INT-1-4202 & INT-1-4203	REV. 4

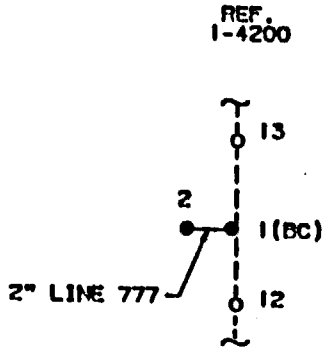

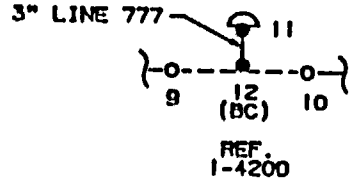

PIPING:
3.0" SCH 160 .438"T STAINLESS STEEL
2.0" SCH 160 .344"T STAINLESS STEEL

NOTE: INT-1-4204 3" LINE 777 DELETED AND CAPPED 1989.WELD 11 INSTALLED 1989.
INT-1-4205 2" LINE 778 DELETED 1989.
INT-1-4206 2" LINE 777 DELETED AND BOSSED 1989.WELD 2 INSTALLED 1989.

NEW YORK POWER AUTHORITY INDIAN POINT UNIT NO.3	
INT-1-4204 LOOP 32 3" LINE 777 RTD INT-1-4206 LOOP 32 2" LINE 777 RTD	
INT-1-4204 & INT-1-4206	REV. 5

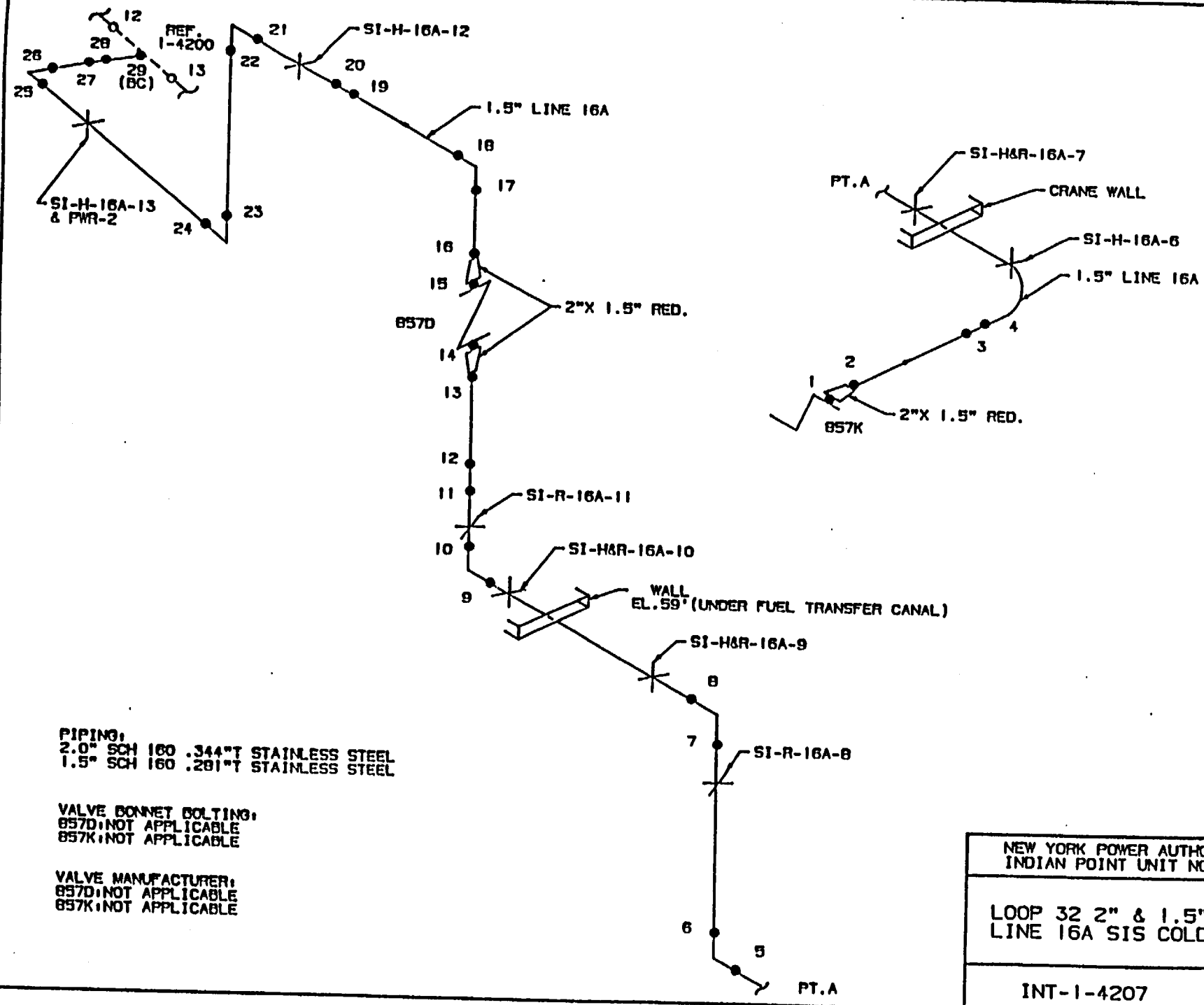

PIPING:
2.0" SCH 160 .344"T STAINLESS STEEL
1.5" SCH 160 .281"T STAINLESS STEEL

VALVE BONNET BOLTING:
857D:NOT APPLICABLE
857K:NOT APPLICABLE

VALVE MANUFACTURER:
857D:NOT APPLICABLE
857K:NOT APPLICABLE

NEW YORK POWER AUTHORITY
INDIAN POINT UNIT NO.3

LOOP 32 2" & 1.5"
LINE 16A SIS COLDLEG

INT-I-4207

REV. 4

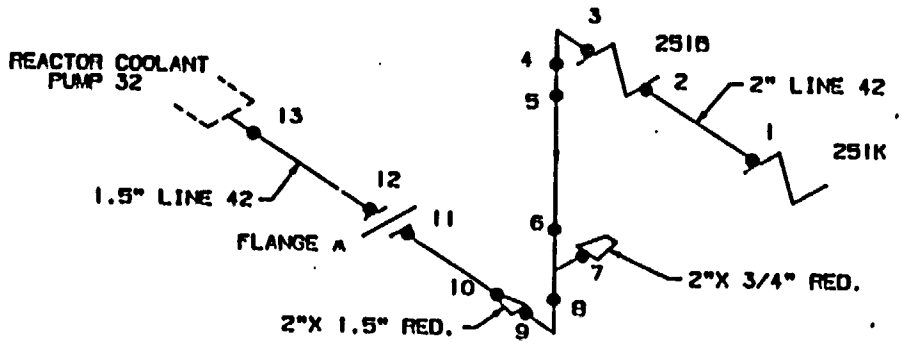

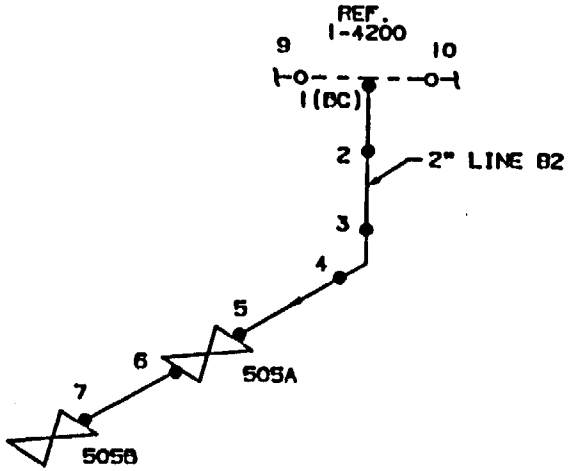

PIPING:
2.0" SCH 160 .344"T STAINLESS STEEL
1.5" SCH 160 .281"T STAINLESS STEEL

VALVE BONNET BOLTING:
251B:NOT APPLIACBLE
251K:NOT APPLIACBLE
505A:NOT APPLICABLE
505B:NOT APPLICABLE

VALVE MANUFACTURER:
251B:NOT APPLICABLE
251K:NOT APPLICABLE
505A:NOT APPLICABLE
505B:NOT APPLICABLE

FLANGE BOLTING:
FLANGE A:4 STUDS & 8 NUTS

NEW YORK POWER AUTHORITY INDIAN POINT UNIT NO.3	
INT-1-4208 LOOP 32 2" & 1.5" LINE 42 SEAL INJECTION INT-1-4209 LOOP 32 2" LINE 82 DRAIN	
INT-1-4208 & INT-1-4209	REV. 3

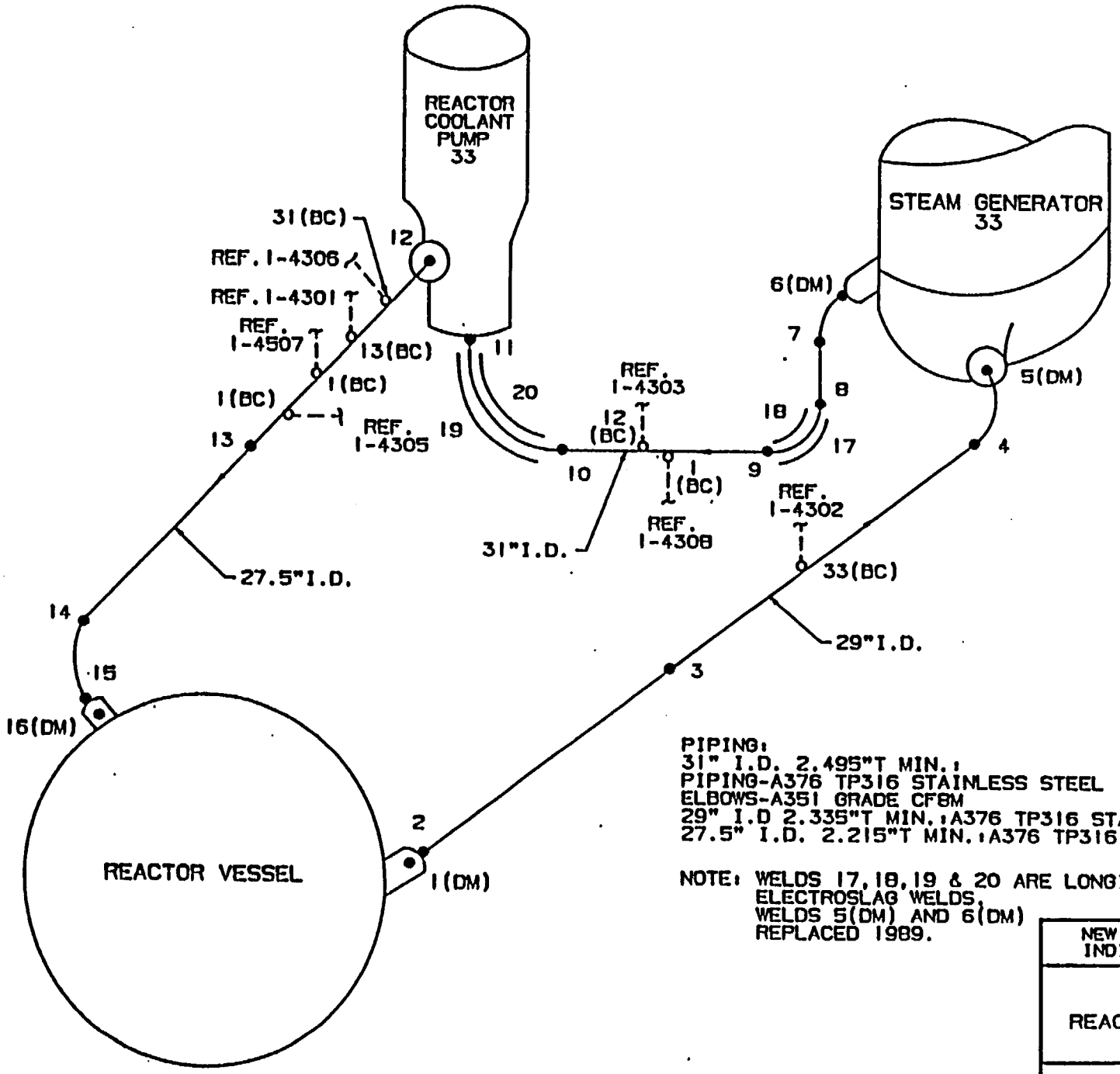

PIPING:
31" I.D. 2.495"T MIN.:
PIPING-A376 TP316 STAINLESS STEEL
ELBOWS-A351 GRADE CF8M
29" I.D 2.335"T MIN.:A376 TP316 STAINLESS STEEL
27.5" I.D. 2.215"T MIN.:A376 TP316 STAINLESS STEEL

NOTE: WELDS 17,18,19 & 20 ARE LONGITUDINAL ELECTROSLAG WELDS.
WELDS 5(DM) AND 6(DM) REPLACED 1989.

NEW YORK POWER AUTHORITY INDIAN POINT UNIT NO.3	
LOOP 33 REACTOR COOLANT PIPE	
INT-1-4300	REV. 4

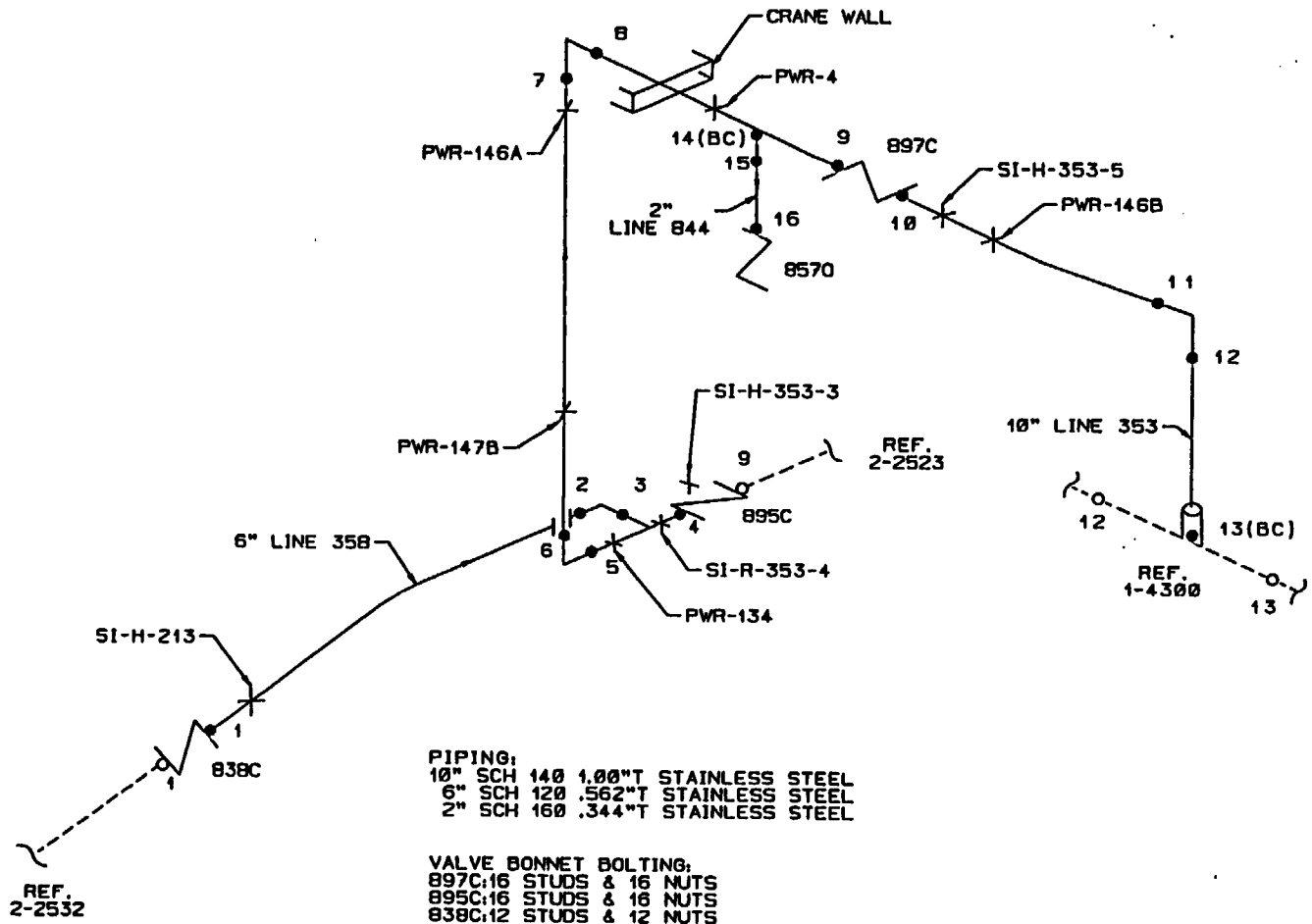

PIPING:
10" SCH 140 1.00"T STAINLESS STEEL
6" SCH 120 .562"T STAINLESS STEEL
2" SCH 160 .344"T STAINLESS STEEL

VALVE BONNET BOLTING:
897C:16 STUDS & 16 NUTS
895C:16 STUDS & 16 NUTS
838C:12 STUDS & 12 NUTS
8570:NOT APPLICABLE

VALVE MANUFACTURER:
897C:DARLING
895C:DARLING
838C:VELAN

INTEGRALLY WELDED ATTACHMENTS:
PWR-4: 0.75"T
PWR-134:0.50"T
PWR-146A:0.0625"T

NOTE: INTEGRALLY WELDED LUG 0.50"T WITH NO SUPPORT ATTACHED LOCATED BETWEEN WELDS 7 & 8.

NEW YORK POWER AUTHORITY INDIAN POINT UNIT NO.3	
10" LINE 353 ACCUMULATOR DISCHARGE,6" LINE 358 RHR & 2" LINE 844 SIS	
INT-1-4301	REV. 5

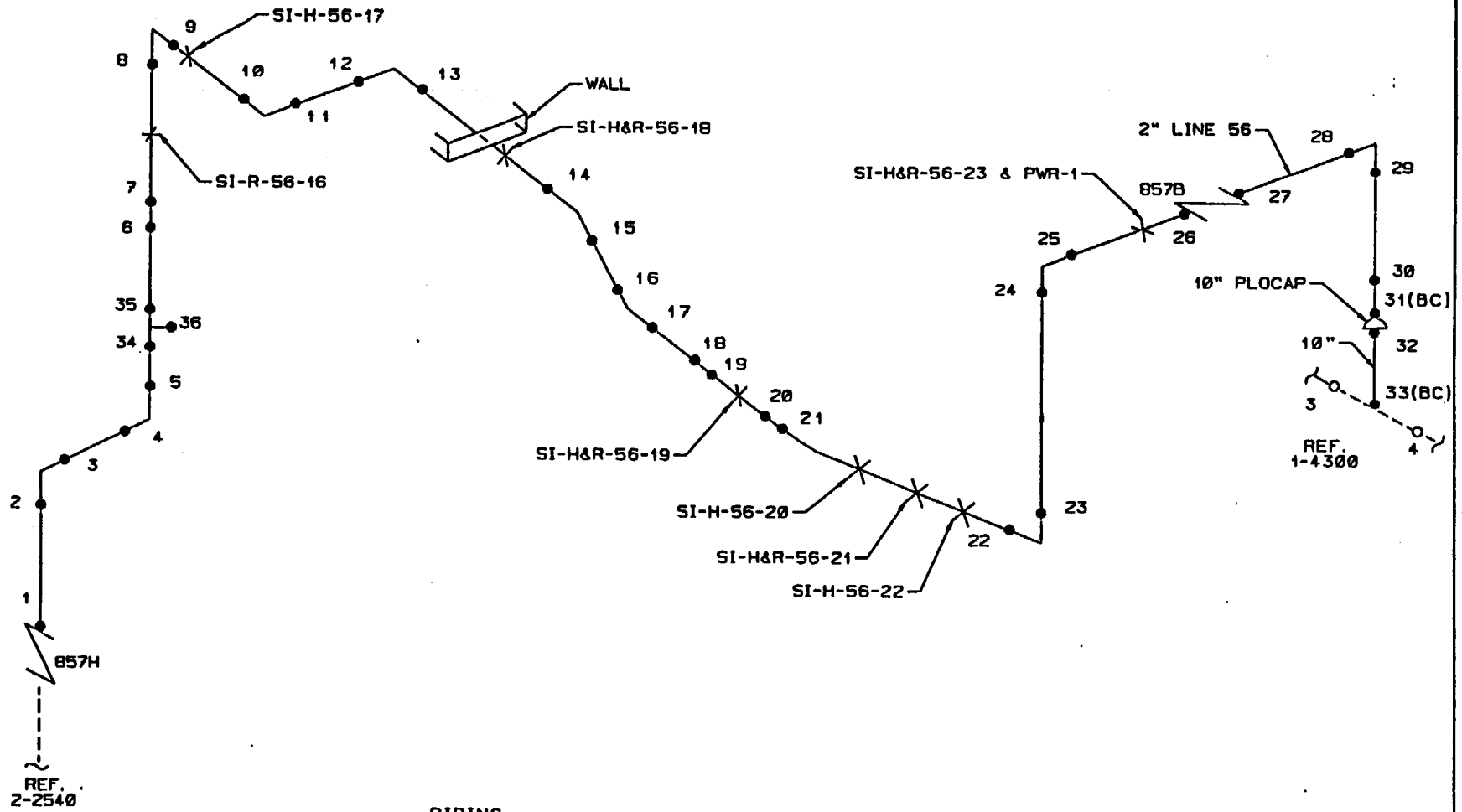

PIPING:
10" SCH 140 1.00"T STAINLESS STEEL
2" SCH 160 .344"T STAINLESS STEEL

VALVE BONNET BOLTING:
857B:NOT APPLICABLE
857H:NOT APPLICABLE

VALVE MANUFACTURER:
857B:NOT APPLICABLE
857H:NOT APPLICABLE

INTEGRALLY WELDED ATTACHMENTS:
PWR-1: 0.250"T

NOTE: WELDS 34, 35 & 36
ADDED IN 1997

NEW YORK POWER AUTHORITY INDIAN POINT UNIT NO.3	
LOOP 33 10" PLOCAP LOOP 33 2" LINE 56 SIS HOTLEG	
INT-1-4302	REV. 6

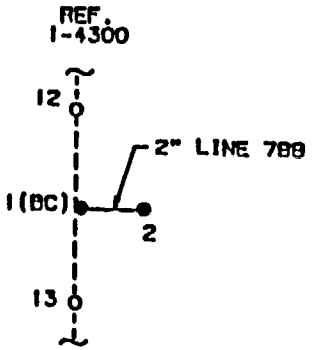

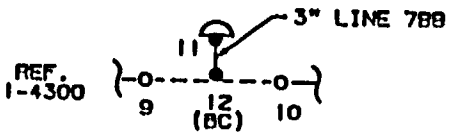

PIPING:
3.0" SCH 160 .438"T STAINLESS STEEL
2.0" SCH 160 .344"T STAINLESS STEEL

NOTE: INT-1-4303 3" LINE 788 DELETED AND CAPPED 1989.WELD 11 INSTALLED 1989.
INT-1-4304 2" LINE 789 DELETED 1989.
INT-1-4305 2" LINE 788 DELETED AND BOSSED 1989.WELD 2 INSTALLED 1989.

NEW YORK POWER AUTHORITY INDIAN POINT UNIT NO.3	
INT-1-4303 LOOP 33 3" LINE 788 RTD INT-1-4305 LOOP 33 2" LINE 788 RTD	
INT-1-4303 & INT-1-4305	REV. 6

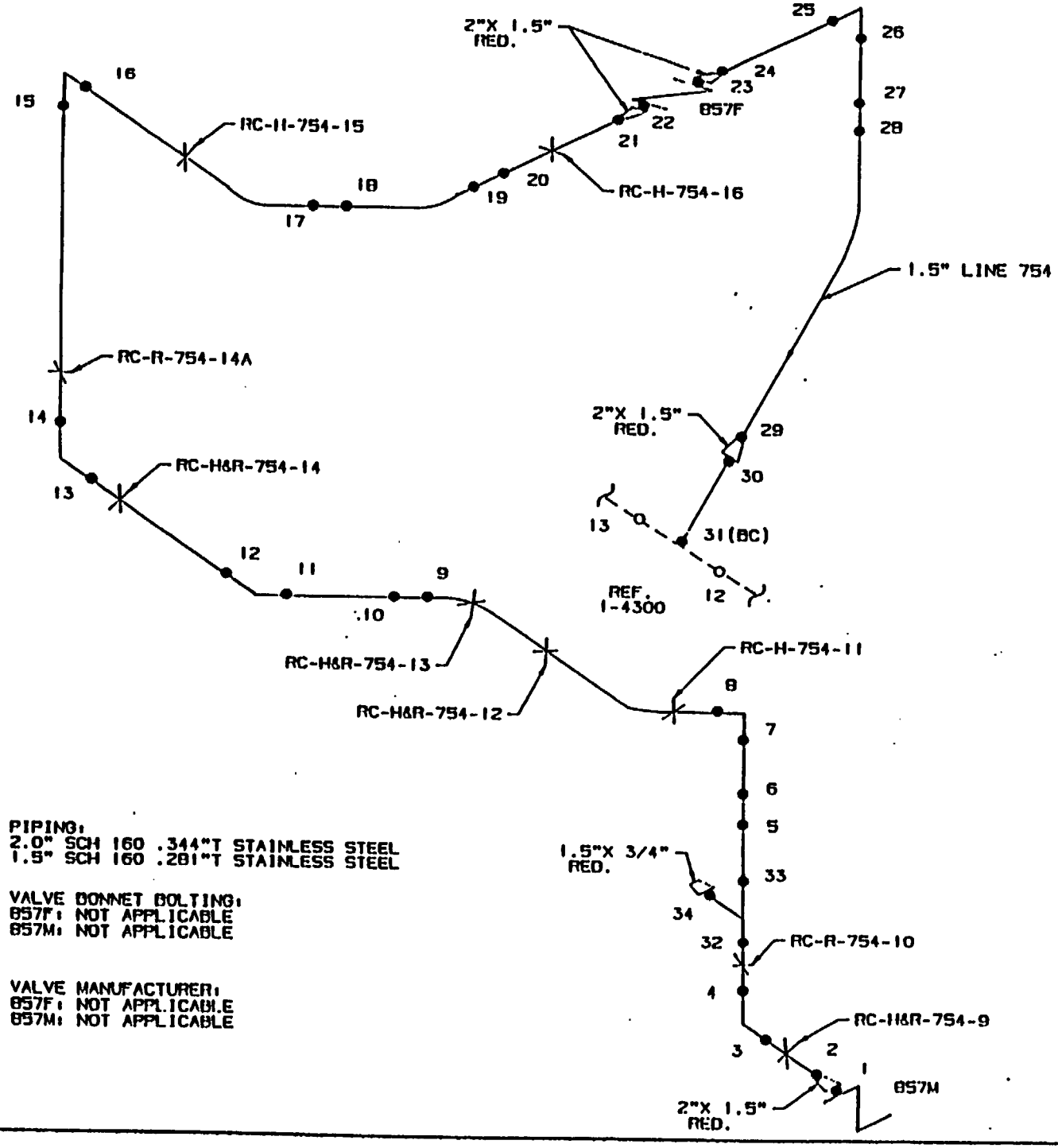

PIPING:
2.0" SCH 160 .344"T STAINLESS STEEL
1.5" SCH 160 .281"T STAINLESS STEEL

VALVE BONNET BOLTING:
857F: NOT APPLICABLE
857M: NOT APPLICABLE

VALVE MANUFACTURER:
857F: NOT APPLICABLE
857M: NOT APPLICABLE

NEW YORK POWER AUTHORITY INDIAN POINT UNIT NO.3	
LOOP 33 2" & 1.5" LINE 754 SIS COLDLEG	
INT-I-4306	REV. 4

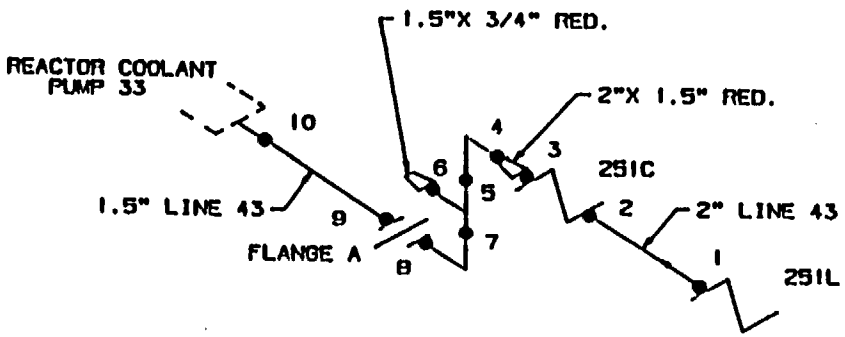

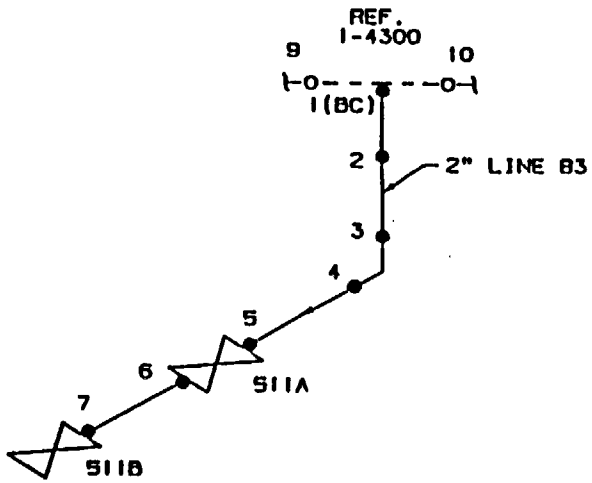

PIPING:
2.0" SCH 160 .344"T STAINLESS STEEL
1.5" SCH 160 .281"T STAINLESS STEEL

VALVE BONNET BOLTING:
251C:NOT APPLIACBLE
251L:NOT APPLIACBLE
511A:NOT APPLICABLE
511B:NOT APPLICABLE

VALVE MANUFACTURER:
251C:NOT APPLICABLE
251L:NOT APPLICABLE
511A:NOT APPLICABLE
511B:NOT APPLICABLE

FLANGE BOLTING:
FLANGE A:4 STUDS & 8 NUTS

NEW YORK POWER AUTHORITY INDIAN POINT UNIT NO.3	
INT-1-4307 LOOP 33 2" & 1.5" LINE 43 SEAL INJECTION INT-1-4308 LOOP 33 2" LINE 83 DRAIN	
INT-1-4307 & INT-1-4308	REV. 3

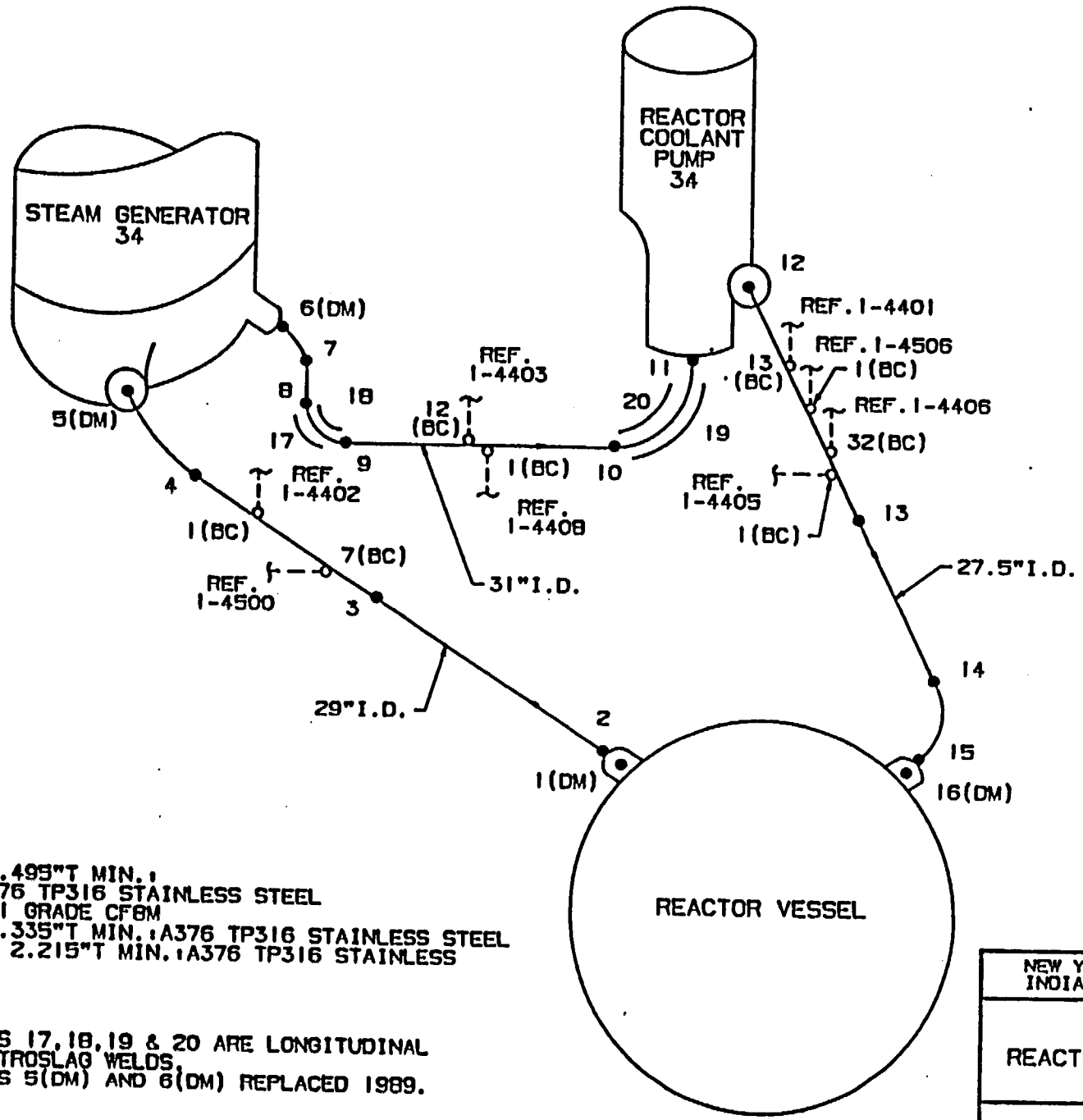

PIPING:
31" I.D. 2.495"T MIN.;
PIPING:-A376 TP316 STAINLESS STEEL
ELBOWS-A351 GRADE CF8M
29" I.D. 2.335"T MIN.:A376 TP316 STAINLESS STEEL
27.5" I.D. 2.215"T MIN.:A376 TP316 STAINLESS

NOTE: WELDS 17,18,19 & 20 ARE LONGITUDINAL ELECTROSLAG WELDS.
WELDS 5(DM) AND 6(DM) REPLACED 1989.

NEW YORK POWER AUTHORITY INDIAN POINT UNIT NO.3	
LOOP 34 REACTOR COOLANT PIPE	
INT-1-4400	REV. 4

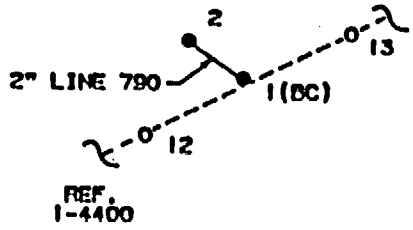

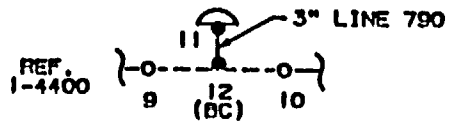

PIPING:
3.0" SCH 160 .438"T STAINLESS STEEL
2.0" SCH 160 .344"T STAINLESS STEEL

NOTE: INT-I-4403 3" LINE 790 DELETED AND CAPPED 1989.WELD 11 INSTALLED 1989.
INT-I-4404 2" LINE 791 DELETED 1989.
INT-I-4405 2" LINE 790 DELETED AND BOSSED 1989.WELD 2 INSTALLED 1989.

NEW YORK POWER AUTHORITY INDIAN POINT UNIT NO.3	
INT-I-4403 LOOP 34 3" LINE 790 RTD INT-I-4405 LOOP 34 2" LINE 790 RTD	
INT-I-4403 & INT-I-4405	REV. 6

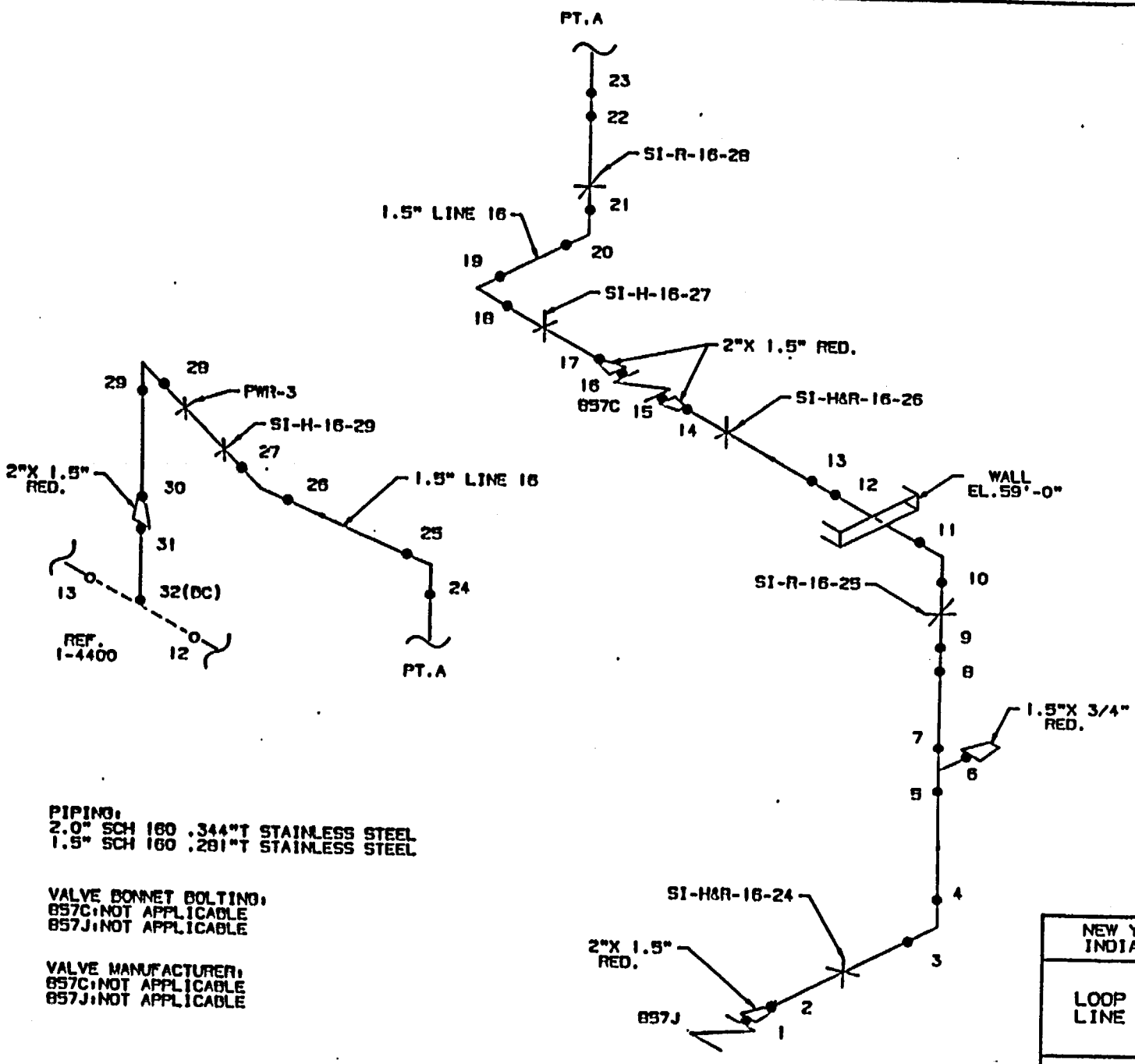

PIPING:
2.0" SCH 160 .344"T STAINLESS STEEL
1.5" SCH 160 .281"T STAINLESS STEEL

VALVE BONNET BOLTING:
857C:NOT APPLICABLE
857J:NOT APPLICABLE

VALVE MANUFACTURER:
857C:NOT APPLICABLE
857J:NOT APPLICABLE

NEW YORK POWER AUTHORITY INDIAN POINT UNIT NO.3	
LOOP 34 2" & 1.5" LINE 16 SIS COLDLEG	
INT-I-4406	REV. 4

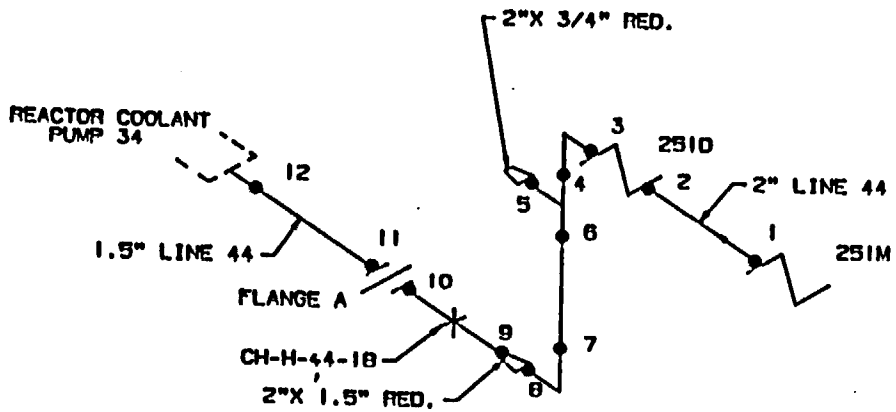

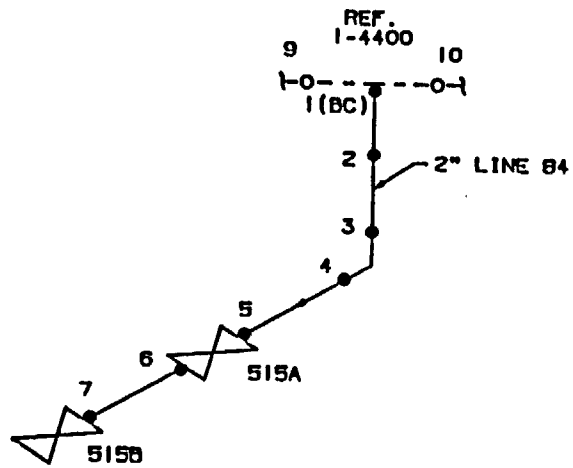

PIPING:
2.0" SCH 160 .344"T STAINLESS STEEL
1.5" SCH 160 .281"T STAINLESS STEEL

VALVE BONNET BOLTING:
251D:NOT APPLIACBLE
251M:NOT APPLIACBLE
515A:NOT APPLICABLE
515B:NOT APPLICABLE

VALVE MANUFACTURER:
251D:NOT APPLICABLE
251M:NOT APPLICABLE
515A:NOT APPLICABLE
515B:NOT APPLICABLE

FLANGE BOLTING:
FLANGE A:4 STUDS & 8 NUTS

NEW YORK POWER AUTHORITY INDIAN POINT UNIT NO.3	
INT-1-4407 LOOP 34 2" & 1.5" LINE 44 SEAL INJECTION INT-1-4408 LOOP 34 2" LINE 84 DRAIN	
INT-1-4407 & INT-1-4408	REV. 3

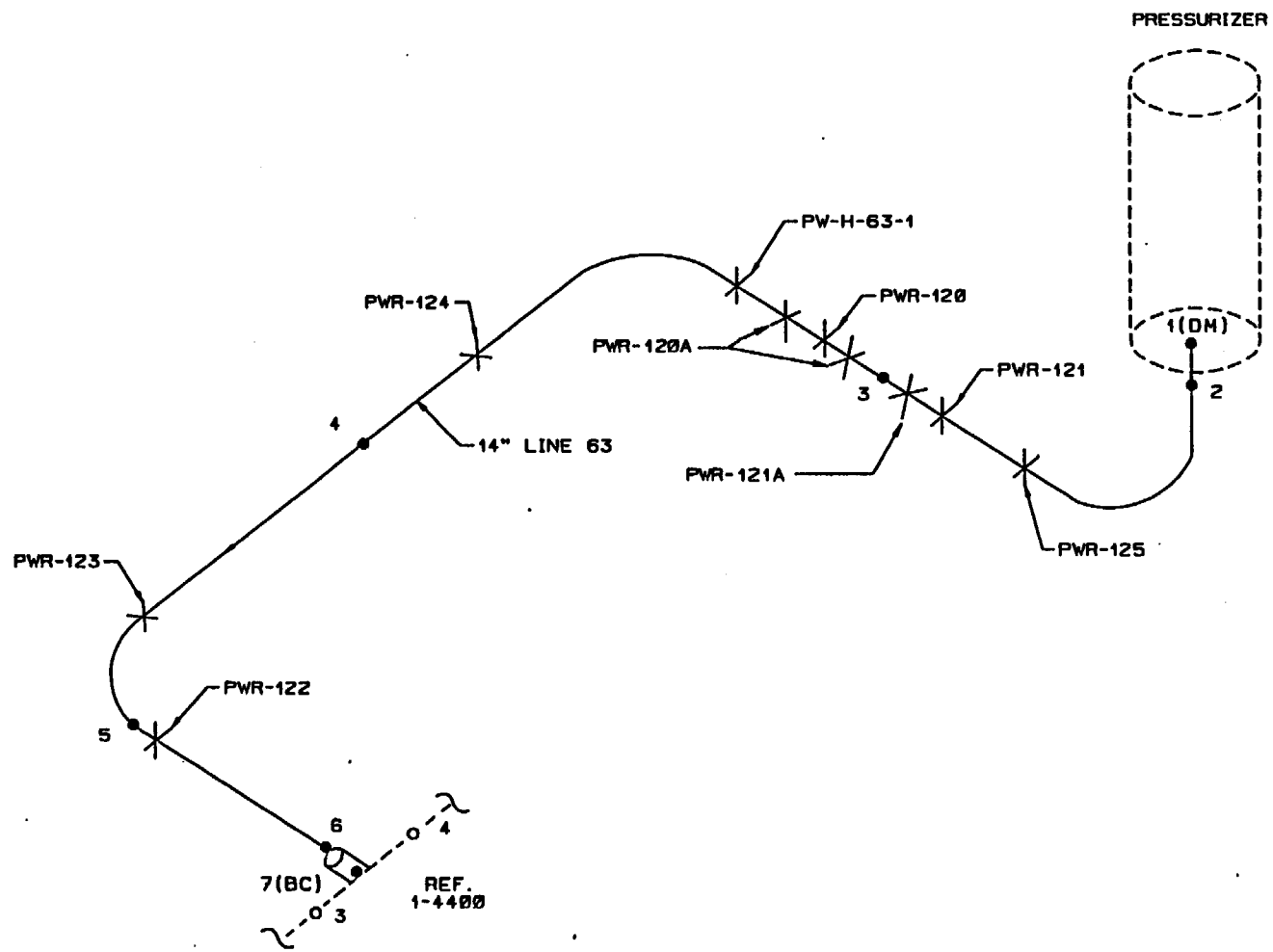

PIPING:
14" SCH 140 1.250"T STAINLESS STEEL

INTEGRALLY WELDED ATTACHMENTS:
PWR-120:1.0"T
PWR-121:1.0"T

NEW YORK POWER AUTHORITY INDIAN POINT UNIT NO.3	
14" LINE 63 PRESSURIZER SURGE	
INT-1-4500	REV. 6

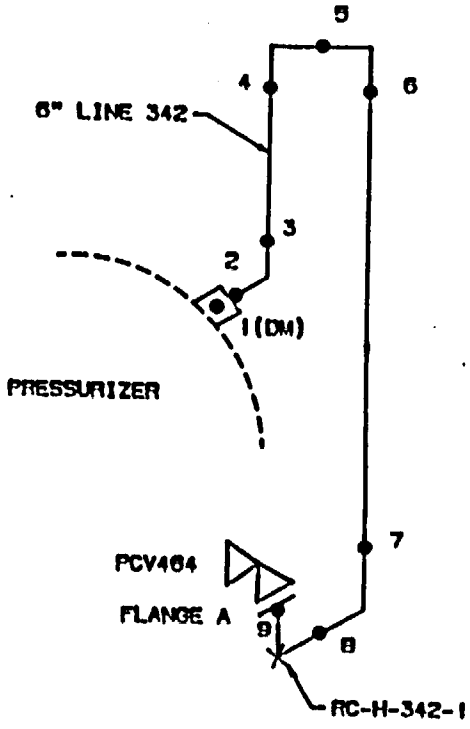

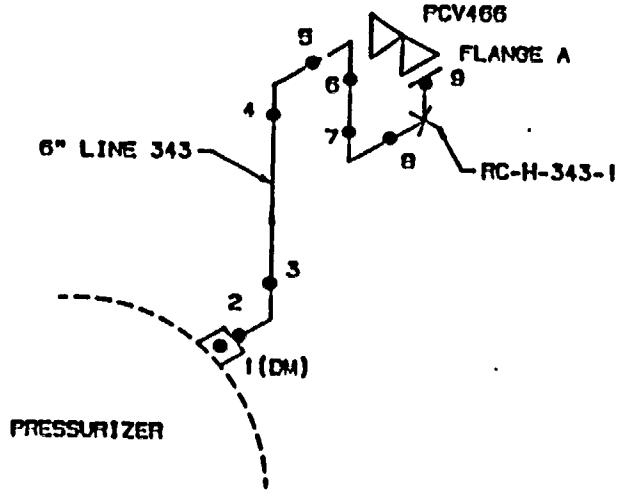

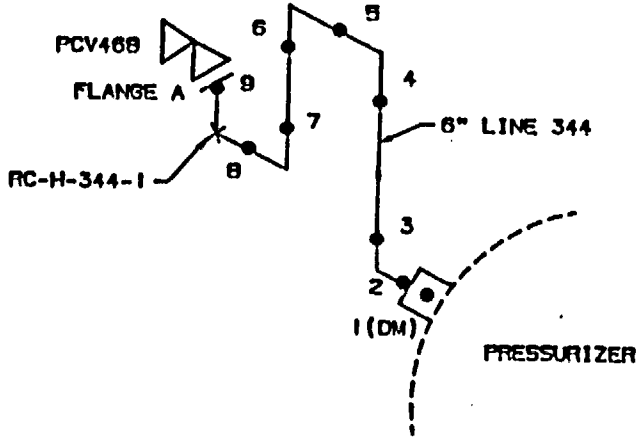

PIPING:
6.0" SCH 120 .562"T STAINLESS STEEL

VALVE BONNET BOLTING:
PCV464:8 STUDS & 8 NUTS
PCV466:8 STUDS & 8 NUTS
PCV468:8 STUDS & 8 NUTS

VALVE MANUFACTURER:
PCV464:CROSBY
PCV466:CROSBY
PCV468:CROSBY

FLANGE BOLTING:
FLANGE A:12 STUDS & 24 NUTS
FLANGE A:12 STUDS & 24 NUTS
FLANGE A:12 STUDS & 24 NUTS

INTEGRALLY WELDED ATTACHMENTS:
RC-H-342-1:0.216"T
RC-H-343-1:0.216"T
RC-H-344-1:0.216"T

NEW YORK POWER AUTHORITY INDIAN POINT UNIT NO.3	
PRESSURIZER SAFETY INT-1-4501 6" LINE 342, INT-1-4502 6" LINE 343 & INT-1-4503 6" LINE 344	
INT-1-4501, INT-1-4502 & INT-1-4503	REV. 4

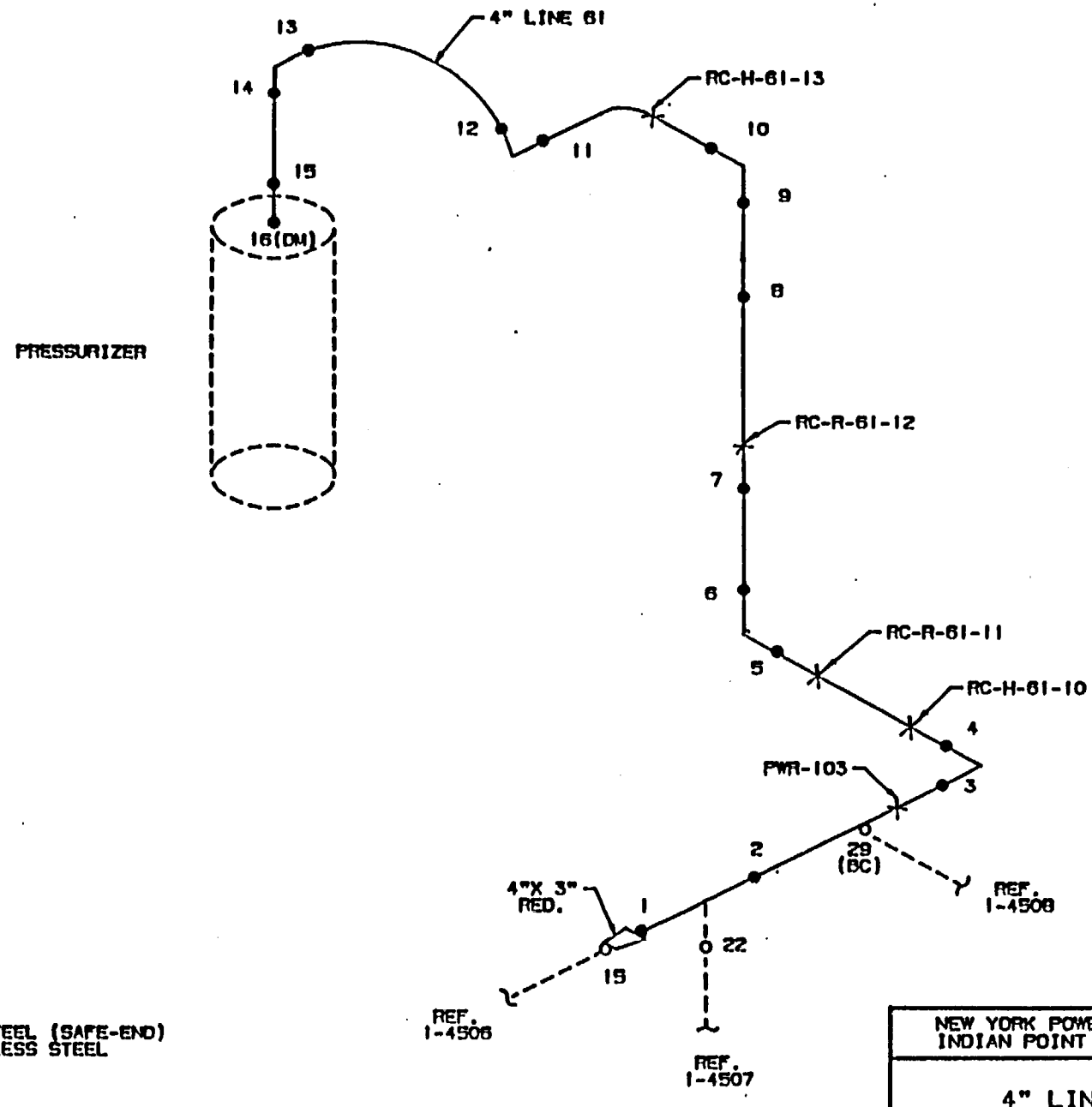

PIPING:
4" -.687"T STAINLESS STEEL (SAFE-END)
4" SCH 120 .438"T STAINLESS STEEL

NEW YORK POWER AUTHORITY
INDIAN POINT UNIT NO.3

4" LINE 61
PRESSURIZER SPRAY

INT-1-4504

REV. 5

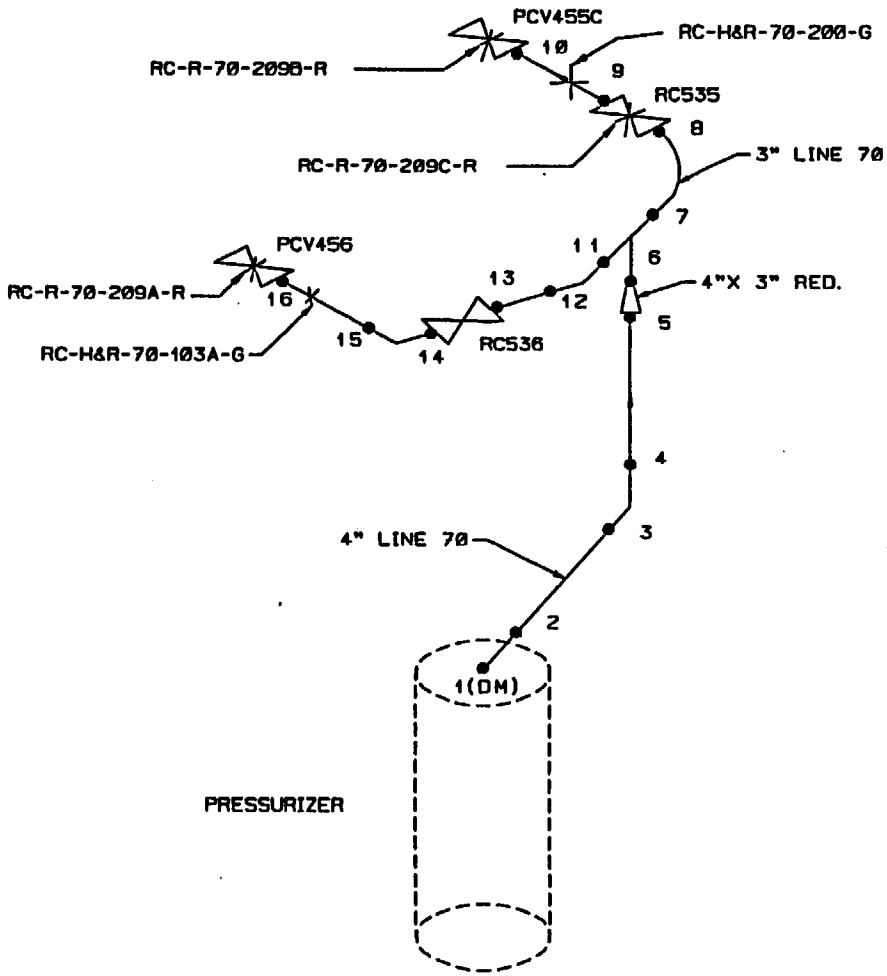

PIPING:
4" SCH 160 .531"T STAINLESS STEEL
3" SCH 160 .438"T STAINLESS STEEL

VALVE BONNET BOLTING:
RC535:12 STUDS & 12 NUTS
RC536:12 STUDS & 12 NUTS
PCV455C:6 STUDS & 6 NUTS
PCV456:6 STUDS & 6 NUTS

VALVE MANUFACTURER:
RC535:NOT APPLICABLE
RC536:NOT APPLICABLE
PCV455C:NOT APPLICABLE
PCV456:NOT APPLICABLE

NOTE:WELDS 10 & 16 INSTALLED 1977.

NEW YORK POWER AUTHORITY INDIAN POINT UNIT NO.3	
4" & 3" LINE 70 PRESSURIZER RELIEF	
INT-1-4505	REV. 6

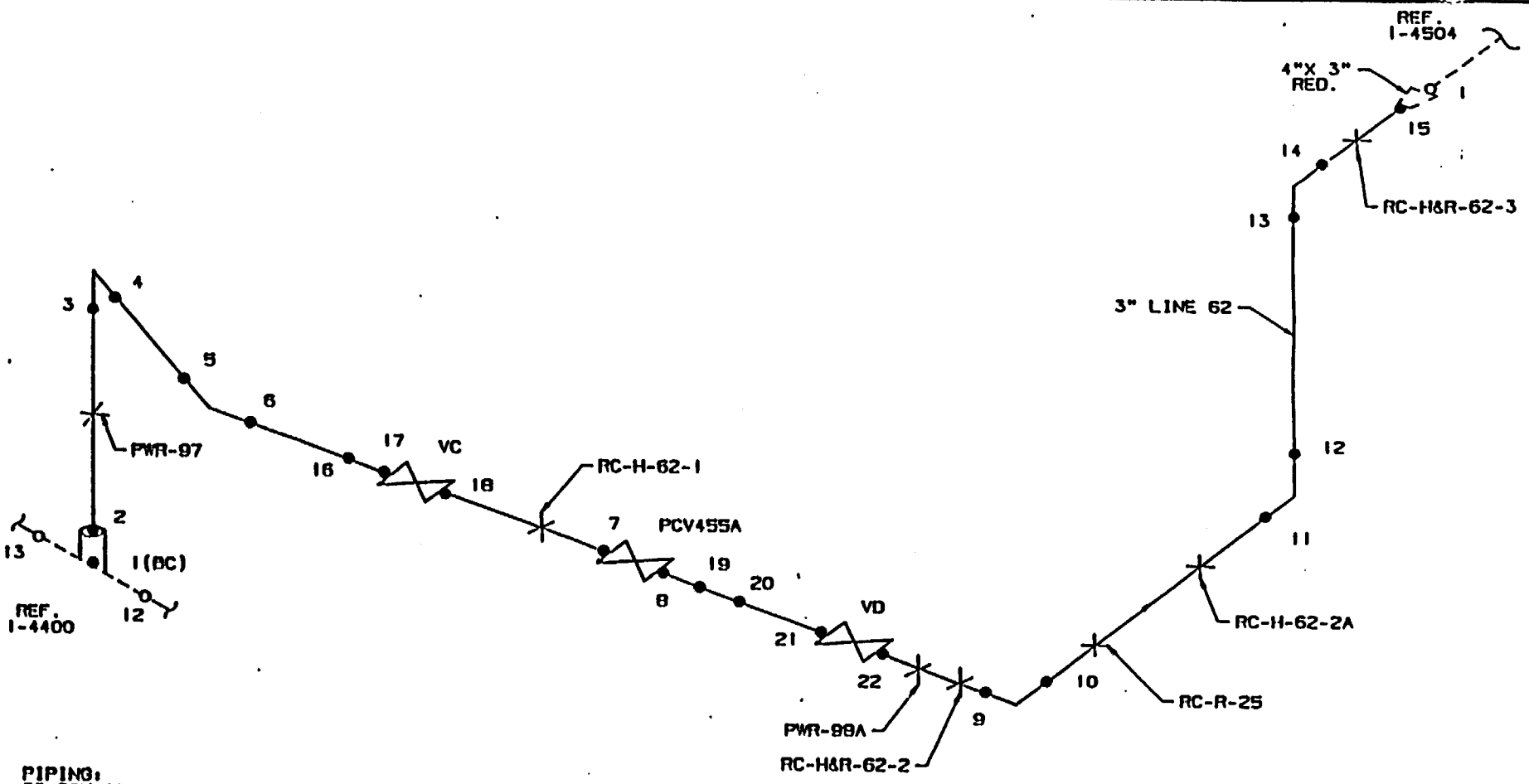

PIPING:
3" SCH 160 .438"T STAINLESS STEEL

VALVE BONNET BOLTING:
PCV455A:6 STUDS & 6 NUTS
VC:NOT APPLICABLE
VD:NOT APPLICABLE

VALVE MANUFACTURER:
PCV455A:NOT APPLICABLE
VC:NOT APPLICABLE
VD:NOT APPLICABLE

NOTE:
WELDS 16 THRU 22 ADDED 1979
WELDS 9 & 10 REPLACED 1979
VALVES VC & VD ADDED 1979
HANGER LOCATIONS REVISED 1979

NEW YORK POWER AUTHORITY INDIAN POINT UNIT NO.3	
3" LINE 62 PRESSURIZER SPRAY	
INT-I-4506	REV. 5

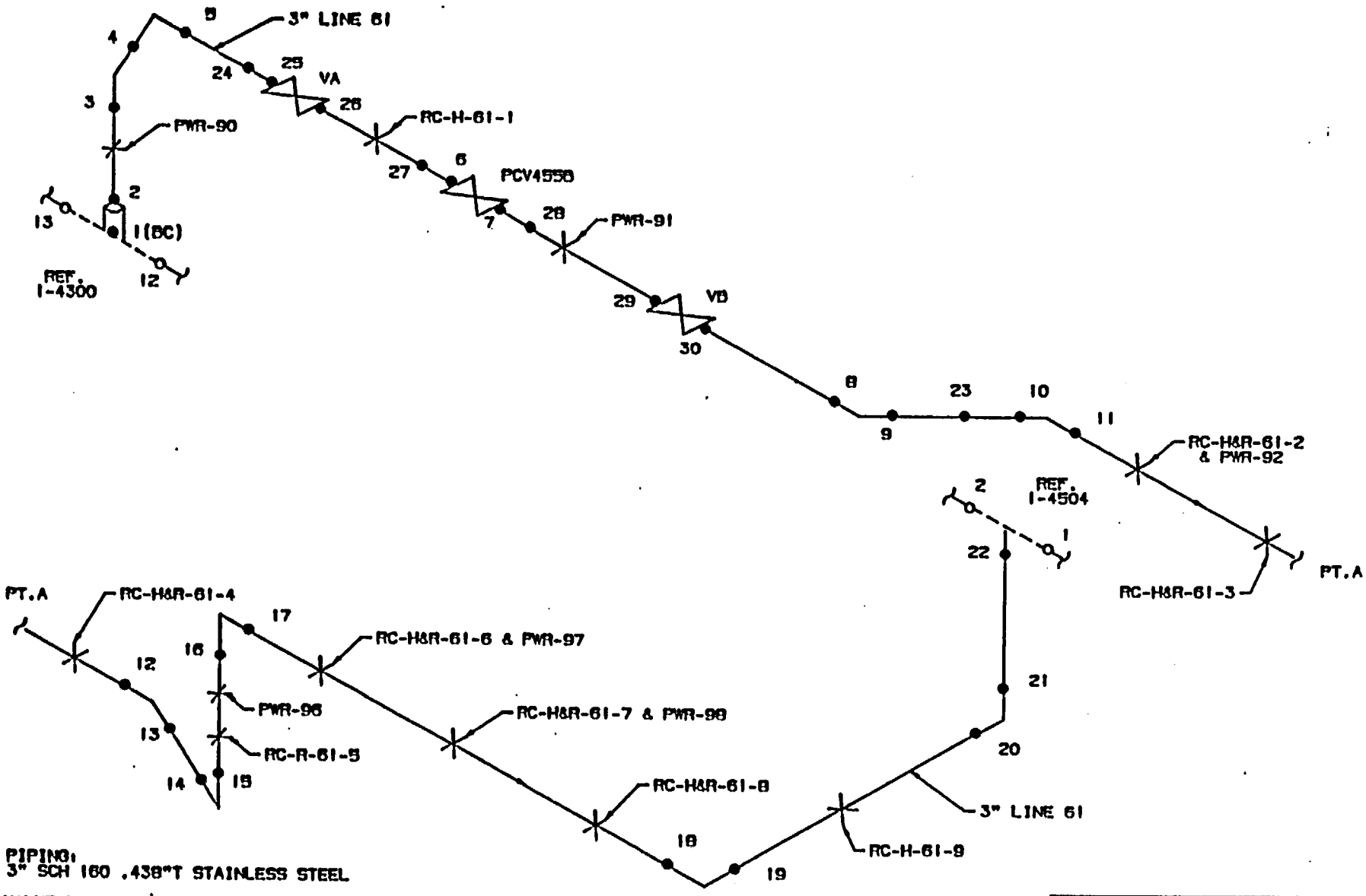

PIPING:
3" SCH 160 .438"T STAINLESS STEEL

VALVE BONNET BOLTING:
PCV4558:6 STUDS & 6 NUTS
VA:NOT APPLICABLE
VB:NOT APPLICABLE

VALVE MANUFACTURER:
PCV4558:NOT APPLICABLE
VA:NOT APPLICABLE
VB:NOT APPLICABLE

INTEGRALLLY WELDED ATTACHMENTS:
RC-H-61-9:0.145"T

NOTE:
WELDS 23 THRU 30 ADDED 1979
WELDS 6 & 9 REPLACED 1979
VALVES VA & VB ADDED 1979
HANGER LOCATIONS REVISED 1979

NEW YORK POWER AUTHORITY
INDIAN POINT UNIT NO.3

3" LINE 61
PRESSURIZER SPRAY

INT-I-4507

REV. 6

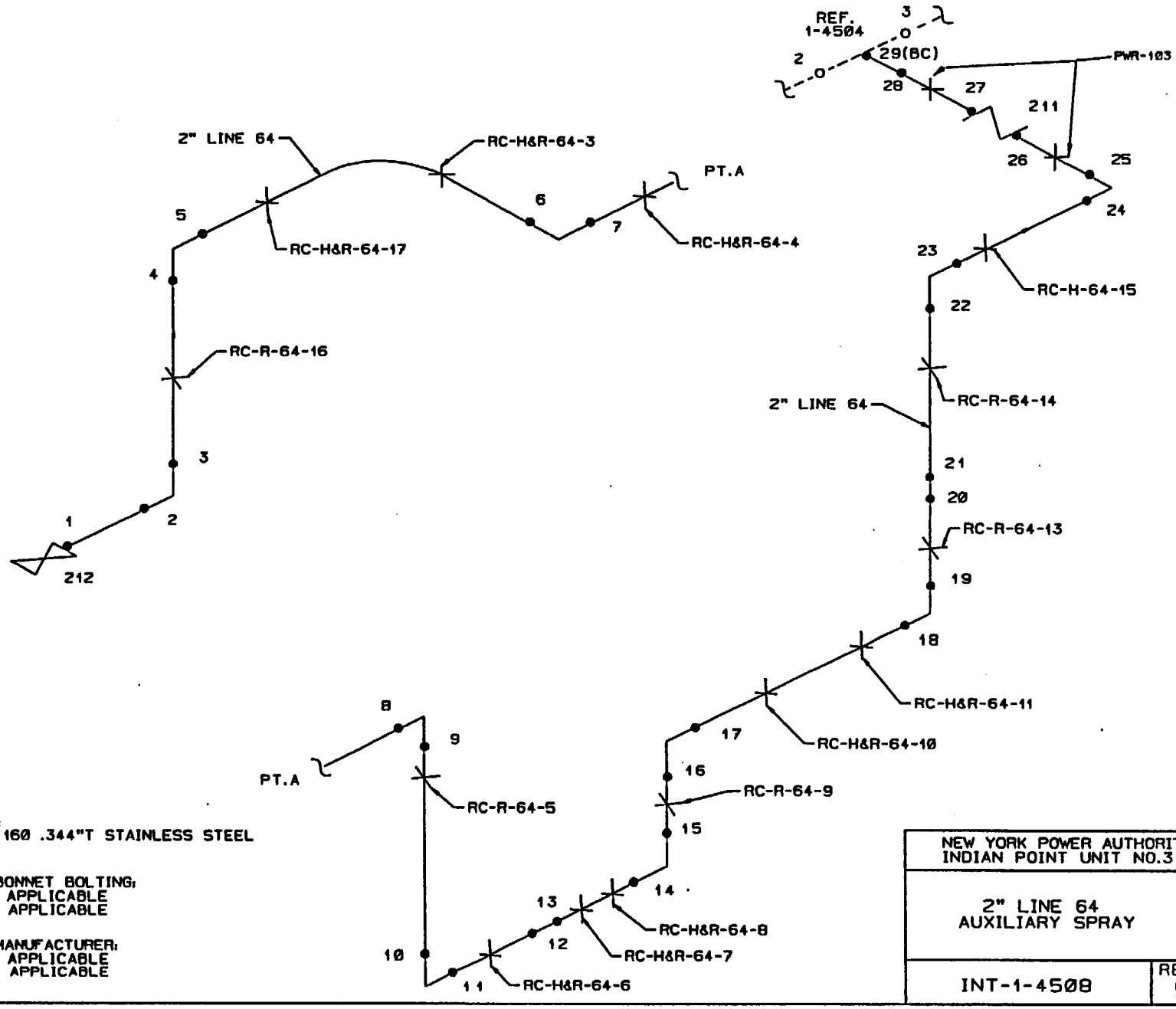

PIPING:
2" SCH 160 .344"T STAINLESS STEEL

VALVE BONNET BOLTING:
211:NOT APPLICABLE
212:NOT APPLICABLE

VALVE MANUFACTURER:
211:NOT APPLICABLE
212:NOT APPLICABLE

NEW YORK POWER AUTHORITY INDIAN POINT UNIT NO.3	
2" LINE 64 AUXILIARY SPRAY	
INT-1-4508	REV. 5

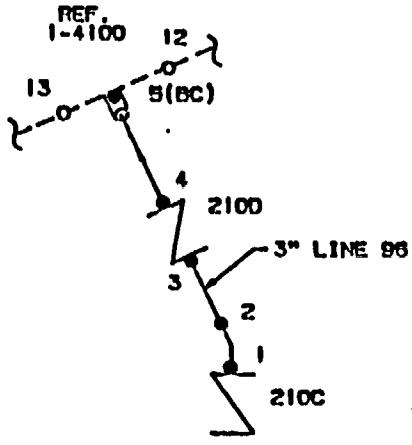

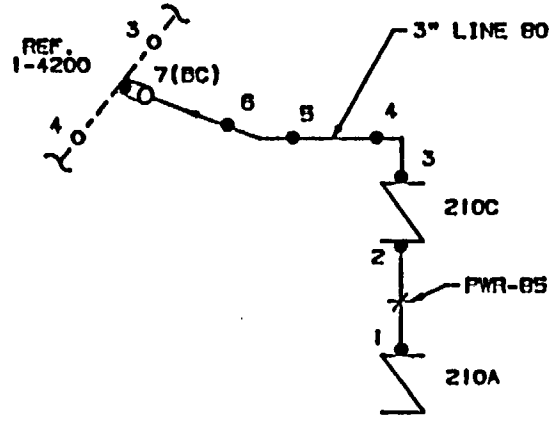

PIPING:
3.0" SCH 160 .438"T STAINLESS STEEL

VALVE BONNET BOLTING:
210A: 12 STUDS & 12 NUTS
210B: 12 STUDS & 12 NUTS
210C: 12 STUDS & 12 NUTS
210D: 12 STUDS & 12 NUTS

VALVE MANUFACTURER:
210A: NOT APPLICABLE
210B: NOT APPLICABLE
210C: NOT APPLICABLE
210D: NOT APPLICABLE

NEW YORK POWER AUTHORITY INDIAN POINT UNIT NO.3	
INT-1-4600 LOOP 31 3" LINE 96 CHARGING INT-1-4601 LOOP 32 3" LINE 80 CHARGING	
INT-1-4600 & INT-1-4601	REV. 4

REACTOR COOLANT PUMP

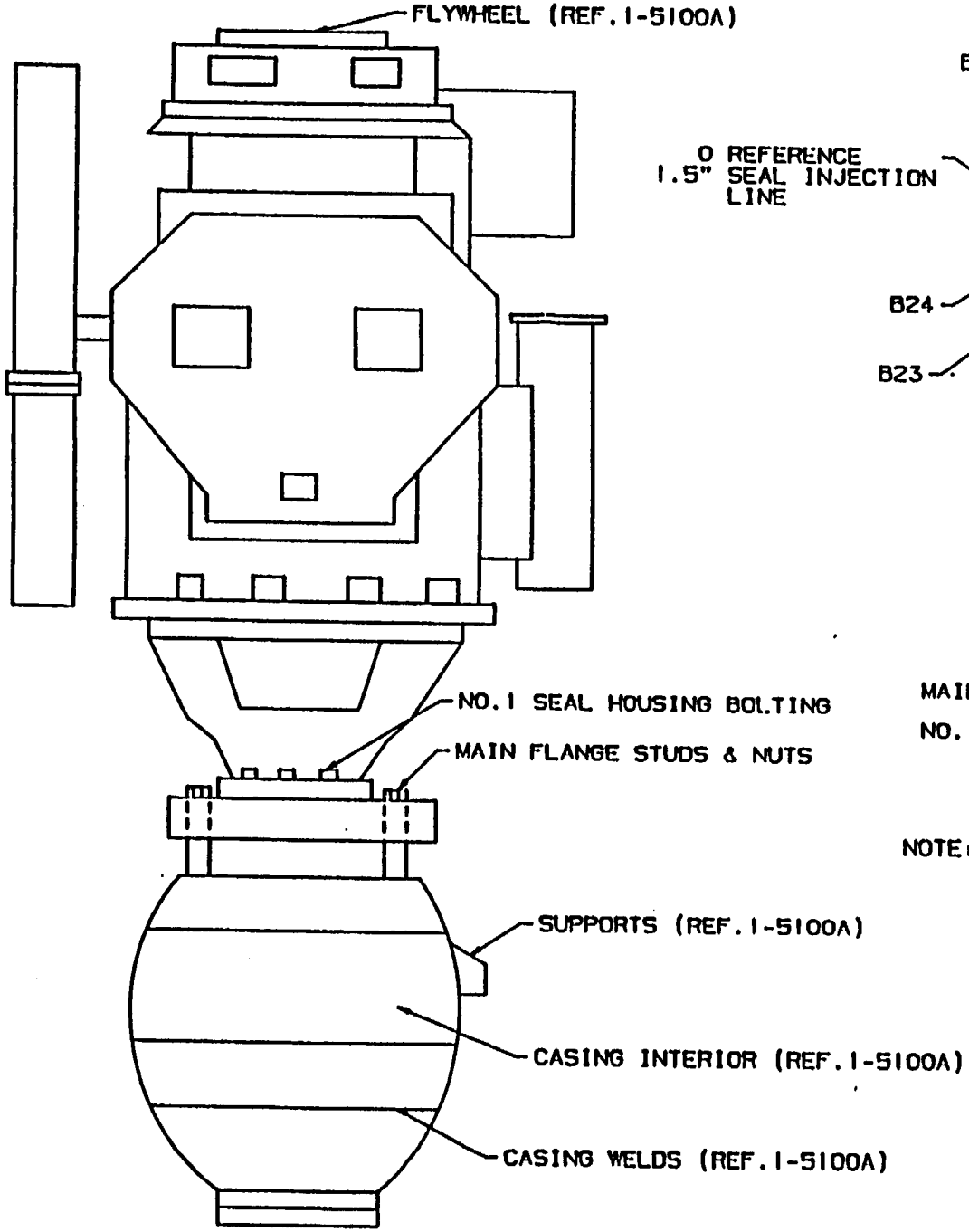

MAIN FLANGE STUDS & NUTS B1 THRU B24
&
NO. 1 SEAL HOUSING BOLTING B1 THRU B18

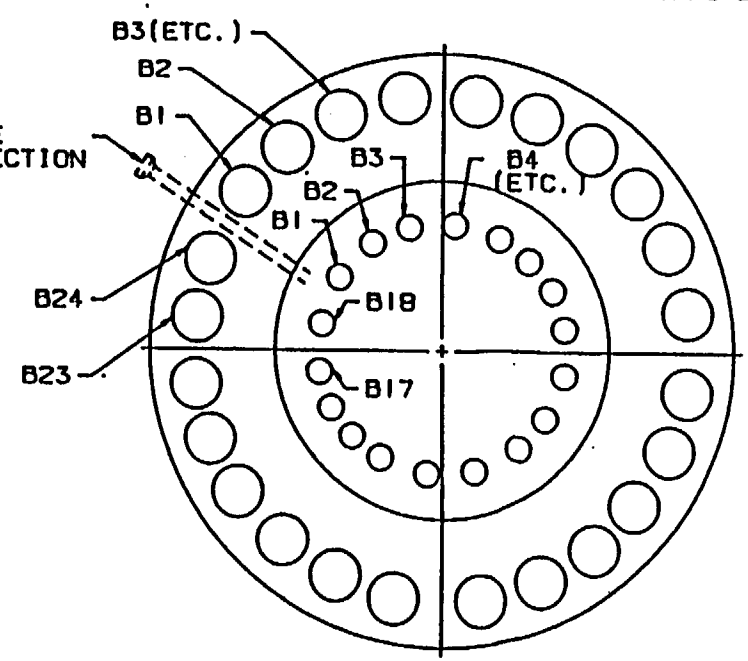

MAIN FLANGE STUDS & NUTS: 24-3.5" DIAMETER: 30.5" LENGTH
NO. 1 SEAL HOUSING BOLTS: 18-1.75" DIAMETER: 8.0" LENGTH

NOTE: BOLT, STUD OR NUT IDENTIFICATION PRECEDED BY REACTOR COOLANT PUMP DESIGNATION 31, 32, 33 OR 34 AS APPLICABLE.

NEW YORK POWER AUTHORITY INDIAN POINT UNIT NO. 3	
REACTOR COOLANT PUMPS RCPCP1-31, RCPCP2-32, RCPCP3-33 & RCPCP4-34	
INT-1-5100	REV. 4

REACTOR COOLANT PUMP
FLYWHEEL

HOLES 1,2,3 & 4: 0.875" DIAMETER FOR RC PUMPS 31,33 & 34

HOLES 1,2,3,4,5 & 6: 1.02" DIAMETER FOR RC PUMP 32

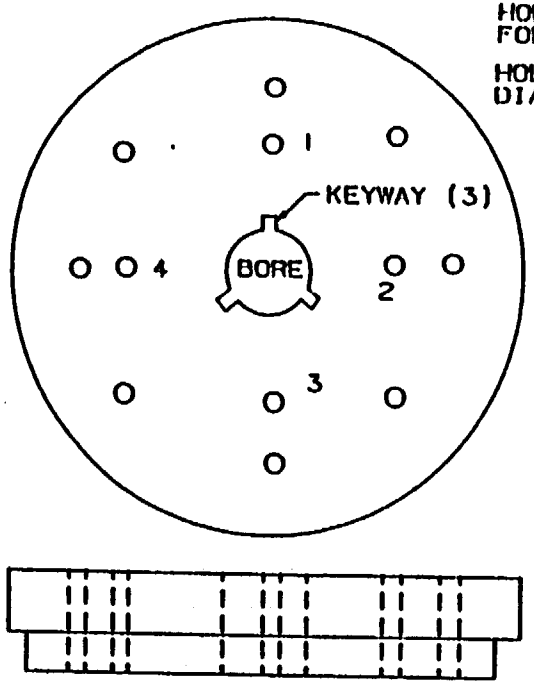

REACTOR COOLANT PUMP
CASING AND CASING WELDS

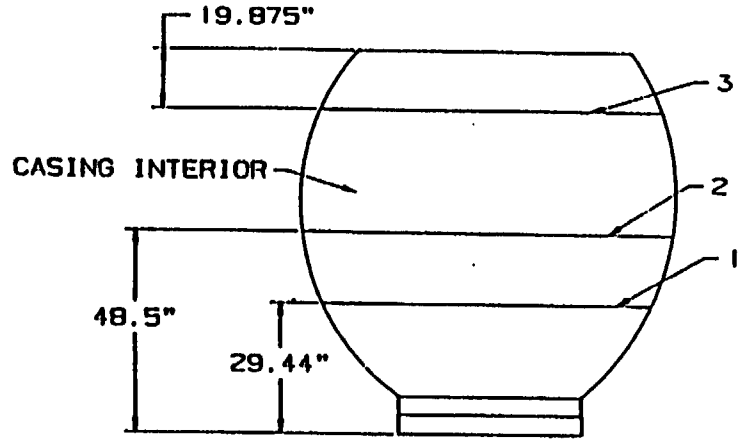

REACTOR COOLANT PUMP
SUPPORTS (WELDED ATTACHMENTS 3.0"T)

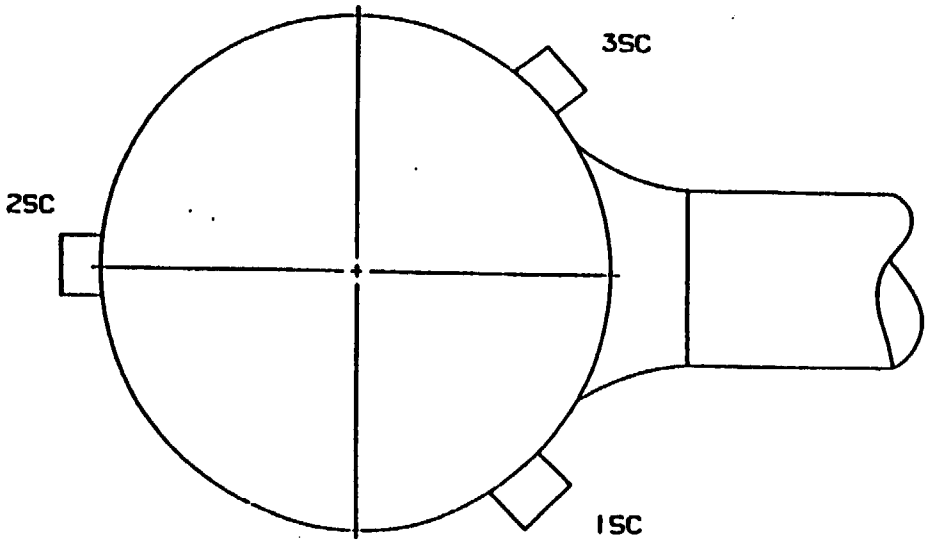

NOTE: CASING ,CASING WELD,FLYWHEEL AND SUPPORT IDENTIFICATION PRECEDED BY REACTOR COOLANT PUMP DESIGNATION 31,32,33 OR 34 AS APPLICABLE.

NEW YORK POWER AUTHORITY INDIAN POINT UNIT NO.3	
REACTOR COOLANT PUMPS RCPCP1-31,RCPCP2-32, RCPCP3-33 & RCPCP4-34	
INT-1-5100A	REV. 4

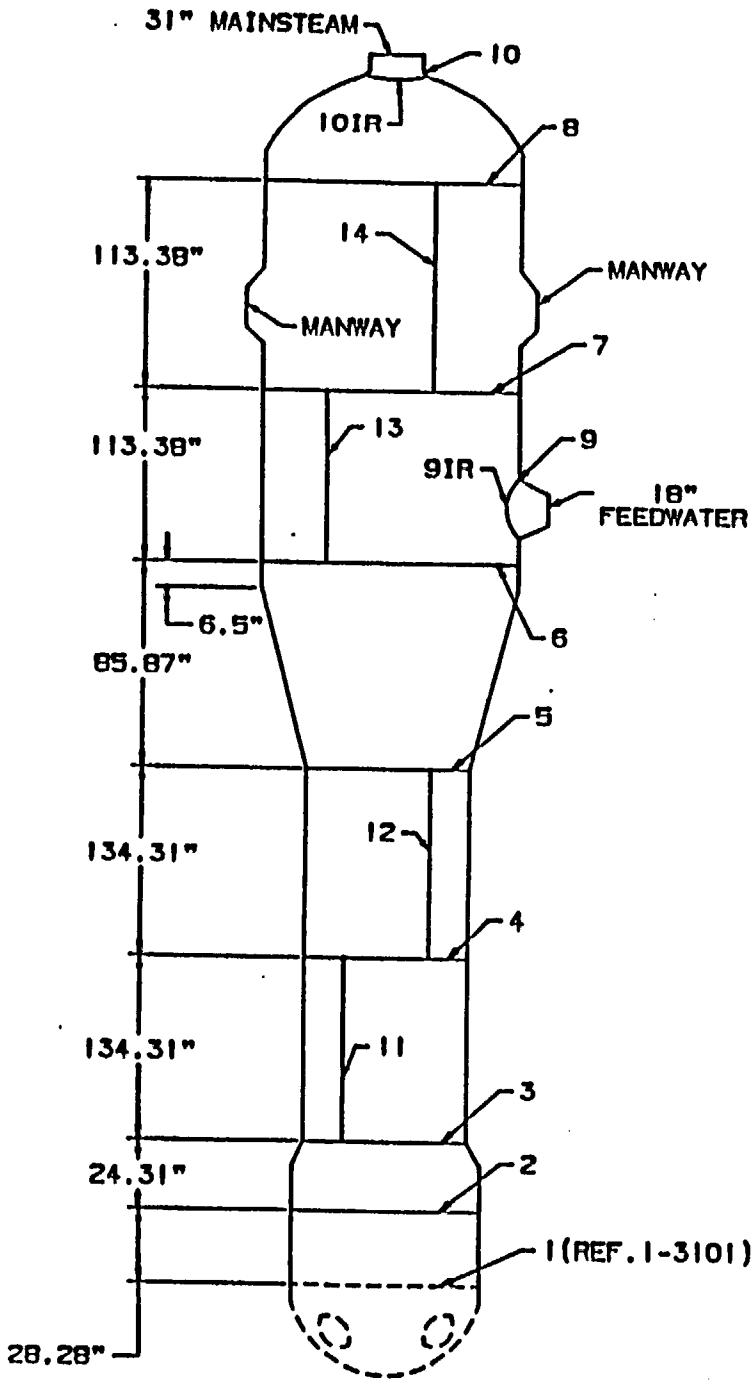

SHELL WELDS 3,4 & 5: 2.86"T
SA533 TYPE B CLASS 1 CARBON STEEL
DIAMETER:127.0";CIRCUMFERENCE:398.78"
0 REFERENCE WELDS 3 & 4:TOP CENTERLINE OF PRIMARY HOTLEG MANWAY(REF.1-3101)
0 REFERENCE WELD 5:TOP CENTERLINE OF FEEDWATER NOZZLE

SHELL WELDS 6 & 7: 3.7"T
SA533 TYPE B CLASS 1 CARBON STEEL
DIAMETER: 166.0";CIRCUMFERENCE:521.24"
0 REFERENCE:TOP CENTERLINE OF FEEDWATER NOZZLE

HEAD WELD 8: 4.0"T
SA533 TYPE B CLASS 1 CARBON STEEL
DIAMETER:166.0";CIRCUMFERENCE:521.24"
0 REFERENCE:TOP CENTERLINE OF FEEDWATER NOZZLE

TUBESHEET WELD 2: 4.0"T
SA508 CLASS 3 CARBON STEEL
DIAMETER:129.25";CIRCUMFERENCE:405.84"
0 REFERENCE:TOP CENTERLINE OF PRIMARY HOTLEG MANWAY(REF.1-3101)

TRANSITION CONE: 4.2"T
SA508 CLASS 3 CARBON STEEL

NOZZLE TO SHELL WELD 9 :3.7"T
NOZZLE TO SHELL WELD 10:4.0"T
SA 533 TYPE B CLASS 1 CARBON STEEL

NOZZLE INSIDE RADIUS SECTIONS 9IR & 10IR:
18" FEEDWATER AND 31" MAINSTEAM
SA 508 CLASS 3 CARBON STEEL

INTEGRALLY WELDED ATTACHMENTS:NOT APPLICABLE

COMPONENT SUPPORTS:REFERENCE INT-2-1101A

MANWAY STUDS AND NUTS: 2 MANWAYS EACH GENERATOR;
20 STUDS AND 20 NUTS EACH MANWAY
STUD DIAMETER:1.5"

NOTE:STEAM GENERATOR IDENTIFICATION 31,32,33 OR 34 PRECEDES WELD DESIGNATION AS APPLICABLE:

NOTE:WELDS 4,7,11,12,13 & 14 NON STRUCTURAL DISCONTINUITIES.

NEW YORK POWER AUTHORITY INDIAN POINT UNIT NO.3	
REPLACEMENT STEAM GENERATORS RCPCSG1-31,RCPCSG2-32, RCPCSG3-33 & RCPCSG4-34	
INT-2-1101	REV. 1

STEAM GENERATOR SUPPORTS

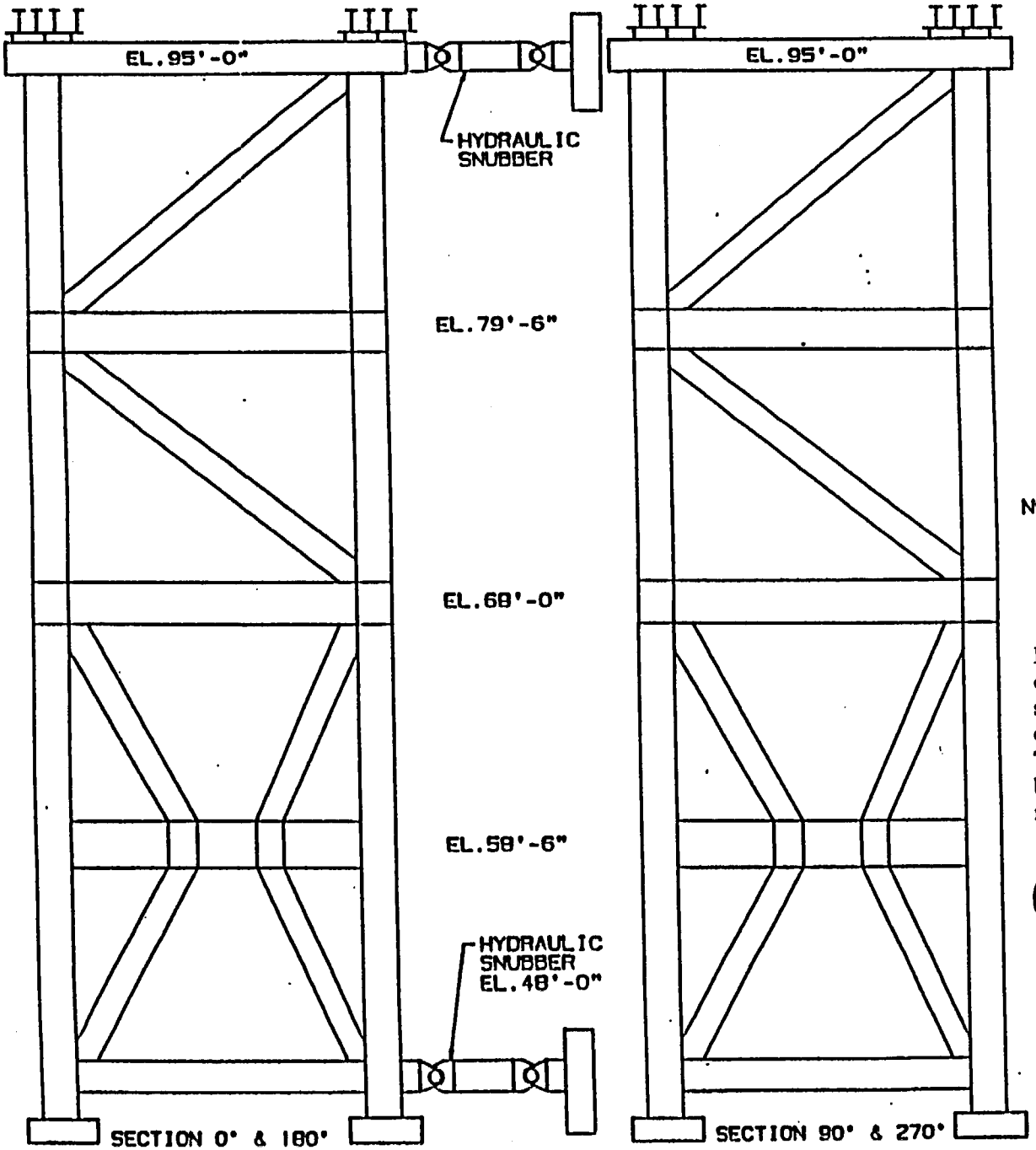

NOTE: STEAM GENERATOR IDENTITY 31,32,33 OR 34 PRECEDES SUPPORT AS APPLICABLE.

Based on NSE 97-3-176 STR, it was determined that the Steam Generator snubbers are no longer required for its original intended seismic support function. The oil reservoirs on these snubbers had been drained empty, and the S/G snubbers removed from the ISI population.

James R. Dellmann
06/07/00

NEW YORK POWER AUTHORITY INDIAN POINT UNIT NO.3	
REPLACEMENT STEAM GENERATORS RCPCSG1-31, RCPCSG2-32, RCPCSG3-33 & RCPCSG4-34	
INT-2-1101A	REV. 0

REGENERATIVE HEAT EXCHANGER CSAHRG1-31

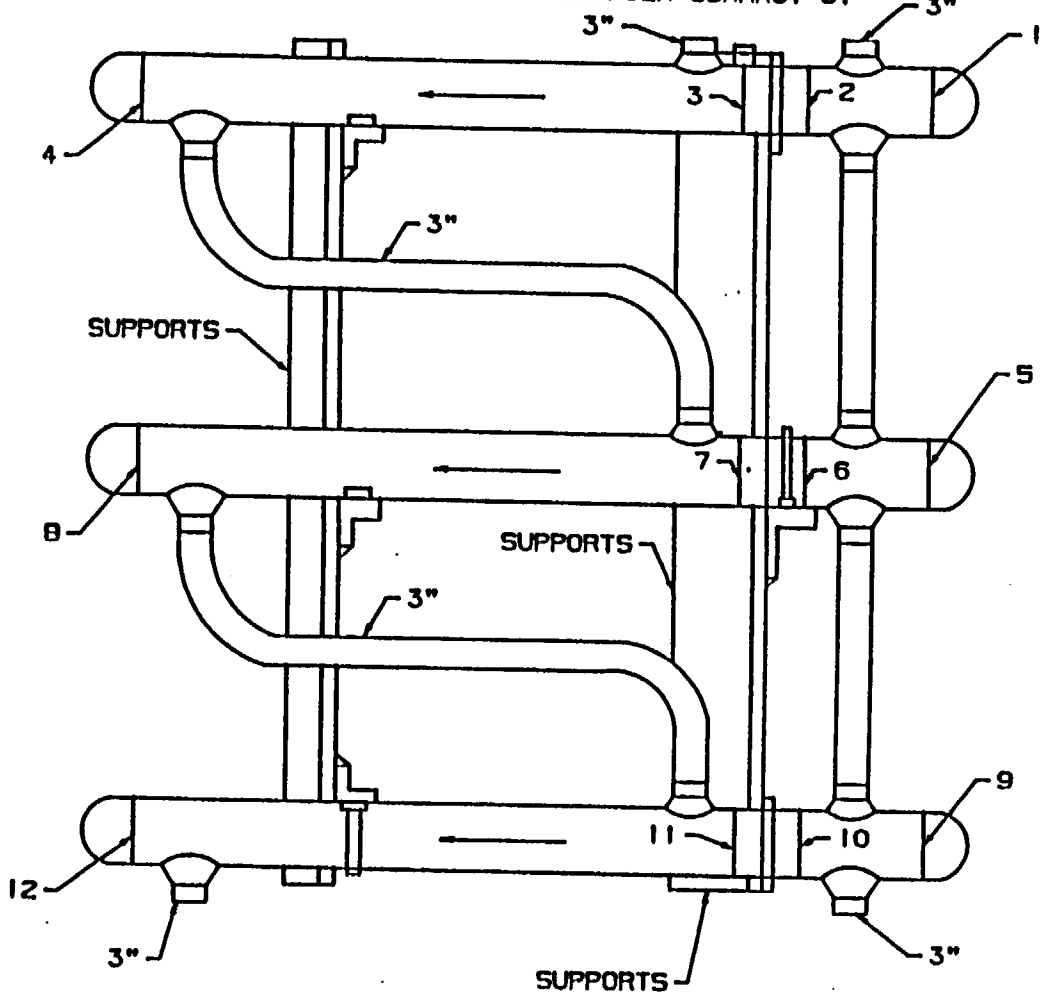

WELDS 1 THRU 12: 0.875"T A213 TP304 STAINLESS STEEL
DIAMETER:9.25":CIRCUMFERENCE:28.86"
NOZZLE IN VESSEL WELDS: 3" DIAMETER
INTEGRALLY WELDED ATTACHMENTS: NOT APPLICABLE
COMPONENT SUPPORTS: AS APPLICABLE
BOLTING: NOT APPLICABLE
0 REFERENCE: TOP CENTERLINE OF WELD

NEW YORK POWER AUTHORITY INDIAN POINT UNIT NO.3	
REGENERATIVE HEAT EXCHANGER CSAHRG1-31	
INT-2-1110	REV. 4

RESIDUAL HEAT EXCHANGER ACAHRS1-31

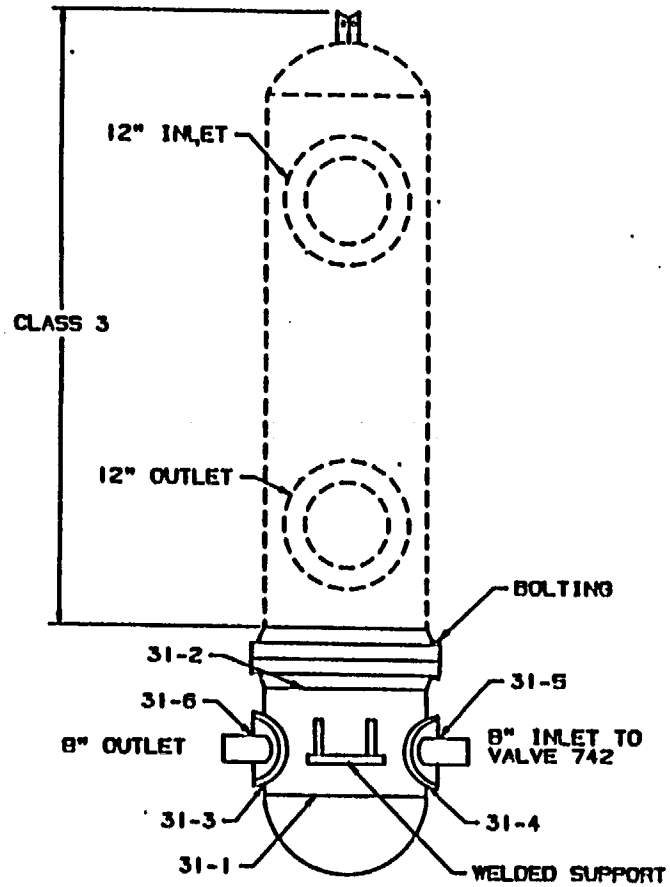

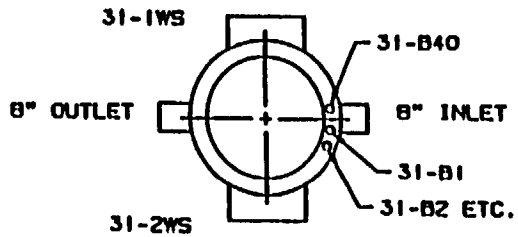

RESIDUAL HEAT EXCHANGER ACAHRS2-32

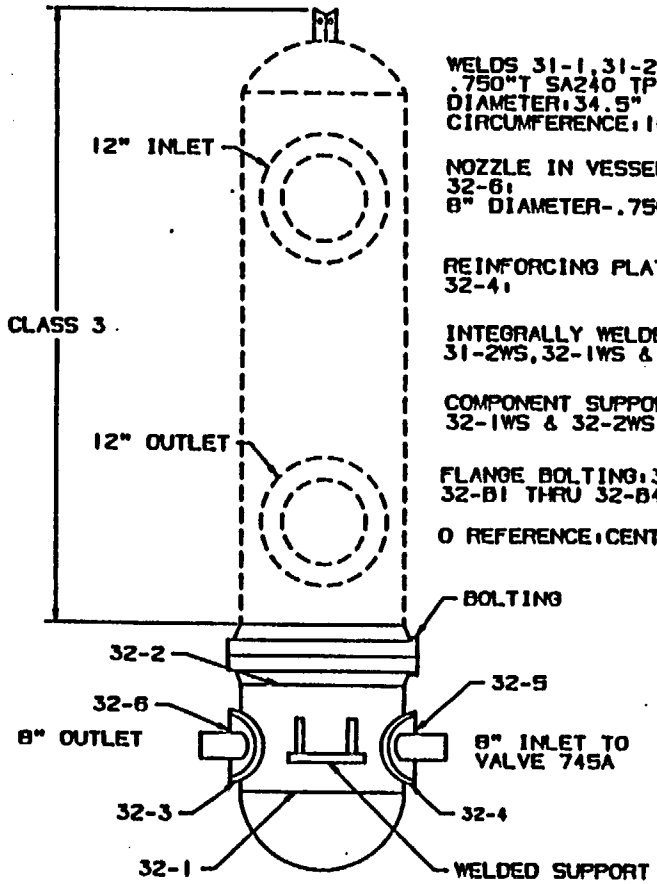

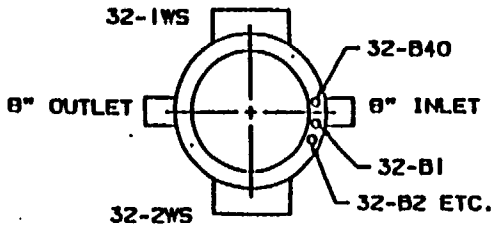

WELDS 31-1,31-2,32-1 & 32-2:
.750"T SA240 TP304 STAINLESS STEEL
DIAMETER:34.5"
CIRCUMFERENCE:108.33"

NOZZLE IN VESSEL WELDS 31-5,31-6,32-5 & 32-6:
8" DIAMETER-.750"T (NOT ACCESSIBLE)

REINFORCING PLATE WELDS 31-3,31-4,32-3 & 32-4:

INTEGRALLY WELDED ATTACHMENTS 31-1WS, 31-2WS,32-1WS & 32-2WS: 0.75"T

COMPONENT SUPPORTS:31-1WS,31-2WS, 32-1WS & 32-2WS

FLANGE BOLTING:31-B1 THRU 31-B40 & 32-B1 THRU 32-B40: 1.25" DIAMETER

0 REFERENCE:CENTERLINE OF 8" INLET NOZZLE

NEW YORK POWER AUTHORITY INDIAN POINT UNIT NO.3	
RESIDUAL HEAT EXCHANGER ACAHRS1-31 RESIDUAL HEAT EXCHANGER ACAHRS2-32	
INT-2-1120	REV. 4

NON REGENERATIVE LETDOWN HEAT EXCHANGER
CSAHNRT-31

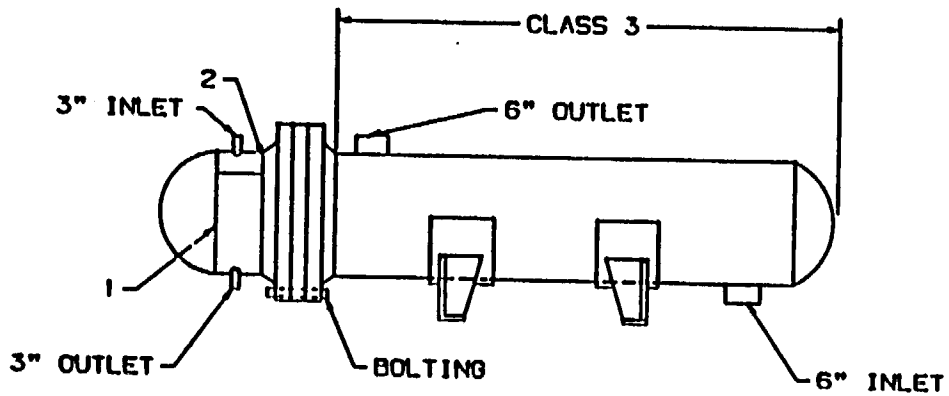

WELDS 1 & 2: 0.625"T SA240 TP304 STAINLESS STEEL
DIAMETER:22.0"; CIRCUMFERENCE: 69.08"
NOZZLE IN VESSEL WELDS: 3" DIAMETER
INTEGRALLY WELDED ATTACHMENTS: NOT APPLICABLE
COMPONENT SUPPORTS: NOT APPLICABLE
FLANGE BOLTING: 32-1.0" DIAMETER
0 REFERENCE: CENTERLINE OF 3" INLET NOZZLE

NEW YORK POWER AUTHORITY INDIAN POINT UNIT NO.3	
NON REGENERATIVE LETDOWN HEAT EXCHANGER CSAHNRT-31	
INT-2-1140	REV. 2

EXCESS LETDOWN HEAT EXCHANGER CSAHEL1-31

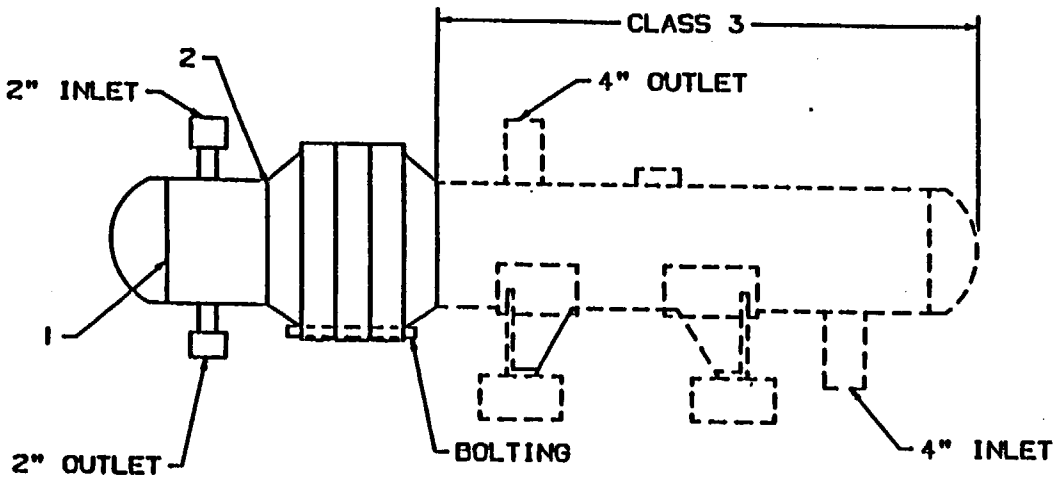

WELDS 1 & 2: 0.750"T SA240 TP304 STAINLESS STEEL
DIAMETER: 9.5"; CIRCUMFERENCE: 29.85"
NOZZLE IN VESSEL WELDS: 2" DIAMETER
INTEGRALLY WELDED ATTACHMENTS: NOT APPLICABLE
COMPONENT SUPPORTS: NOT APPLICABLE
FLANGE BOLTING: 12-1.625" DIAMETER
0 REFERENCE: CENTERLINE OF 2" INLET NOZZLE

NEW YORK POWER AUTHORITY INDIAN POINT UNIT NO.3	
EXCESS LETDOWN HEAT EXCHANGER CSAHEL1-31	
INT-2-1150	REV. 3

BORON INJECTION TANK
INTSIATSI

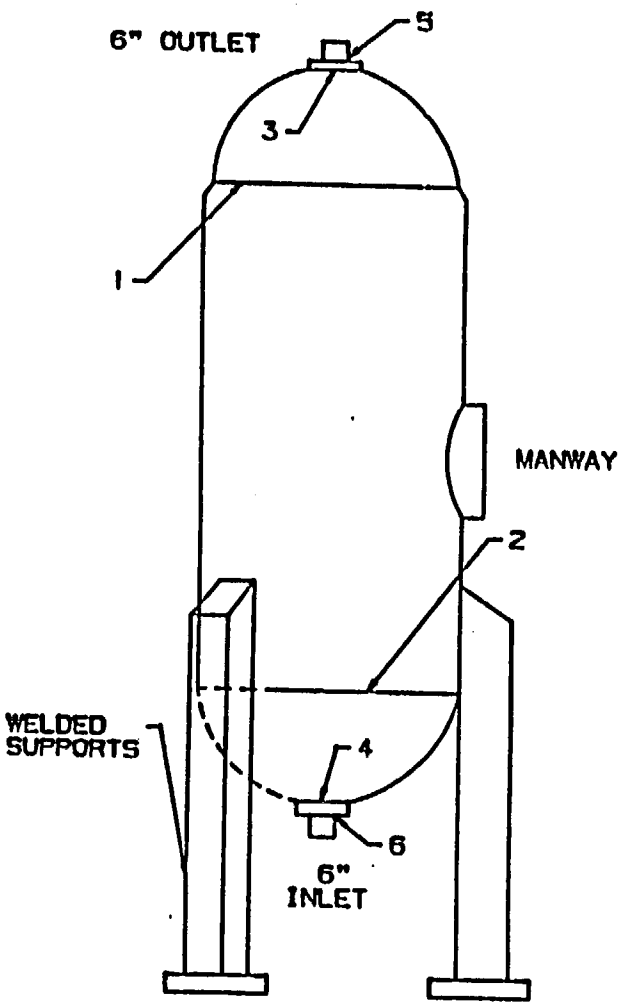

NOZZLE

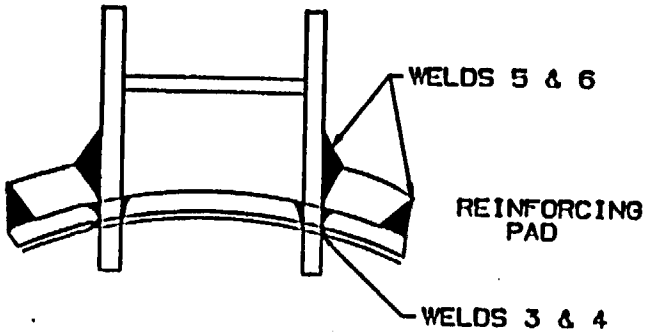

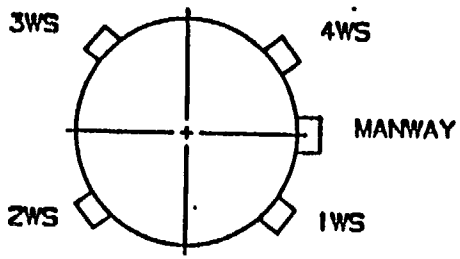

WELDS 1 & 2: HEAD 1.60"T;SHELL 2.6875"T SA516 GRADE 70 CARBON STEEL
WITH 5/32"T SA240 TP304 STAINLESS STEEL CLADDING
DIAMETER: 53.4";CIRCUMFERENCE: 167.60"
NOZZLE IN VESSEL WELDS 3 & 4: 6" DIAMETER 1.25"T MIN.
SA516 GRADE 70 CARBON STEEL WITH 5/32"T
SA240 TP304 STAINLESS STEEL CLADDING
(INACCESSIBLE DUE TO REINFORCING PAD)
REINFORCING PAD WELDS 5 & 6: 11.75" DIAMETER: 1.45"T
SA516 GRADE 70 CARBON STEEL
INTEGRALLY WELDED ATTACHMENTS: 4- 0.50"T
COMPONENT SUPPORTS: WELDED ATTACHMENTS-1WS,2WS,3WS & 4WS
MANWAY BOLTING: 20-1.5" DIAMETER
0 REFERENCE : CENTERLINE OF MANWAY

NEW YORK POWER AUTHORITY INDIAN POINT UNIT NO.3	
BORON INJECTION TANK INTSIATSI	
INT-2-1220	REV. 1

WELDS 31-1,31-2,32-1 & 32-1: 0.875"T TP304 STAINLESS STEEL
DIAMETER: 10.75"; CIRCUMFERENCE: 33.75"
NOZZLE IN VESSEL WELDS: 2" DIAMETER
INTEGRALLY WELDED ATTACHMENTS: 3-0.375"T
COMPONENT SUPPORTS: 3 WELDED ATTACHMENTS
BOLTING: 16-1.25": DIAMETER
0 REFERENCE: CENTERLINE OF 2" INLET NOZZLE

SEAL WATER INJECTION FILTER
CSFLS1-31

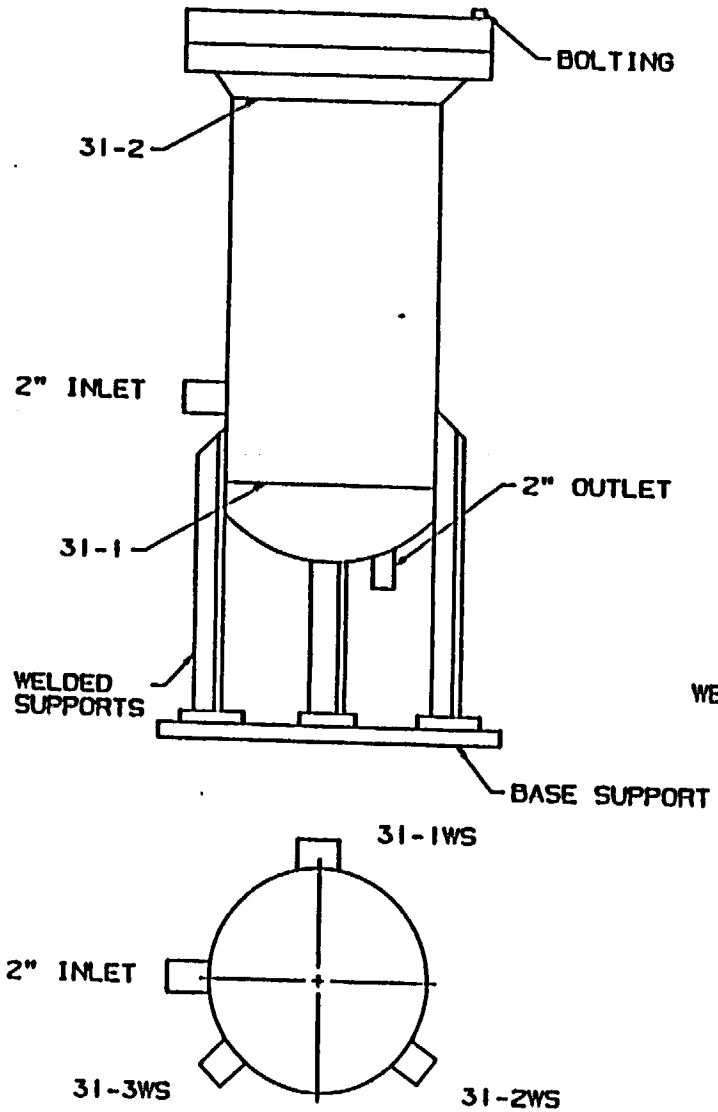

SEAL WATER INJECTION FILTER
CSFLS1-32

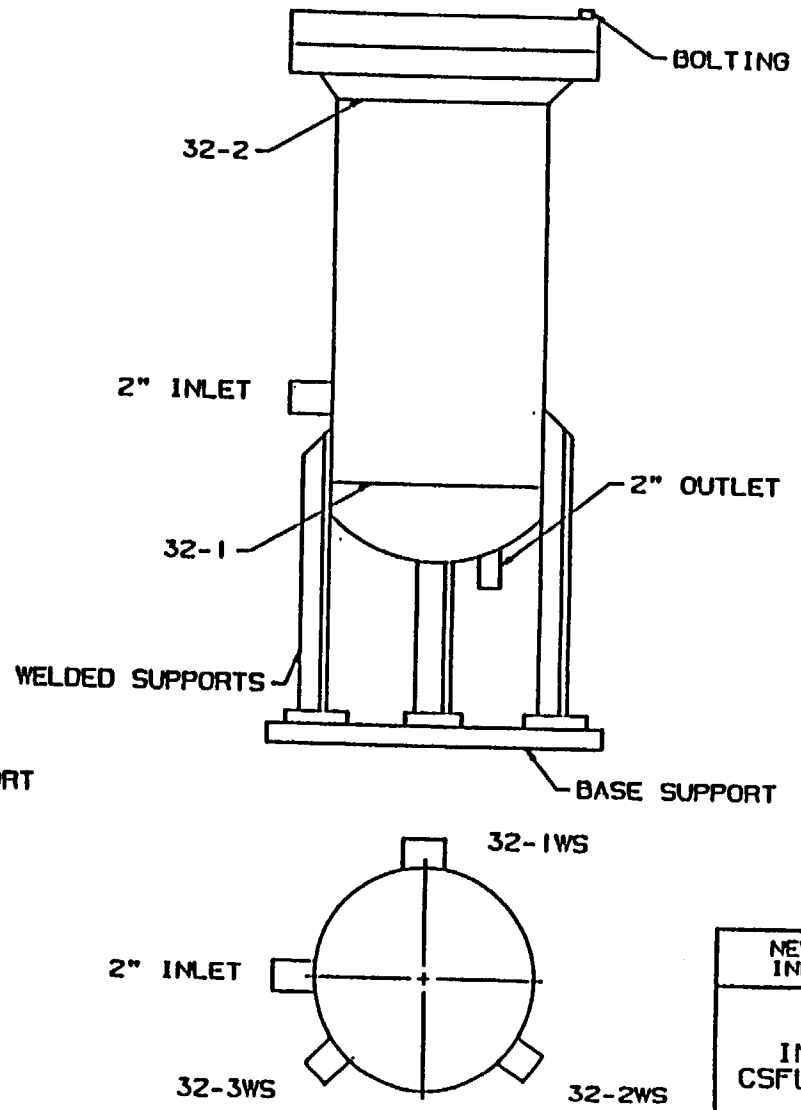

NEW YORK POWER AUTHORITY INDIAN POINT UNIT NO.3	
SEAL WATER INJECTION FILTERS CSFLS1-31 & CSFLS1-32	
INT-2-1300	REV. 3

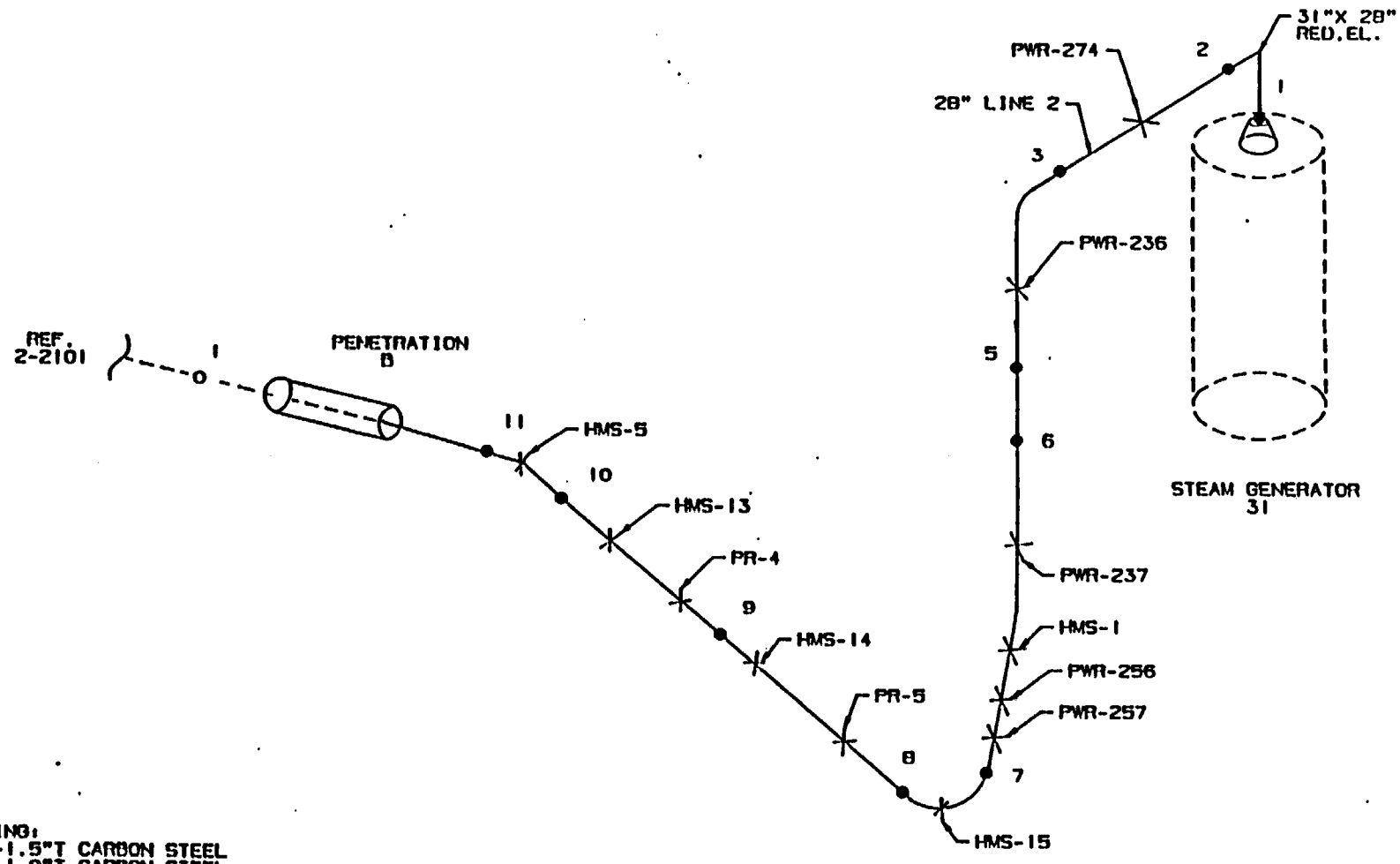

PIPING:
31"-1.5"T CARBON STEEL
28"-1.0"T CARBON STEEL

INTEGRALLY WELDED ATTACHMENTS:
HMS-1:1.25"T
PR-4:2.0"T
PR-5:2.0"T
HMS-5:1.0"T
HMS-13:1.0"T
HMS-14:1.0"T
HMS-15:1.0"T

NOTE:WELDS 1 & 5 REPLACED 1989.
WELD 4 DELETED 1989.

NEW YORK POWER AUTHORITY INDIAN POINT UNIT NO.3	
LOOP 31 31" & 28" LINE 2 MAINSTEAM	
INT-2-2100	REV. 4

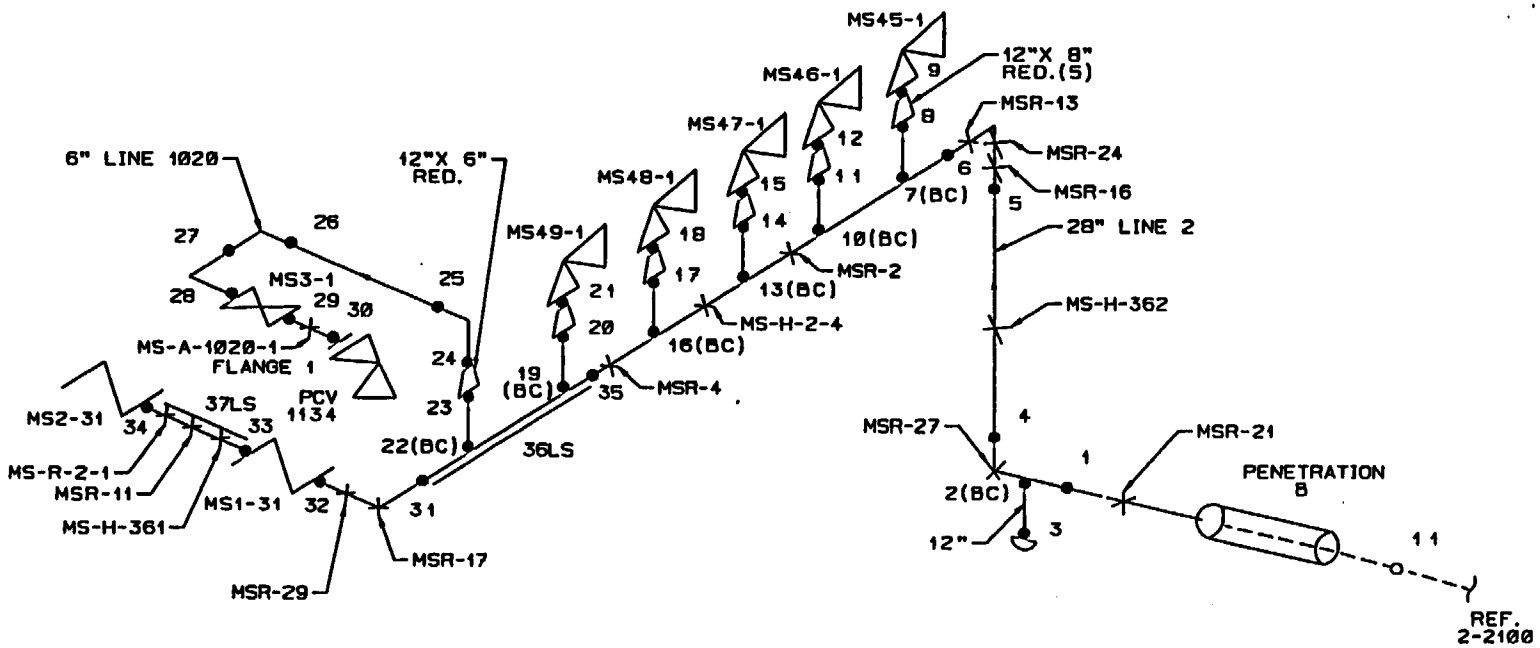

PIPING:
28"-1.0"T CARBON STEEL
12" SCH 80 0.688"T CARBON STEEL
8" SCH 160 0.906"T CARBON STEEL
6" SCH 80 0.432"T CARBON STEEL

FLANGE BOLTING:
FLANGE 1:12 STUDS & 24 NUTS-1.00" DIAMETER

VALVE BONNET BOLTING:
MS1-31:24 STUDS & 24 NUTS-1.750" DIAMETER
MS2-31:24 STUDS & 24 NUTS-1.750" DIAMETER
MS3-1: 8 STUDS & 8 NUTS-0.875" DIAMETER
MS45-1:6 STUDS & 6 NUTS-1.125" DIAMETER
MS46-1:6 STUDS & 6 NUTS-1.125" DIAMETER
MS47-1:6 STUDS & 6 NUTS-1.125" DIAMETER
MS48-1:6 STUDS & 6 NUTS-1.125" DIAMETER
MS49-1:6 STUDS & 6 NUTS-1.125" DIAMETER
PCV1134:8 STUDS & 8 NUTS-1.125" DIAMETER

INTEGRALLY WELDED ATTACHMENTS:
MSR-4:1.0"T
MSR-11:1.0"T
MSR-13:1.0"T
MSR-16:1.0"T
MSR-17:1.125"T
MSR-21:1.0"T
MSR-24:1.0"T
MSR-27:1.0"T
MSR-29:1.0"T
MS-A-1020-1:0.50"T FOR 6" PIPE AND 0.75"T FOR 28" PIPE
MS-H-362:1.0"T

VALVE MANUFACTURER:
MS1-31 & MS2-31:ATWOOD & MORRILL
MS3-1:CRANE
MS45-1,MS46-1,MS47-1,MS48-1 & MS49-1:CROSBY ASHTON
PCV1134:COPES VULCAN

NEW YORK POWER AUTHORITY INDIAN POINT UNIT NO.3	
LOOP 31 28",12" & 8" LINE 2 MAINSTEAM & 6" LINE 1020 MAINSTEAM	
INT-2-2101	REV. 5

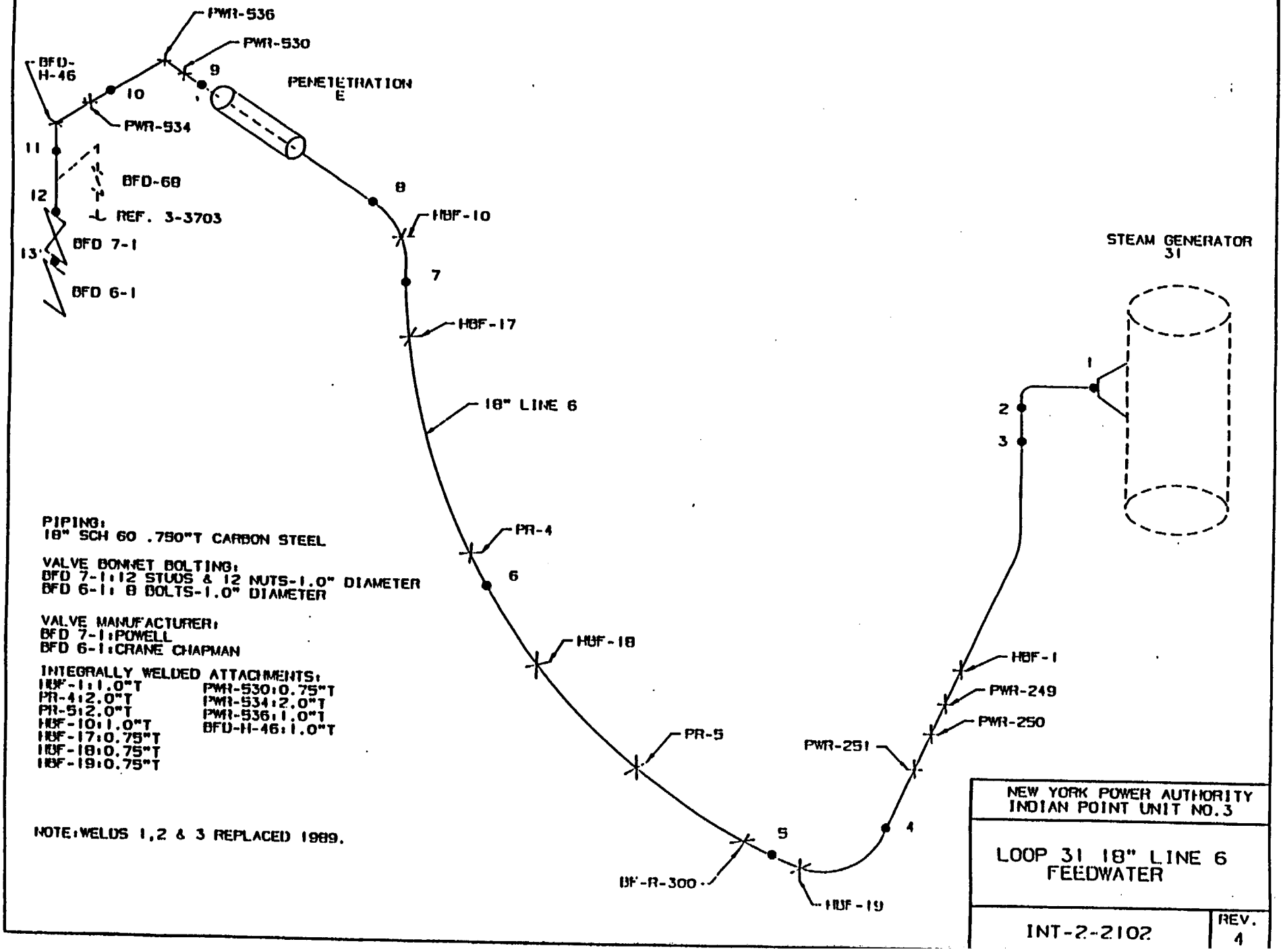
PWR-536
PWR-530
BFD-H-46
9
10
PENETETRATION E
PWR-534
11
1
BFD-68
12
REF. 3-3703
BFD 7-1
13
BFD 6-1
8
HBF-10
7
HBF-17
18" LINE 6
STEAM GENERATOR 31
1
2
3
PR-4
6
HBF-18
HBF-1
PWR-249
PWR-250
PWR-251
PR-5
5
4
BF-R-300
HBF-19
PIPING:
18" SCH 60 .750"T CARBON STEEL
VALVE BONNET BOLTING:
BFD 7-1:12 STUDS & 12 NUTS-1.0" DIAMETER
BFD 6-1: 8 BOLTS-1.0" DIAMETER
VALVE MANUFACTURER:
BFD 7-1:POWELL
BFD 6-1:CRANE CHAPMAN
INTEGRALLY WELDED ATTACHMENTS:
HBF-1:1.0"T
PR-4:2.0"T
PR-5:2.0"T
HBF-10:1.0"T
HBF-17:0.75"T
HBF-18:0.75"T
HBF-19:0.75"T
PWR-530:0.75"T
PWR-534:2.0"T
PWR-536:1.0"T
BFD-H-46:1.0"T
NOTE:WELDS 1,2 & 3 REPLACED 1989.
NEW YORK POWER AUTHORITY
INDIAN POINT UNIT NO.3
LOOP 31 18" LINE 6
FEEDWATER
INT-2-2102
REV.
4

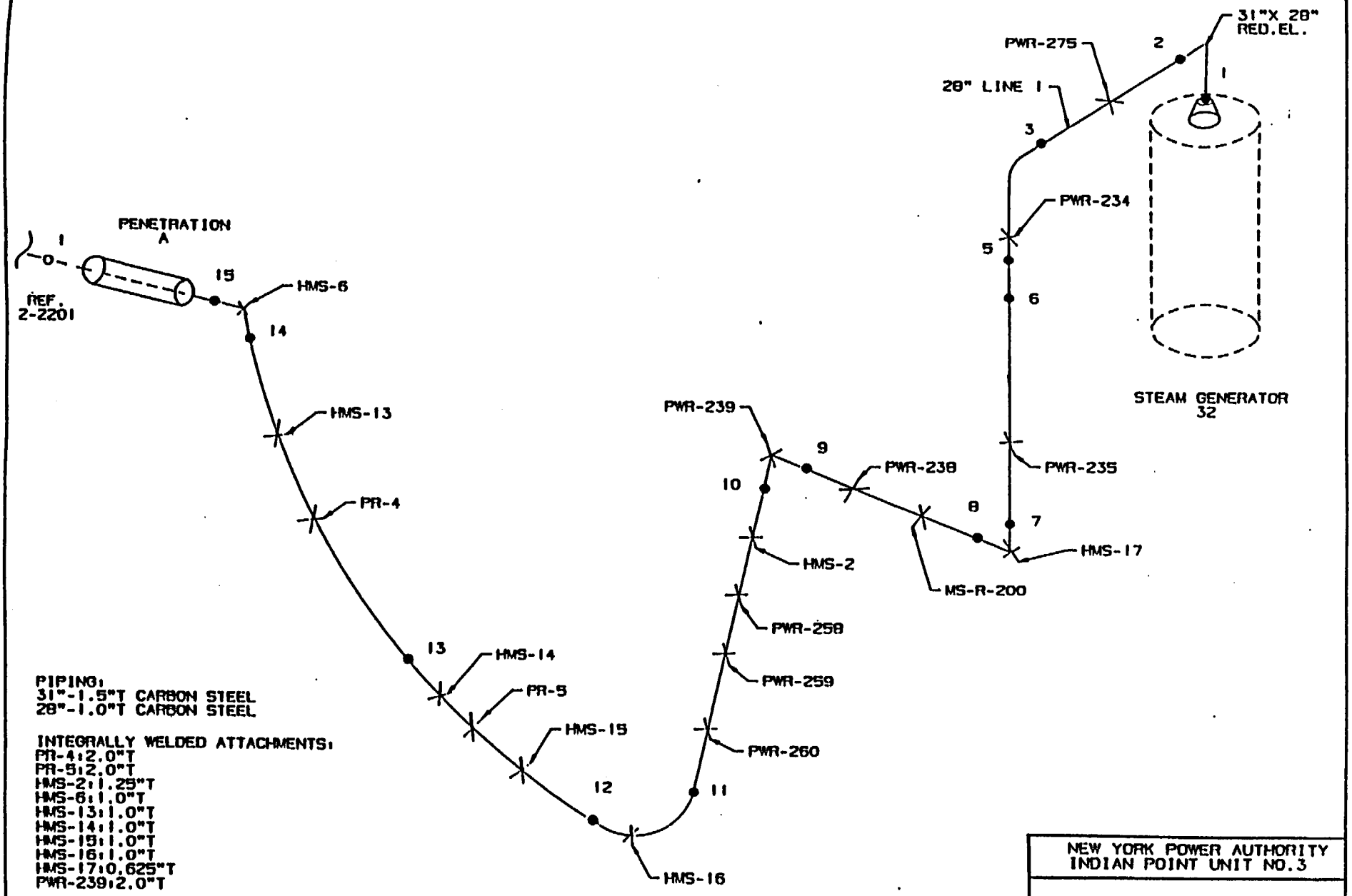

PIPING:
31"-1.5"T CARBON STEEL
28"-1.0"T CARBON STEEL

INTEGRALLY WELDED ATTACHMENTS:
PR-4:2.0"T
PR-5:2.0"T
HMS-2:1.25"T
HMS-6:1.0"T
HMS-13:1.0"T
HMS-14:1.0"T
HMS-15:1.0"T
HMS-16:1.0"T
HMS-17:0.625"T
PWR-239:2.0"T

NOTE:WELDS 1 & 5 REPLACED 1989.
WELD 4 DELETED 1989.

NEW YORK POWER AUTHORITY INDIAN POINT UNIT NO.3	
LOOP 32 31" & 28" LINE 1 MAINSTEAM	
INT-2-2200	REV. 4

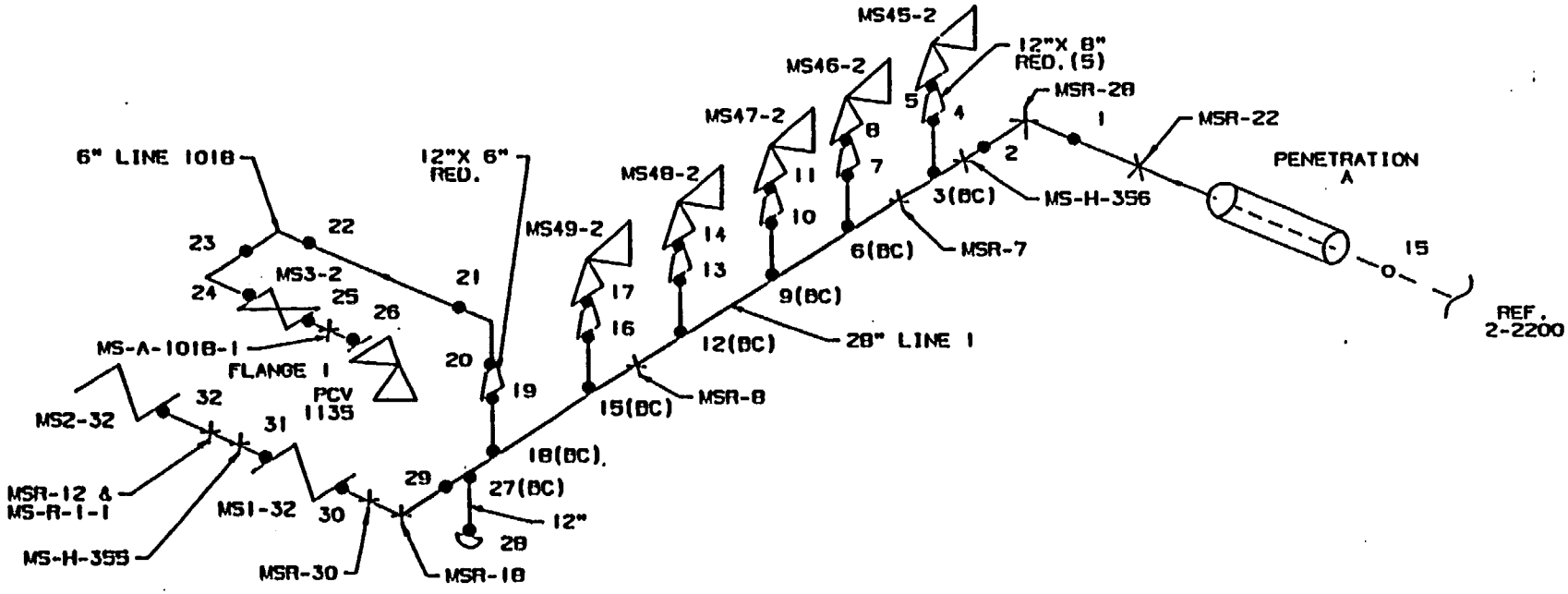

PIPING:
28"-1.0"T CARBON STEEL
12" SCH 80 0.688"T CARBON STEEL
8" SCH 160 0.906"T CARBON STEEL
6" SCH 80 0.432"T CARBON STEEL

VALVE BONNET BOLTING:
MS1-32:24 STUDS & 24 NUTS-1.750" DIAMETER
MS2-32:24 STUDS & 24 NUTS-1.750" DIAMETER
MS3-2: 8 STUDS & 8 NUTS-0.875" DIAMETER
MS45-2:6 STUDS & 6 NUTS-1.125" DIAMETER
MS46-2:6 STUDS & 6 NUTS-1.125" DIAMETER
MS47-2:6 STUDS & 6 NUTS-1.125" DIAMETER
MS48-2:6 STUDS & 6 NUTS-1.125" DIAMETER
MS49-2:6 STUDS & 6 NUTS-1.125" DIAMETER
PCV1135:8 STUDS & 8 NUTS-1.125" DIAMETER

VALVE MANUFACTURER:
MS1-32 & MS2-32:ATWOOD & MORRILL
MS3-2:CRANE
MS45-2,MS46-2,MS47-2,MS48-2 & MS49-2:CROSBY ASHTON
PCV1135:COPES VULCAN

FLANGE BOLTING:
FLANGE 1:12 STUDS & 24 NUTS-1.00" DIAMETER

INTEGRALLY WELDED ATTACHMENTS:
MSR-7:1.00"T
MSR-8:1.00"T
MSR-12:1.00"T
MSR-18:1.00"T
MSR-22:1.00"T
MSR-28:1.00"T
MSR-30:1.00"T
MS-A-1018-1:0.337"T

NEW YORK POWER AUTHORITY INDIAN POINT UNIT NO.3	
LOOP 32 28",12" & 8" LINE 1 MAINSTEAM & 6" LINE 1018 MAINSTEAM	
INT-2-2201	REV. 4

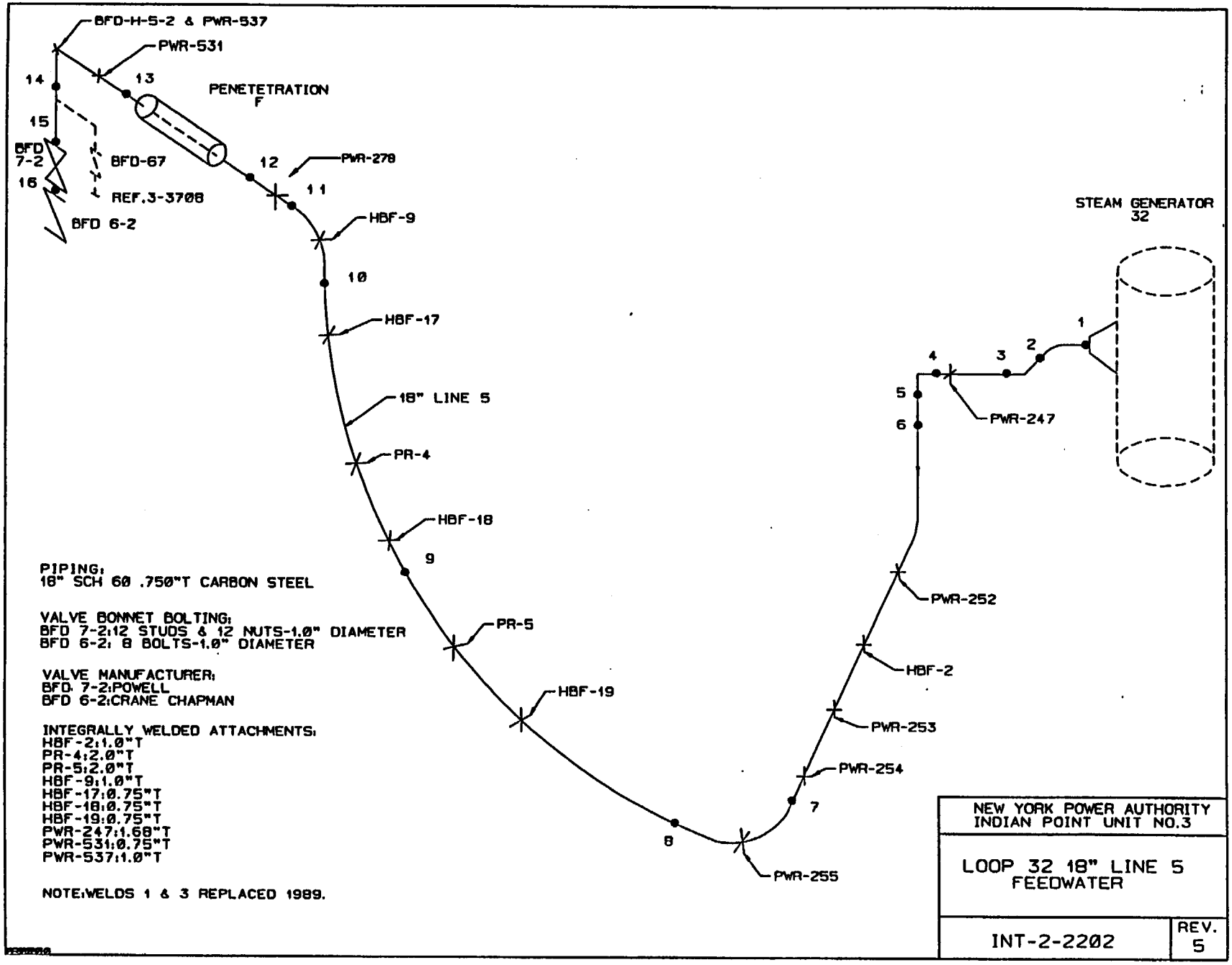
BFD-H-5-2 & PWR-537
PWR-531
14
13
PENETETRATION
F
15
BFD
7-2
BFD-67
12
PWR-278
16
REF.3-3708
11
BFD 6-2
HBF-9
10
HBF-17
18" LINE 5
PR-4
HBF-18
9
PR-5
HBF-19
8
PWR-255
7
PWR-254
PWR-253
HBF-2
PWR-252
6
5
PWR-247
4
3
2
1
STEAM GENERATOR
32
PIPING:
18" SCH 60 .750"T CARBON STEEL
VALVE BONNET BOLTING:
BFD 7-2:12 STUDS & 12 NUTS-1.0" DIAMETER
BFD 6-2: 8 BOLTS-1.0" DIAMETER
VALVE MANUFACTURER:
BFD 7-2:POWELL
BFD 6-2:CRANE CHAPMAN
INTEGRALLY WELDED ATTACHMENTS:
HBF-2:1.0"T
PR-4:2.0"T
PR-5:2.0"T
HBF-9:1.0"T
HBF-17:0.75"T
HBF-18:0.75"T
HBF-19:0.75"T
PWR-247:1.68"T
PWR-531:0.75"T
PWR-537:1.0"T
NOTE:WELDS 1 & 3 REPLACED 1989.
NEW YORK POWER AUTHORITY
INDIAN POINT UNIT NO.3
LOOP 32 18" LINE 5
FEEDWATER
INT-2-2202
REV.
5

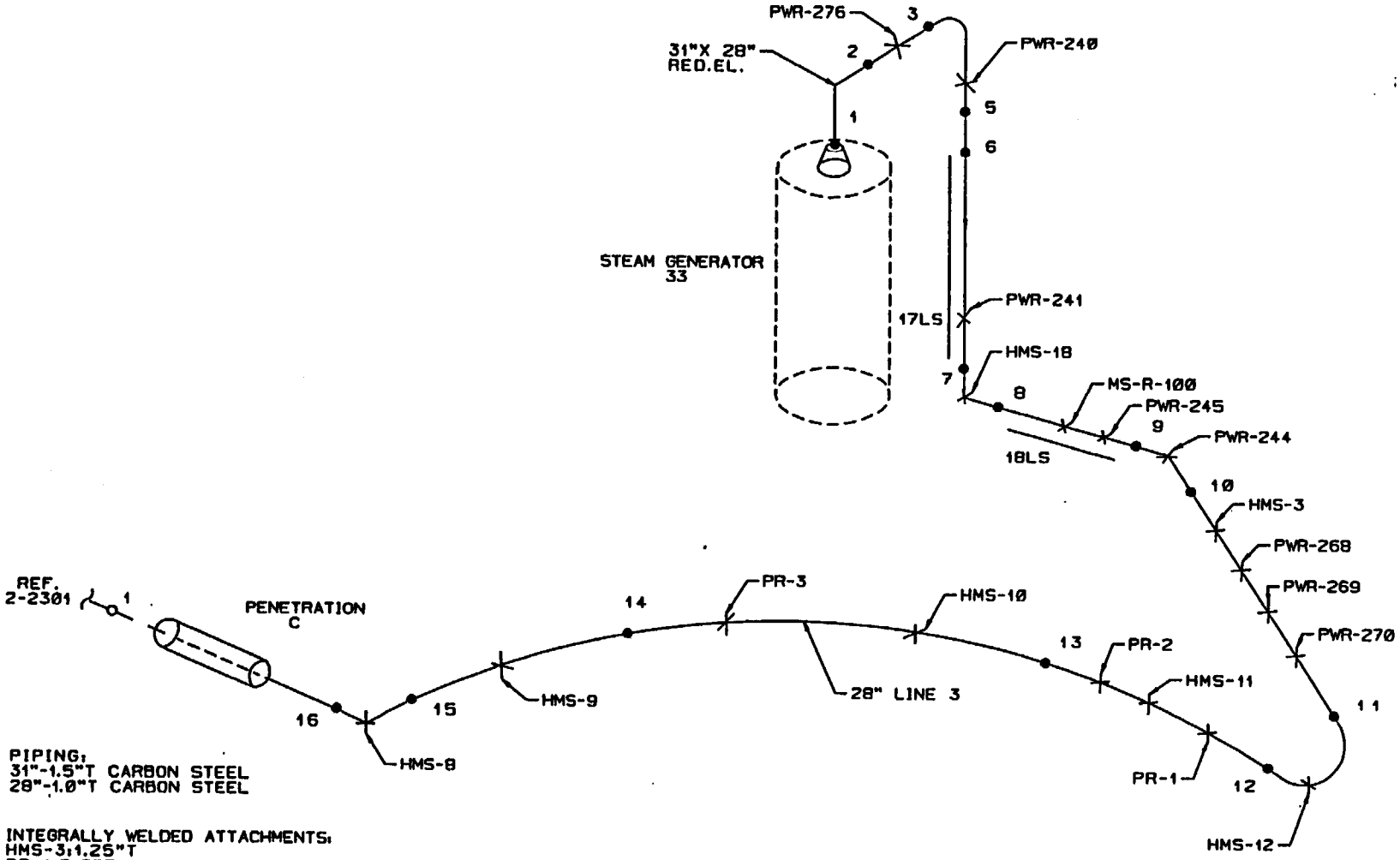

PIPING:
31"-1.5"T CARBON STEEL
28"-1.0"T CARBON STEEL

INTEGRALLY WELDED ATTACHMENTS:
HMS-3:1.25"T
PR-1:2.0"T
PR-2:2.0"T
PR-3:2.0"T
HMS-8:1.0"T
HMS-9:1.0"T
HMS-10:1.0"T
HMS-11:1.0"T
HMS-12:1.0"T
HMS-18:0.625"T
PWR-244:2.0"T

NOTE:WELDS 1 & 5 REPLACED 1989.
WELD 4 DELETED 1989.

NEW YORK POWER AUTHORITY INDIAN POINT UNIT NO.3	
LOOP 33 31" & 28" LINE 3 MAINSTEAM	
INT-2-2300	REV. 7

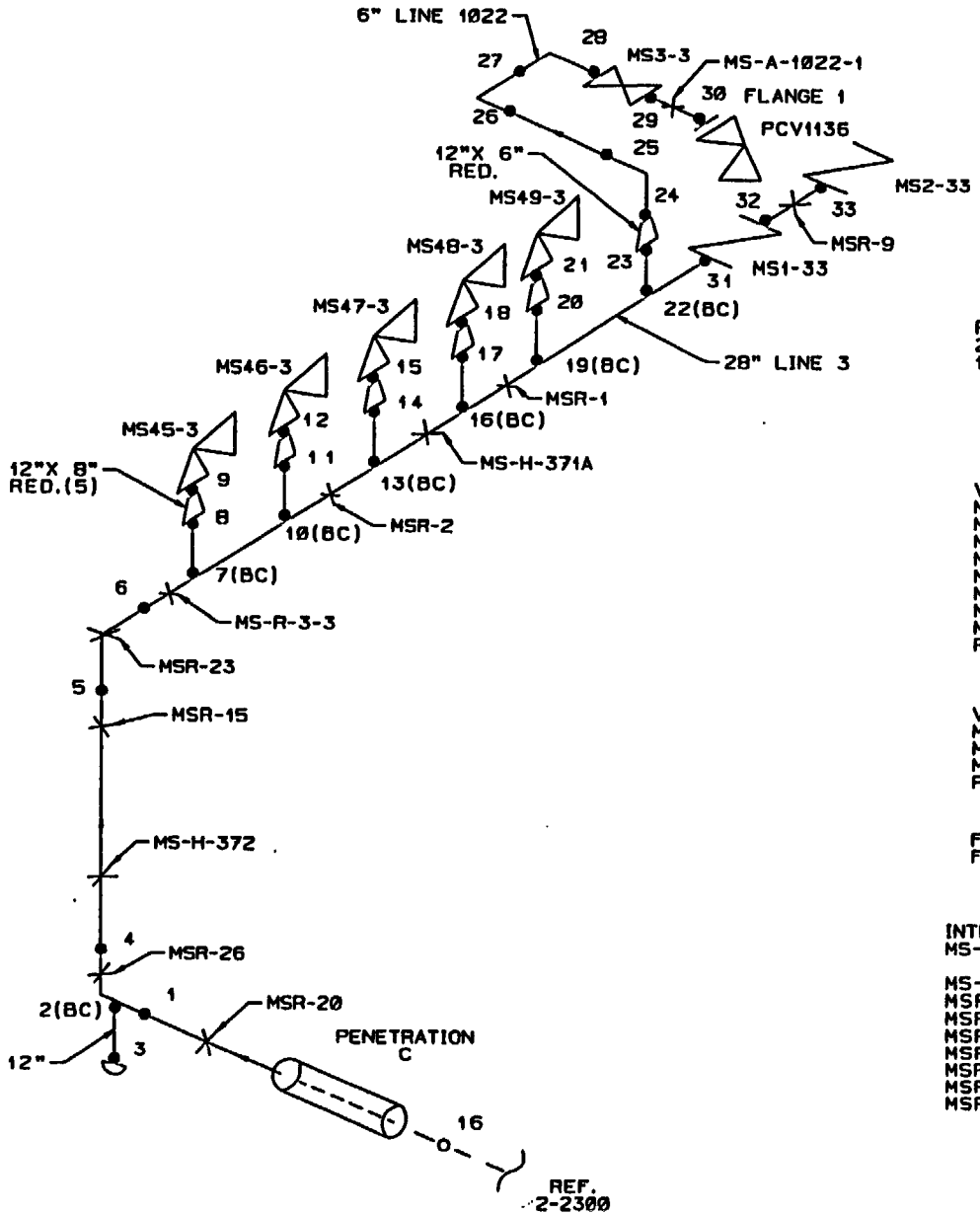

PIPING:
28"-1.0"T CARBON STEEL
12" SCH 80 0.688"T CARBON STEEL
8" SCH 160 0.906"T CARBON STEEL
6" SCH 80 0.432"T CARBON STEEL

VALVE BONNET BOLTING:
MS1-33:24 STUDS & 24 NUTS-1.750" DIAMETER
MS2-33:24 STUDS & 24 NUTS-1.750" DIAMETER
MS3-3: 8 STUDS & 8 NUTS-0.875" DIAMETER
MS45-3:6 STUDS & 6 NUTS-1.125" DIAMETER
MS46-3:6 STUDS & 6 NUTS-1.125" DIAMETER
MS47-3:6 STUDS & 6 NUTS-1.125" DIAMETER
MS48-3:6 STUDS & 6 NUTS-1.125" DIAMETER
MS49-3:6 STUDS & 6 NUTS-1.125" DIAMETER
PCV1136:8 STUDS & 8 NUTS-1.125" DIAMETER

VALVE MANUFACTURER:
MS1-33 & MS2-33:ATWOOD & MORRILL
MS3-3:CRANE
MS45-3,MS46-3,MS47-3,MS48-3 & MS49-3:CROSBY ASHTON
PCV1136:COPES VULCAN

FLANGE BOLTING:
FLANGE 1:12 STUDS & 24 NUTS-1.00" DIAMETER

INTEGRALLY WELDED ATTACHMENTS:
MS-A-1022-1:0.50"T FOR 6" PIPE AND
0.75"T FOR 28" PIPE
MS-H-372:1.0"T
MSR-1:1.0"T
MSR-2:1.0"T
MSR-9:1.0"T
MSR-15:1.125"T
MSR-20:2.0"T
MSR-23:1.0"T
MSR-26:1.0"T

NEW YORK POWER AUTHORITY
INDIAN POINT UNIT NO.3

LOOP 33
28",12" & 8"
LINE 3 MAINSTEAM &
6" LINE 1022 MAINSTEAM

INT-2-2301

REV.
5

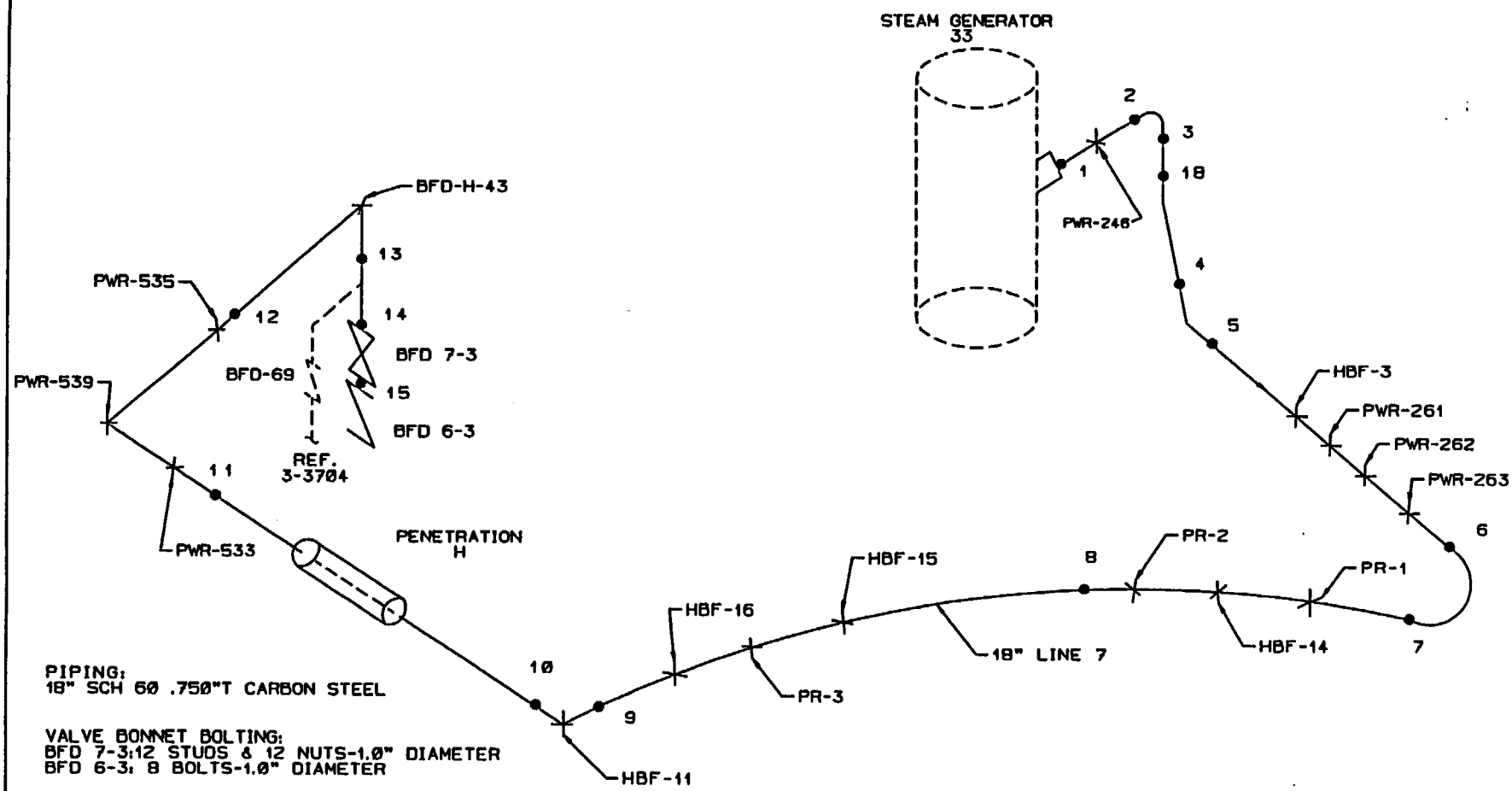

PIPING:
18" SCH 60 .750"T CARBON STEEL

VALVE BONNET BOLTING:
BFD 7-3:12 STUDS & 12 NUTS-1.0" DIAMETER
BFD 6-3: 8 BOLTS-1.0" DIAMETER

VALVE MANUFACTURER:
BFD 7-3:POWELL
BFD 6-3:CRANE CHAPMAN

INTEGRALLY WELDED ATTACHMENTS:
HBF-3:1.0"T
PR-1:2.0"T
PR-2:2.0"T
PR-3:2.0"T
HBF-11:1.0"T
HBF-14:0.75"T
HBF-15:0.75"T
HBF-16:0.75"T
PWR-533:0.75"T
PWR-535:2.00"T
PWR-539:1.0"T
BFD-H-43:1.0"T
PWR-246:1.50"T

NOTE:WELDS 1,2,3 & 18 REPLACED OR ADDED 1989.

NEW YORK POWER AUTHORITY INDIAN POINT UNIT NO.3	
LOOP 33 18" LINE 7 FEEDWATER	
INT-2-2302	REV. 5

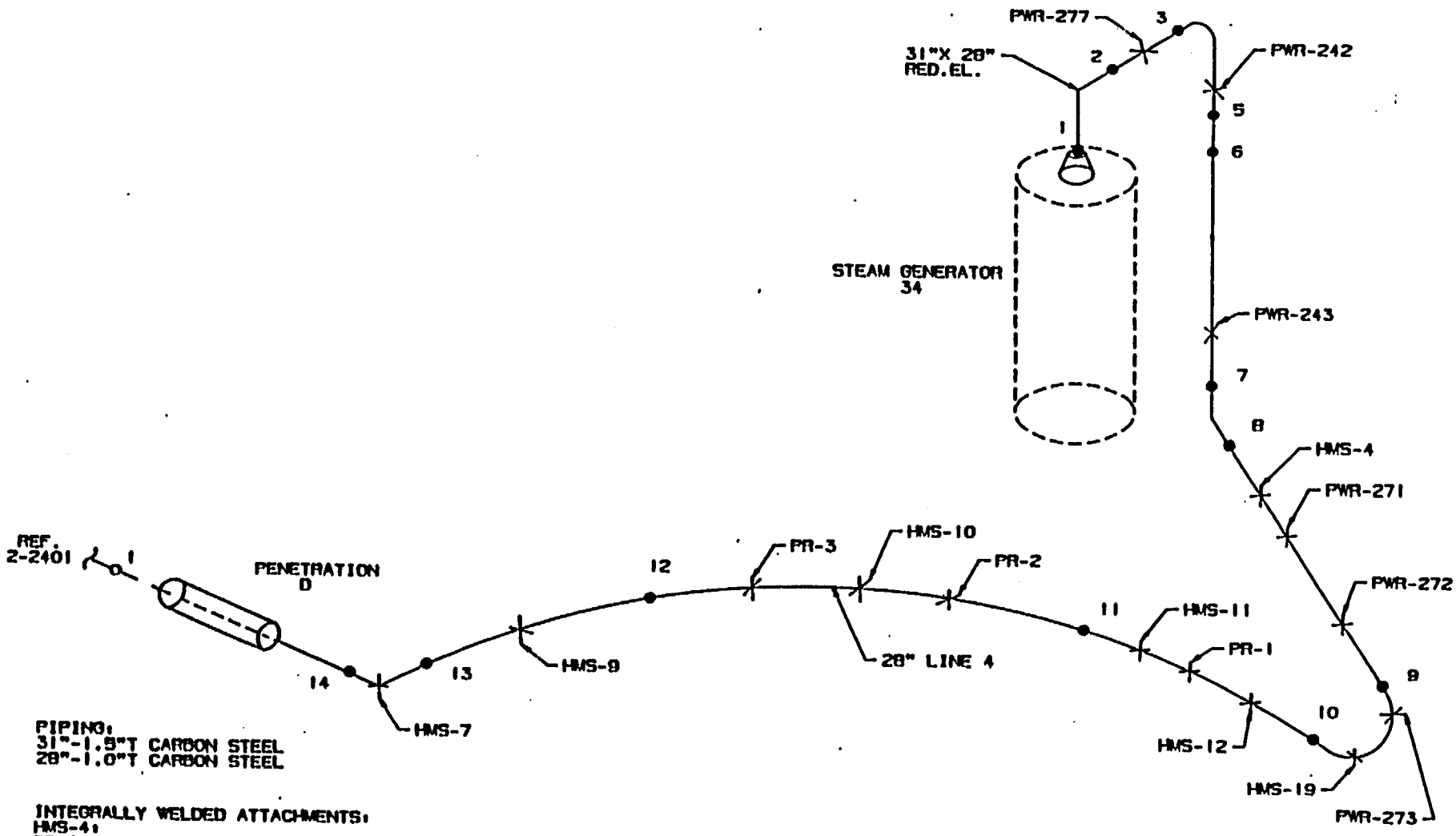

PIPING:
31"-1.5"T CARBON STEEL
28"-1.0"T CARBON STEEL

INTEGRALLY WELDED ATTACHMENTS:
HMS-4:
PR-1:2.0"T
PR-2:2.0"T
PR-3:2.0"T
HMS-7:1.0"T
HMS-9:1.0"T
HMS-10:1.0"T
HMS-11:1.0"T
HMS-12:1.0"T
HMS-19:1.0"T

NOTE: WELDS 1 & 5 REPLACED 1989.
WELD 4 DELETED 1989.

NEW YORK POWER AUTHORITY INDIAN POINT UNIT NO.3	
LOOP 34 31" & 28" LINE 4 MAINSTEAM	
INT-2-2400	REV. 3

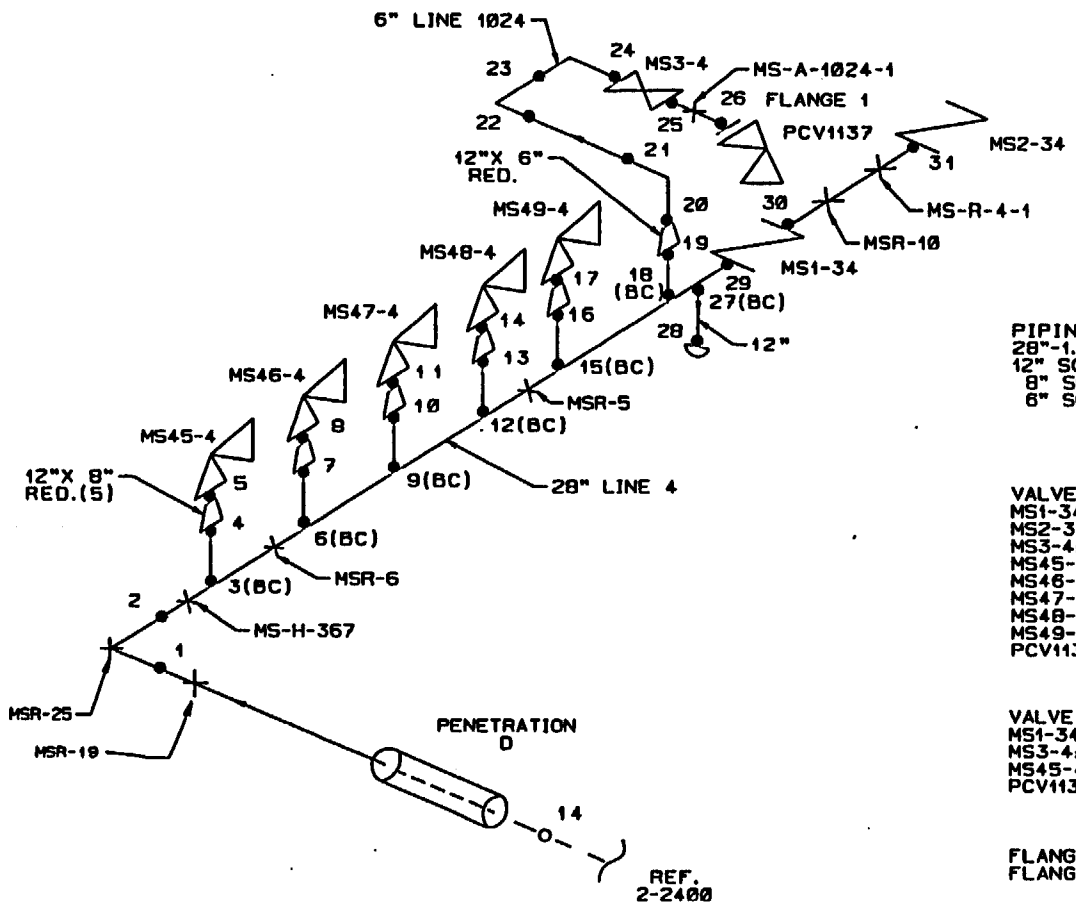

PIPING:
28"-1.0"T CARBON STEEL
12" SCH 80 0.688"T CARBON STEEL
8" SCH 160 0.906"T CARBON STEEL
6" SCH 80 0.432"T CARBON STEEL

VALVE BONNET BOLTING:
MS1-34:24 STUDS & 24 NUTS-1.750" DIAMETER
MS2-34:24 STUDS & 24 NUTS-1.750" DIAMETER
MS3-4: 8 STUDS & 8 NUTS-0.875" DIAMETER
MS45-4:6 STUDS & 6 NUTS-1.125" DIAMETER
MS46-4:6 STUDS & 6 NUTS-1.125" DIAMETER
MS47-4:6 STUDS & 6 NUTS-1.125" DIAMETER
MS48-4:6 STUDS & 6 NUTS-1.125" DIAMETER
MS49-4:6 STUDS & 6 NUTS-1.125" DIAMETER
PCV1137:8 STUDS & 8 NUTS-1.125" DIAMETER

VALVE MANUFACTURER:
MS1-34 & MS2-34:ATWOOD & MORRILL
MS3-4:CRANE
MS45-4,MS46-4,MS47-4,MS48-4 & MS49-4:CROSBY ASHTON
PCV1137:COPES VULCAN

FLANGE BOLTING:
FLANGE 1:12 STUDS & 24 NUTS-1.00" DIAMETER

INTEGRALLY WELDED ATTACHMENTS:
MS-A-1024-1:0.50"T FOR 6" PIPE AND
0.75"T FOR 28" PIPE
MSR-5:1.0"T
MSR-6:1.0"T
MSR-10:1.0"T
MSR-19:2.0"T
MSR-25:1.0"T

NEW YORK POWER AUTHORITY INDIAN POINT UNIT NO.3	
LOOP 34 28",12" & 8" LINE 4 MAINSTEAM & 6" LINE 1024 MAINSTEAM	
INT-2-2401	REV. 5

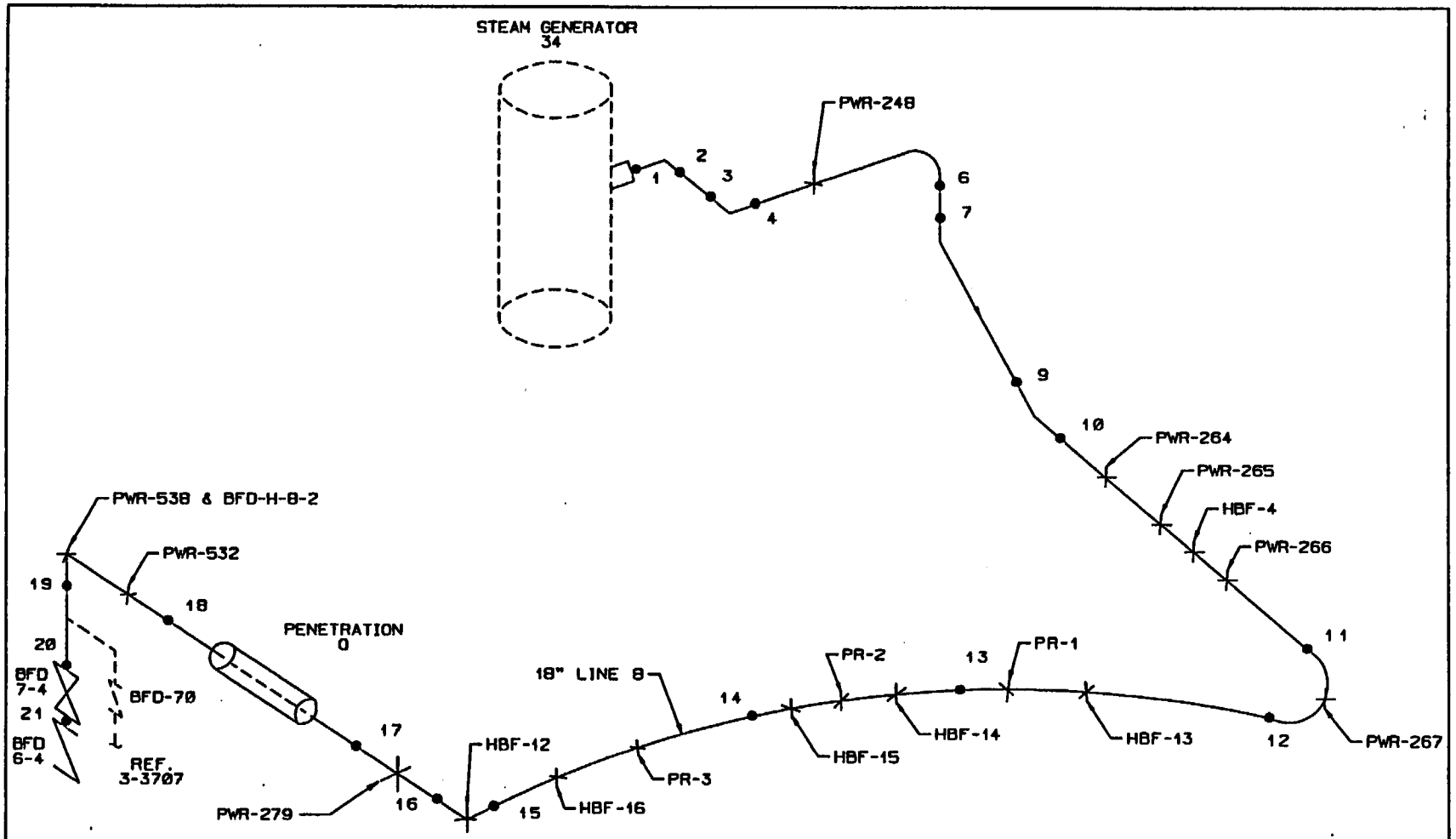

VALVE BONNET BOLTING:
BFD 7-4:12 STUDS & 12 NUTS-1.0" DIAMETER
BFD 6-4: 8 BOLTS-1.0" DIAMETER

VALVE MANUFACTURER:
BFD 7-4:POWELL
BFD 6-4:CRANE CHAPMAN

PIPING:
18" SCH 60 .750"T CARBON STEEL

INTEGRALLY WELDED ATTACHMENTS:
HBF-4:1.0"T
PR-1:2.0"T
PR-2:2.0"T
PR-3:2.0"T
HBF-12:1.0"T
HBF-13:0.75"T
HBF-14:0.75"T
HBF-15:0.75"T
HBF-16:0.75"T
PWR-265:1.0"T
PWR-532:0.75"T
PWR-538:1.0"T
PWR-248:1.5"T

NOTE:WELDS 1,2,3 AND 4 REPLACED 1989.
WELDS 5 & 8 DELETED 1989.

NEW YORK POWER AUTHORITY
INDIAN POINT UNIT NO.3

LOOP 34 18" LINE 8
FEEDWATER

INT-2-2402

REV.
5

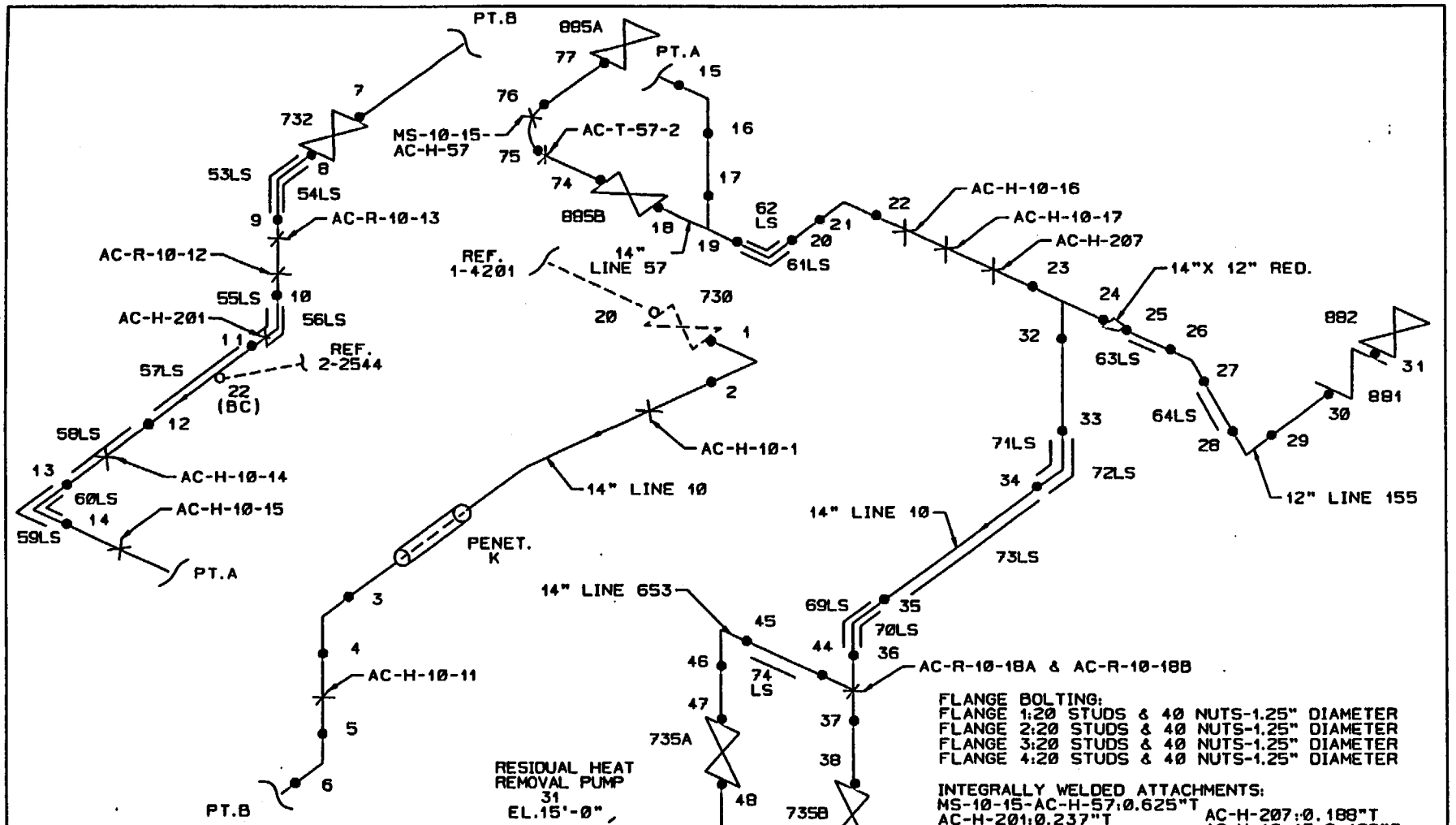

FLANGE BOLTING:
FLANGE 1:20 STUDS & 40 NUTS-1.25" DIAMETER
FLANGE 2:20 STUDS & 40 NUTS-1.25" DIAMETER
FLANGE 3:20 STUDS & 40 NUTS-1.25" DIAMETER
FLANGE 4:20 STUDS & 40 NUTS-1.25" DIAMETER

INTEGRALLY WELDED ATTACHMENTS:
MS-10-15-AC-H-57:0.625"T
AC-H-201:0.237"T
AC-H-10-14:0.188"T
AC-H-10-15:0.237"T
AC-H-653-1A:0.237"T
AC-H-10-18C:0.237"T
AC-H-207:0.188"T
AC-H-10-17:0.188"T

PIPING:
14" SCH 40 .438"T STAINLESS STEEL
12" SCH 40S .375"T STAINLESS STEEL

VALVE BONNET BOLTING:
732:
885A:20 STUDS & 20 NUTS-0.875" DIAMETER
885B:20 STUDS & 20 NUTS-0.875" DIAMETER
882:18 STUDS & 18 NUTS-0.875" DIAMETER
881:20 STUDS & 20 NUTS-0.875" DIAMETER
735A:18 STUDS & 18 NUTS-0.875" DIAMETER
735B:18 STUDS & 18 NUTS-0.875" DIAMETER

VALVE MANUFACTURER:
732:DARLING
885A:DARLING
885B:DARLING
882:DARLING
881:ALOYCO
735A:ALOYCO
735B:ALOYCO

NEW YORK POWER AUTHORITY
INDIAN POINT UNIT NO.3

14" LINE 10 RHR,
14" LINE 57 RHR,
14" LINE 653 RHR &
12" LINE 155 RHR

INT-2-2500

REV. 8

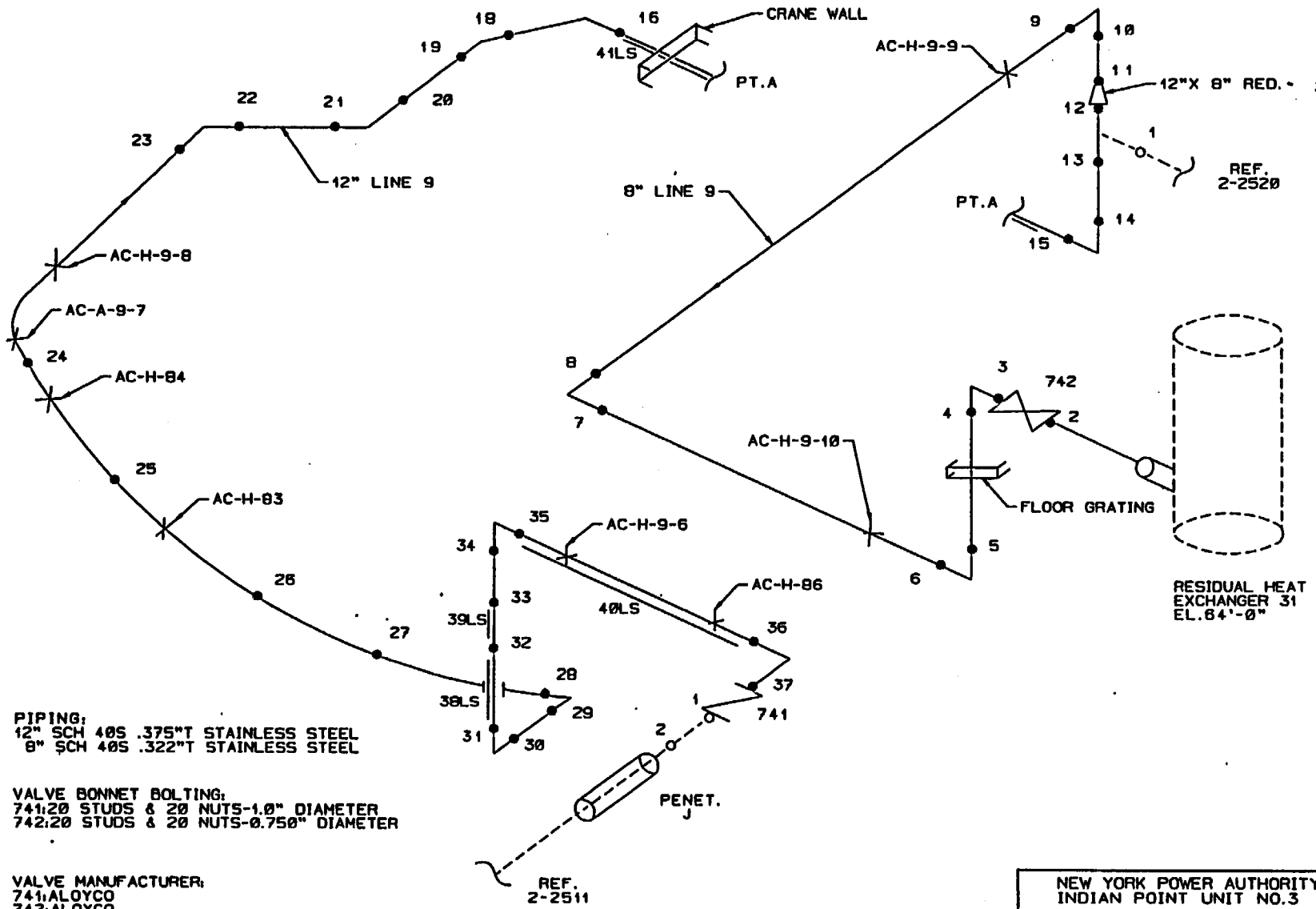

PIPING:
12" SCH 40S .375"T STAINLESS STEEL
8" SCH 40S .322"T STAINLESS STEEL

VALVE BONNET BOLTING:
741:20 STUDS & 20 NUTS-1.0" DIAMETER
742:20 STUDS & 20 NUTS-0.750" DIAMETER

VALVE MANUFACTURER:
741:ALOYCO
742:ALOYCO

INTEGRALLY WELDED ATTACHMENTS:
AC-H-83:0.50"T
AC-H-84:0.50"T
AC-H-86:0.50"T
AC-H-9-6:0.216"T
AC-H-9-7:0.50"T

NEW YORK POWER AUTHORITY
INDIAN POINT UNIT NO.3

12" LINE 9 RHR
&
8" LINE 9 RHR

INT-2-2510

REV. 5

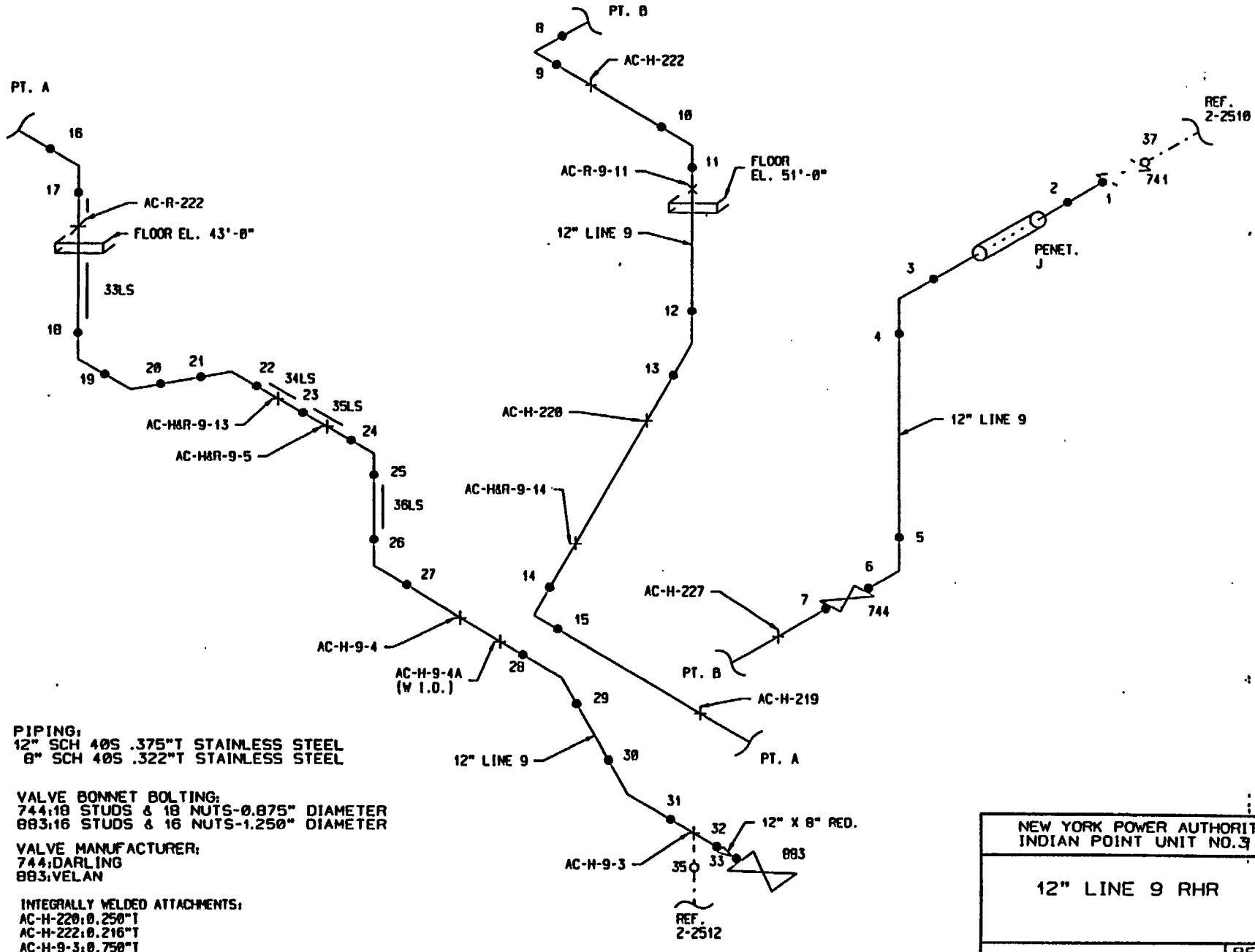

PIPING:
12" SCH 40S .375"T STAINLESS STEEL
8" SCH 40S .322"T STAINLESS STEEL

VALVE BONNET BOLTING:
744:18 STUDS & 18 NUTS-0.875" DIAMETER
883:16 STUDS & 16 NUTS-1.250" DIAMETER

VALVE MANUFACTURER:
744:DARLING
883:VELAN

INTEGRALLY WELDED ATTACHMENTS:
AC-H-220:0.250"T
AC-H-222:0.216"T
AC-H-9-3:0.750"T
AC-H-9-12:0.750"T

NEW YORK POWER AUTHORITY
INDIAN POINT UNIT NO.3

12" LINE 9 RHR

INT-2-2511

REV. 5

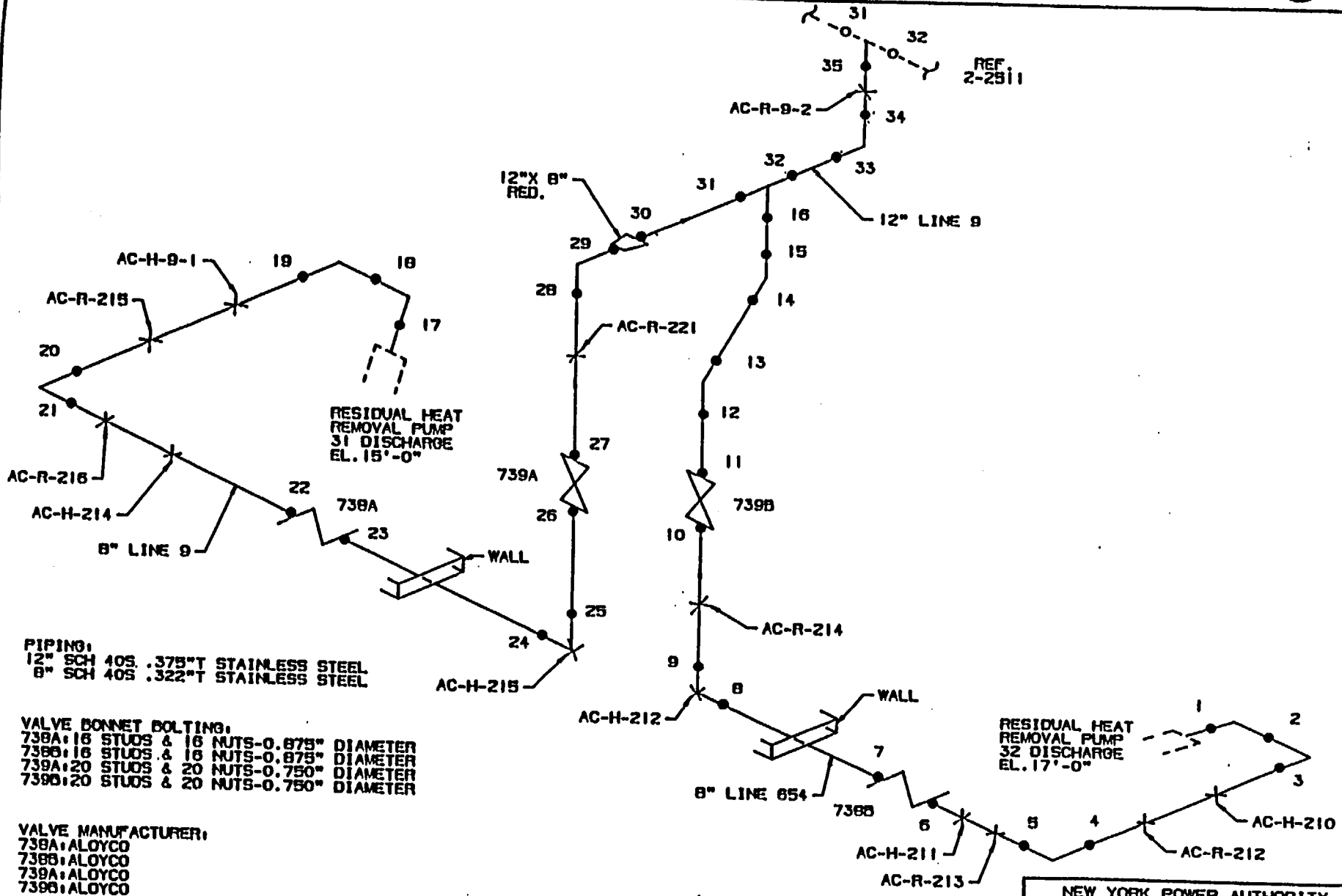

PIPING:
12" SCH 40S .375"T STAINLESS STEEL
8" SCH 40S .322"T STAINLESS STEEL

VALVE BONNET BOLTING:
738A:16 STUDS & 16 NUTS-0.875" DIAMETER
738B:16 STUDS & 16 NUTS-0.875" DIAMETER
739A:20 STUDS & 20 NUTS-0.750" DIAMETER
739B:20 STUDS & 20 NUTS-0.750" DIAMETER

VALVE MANUFACTURER:
738A:ALOYCO
738B:ALOYCO
739A:ALOYCO
739B:ALOYCO

INTEGRALLY WELDED ATTACHMENTS:
AC-H-9-1:0.203"T
AC-H-210:0.203"T
AC-H-211:0.203"T
AC-H-212:0.203"T
AC-H-214:0.203"T
AC-H-215:0.203"T

NEW YORK POWER AUTHORITY
INDIAN POINT UNIT NO.3

12" LINE 9 RHR,
8" LINE 9 RHR &
8" LINE 654 RHR

INT-2-2512

REV. 5

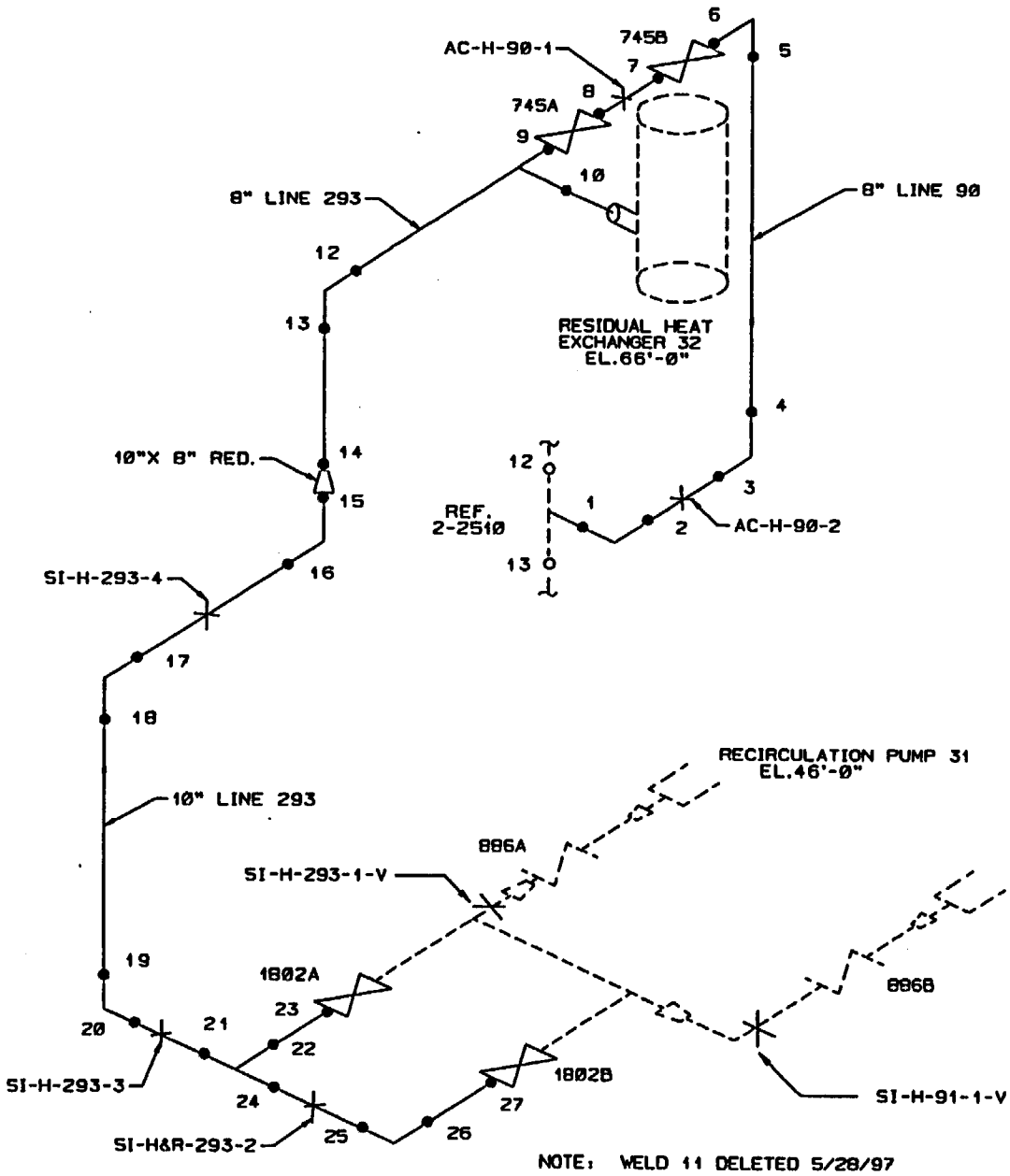

PIPING:
10" SCH 40S .365"T STAINLESS STEEL
8" SCH 40S .322"T STAINLESS STEEL

VALVE BONNET BOLTING:
745A: 20 STUDS & 20 NUTS-0.750" DIAMETER
745B: 20 STUDS & 20 NUTS-0.750" DIAMETER
1802A:18 STUDS & 18 NUTS-0.750" DIAMETER
1802B:18 STUDS & 18 NUTS-0.750" DIAMETER

VALVE MANUFACTURER:
745A:ALOYCO
745B:ALOYCO
1802A:DARLING
1802B:DARLING

NOTE: WELD 11 DELETED 5/28/97

NEW YORK POWER AUTHORITY INDIAN POINT UNIT NO.3	
10" LINE 293 RHR, 8" LINE 293 RHR & 8" LINE 90 RHR	
INT-2-2520	REV. 3

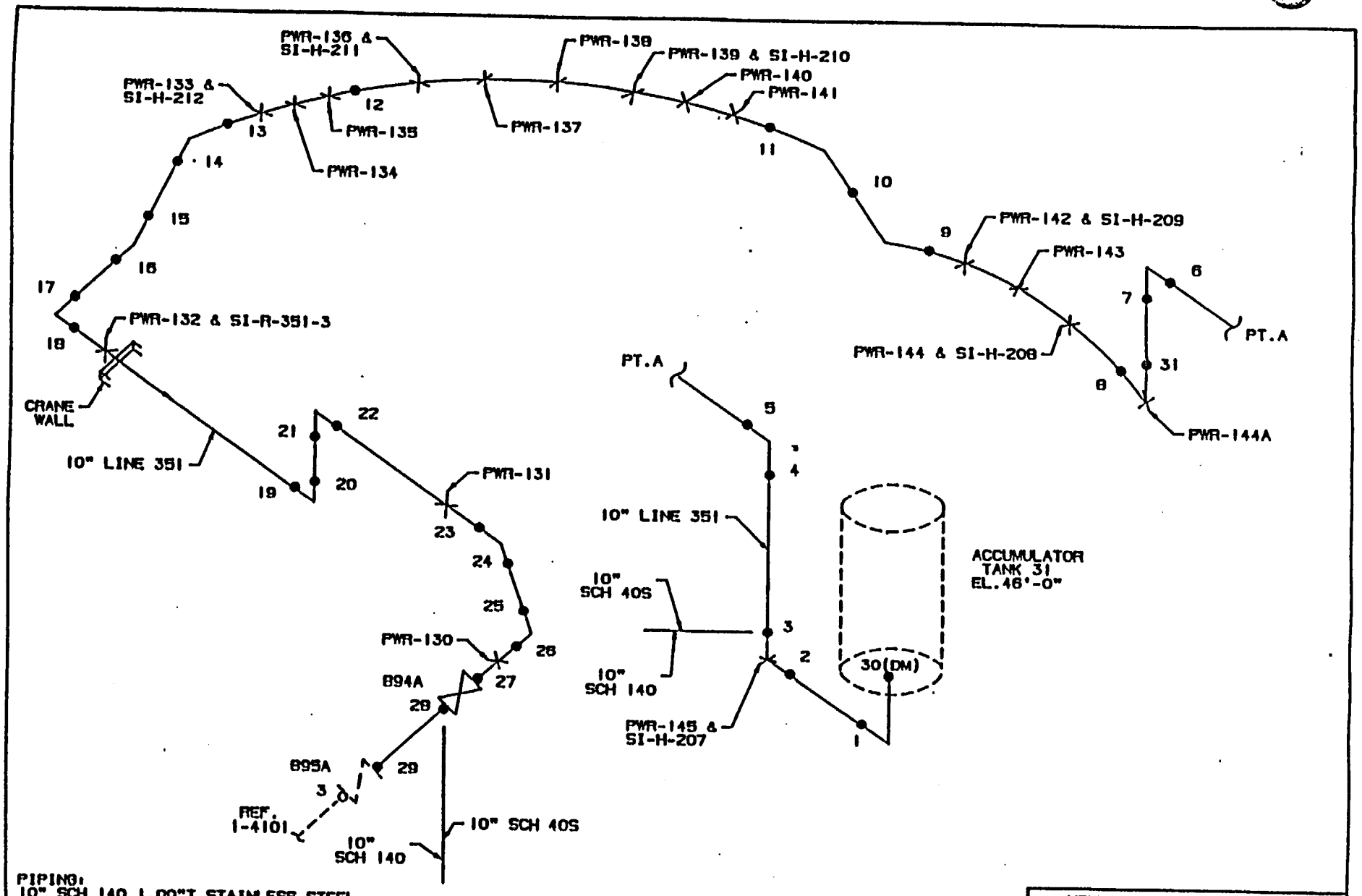

PIPING:
10" SCH 140 1.00"T STAINLESS STEEL
10" SCH 40S .365"T STAINLESS STEEL

VALVE BONNET BOLTING:
894A:10 STUDS & 10 NUTS-1.875" DIAMETER

VALVE MANUFACTURER:
894A:DARLING

INTEGRALLY WELDED ATTACHMENTS:
SI-H-207:0.216"T
PWR-133:0.50"T
PWR-139:0.50"T
PWR-142:0.50"T
PWR-144:0.50"T
PWR-144A:1.0"T

NEW YORK POWER AUTHORITY
INDIAN POINT UNIT NO.3

ACCUMULATOR DISCHARGE
10" LINE 351

INT-2-2521

REV. 4

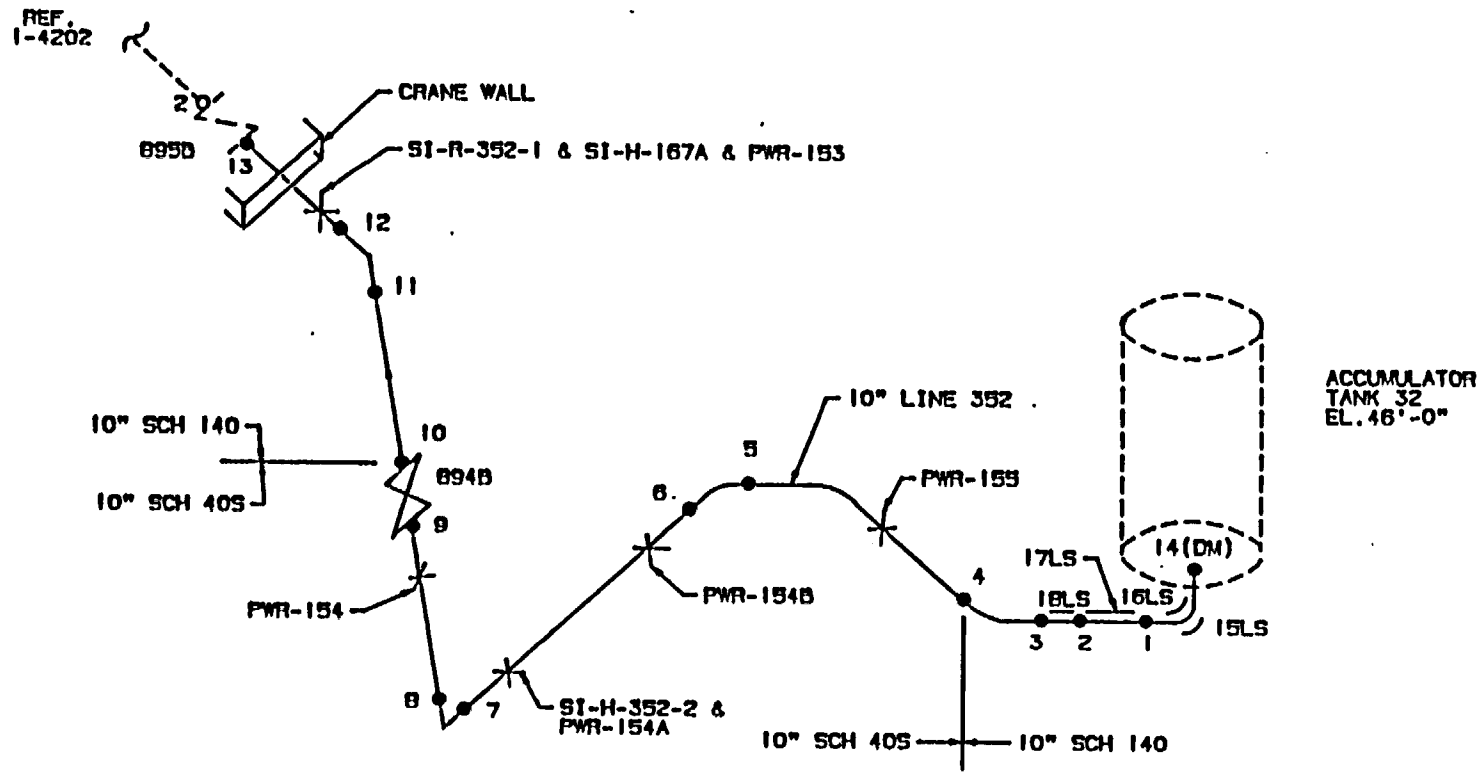

PIPING:
10" SCH 140 1.00"T STAINLESS STEEL
10" SCH 40S .365"T STAINLESS STEEL

VALVE BONNET BOLTING:
894B:10 STUDS & 10 NUTS-1.875" DIAMETER

VALVE MANUFACTURER:
894B:DARLING

INTEGRALLY WELDED ATTACHMENTS:
SI-H-167A:0.375"T

NEW YORK POWER AUTHORITY INDIAN POINT UNIT NO.3	
ACCUMULATOR DISCHARGE 10" LINE 352	
INT-2-2522	REV. 4

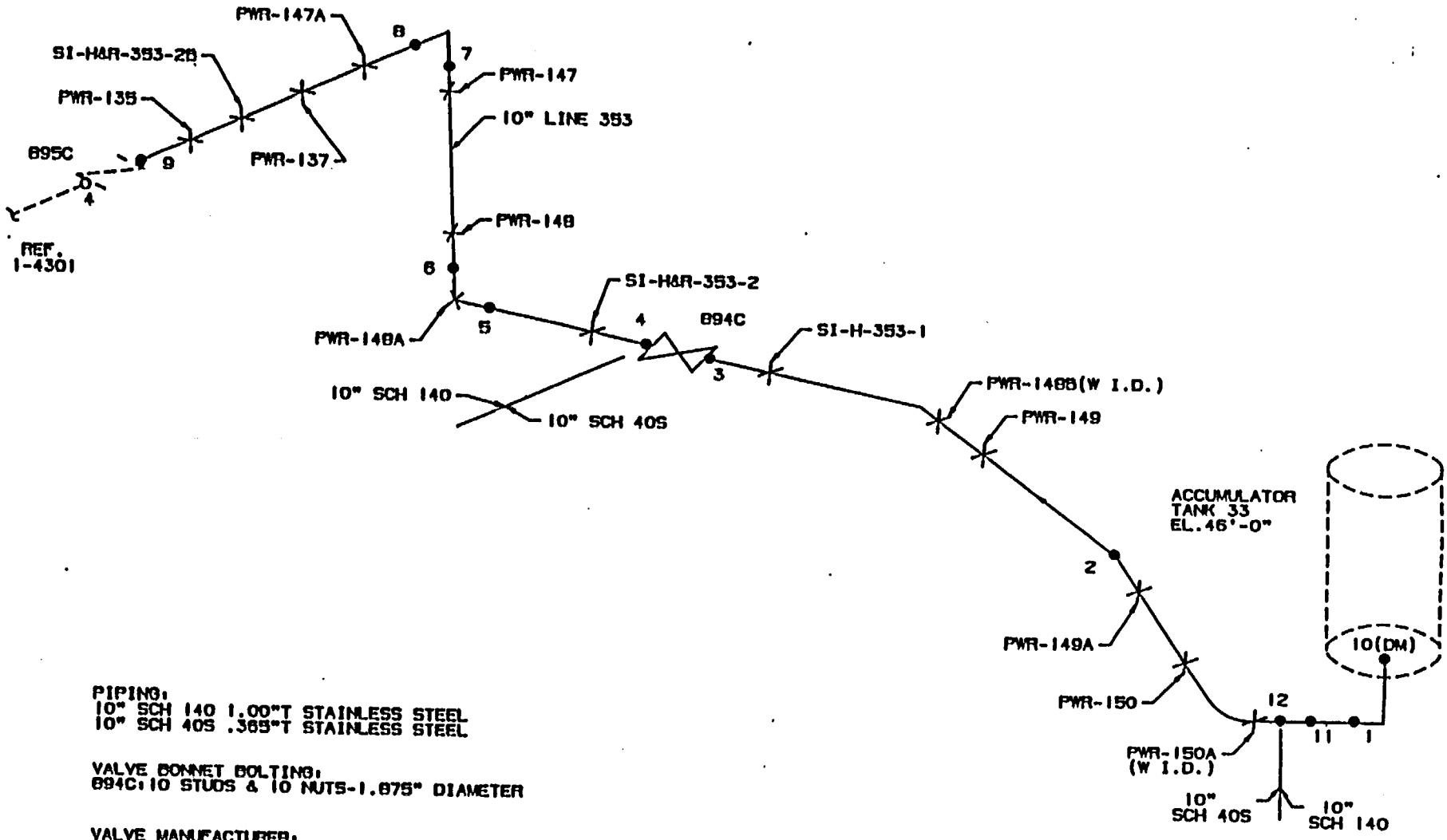

PIPING:
10" SCH 140 1.00"T STAINLESS STEEL
10" SCH 40S .365"T STAINLESS STEEL

VALVE BONNET BOLTING:
894C:10 STUDS & 10 NUTS-1.875" DIAMETER

VALVE MANUFACTURER:
894C:DARLING

INTEGRALLY WELDED ATTACHMENTS:
SI-H&R-353-2:0.216"T
SI-H&R-353-2B:0.50"T
PWR-148A:0.40"T
PWR-148B:0.50"T
PWR-150A:0.50"T

NEW YORK POWER AUTHORITY INDIAN POINT UNIT NO.3	
ACCUMULATOR DISCHARGE 10" LINE 353	
INT-2-2523	REV. 4

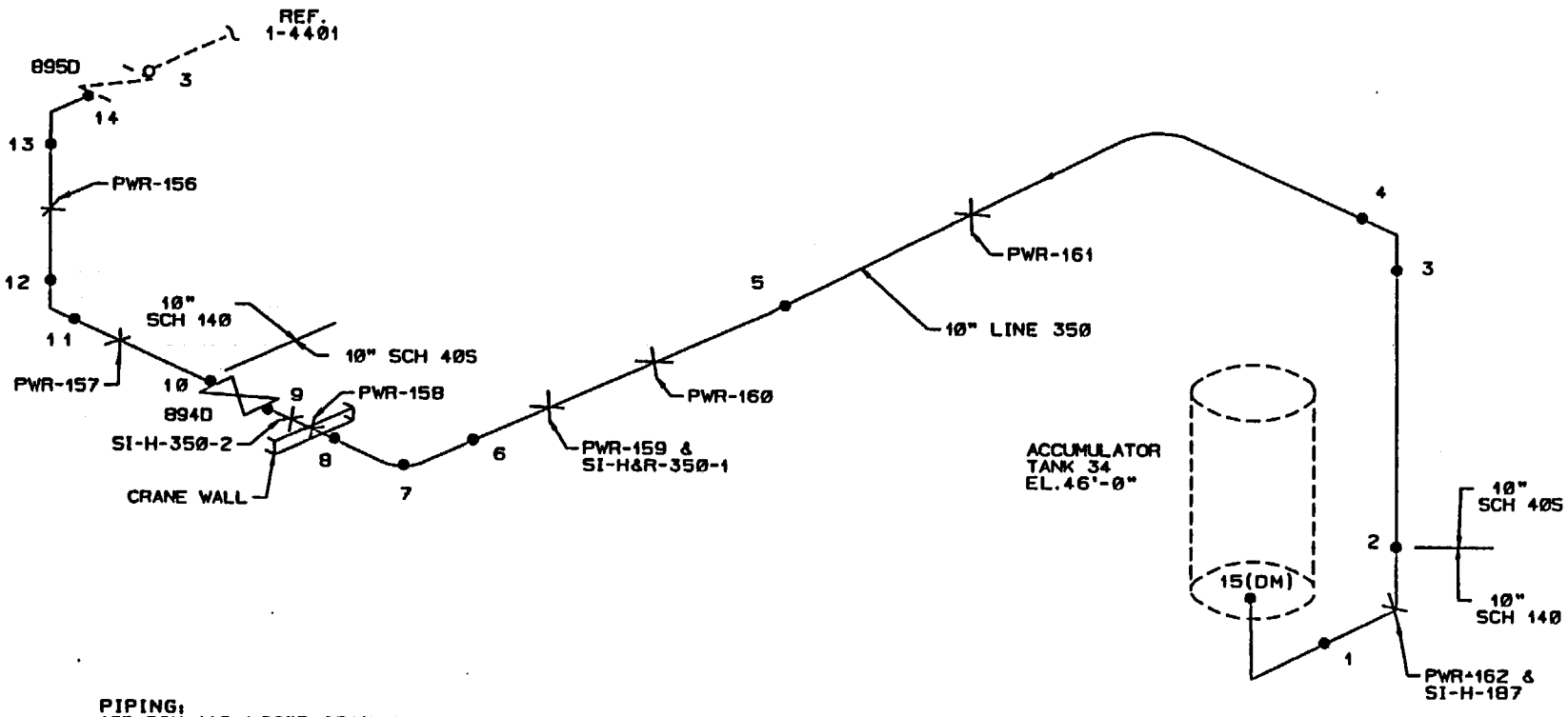

PIPING:
10" SCH 140 1.00"T STAINLESS STEEL
10" SCH 40S .365"T STAINLESS STEEL

VALVE BONNET BOLTING:
894D:10 STUDS & 10 NUTS-1.875" DIAMETER

VALVE MANUFACTURER:
894D:DARLING

INTEGRALLY WELDED ATTACHMENTS:
SI-H-187:0.216"T

NEW YORK POWER AUTHORITY INDIAN POINT UNIT NO.3	
ACCUMULATOR DISCHARGE 10" LINE 350	
INT-2-2524	REV. 5

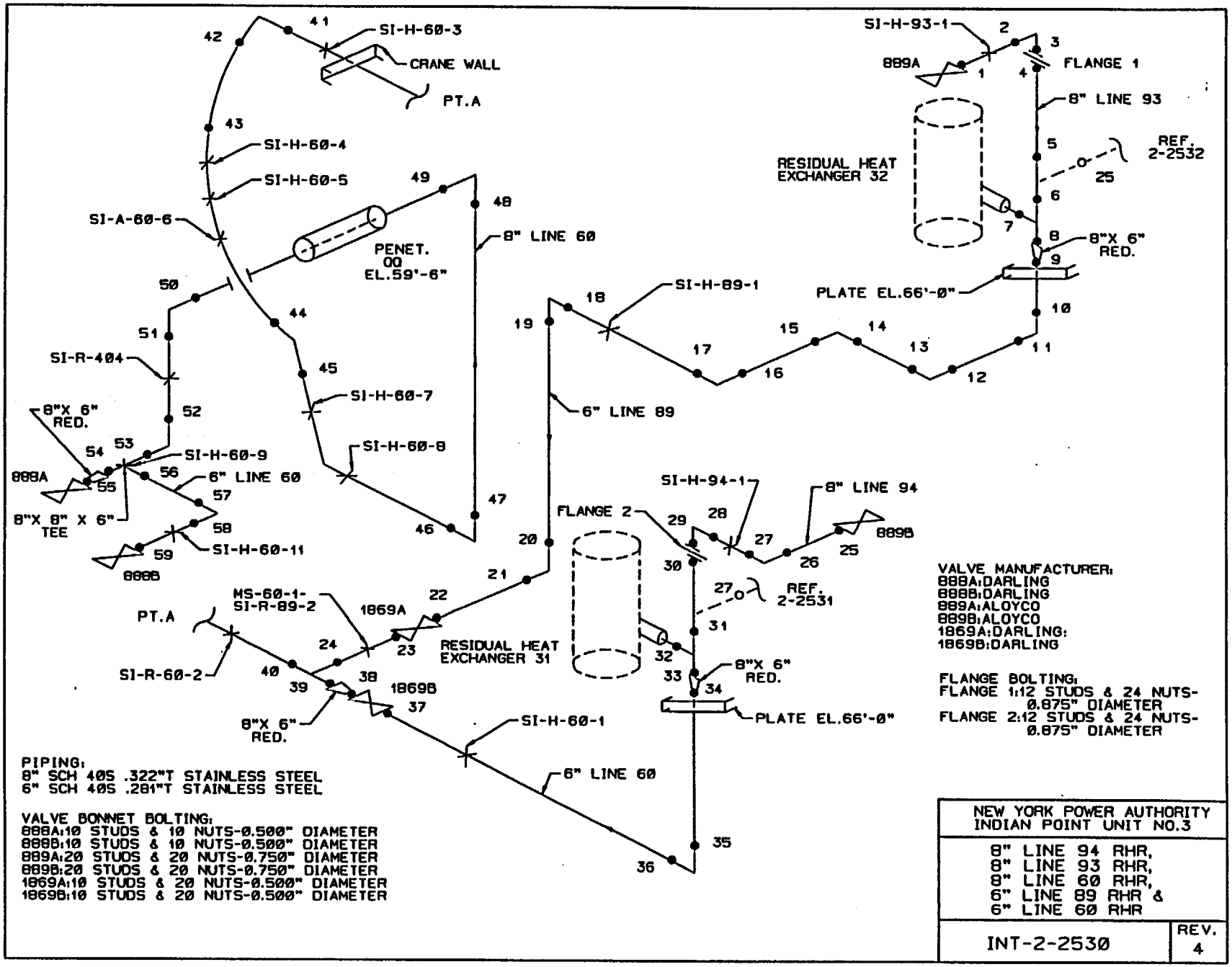

VALVE MANUFACTURER:
888A:DARLING
888B:DARLING
889A:ALOYCO
889B:ALOYCO
1869A:DARLING:
1869B:DARLING

FLANGE BOLTING:
FLANGE 1:12 STUDS & 24 NUTS-
0.875" DIAMETER
FLANGE 2:12 STUDS & 24 NUTS-
0.875" DIAMETER

PIPING:
8" SCH 40S .322"T STAINLESS STEEL
6" SCH 40S .281"T STAINLESS STEEL

VALVE BONNET BOLTING:
888A:10 STUDS & 10 NUTS-0.500" DIAMETER
888B:10 STUDS & 10 NUTS-0.500" DIAMETER
889A:20 STUDS & 20 NUTS-0.750" DIAMETER
889B:20 STUDS & 20 NUTS-0.750" DIAMETER
1869A:10 STUDS & 20 NUTS-0.500" DIAMETER
1869B:10 STUDS & 20 NUTS-0.500" DIAMETER

NEW YORK POWER AUTHORITY INDIAN POINT UNIT NO.3	
8" LINE 94 RHR, 8" LINE 93 RHR, 8" LINE 60 RHR, 6" LINE 89 RHR & 6" LINE 60 RHR	
INT-2-2530	REV. 4

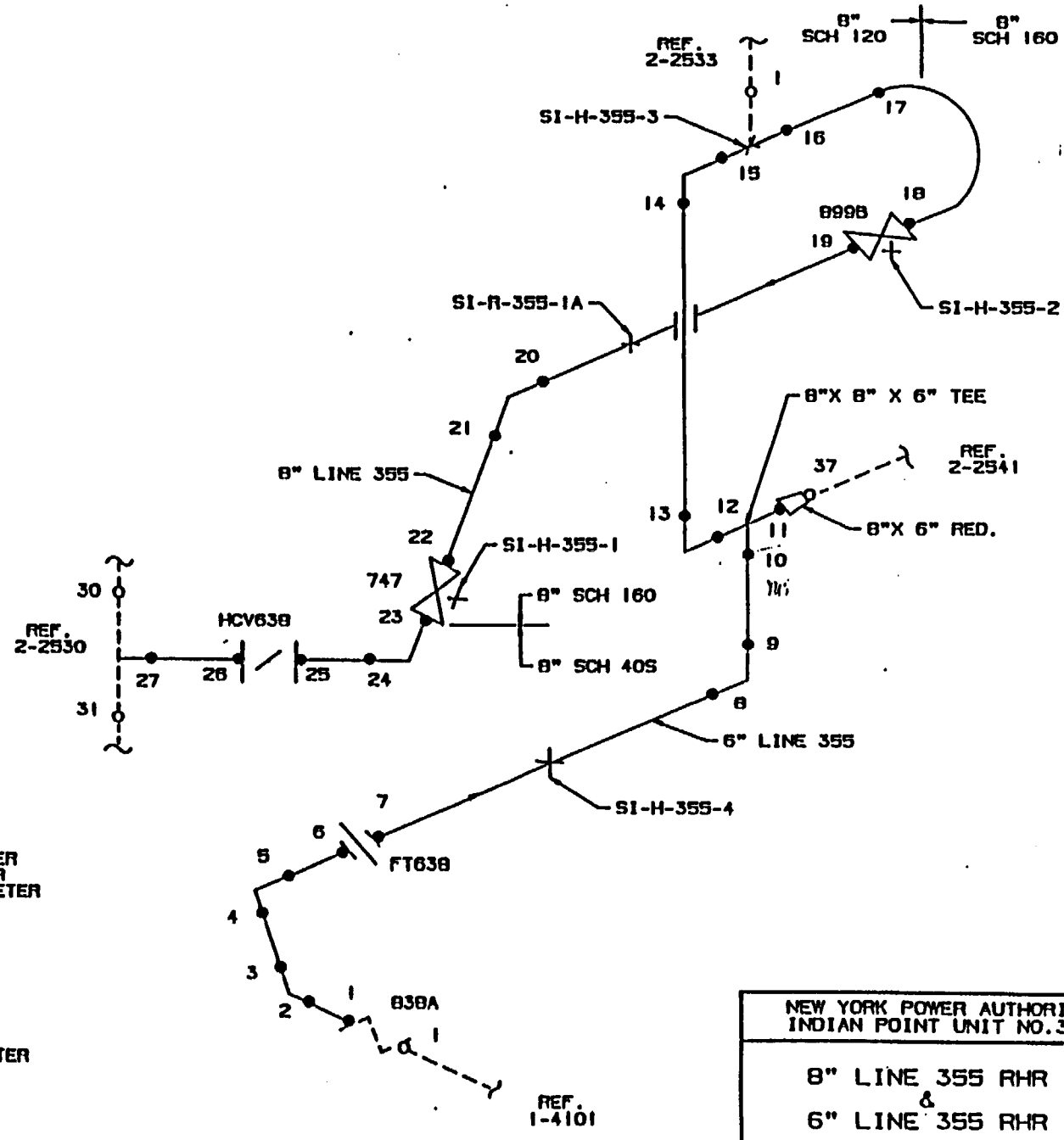

PIPING:
8" SCH 160 .906"T STAINLESS STEEL
8" SCH 120 .719"T STAINLESS STEEL
8" SCH 40S .322"T STAINLESS STEEL
6" SCH 120 .562"T STAINLESS STEEL

VALVE BONNET BOLTING:
8998:16 STUDS & 16 NUTS-1.375" DIAMETER
747:16 STUDS & 16 NUTS-1.875" DIAMETER
HCV638:12 STUDS & 12 NUTS-0.750" DIAMETER

VALVE MANUFACTURER:
8998:DARLING
747:DARLING
HCV638:CONTINENTAL

FLANGE BOLTING:
FT638:12 STUDS & 24 NUTS-1.375" DIAMETER

NEW YORK POWER AUTHORITY INDIAN POINT UNIT NO.3	
8" LINE 355 RHR & 6" LINE 355 RHR	
INT-2-2531	REV. 3

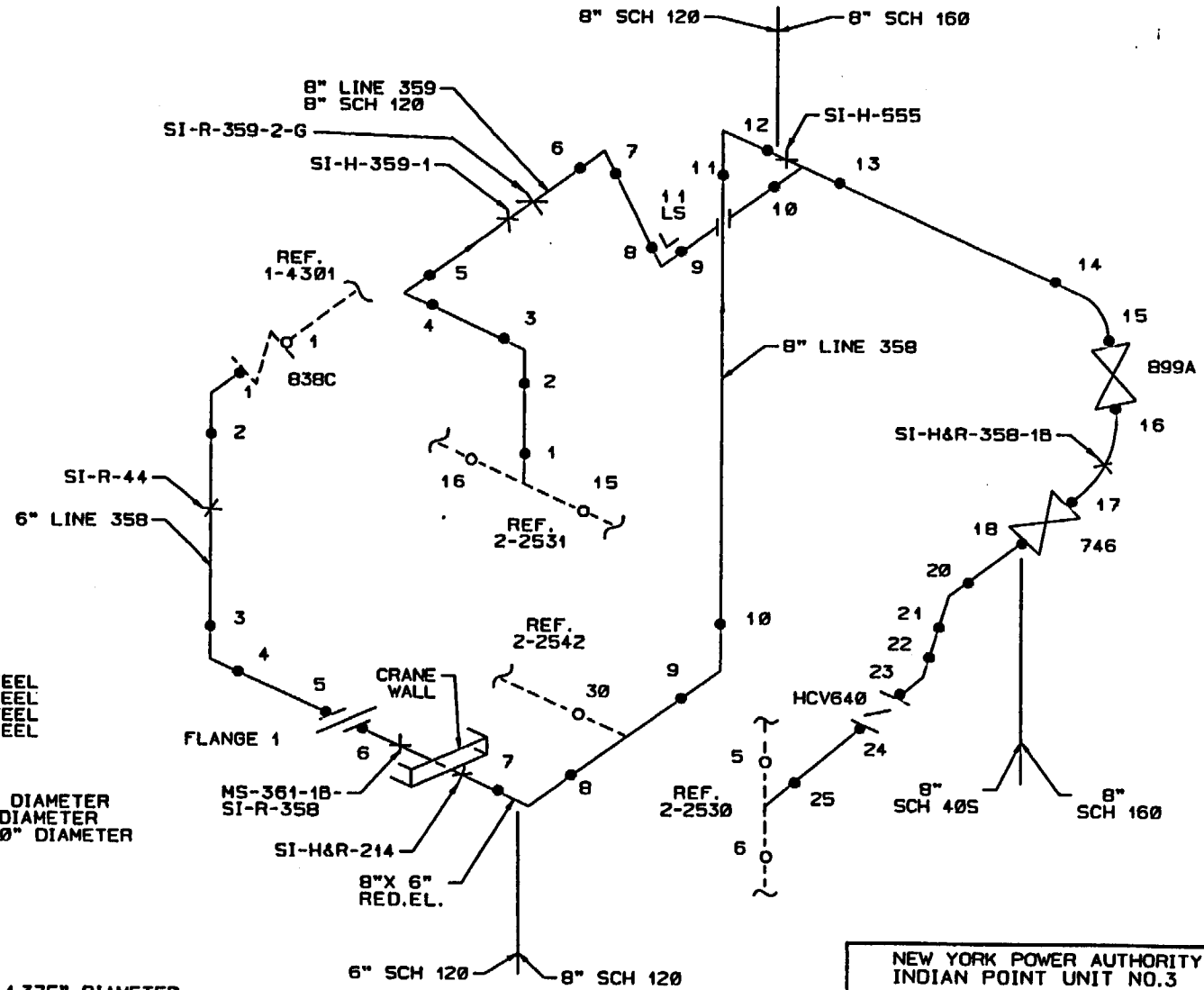

PIPING:
8" SCH 160 .906"T STAINLESS STEEL
8" SCH 120 .719"T STAINLESS STEEL
8" SCH 40S .322"T STAINLESS STEEL
6" SCH 120 .562"T STAINLESS STEEL

VALVE BONNET BOLTING:
899A:16 STUDS & 16 NUTS-1.375" DIAMETER
746:16 STUDS & 16 NUTS-1.875" DIAMETER
HCV640:12 STUDS & 12 NUTS-0.750" DIAMETER

VALVE MANUFACTURER:
899A:DARLING
746:DARLING
HCV640:CONTINENTAL

FLANGE BOLTING:
FLANGE 1:12 STUDS AND 24 NUTS-1.375" DIAMETER

INTEGRALLY WELDED ATTACHMENTS:
SI-H&R-214:0.50"T

NEW YORK POWER AUTHORITY INDIAN POINT UNIT NO.3	
INT-2-2532 8" LINE 358 RHR & 6" LINE 358 RHR INT-2-2533 8" LINE 359 RHR	
INT-2-2532 & INT-2-2533	REV. 6

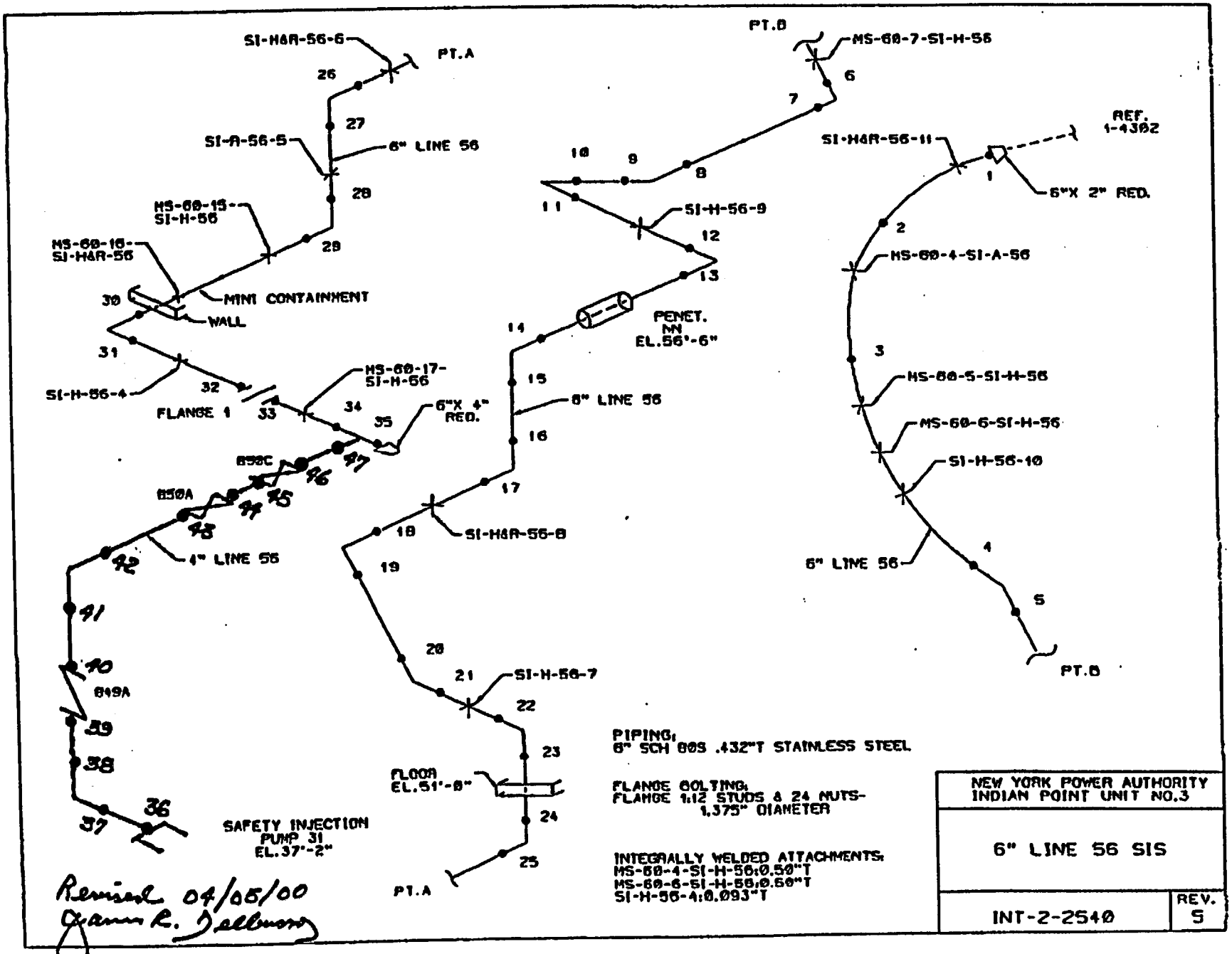
SI-H&R-56-6
PT.A
26
27
SI-A-56-5
6" LINE 56
28
HS-60-15-
SI-H-56
29
HS-60-16-
SI-H&R-56
30
MINI CONTAINMENT
WALL
31
SI-H-56-4
32
FLANGE 1
33
HS-60-17-
SI-H-56
34
35
6"X 4"
RED.
850C
46
47
850A
44
45
43
4" LINE 56
42
41
40
849A
39
38
37
36
SAFETY INJECTION
PUMP 31
EL.37'-2"
PT.B
MS-60-7-SI-H-56
6
7
10
9
8
11
SI-H-56-9
12
13
PENET.
NN
EL.56'-6"
14
15
6" LINE 56
16
17
SI-H&R-56-8
18
19
20
21
SI-H-56-7
22
23
FLOOR
EL.51'-8"
24
25
PT.A
REF.
1-4302
SI-H&R-56-11
1
6"X 2" RED.
2
MS-60-4-SI-A-56
3
MS-60-5-SI-H-56
MS-60-6-SI-H-56
SI-H-56-10
6" LINE 56
4
5
PT.B
PIPING:
6" SCH 80S .432"T STAINLESS STEEL
FLANGE BOLTING:
FLANGE 1:12 STUDS & 24 NUTS-
1.375" DIAMETER
INTEGRALLY WELDED ATTACHMENTS:
MS-60-4-SI-H-56:0.50"T
MS-60-6-SI-H-56:0.50"T
SI-H-56-4:0.093"T
Revised 04/05/00
Dawn R. Dellmann
NEW YORK POWER AUTHORITY
INDIAN POINT UNIT NO.3
6" LINE 56 SIS
INT-2-2540
REV.
5

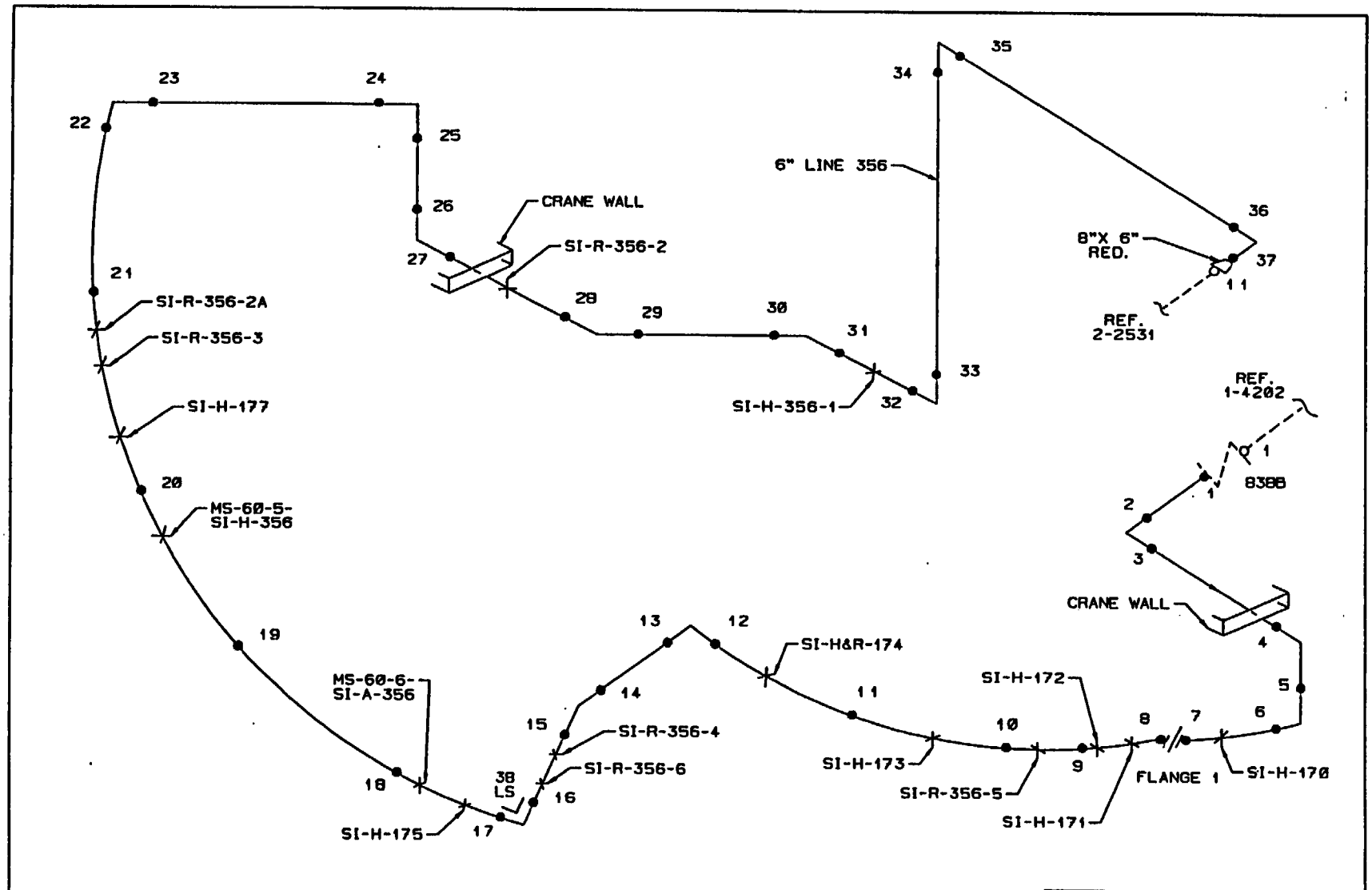

PIPING:
6" SCH 120 .562"T STAINLESS STEEL

FLANGE BOLTING:
FLANGE 1: 12 STUDS & 24 NUTS-1.375" DIAMETER

INTEGRALLY WELDED ATTACHMENTS
SI-H&R-174:0.203"T
SI-A-356-F:0.50"T
SI-H-177:0.50"T

NEW YORK POWER AUTHORITY INDIAN POINT UNIT NO.3	
6" LINE 356 RHR	
INT-2-2541	REV. 5

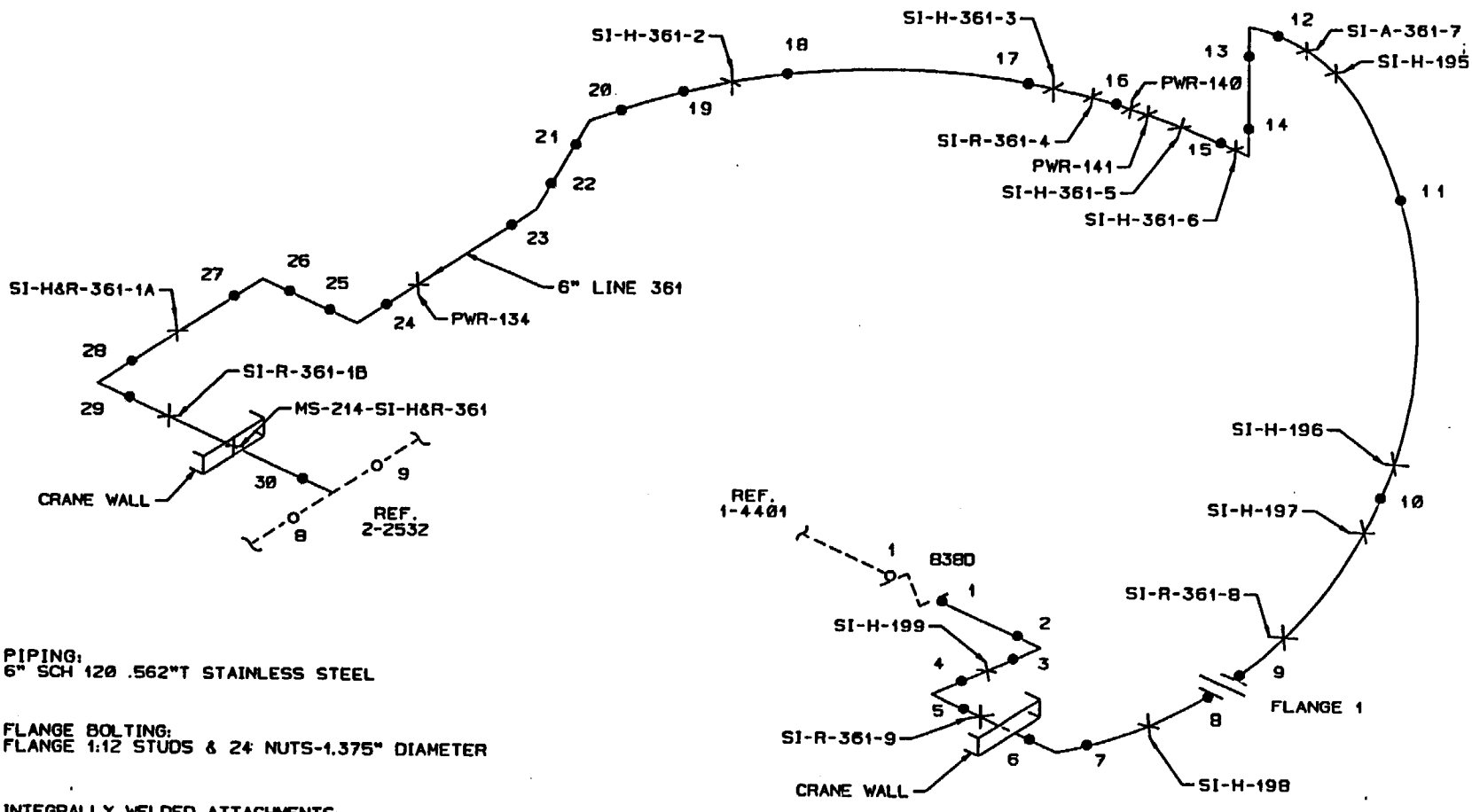

PIPING:
6" SCH 120 .562"T STAINLESS STEEL

FLANGE BOLTING:
FLANGE 1:12 STUDS & 24 NUTS-1.375" DIAMETER

INTEGRALLY WELDED ATTACHMENTS:
MS-214-SI-H&R-361:0.375"T
SI-H&R-361-1A:0.50"T
SI-H-361-5:0.375"T
SI-A-361-7:0.50"T
SI-H-195:0.50"T
SI-H-196:0.50"T

NEW YORK POWER AUTHORITY INDIAN POINT UNIT NO.3	
6" LINE 361 RHR	
INT-2-2542	REV. 5

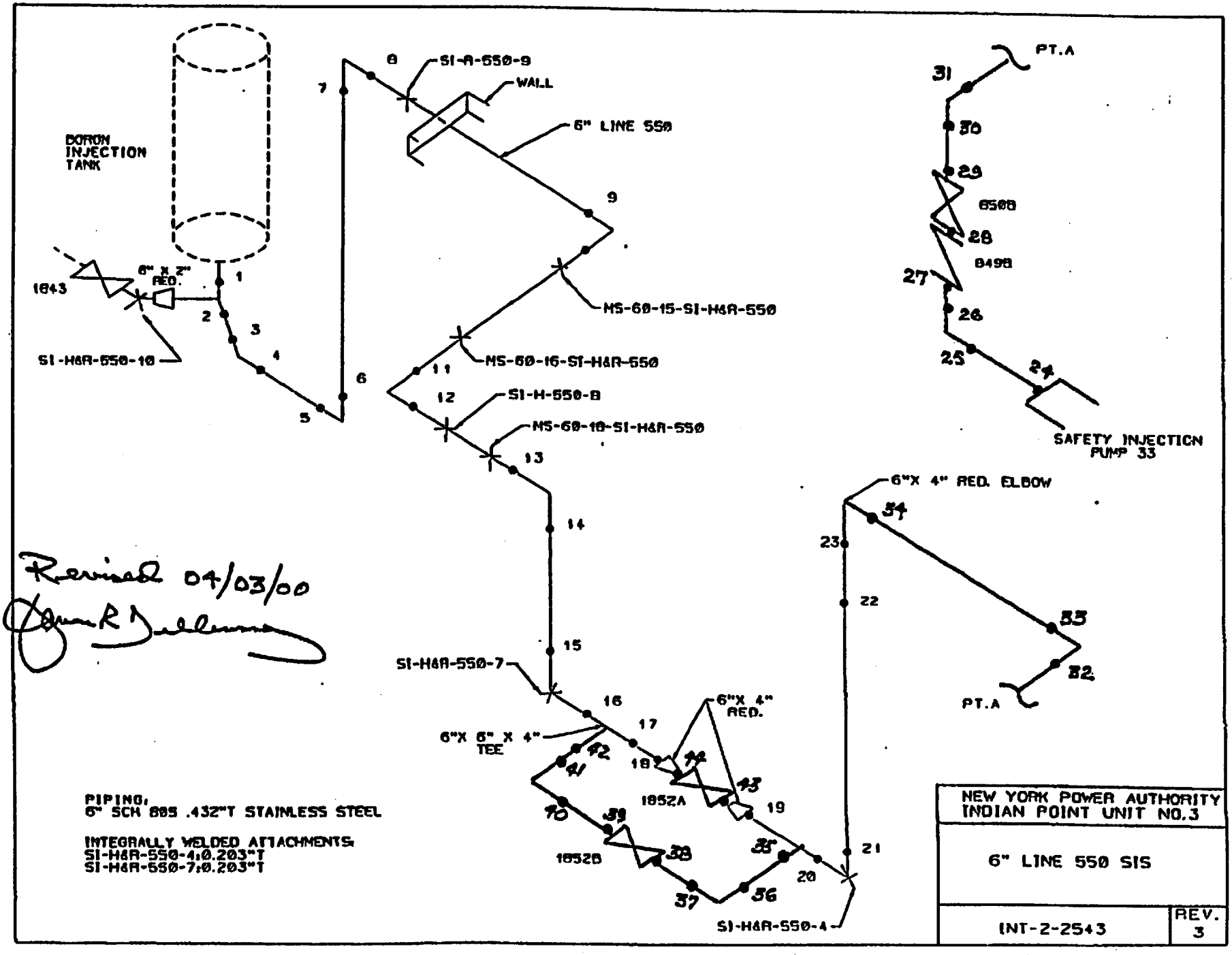
BORON INJECTION TANK
1843
6" X 2" RED.
SI-H&R-550-10
SI-A-550-9
WALL
6" LINE 550
MS-60-15-SI-H&R-550
MS-60-16-SI-H&R-550
SI-H-550-8
MS-60-18-SI-H&R-550
SI-H&R-550-7
6"X 6" X 4" TEE
6"X 4" RED.
1852A
1852B
SI-H&R-550-4
6"X 4" RED. ELBOW
PT.A
6500
8498
SAFETY INJECTION PUMP 33
PT.A
Revised 04/03/00
PIPING:
6" SCH 80S .432"T STAINLESS STEEL
INTEGRALLY WELDED ATTACHMENTS:
SI-H&R-550-4:0.203"T
SI-H&R-550-7:0.203"T
NEW YORK POWER AUTHORITY
INDIAN POINT UNIT NO.3
6" LINE 550 SIS
INT-2-2543
REV. 3

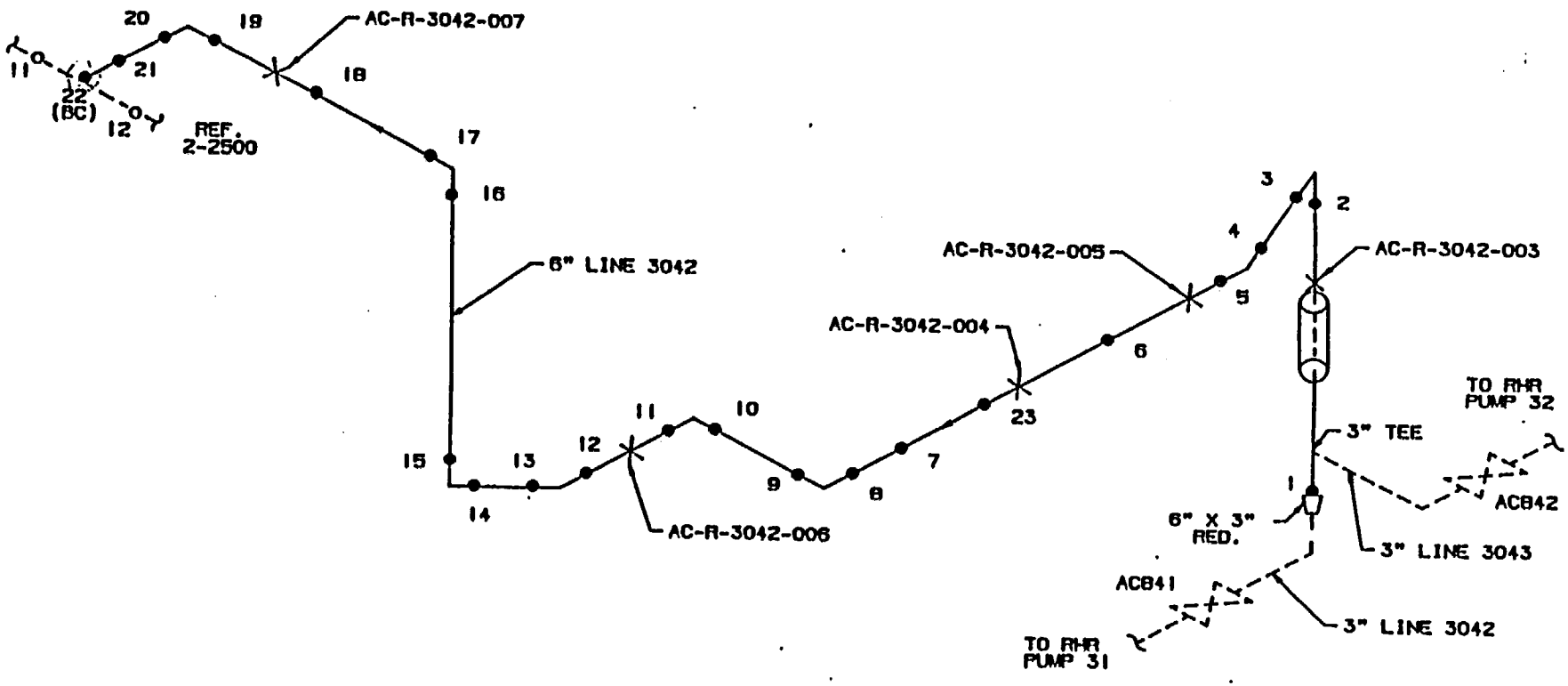

PIPING:
6" SCH 40S 0.281"T STAINLESS STEEL

NOTE: INSTALLED 1990

NEW YORK POWER AUTHORITY INDIAN POINT UNIT NO.3	
6" LINE 3042 RHR	
INT-2-2544	REV. 0

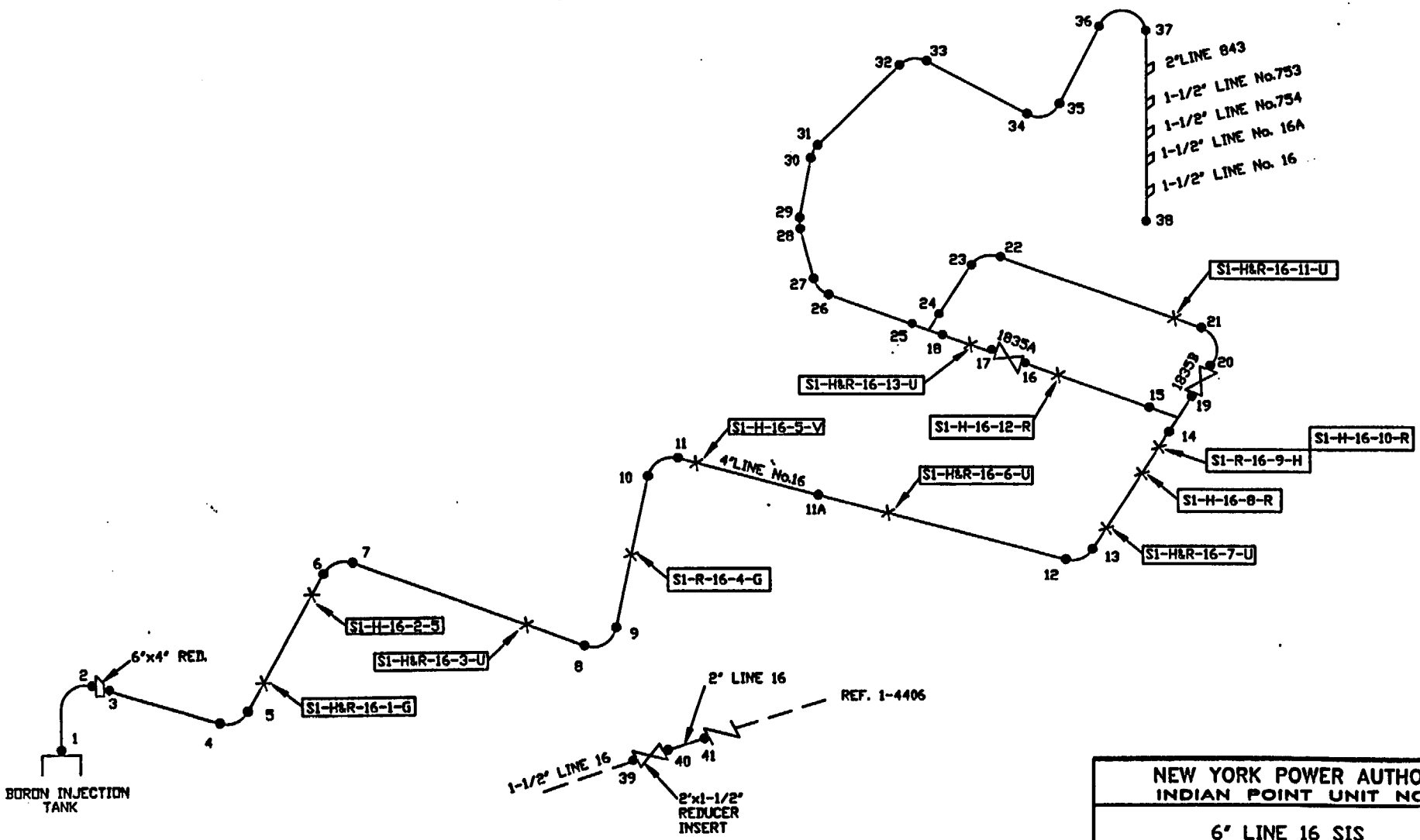

NEW YORK POWER AUTHORITY
INDIAN POINT UNIT NO. 3

6" LINE 16 SIS
4" LINE 16 SIS
2" LINE 16 SIS

INT-2-2346 | REV. 0

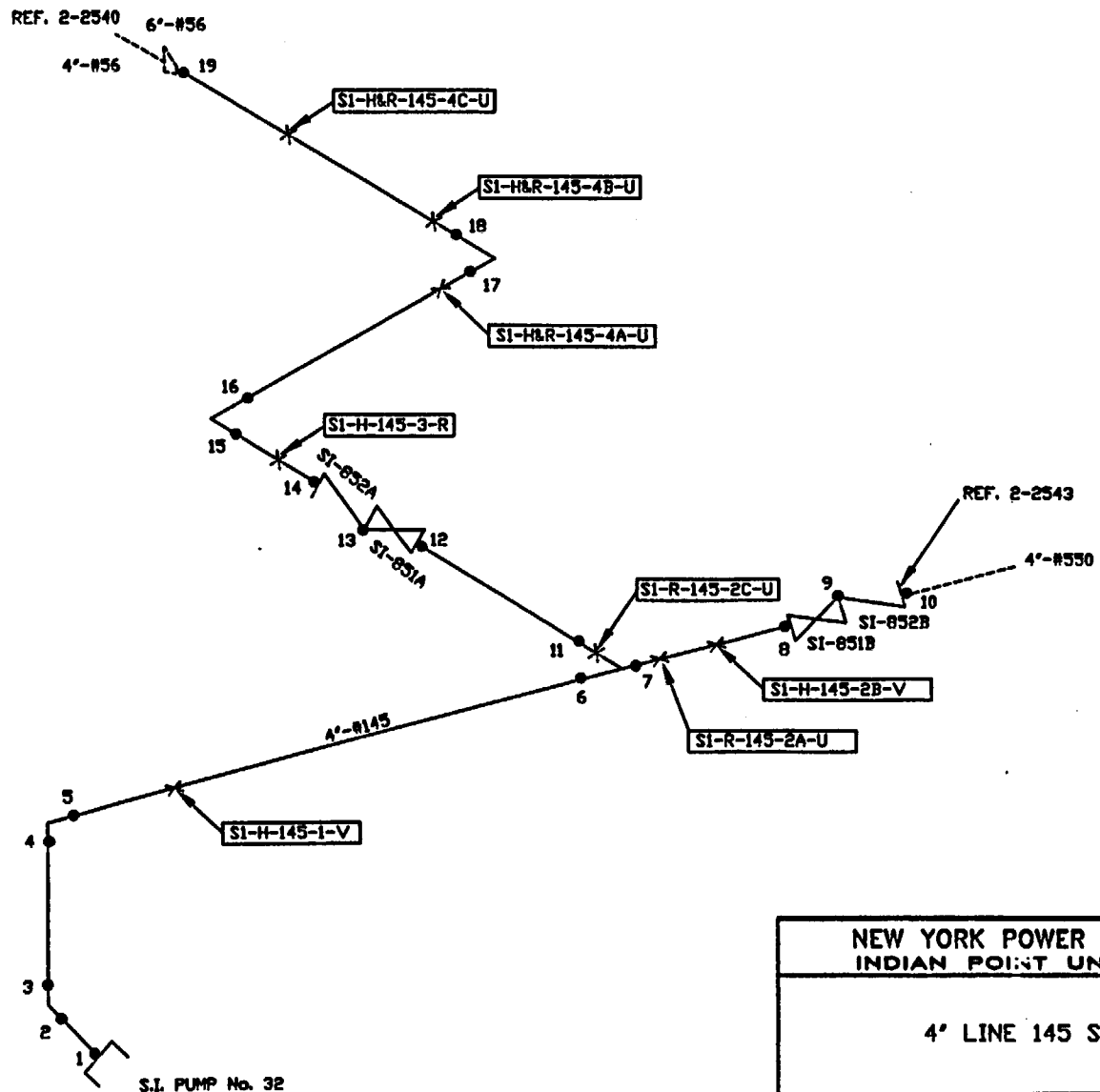

NEW YORK POWER AUTHORITY
INDIAN POINT UNIT NO. 3

4" LINE 145 SIS

INT-2-2547 | REV. 0

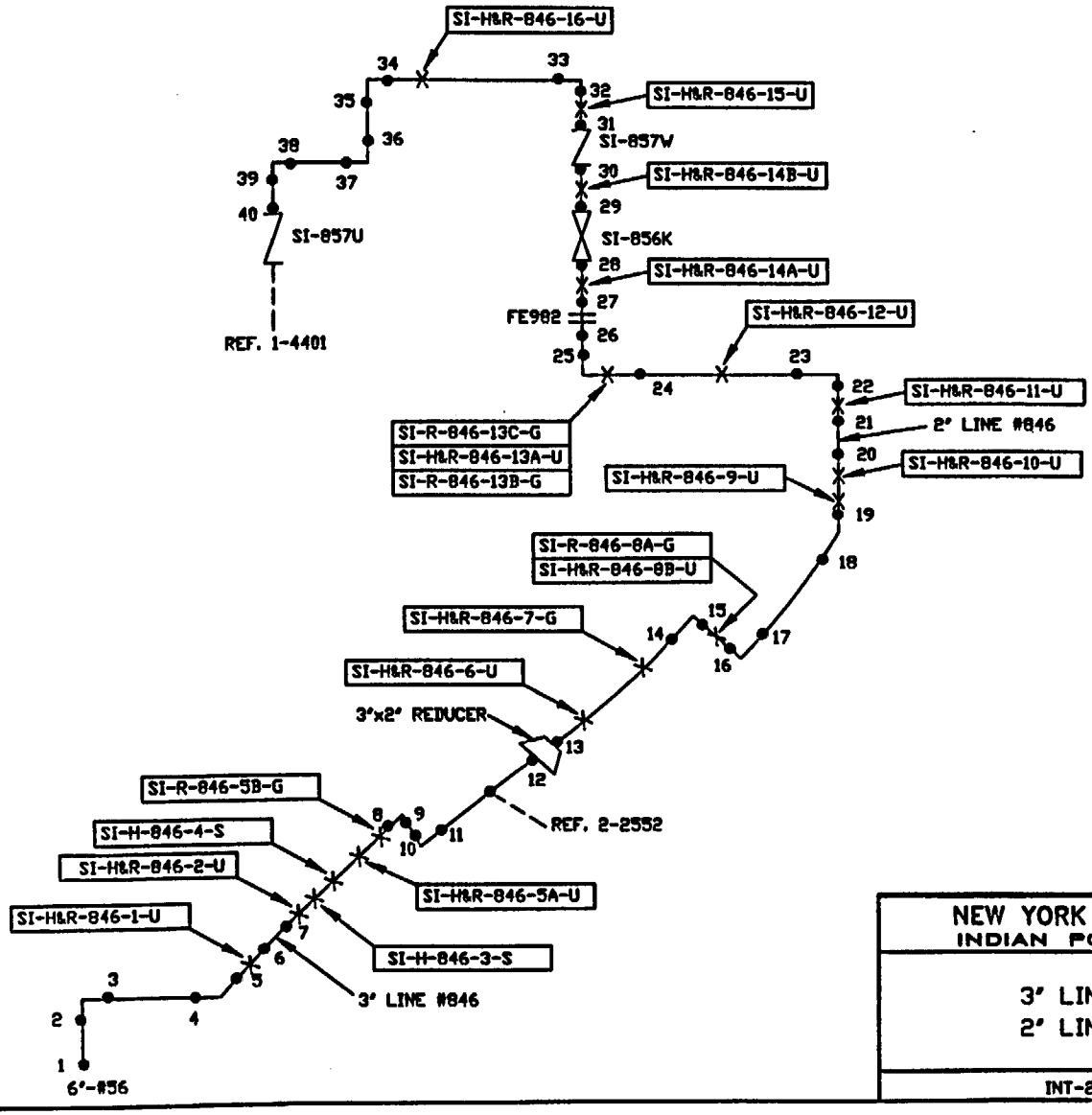

NEW YORK POWER AUTHORITY
INDIAN POINT UNIT NO. 3

3" LINE 846 SIS
2" LINE 846 SIS

INT-2-2548 | REV. 0

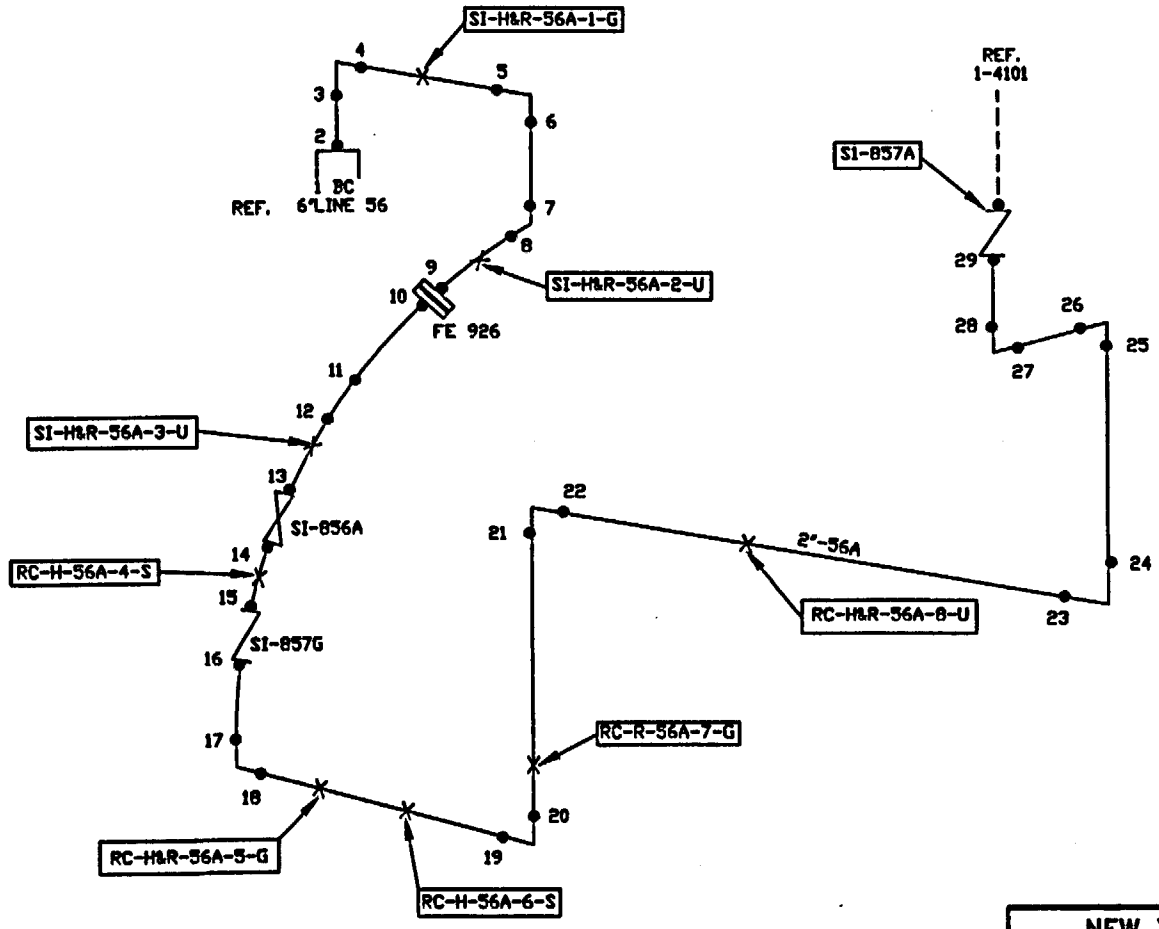

NEW YORK POWER AUTHORITY
INDIAN POINT UNIT NO. 3

2" LINE 56A SIS

INT-2-2549 | REV. 0

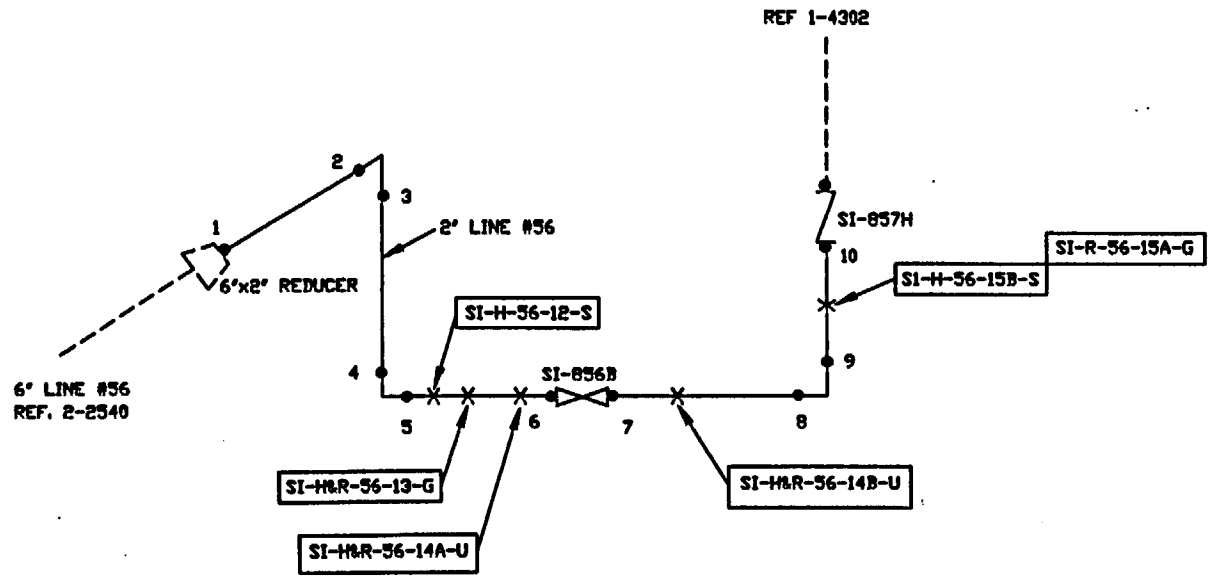

NEW YORK POWER AUTHORITY
INDIAN POINT UNIT NO. 3

2" LINE 56 SIS

INT-2-2550 | REV. 0

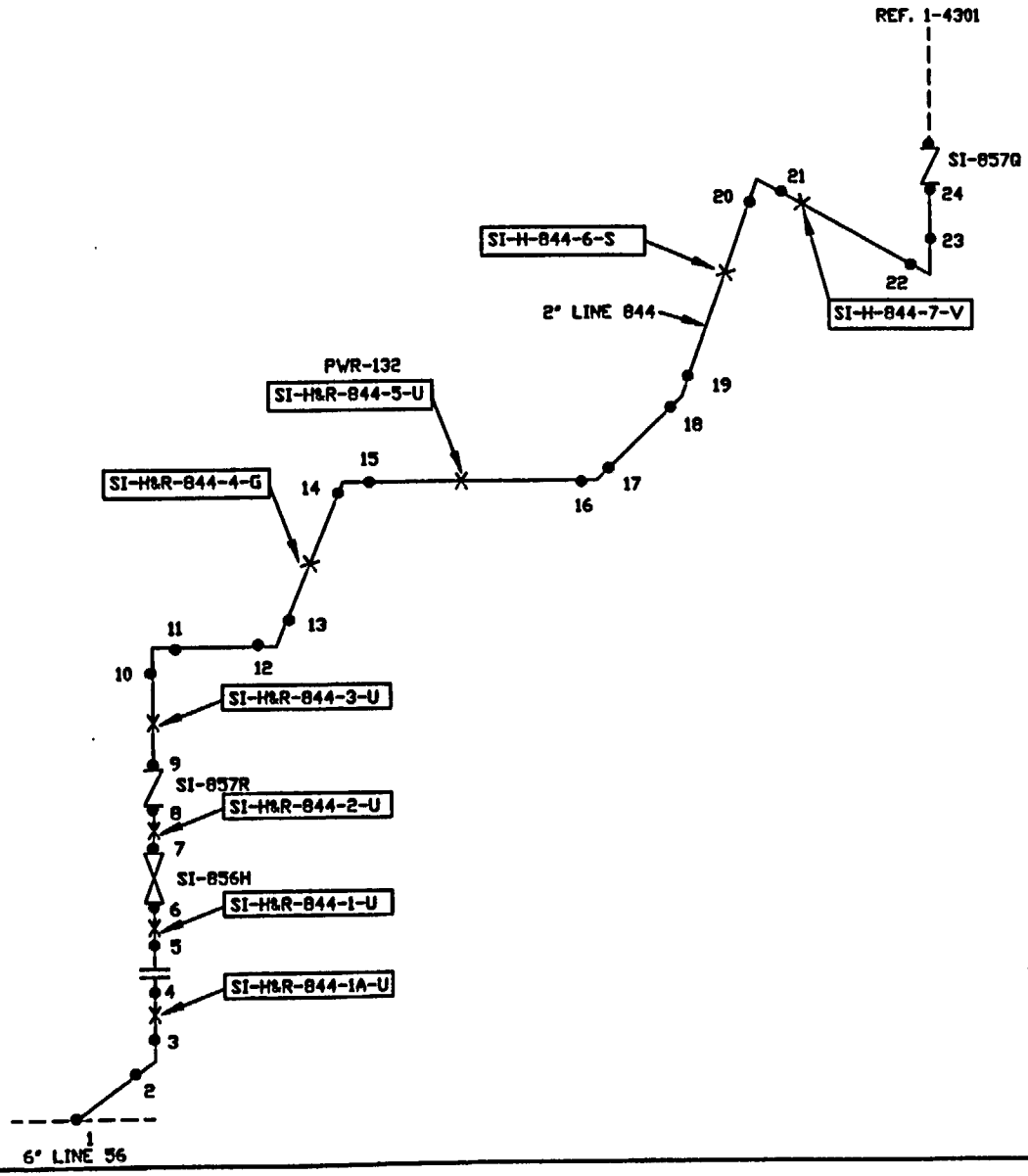

NEW YORK POWER AUTHORITY
INDIAN POINT UNIT NO. 3

2" LINE 844 SIS

INT-2-2551 | REV. 0

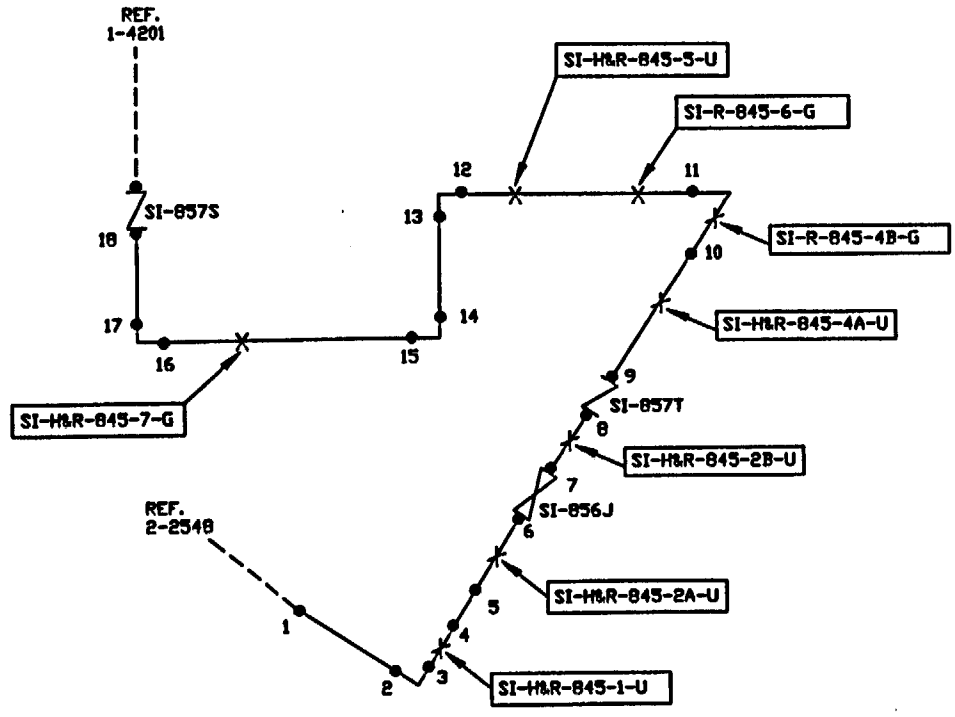

NEW YORK POWER AUTHORITY
INDIAN POINT UNIT NO. 3

2" LINE 845 SIS

INT-2-2552 | REV. 0

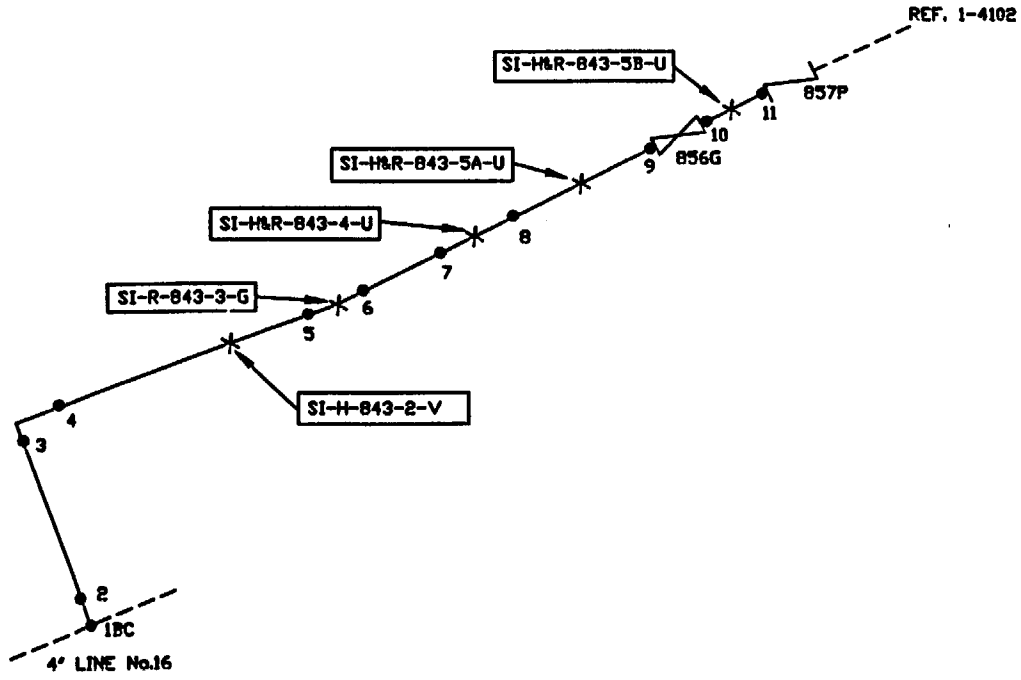

NEW YORK POWER AUTHORITY
INDIAN POINT UNIT NO. 3

2" LINE 843 SIS

INT-2-2553 | REV. 0

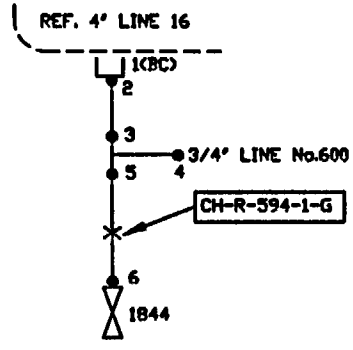

NEW YORK POWER AUTHORITY
INDIAN POINT UNIT NO. 3

2" LINE 594 SIS

INT-2-2554 | REV. 0

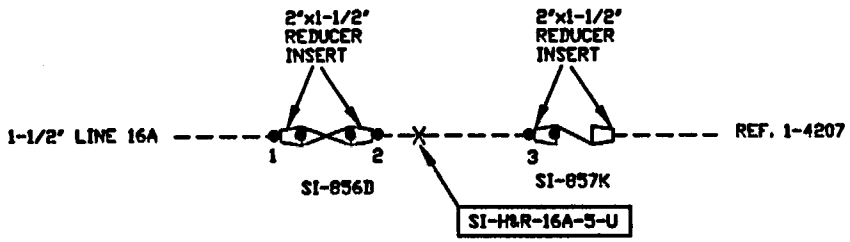

NEW YORK POWER AUTHORITY
INDIAN POINT UNIT NO. 3

2" LINE 16A SIS

INT-2-2555 | REV. 0

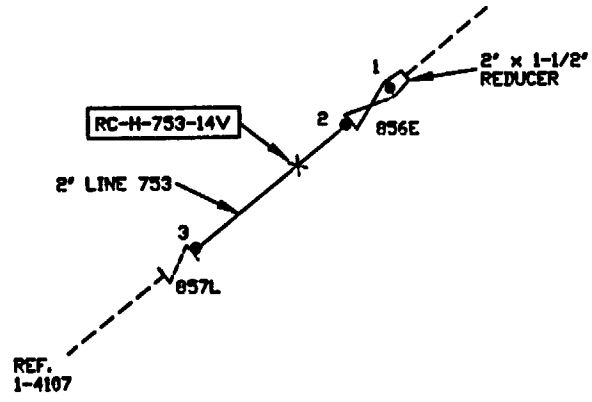

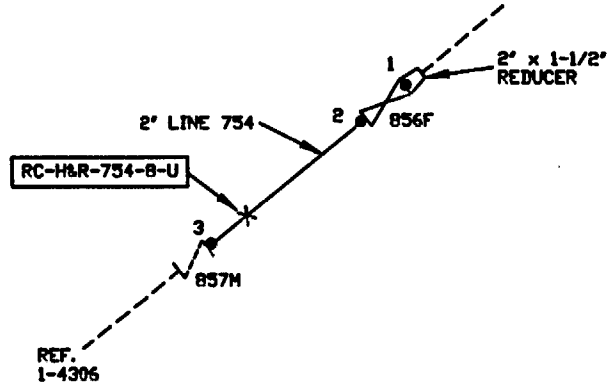

NEW YORK POWER AUTHORITY INDIAN POINT UNIT NO. 3	
INT-2-2556 2" LINE 753 SIS INT-2-2557 2" LINE 754 SIS	
INT-2-2556 and INT-2-2557	REV. 0

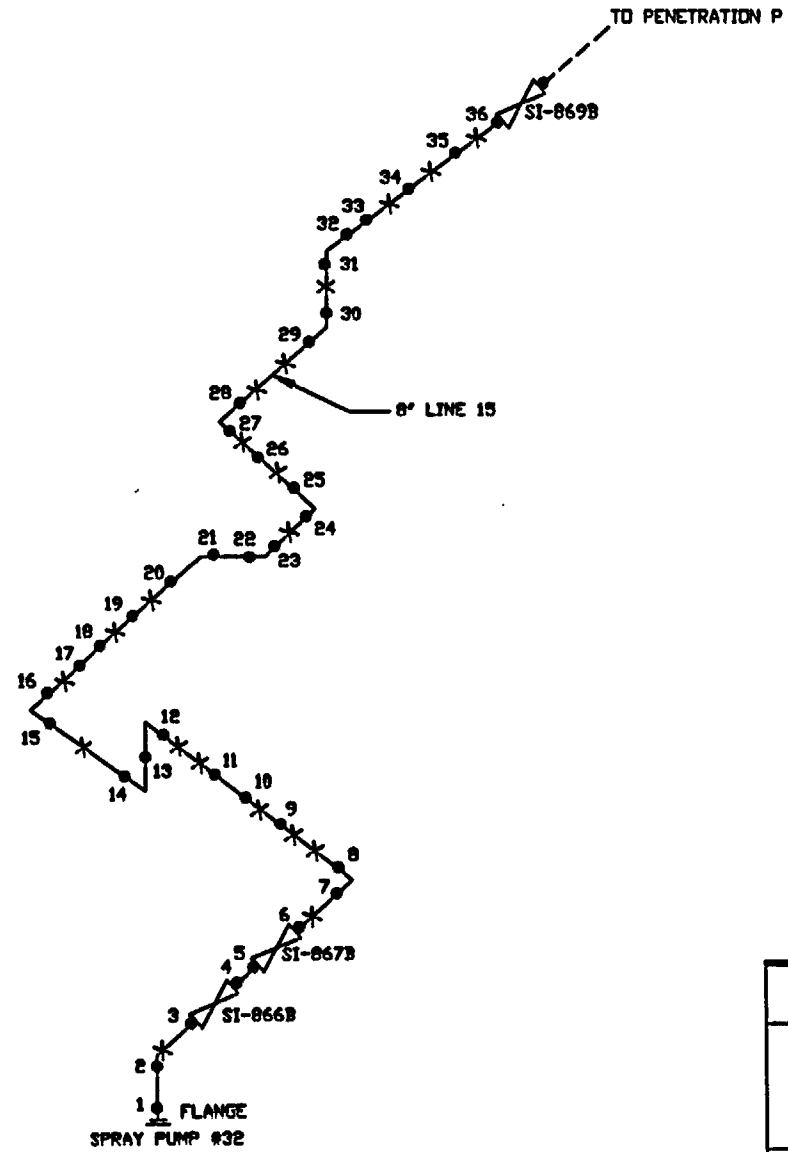

NEW YORK POWER AUTHORITY
INDIAN POINT UNIT NO. 3

8" LINE 15
CONTAINMENT SPRAY

INT-2-2601 | REV. 1

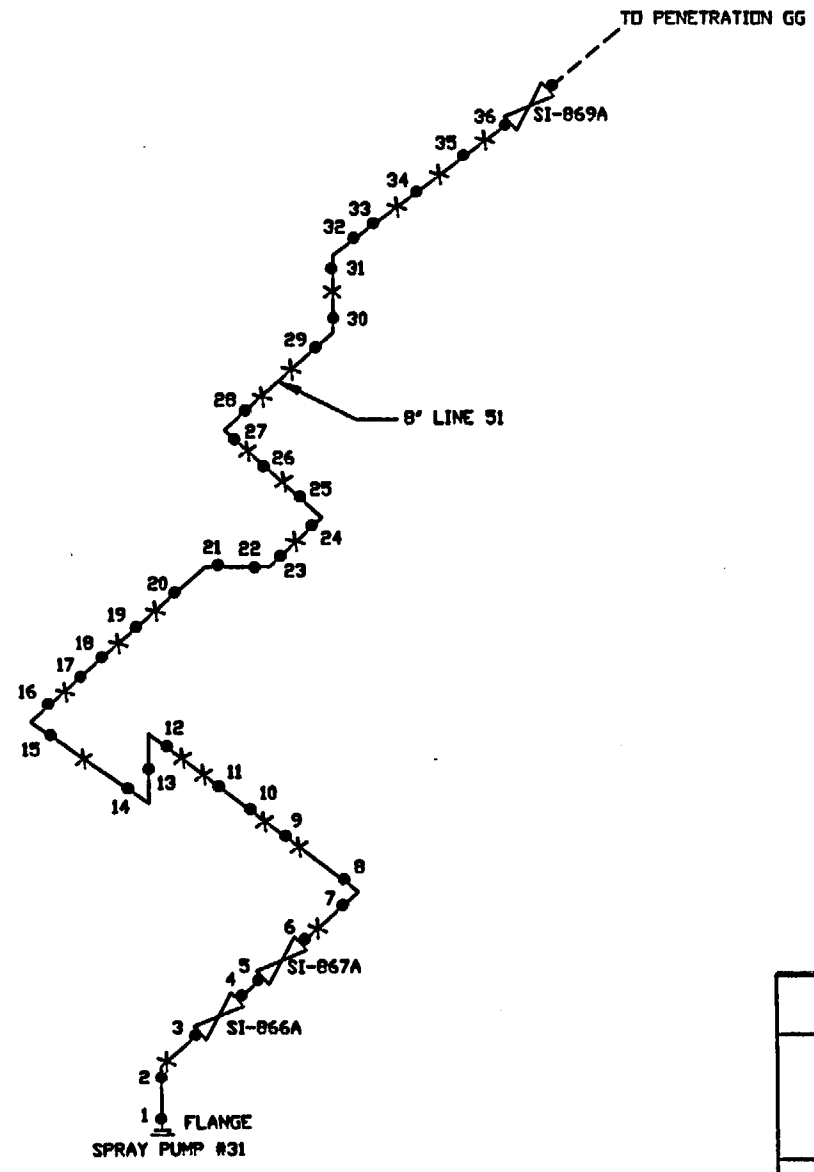

NEW YORK POWER AUTHORITY
INDIAN POINT UNIT NO. 3

8" LINE 51
CONTAINMENT SPRAY

INT-2-2602 | REV. 0

RESIDUAL HEAT REMOVAL PUMP
ACAPRH1-31

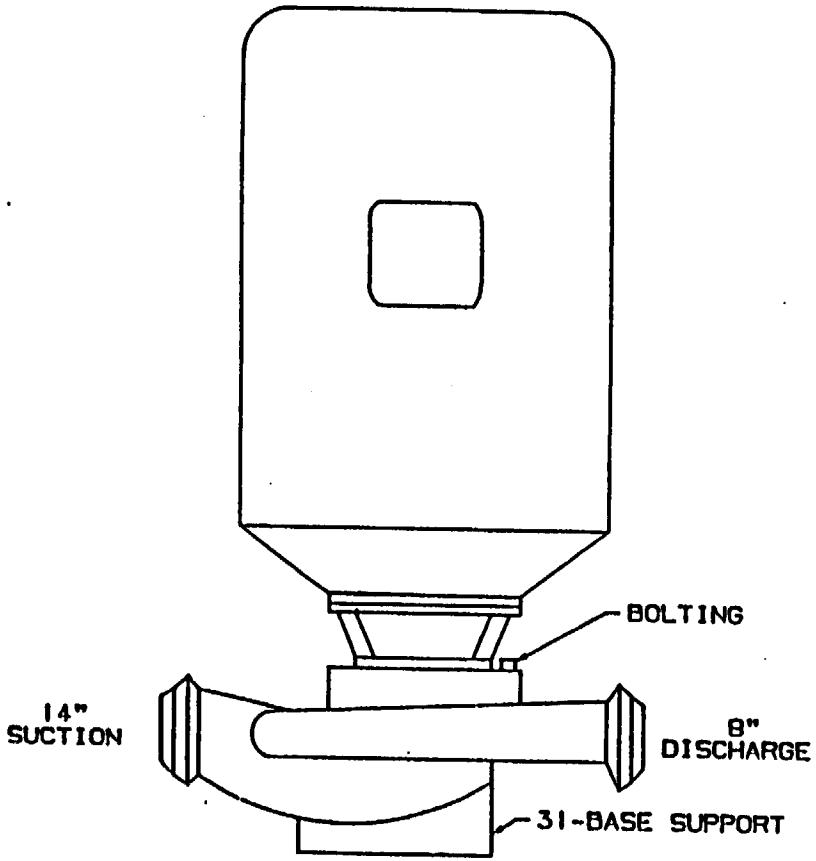

RESIDUAL HEAT REMOVAL PUMP
ACAPRH2-32

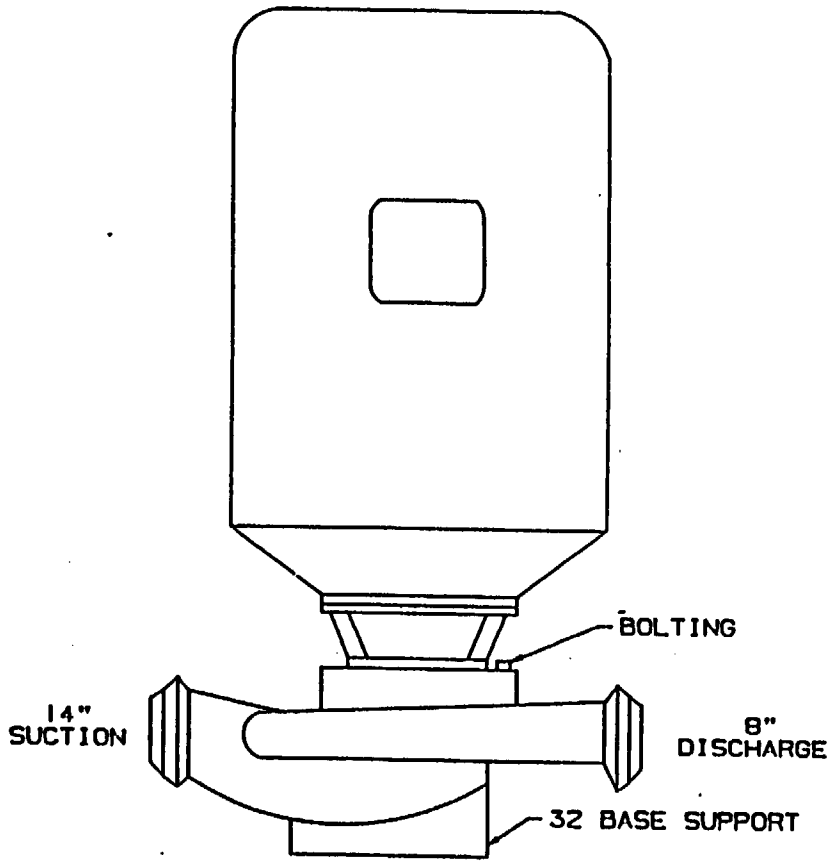

INTEGRALLY WELDED ATTACHMENTS: NOT APPLICABLE
COMPONENT SUPPORTS: BASE SUPPORT
BOLTING: 4-0.75" DIAMETER
CASING WELD: NOT APPLICABLE
0 REFERENCE: CENTERLINE OF 8" DISCHARGE

NEW YORK POWER AUTHORITY INDIAN POINT UNIT NO.3	
RESIDUAL HEAT REMOVAL PUMPS ACAPRH1-31 & ACAPRH2-32	
INT-2-3100	REV. 2

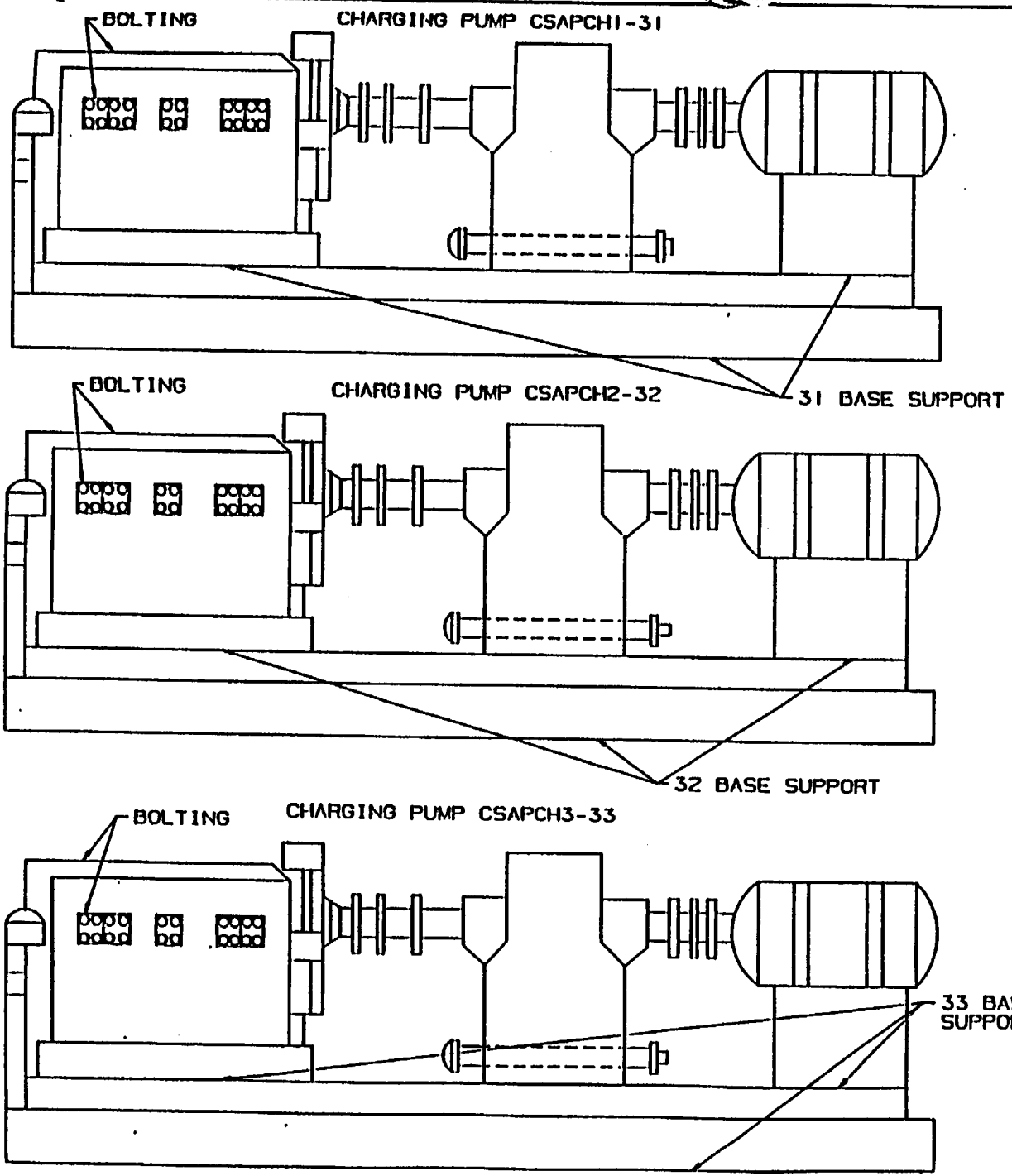

INTEGRALLY WELDED ATTACHMENTS: NOT APPLICABLE

COMPONENT SUPPORTS: 31, 32 & 33 BASE SUPPORTS

BOLTING: 40-1.25" DIAMETER

CASING WELD: NOT APPLICABLE

NEW YORK POWER AUTHORITY INDIAN POINT UNIT NO.3	
CHARGING PUMPS CSAPCH1-31, CSAPCH2-32 & CSAPCH3-33	
INT-2-3110	REV. 2

SAFETY INJECTION PUMP
SIAPS11-31

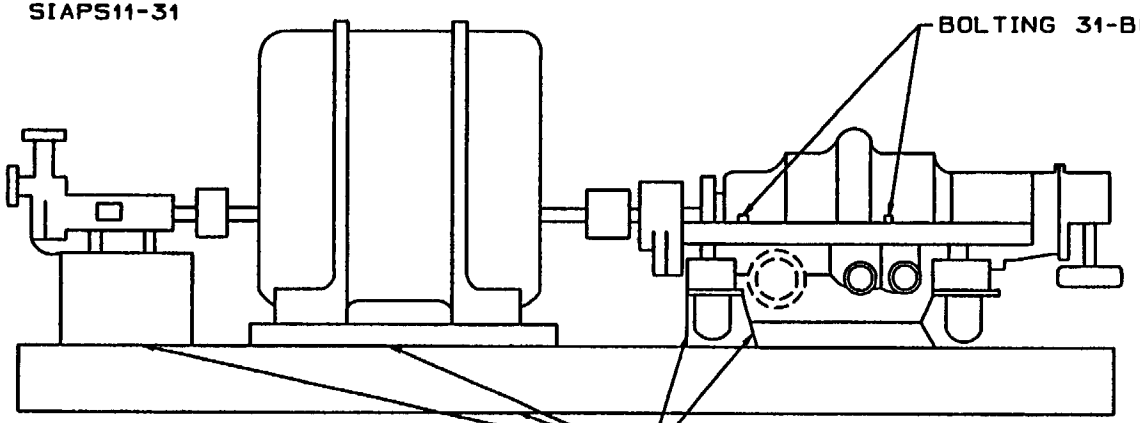

INTEGRALLY WELDED ATTACHMENTS:
NOT APPLICABLE

COMPONENT SUPPORTS:
AS APPLICABLE

BOLTING: STUDS AND CAP NUTS:
STUDS B-1 THRU B-49
2.000" DIAMETER STUDS

CASING WELD: NOT APPLICABLE

SAFETY INJECTION PUMP
SIAPS12-32

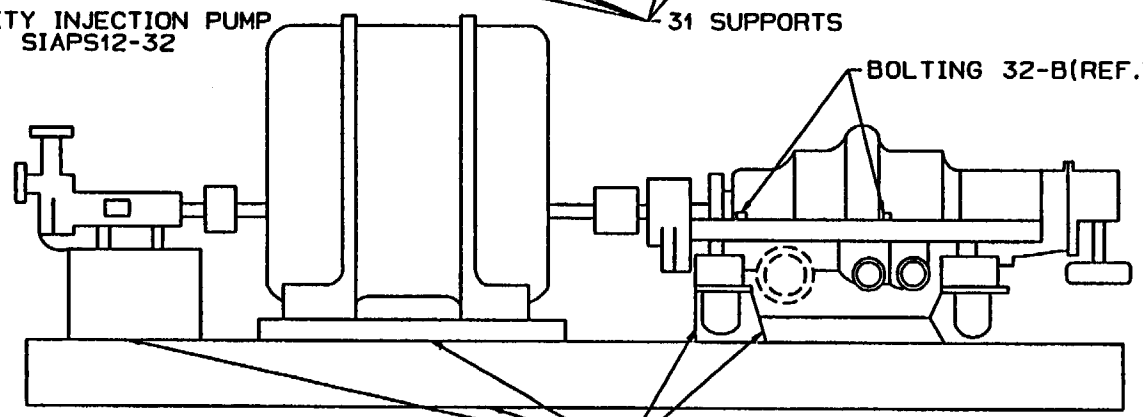

NOTE: EACH SAFETY INJECTION PUMP STUD COVERED BY NUT CAP.

SAFETY INJECTION PUMP
SIAPS13-33

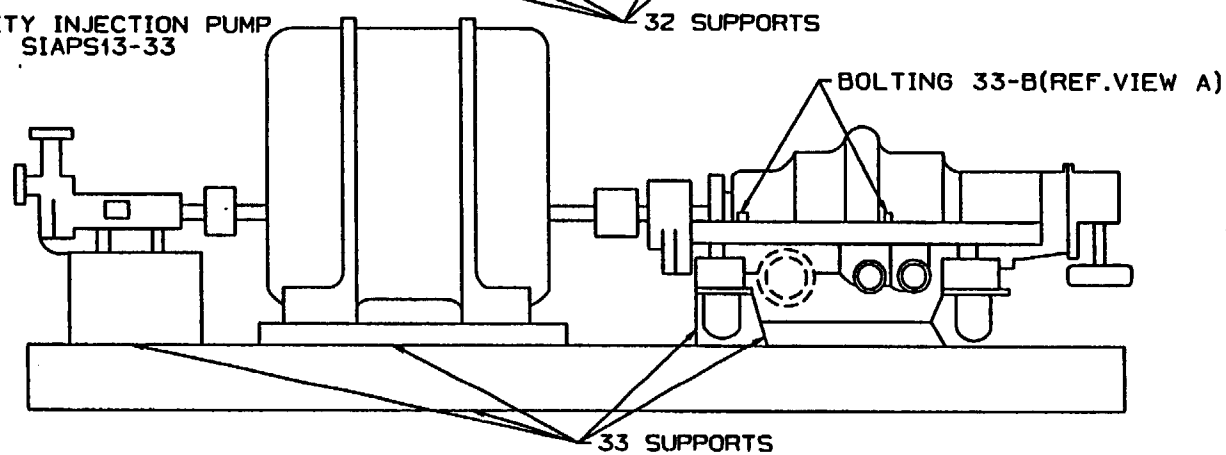

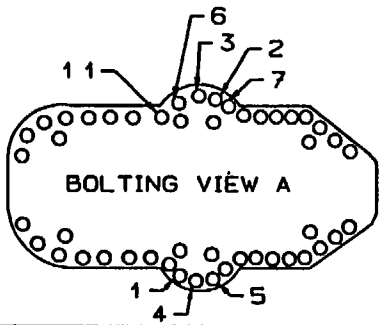

NEW YORK POWER AUTHORITY INDIAN POINT UNIT NO.3	
SAFETY INJECTION PUMPS SIAPS11-31,SIAPS12-32 & SIAPS13-33	
INT-2-3130	REV. 2

RESIDUAL HEAT EXCHANGER ACAHRS1-31

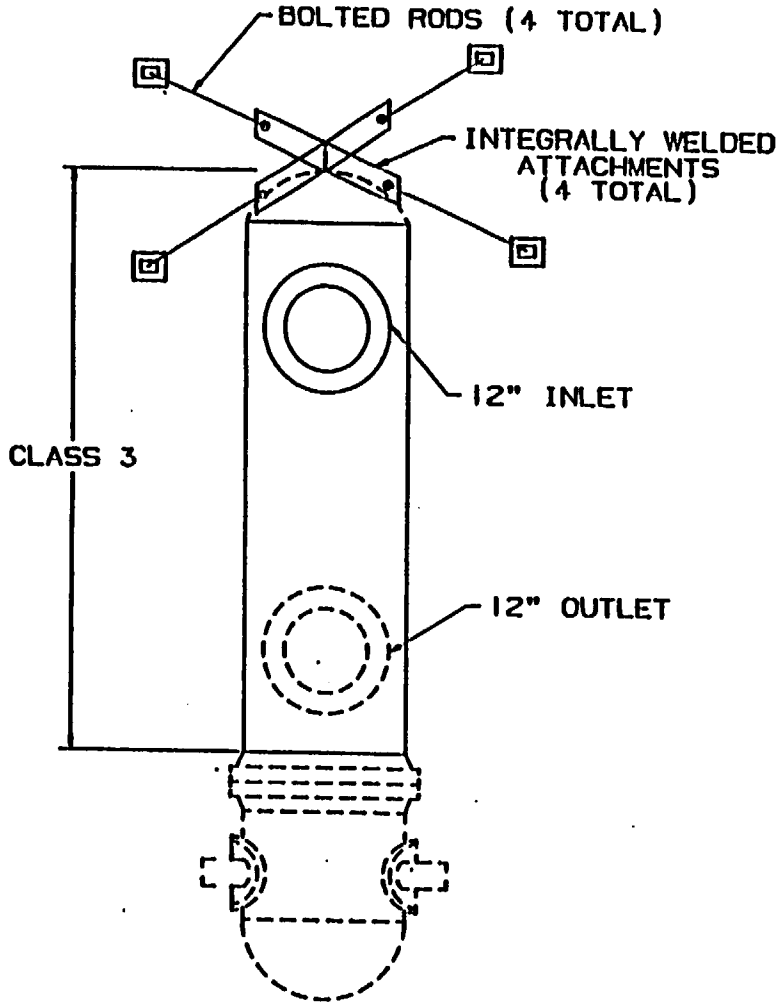

RESIDUAL HEAT EXCHANGER ACAHRS2-32

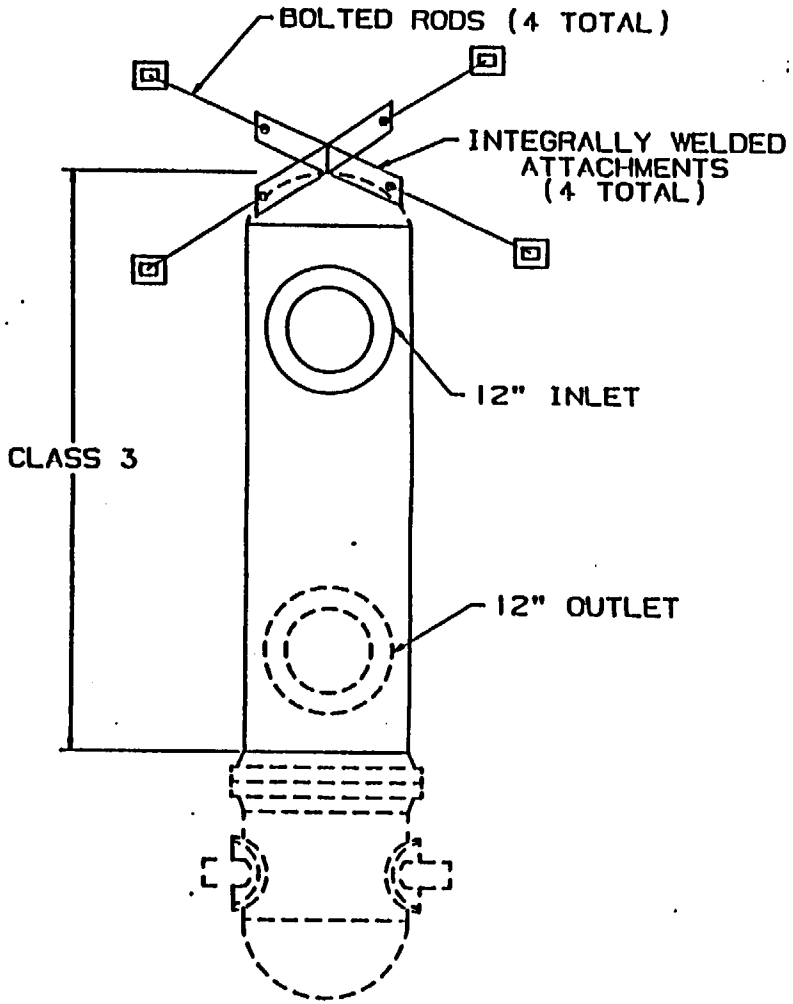

NEW YORK POWER AUTHORITY INDIAN POINT UNIT NO.3	
RESIDUAL HEAT EXCHANGER ACAHRS1-31 RESIDUAL HEAT EXCHANGER ACAHRS2-32	
INT-3-1100	REV. 1

SPENT FUEL PIT HEAT EXCHANGER ACAHSF1-31

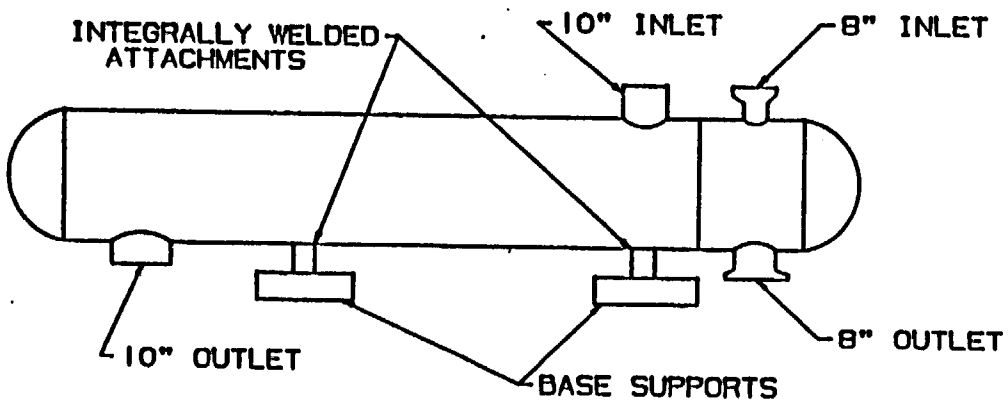

NEW YORK POWER AUTHORITY INDIAN POINT UNIT NO.3	
SPENT FUEL PIT HEAT EXCHANGER ACAHSF1-31	
INT-3-1110	REV. 1

NON REGENERATIVE LETDOWN HEAT EXCHANGER
CSAHNRT-31

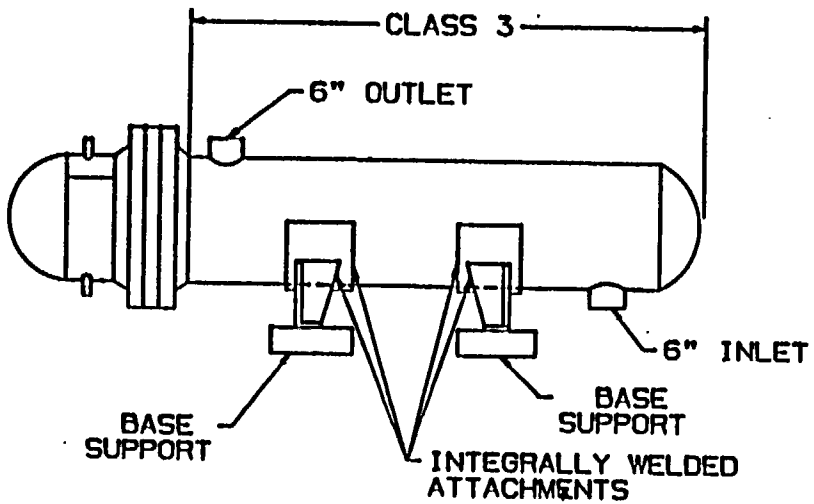

NEW YORK POWER AUTHORITY INDIAN POINT UNIT NO.3	
NON REGENERATIVE LETDOWN HEAT EXCHANGER CSAHNRT-31	
INT-3-1120	REV. 1

SEAL WATER HEAT EXCHANGER CSAHSW1-31

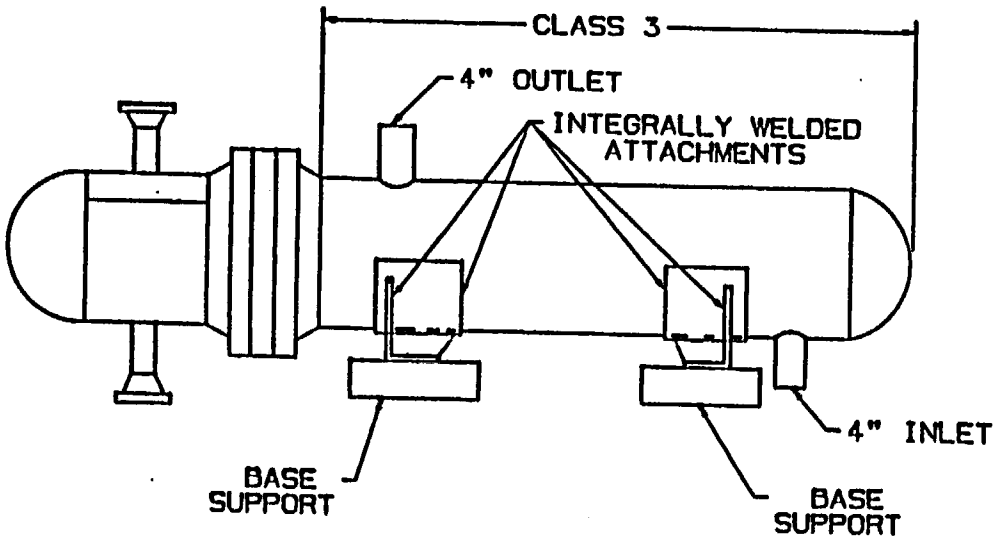

NEW YORK POWER AUTHORITY INDIAN POINT UNIT NO.3	
SEAL WATER HEAT EXCHANGER CSAHSW1-31	
INT-3-1130	REV. 1

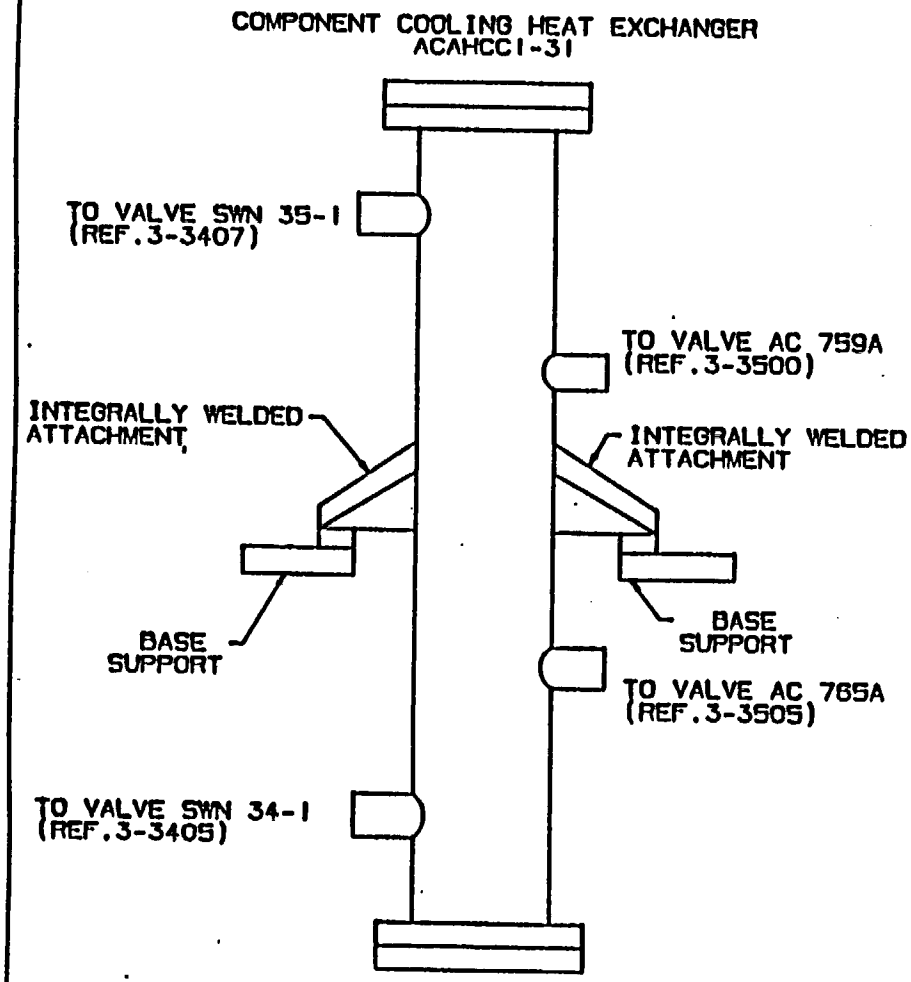

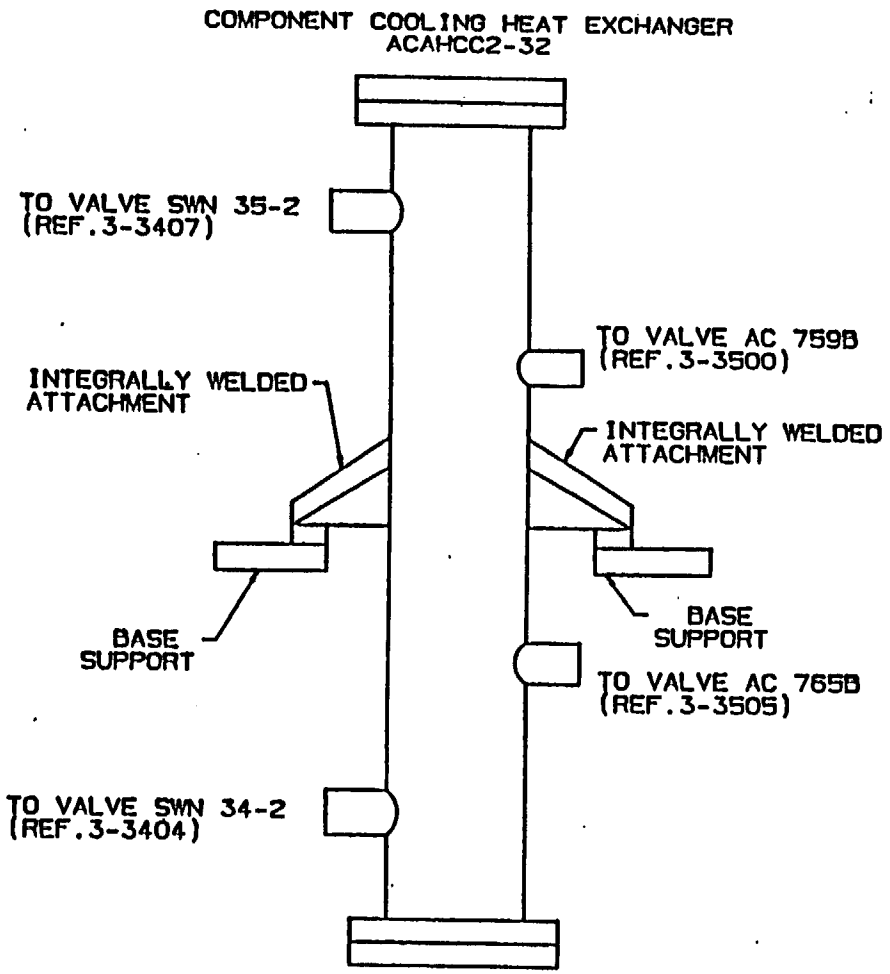

NEW YORK POWER AUTHORITY INDIAN POINT UNIT NO.3	
COMPONENT COOLING HEAT EXCHANGER ACAHCC1-31 COMPONENT COOLING HEAT EXCHANGER ACAHCC2-32	
INT-3-1140	REV. 1

EXCESS LETDOWN HEAT EXCHANGER CSAHEL1-31

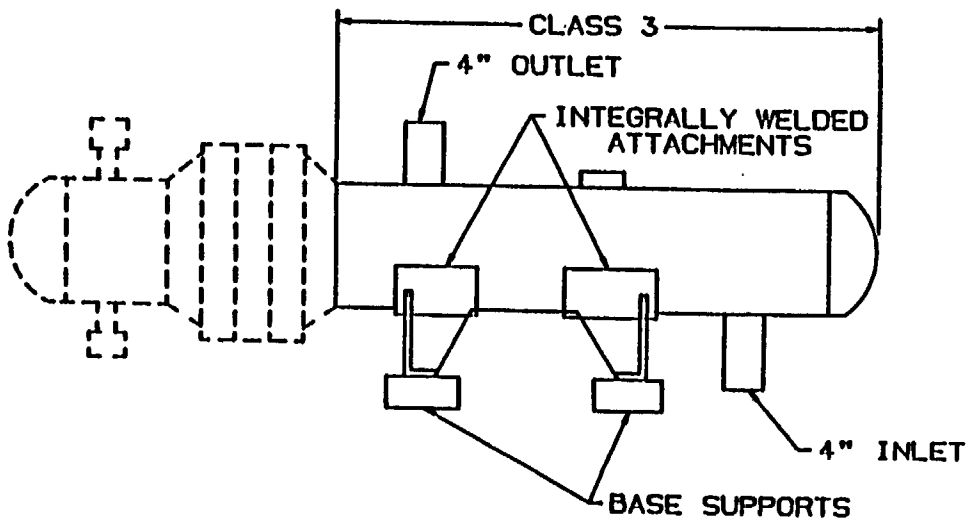

NEW YORK POWER AUTHORITY INDIAN POINT UNIT NO.3	
EXCESS LETDOWN HEAT EXCHANGER CSAHEL1-31	
INT-3-1150	REV. 1

DIESEL GENERATOR 31

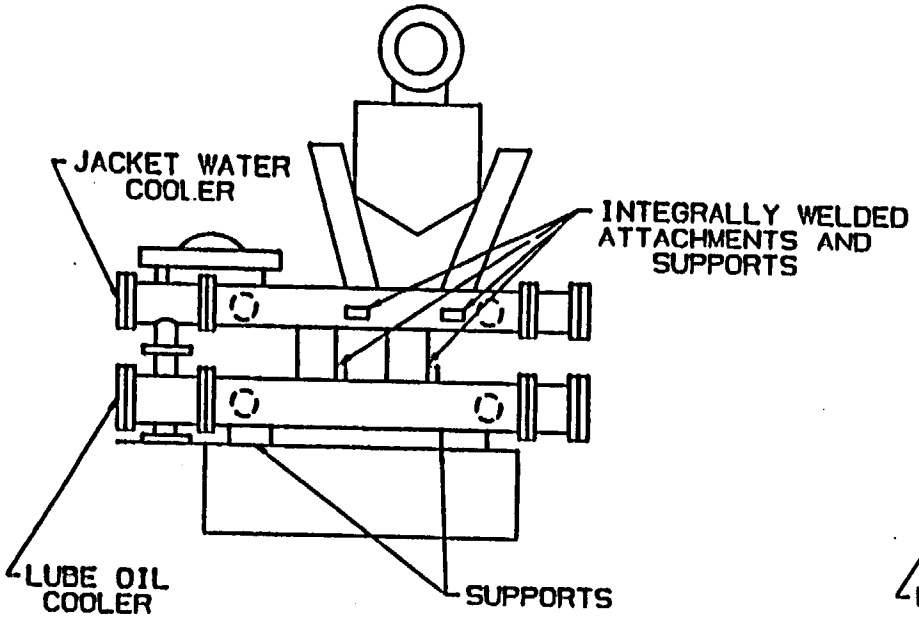

DIESEL GENERATOR 32

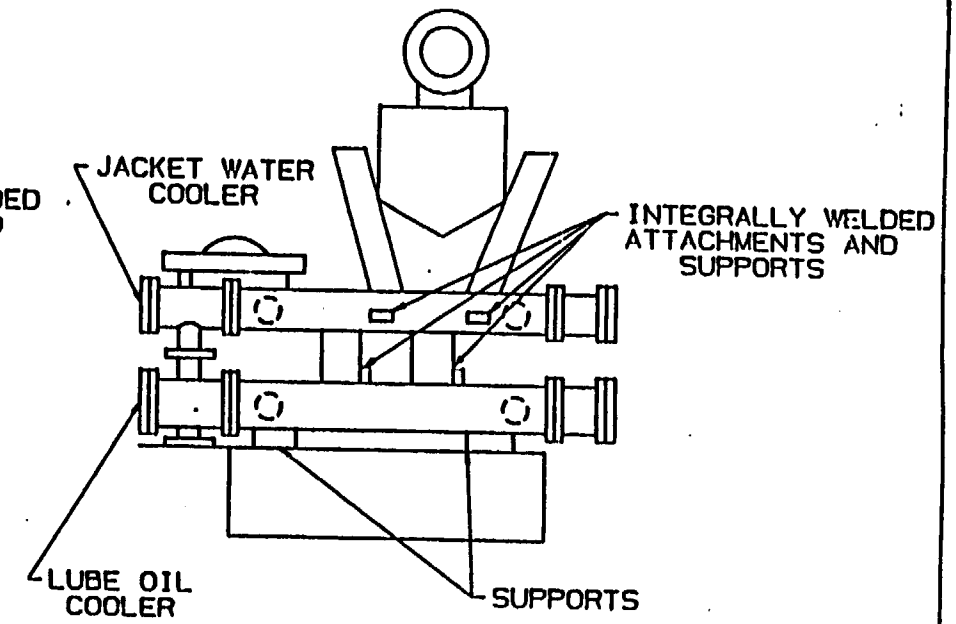

DIESEL GENERATOR 33

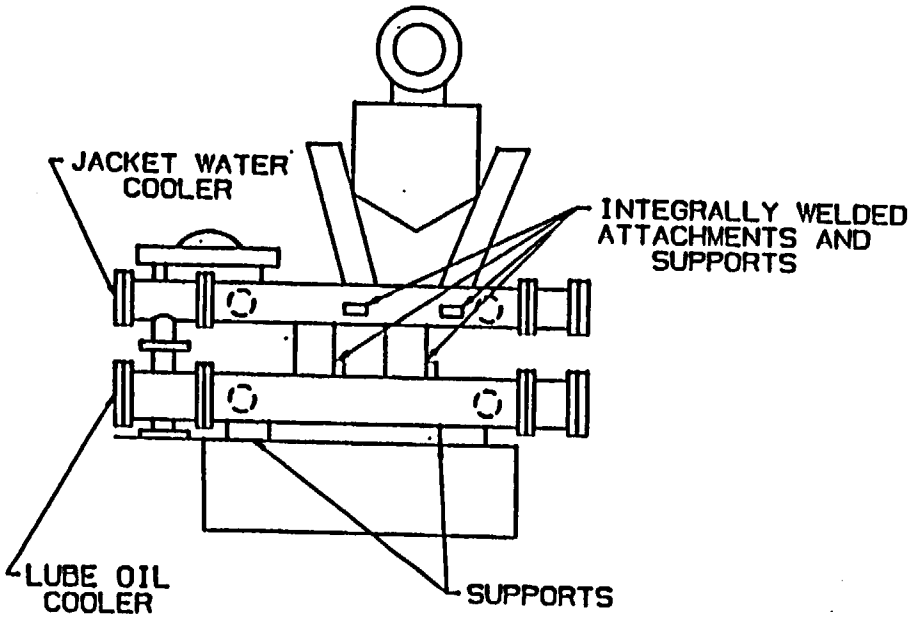

LOCATION: DIESEL GENERATOR ROOM
15' TURBINE BUILDING

NEW YORK POWER AUTHORITY INDIAN POINT UNIT NO.3	
DIESEL GENERATORS 31, 32 & 33 LUBE OIL COOLERS AND JACKET WATER COOLERS	
INT-3-1160	REV. 1

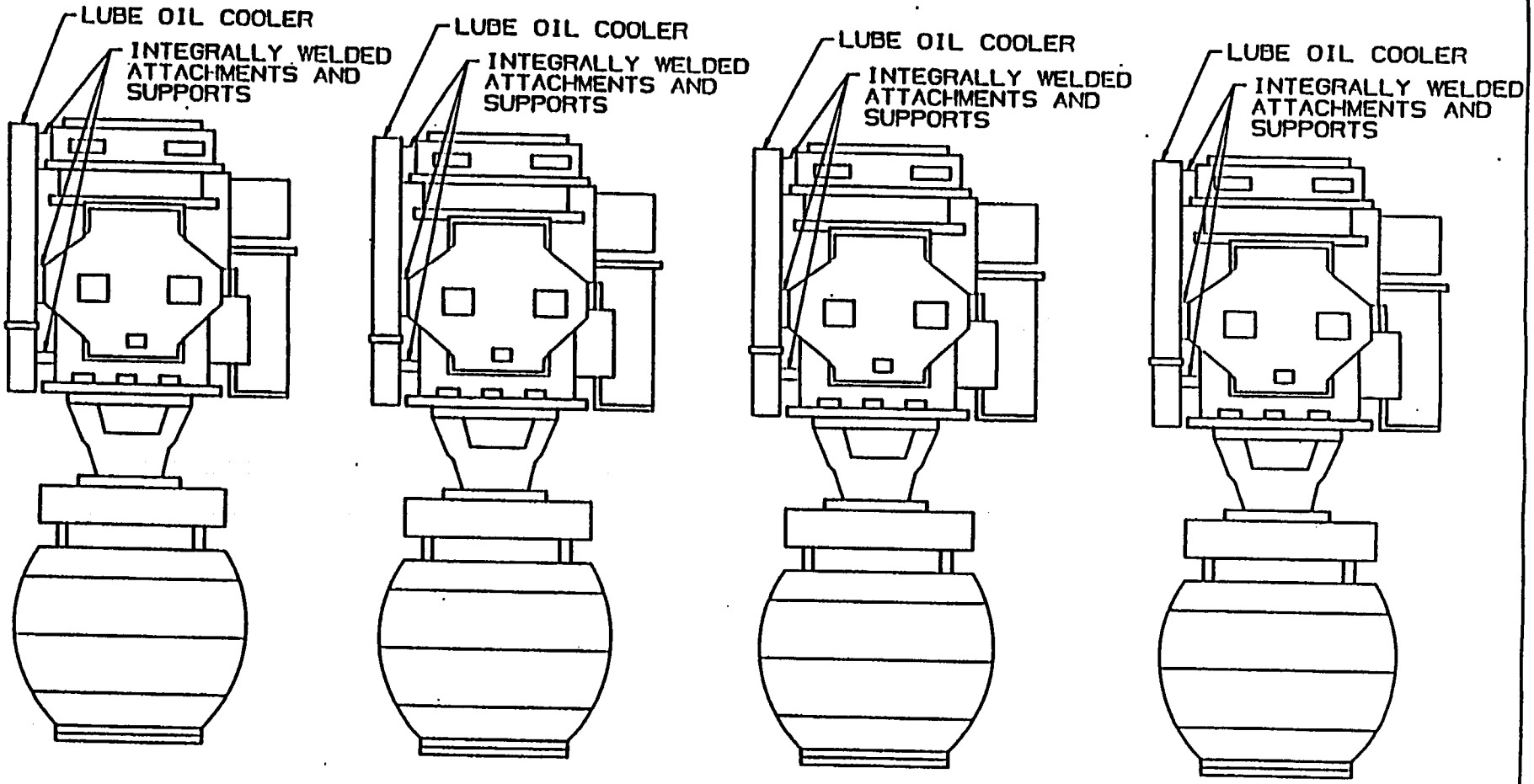

REACTOR COOLANT PUMP RCPCPC1-31

REACTOR COOLANT PUMP RCPCPC2-32

REACTOR COOLANT PUMP RCPCPC3-33

REACTOR COOLANT PUMP RCPCPC4-34

NEW YORK POWER AUTHORITY INDIAN POINT UNIT NO.3	
REACTOR COOLANT PUMPS RCPCPC1-31, RCPCPC2-32, RCPCPC3-33 & RCPCPC4-34 LUBE OIL COOLERS	
INT-3-1170	REV. 2

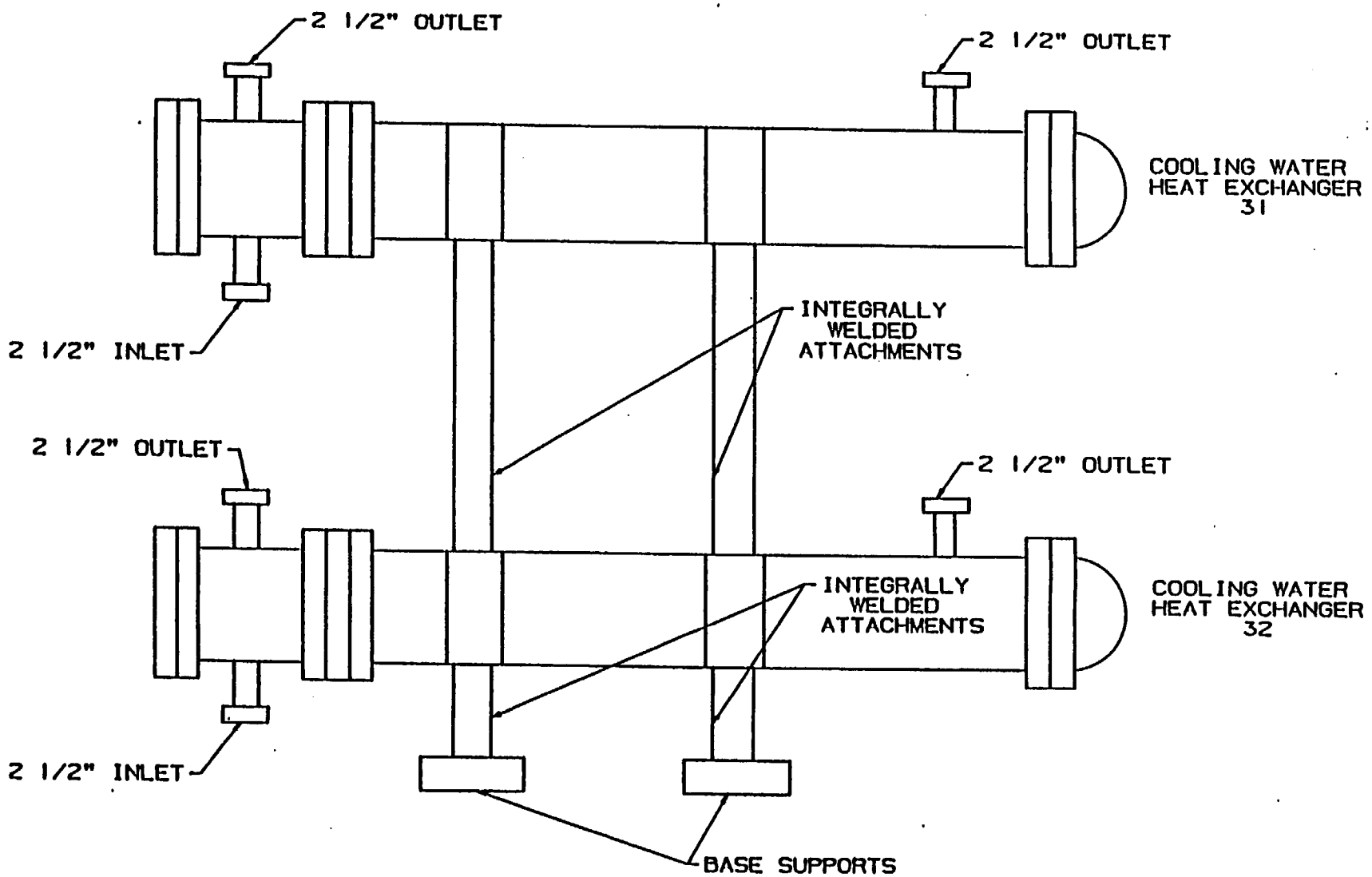

LOCATION: 1ST DOOR TO DIESEL GENERATOR ROOMS
TAG IDENTITY: 31 INSTRUMENT AIR CLOSED COOLING HEAT EXCHANGER
32 INSTRUMENT AIR CLOSED COOLING HEAT EXCHANGER

NEW YORK POWER AUTHORITY INDIAN POINT UNIT NO.3	
COOLIING WATER HEAT EXCHANGERS 31 & 32	
INT-3-1180	REV. 1

RESIDUAL HEAT REMOVAL PUMP
ACAPRH1-31

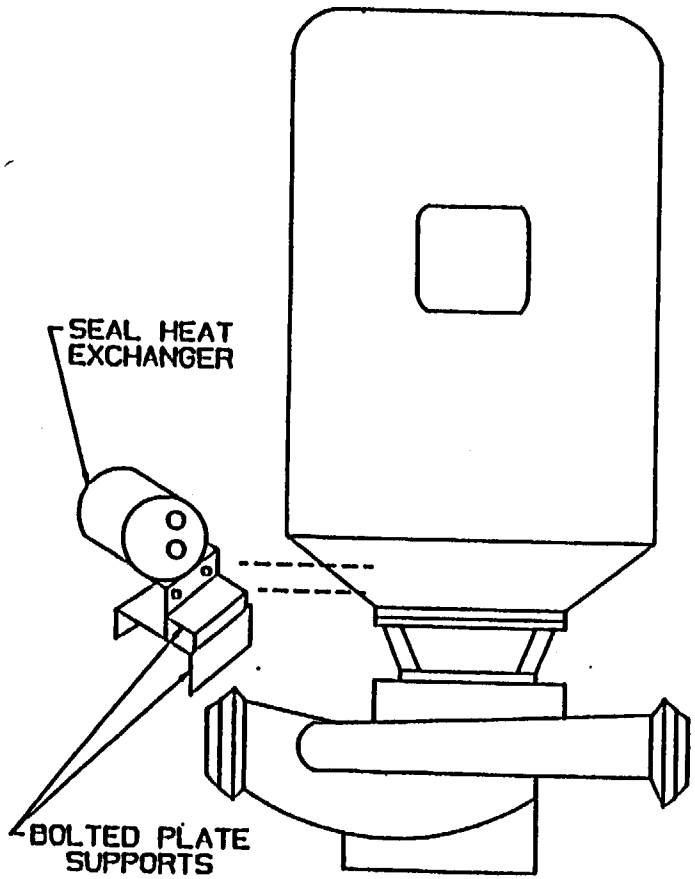

RESIDUAL HEAT REMOVAL PUMP
ACAPRH2-32

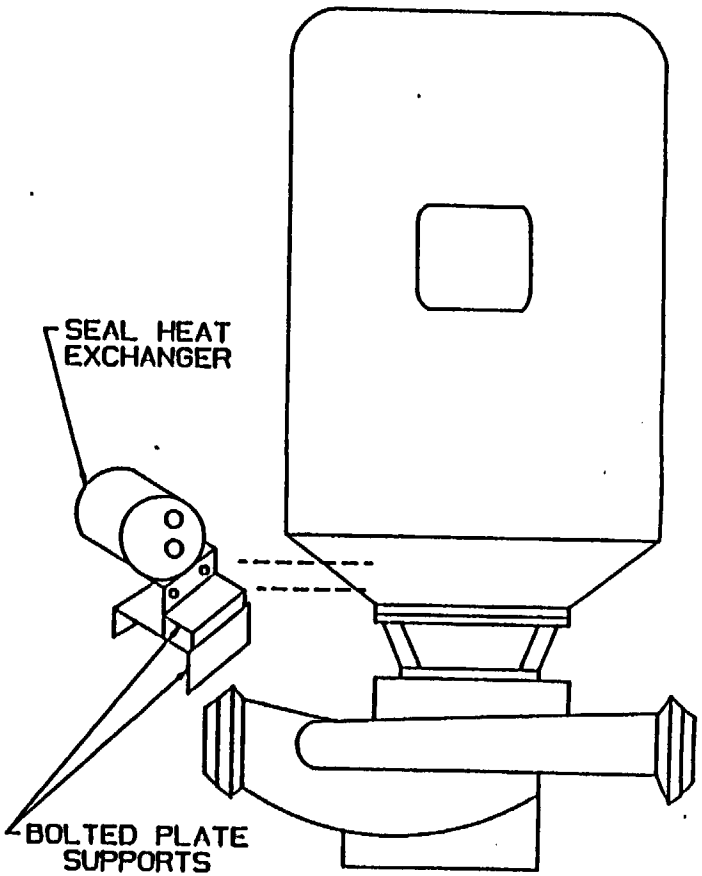

NEW YORK POWER AUTHORITY INDIAN POINT UNIT NO.3	
RESIDUAL HEAT REMOVAL PUMPS ACAPRH1-31 & ACAPRH2-32 SEAL HEAT EXCHANGERS	
INT-3-1190	REV. 1

BORIC ACID TANK CSATBA1-31

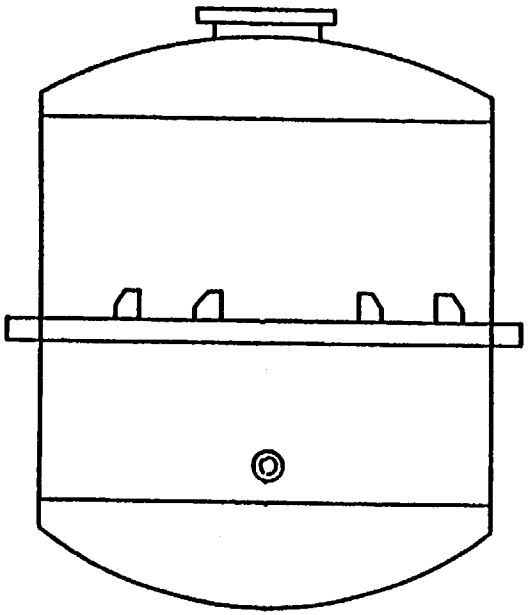

BORIC ACID TANK CSATBA2-32

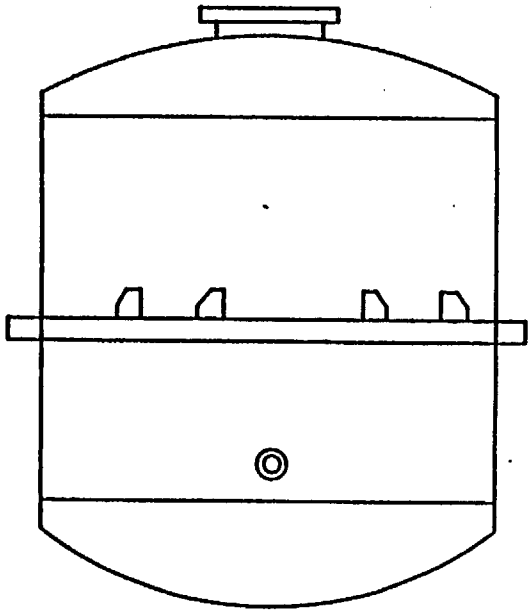

NEW YORK POWER AUTHORITY INDIAN POINT UNIT NO.3	
BORIC ACID TANKS CSATBA1-31 & CSATBA2-32	
INT-3-1200	REV. 0

COMPONENT COOLING SURGE TANK ACATCC1-31

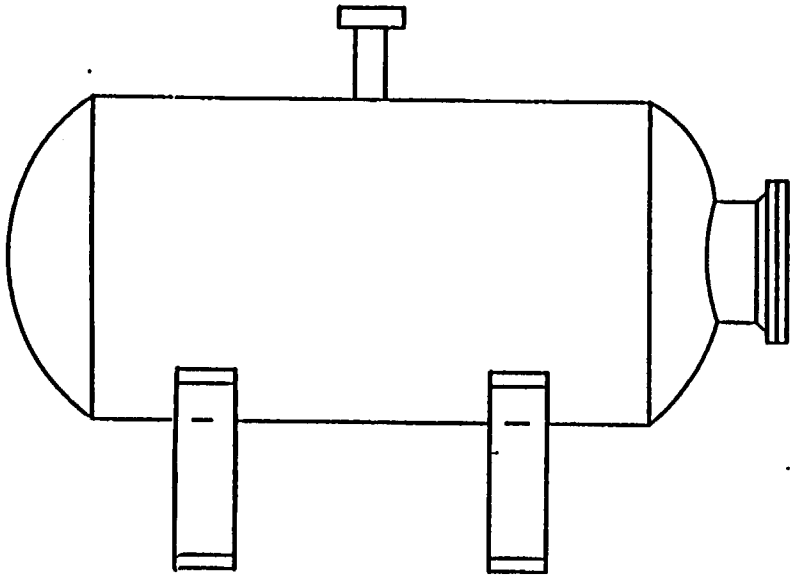

COMPONENT COOLING SURGE TANK ACATCC2-32

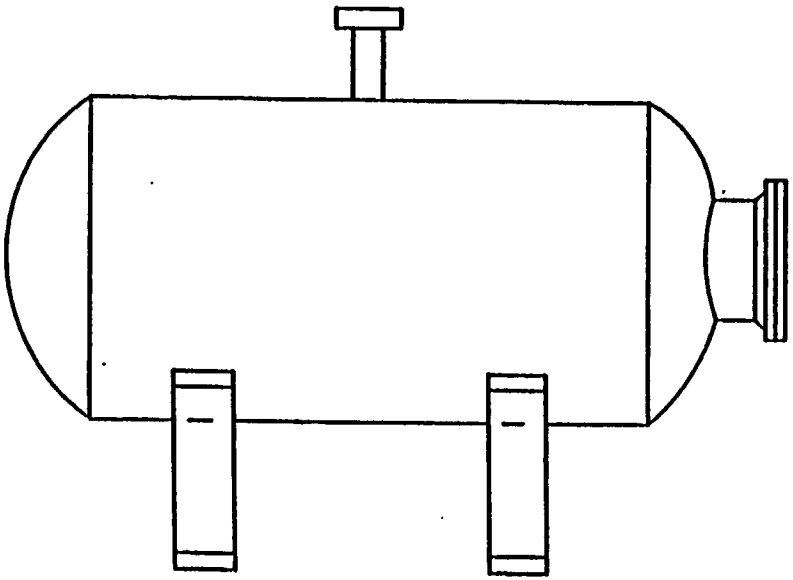

NEW YORK POWER AUTHORITY INDIAN POINT UNIT NO.3	
COMPONENT COOLING SURGE TANKS ACATCC1-31 & ACATCC2-32	
INT-3-1210	REV. 0

SPRAY ADDITIVE TANK SIATSA1-31

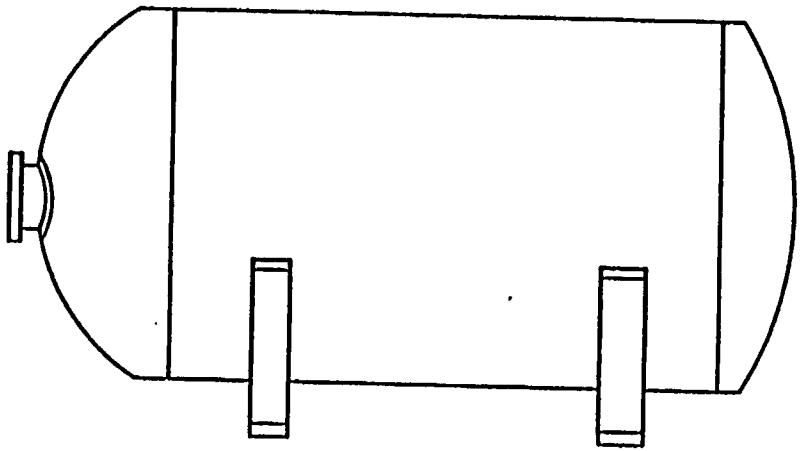

NEW YORK POWER AUTHORITY INDIAN POINT UNIT NO.3	
SPRAY ADDITIVE TANK SIATSA1-31	
INT-3-1220	REV. 0

CONDENSATE STORAGE TANK

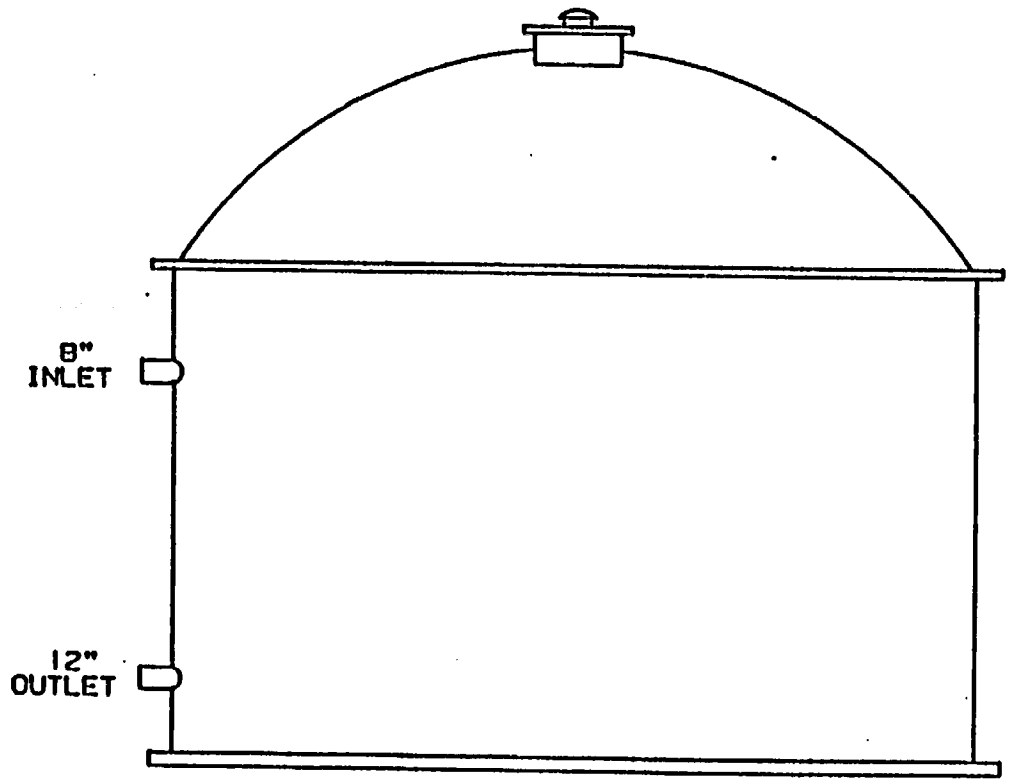

NEW YORK POWER AUTHORITY INDIAN POINT UNIT NO.3	
CONDENSATE STORAGE TANK	
INT-3-1230	REV. 0

BORIC ACID FILTER CSFLBA1-31

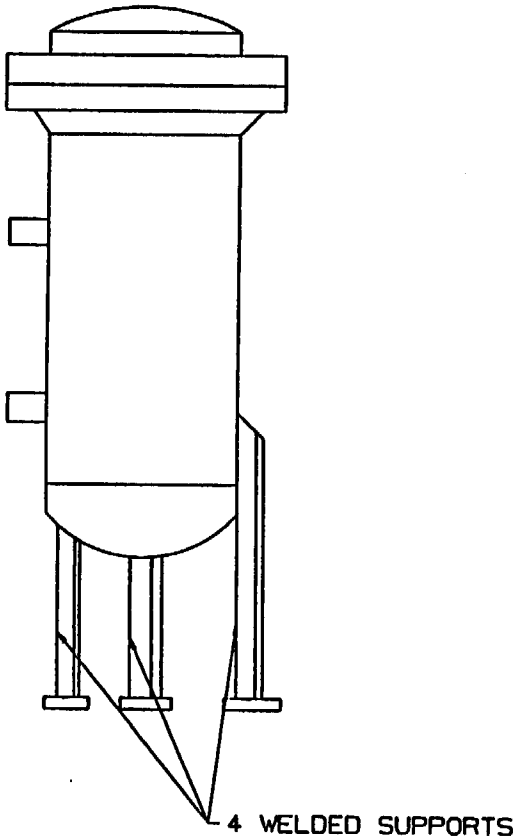

BORIC ACID BLENDER CSBLBA1*

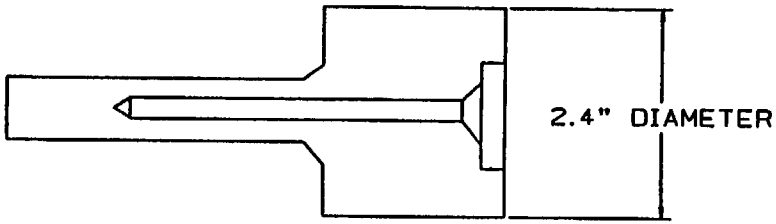

* LESS THAN 4" DIAMETER (SUPPORTS IF APPLICABLE NOT REQUIRED FOR EXAMINATION)

NEW YORK POWER AUTHORITY INDIAN POINT UNIT NO.3	
BORIC ACID FILTER CSFLBA1-31 & BORIC ACID BLENDER CSBLBA1	
INT-3-1300	REV. 1

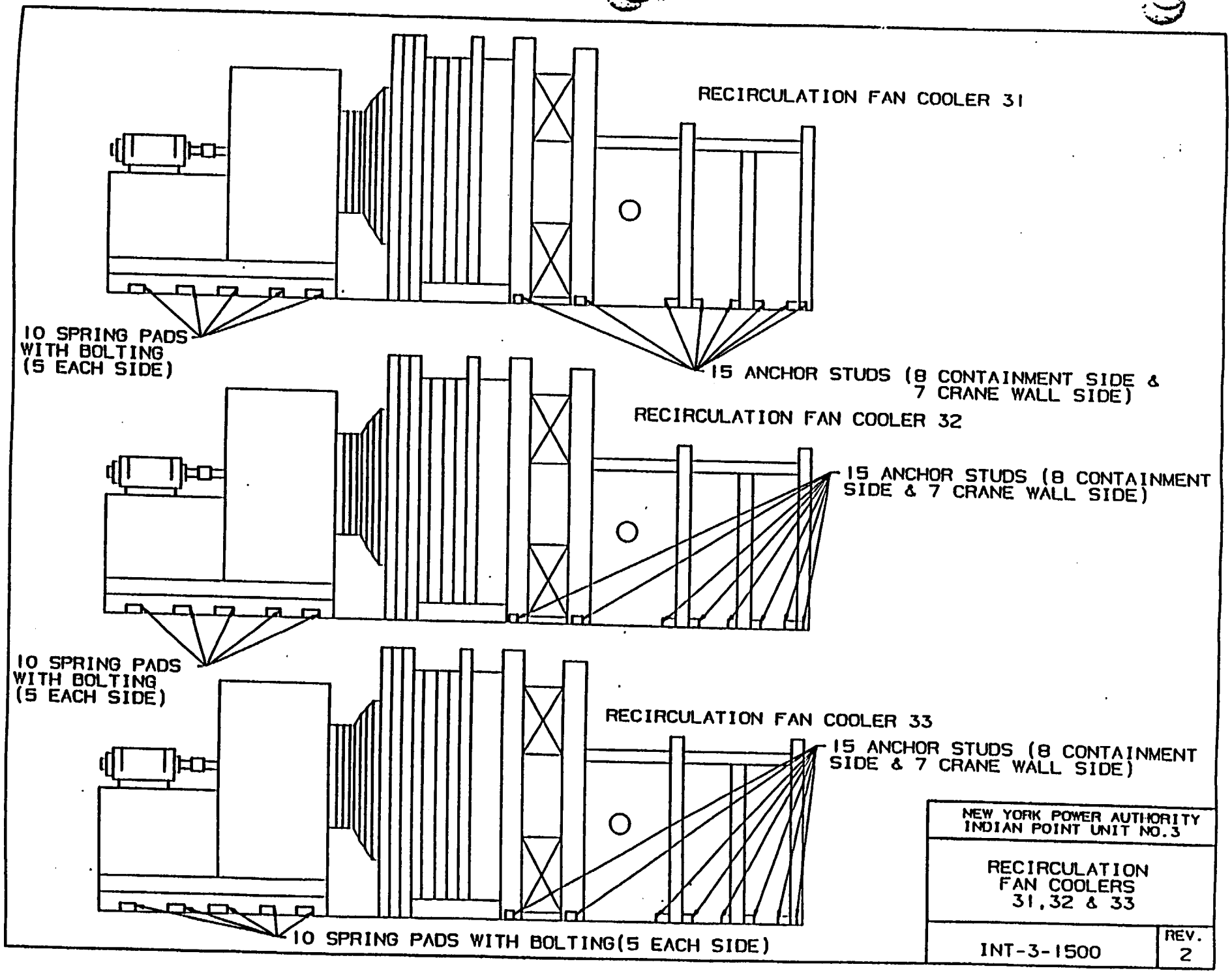
RECIRCULATION FAN COOLER 31
10 SPRING PADS WITH BOLTING (5 EACH SIDE)
15 ANCHOR STUDS (8 CONTAINMENT SIDE & 7 CRANE WALL SIDE)
RECIRCULATION FAN COOLER 32
15 ANCHOR STUDS (8 CONTAINMENT SIDE & 7 CRANE WALL SIDE)
10 SPRING PADS WITH BOLTING (5 EACH SIDE)
RECIRCULATION FAN COOLER 33
15 ANCHOR STUDS (8 CONTAINMENT SIDE & 7 CRANE WALL SIDE)
10 SPRING PADS WITH BOLTING(5 EACH SIDE)
NEW YORK POWER AUTHORITY
INDIAN POINT UNIT NO.3
RECIRCULATION FAN COOLERS 31,32 & 33
INT-3-1500
REV. 2

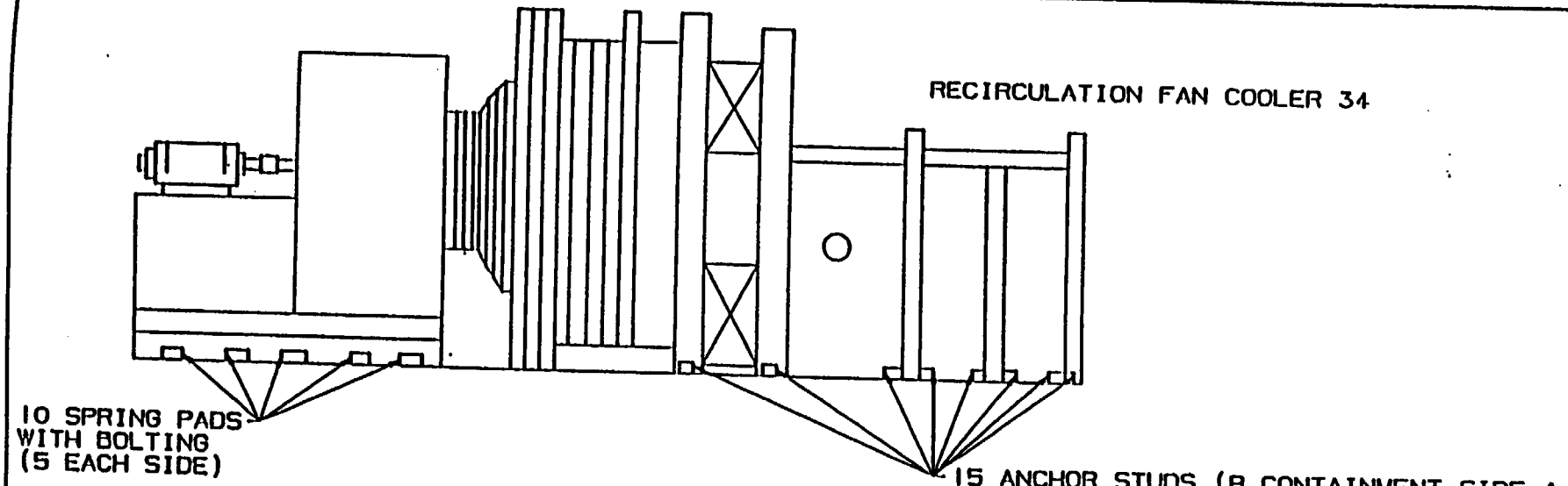

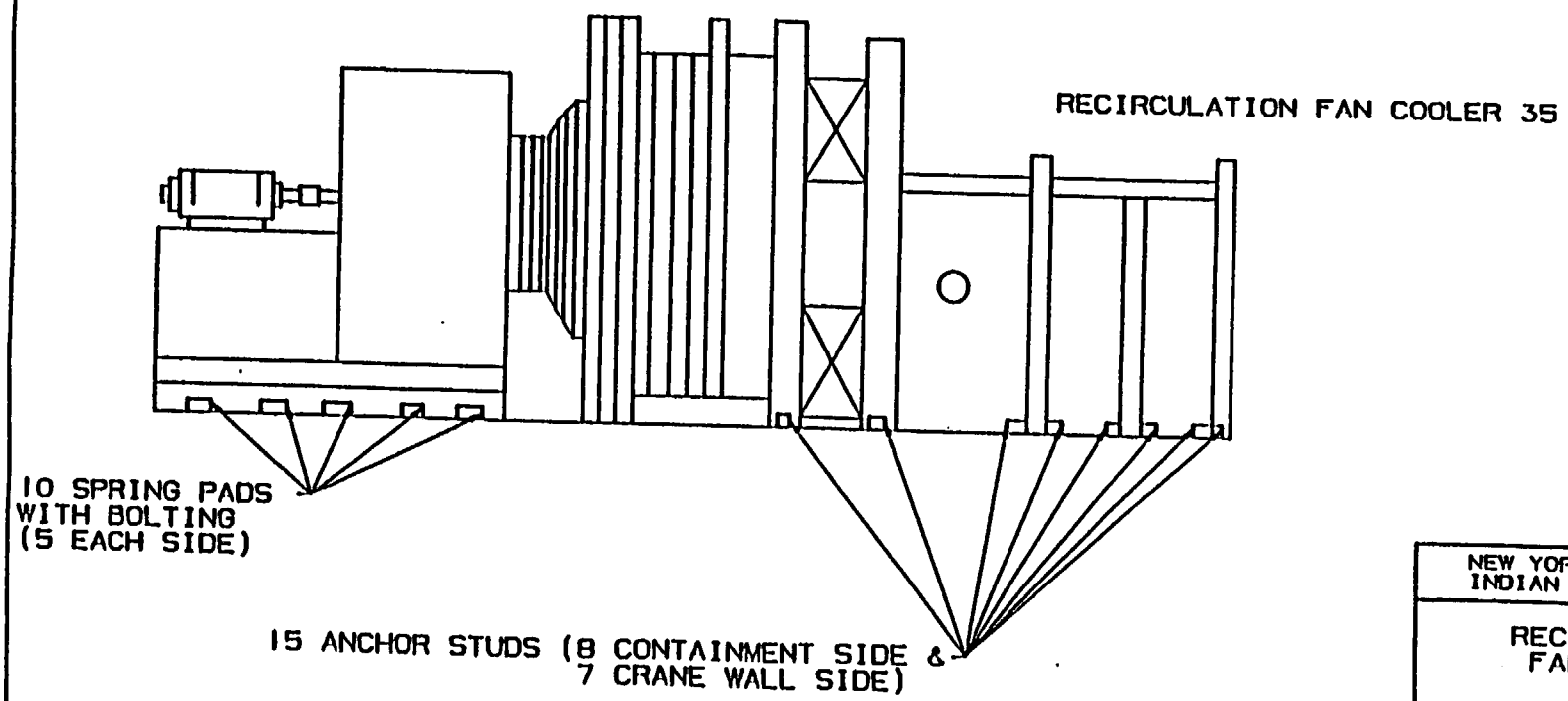

NEW YORK POWER AUTHORITY INDIAN POINT UNIT NO.3	
RECIRCULATION FAN COOLERS 34 & 35	
INT-3-1510	REV. 2

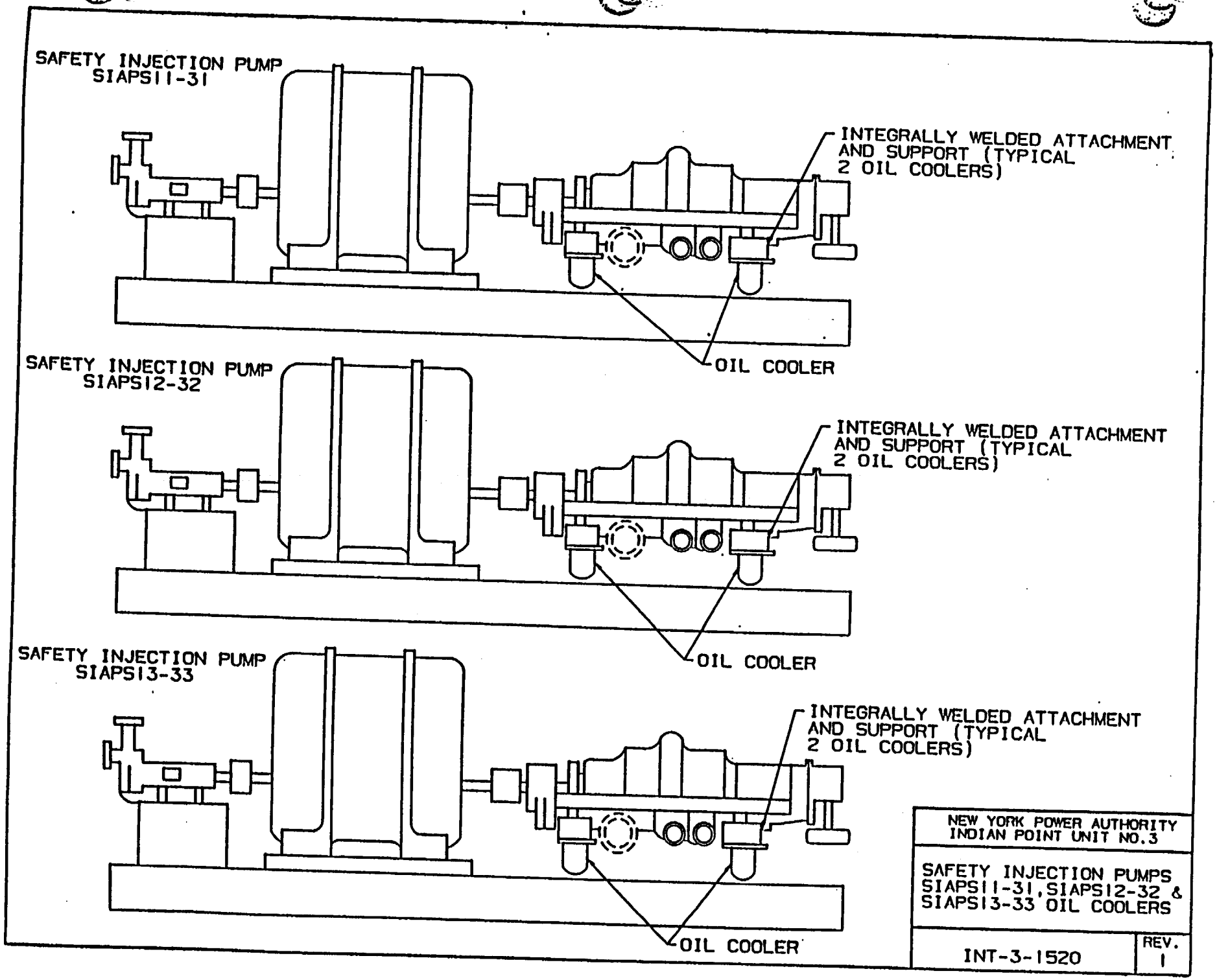
SAFETY INJECTION PUMP
SIAPS11-31
INTEGRALLY WELDED ATTACHMENT
AND SUPPORT (TYPICAL
2 OIL COOLERS)
OIL COOLER
SAFETY INJECTION PUMP
SIAPS12-32
INTEGRALLY WELDED ATTACHMENT
AND SUPPORT (TYPICAL
2 OIL COOLERS)
OIL COOLER
SAFETY INJECTION PUMP
SIAPS13-33
INTEGRALLY WELDED ATTACHMENT
AND SUPPORT (TYPICAL
2 OIL COOLERS)
OIL COOLER
NEW YORK POWER AUTHORITY
INDIAN POINT UNIT NO.3
SAFETY INJECTION PUMPS
SIAPS11-31, SIAPS12-32 &
SIAPS13-33 OIL COOLERS
INT-3-1520
REV.
1

CHARGING PUMP CSAPCH1-31

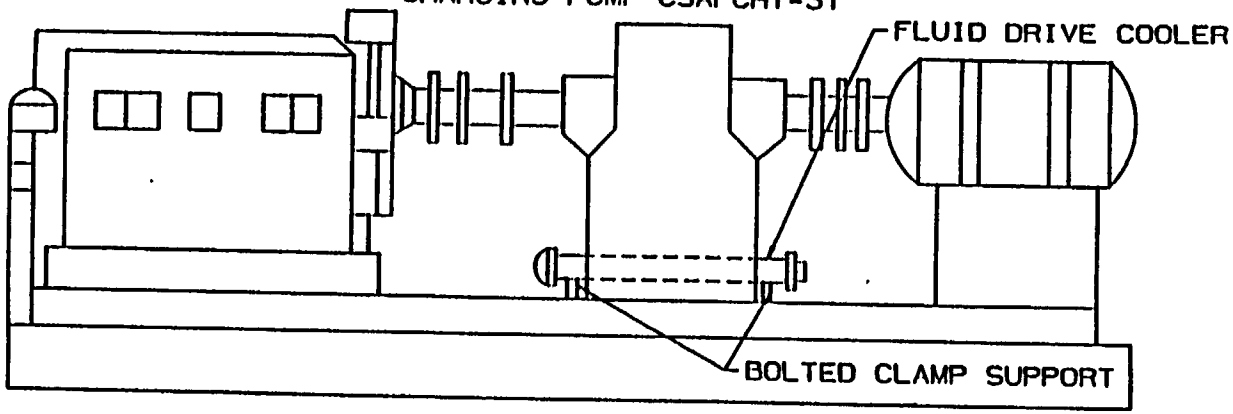

CHARGING PUMP CSAPCH2-32

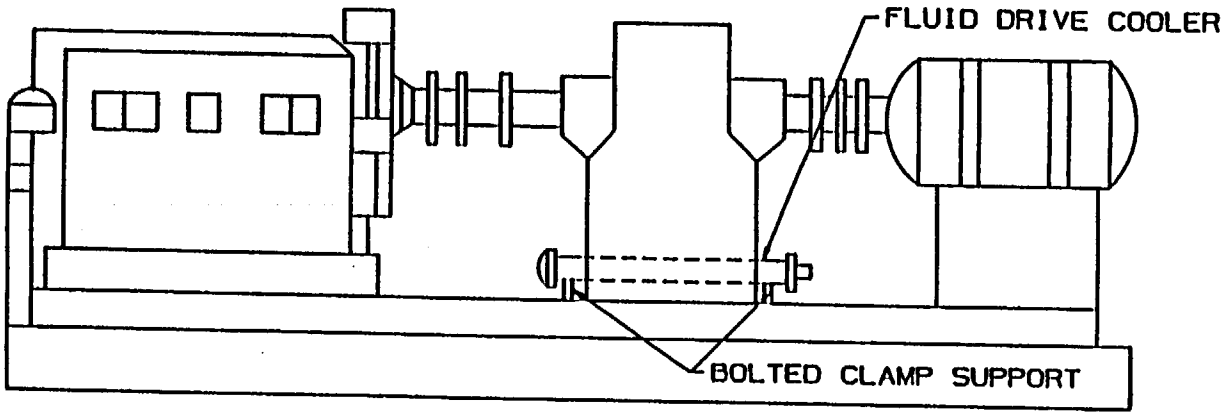

CHARGING PUMP CSAPCH3-33

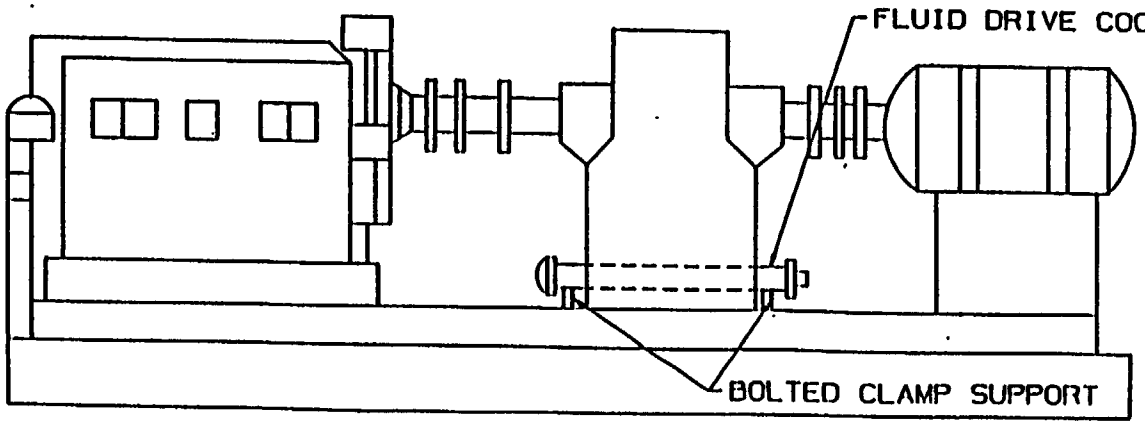

NOTE: EACH BOLTED CLAMP HAS 4 BOLTS: 2 INTO BASE AND 2 INTO FLUID DRIVE COOLER

NEW YORK POWER AUTHORITY INDIAN POINT UNIT NO.3	
CHARGING PUMPS CSAPCH1-31, CSAPCH2-32 & CSAPCH3-33 FLUID DRIVE COOLERS	
INT-3-1530	REV. 1

RECIRCULATION SPRAY PUMP 31

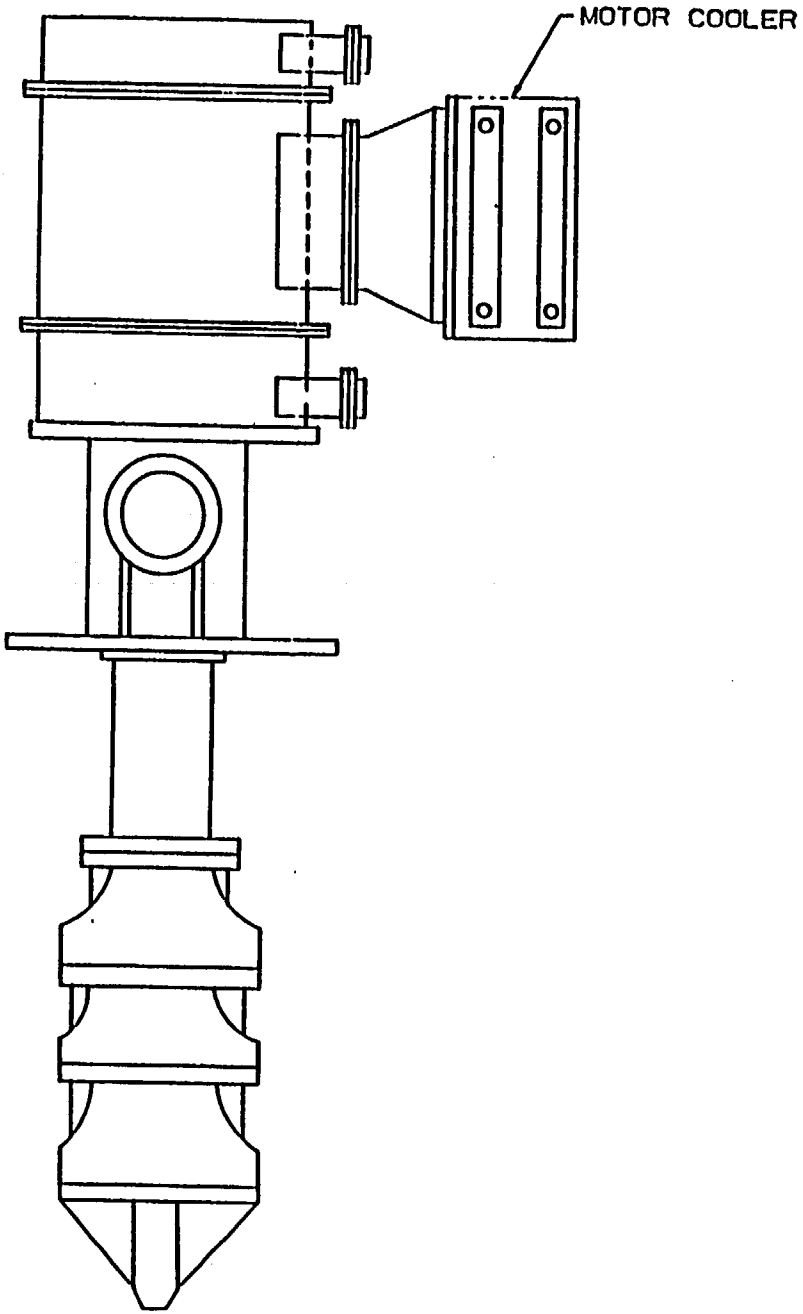

RECIRCULATION SPRAY PUMP 32

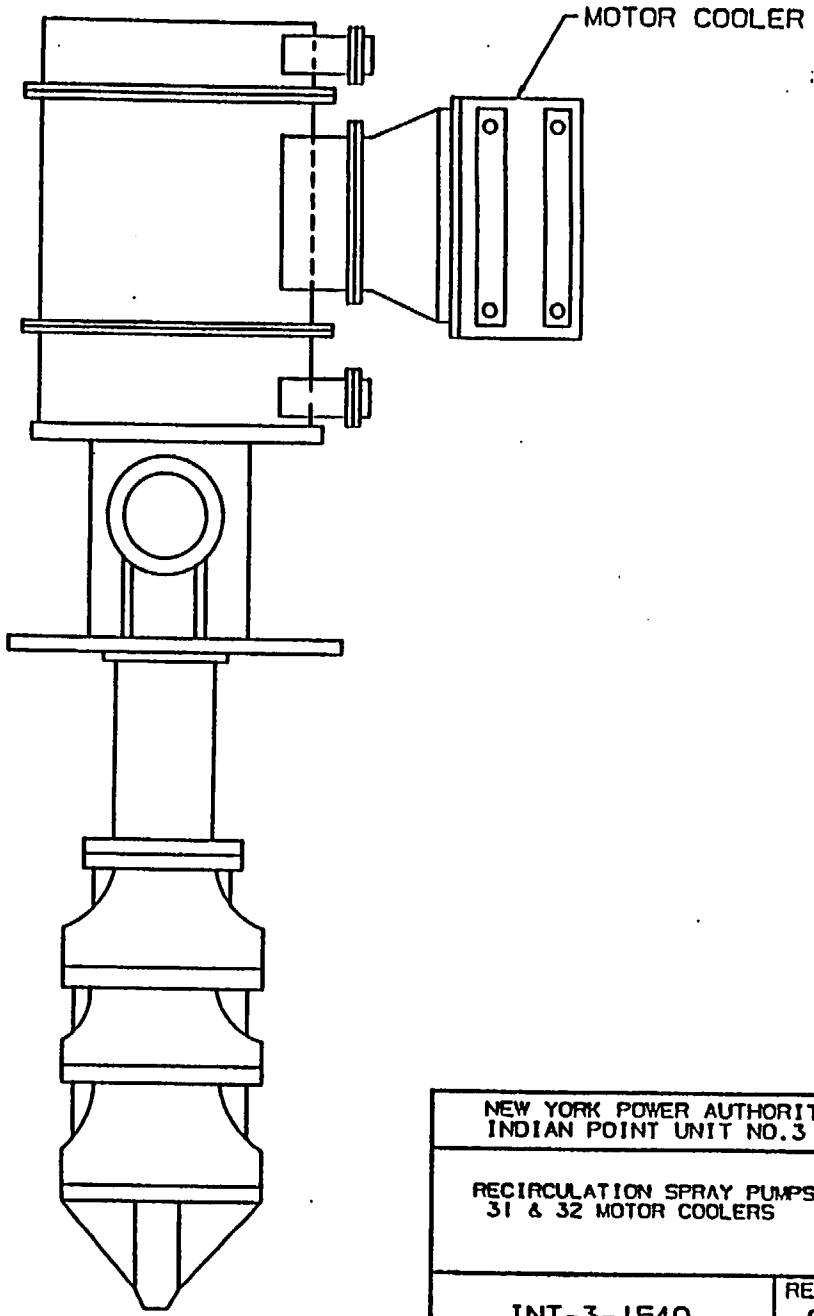

NEW YORK POWER AUTHORITY INDIAN POINT UNIT NO.3	
RECIRCULATION SPRAY PUMPS 31 & 32 MOTOR COOLERS	
INT-3-1540	REV. 0

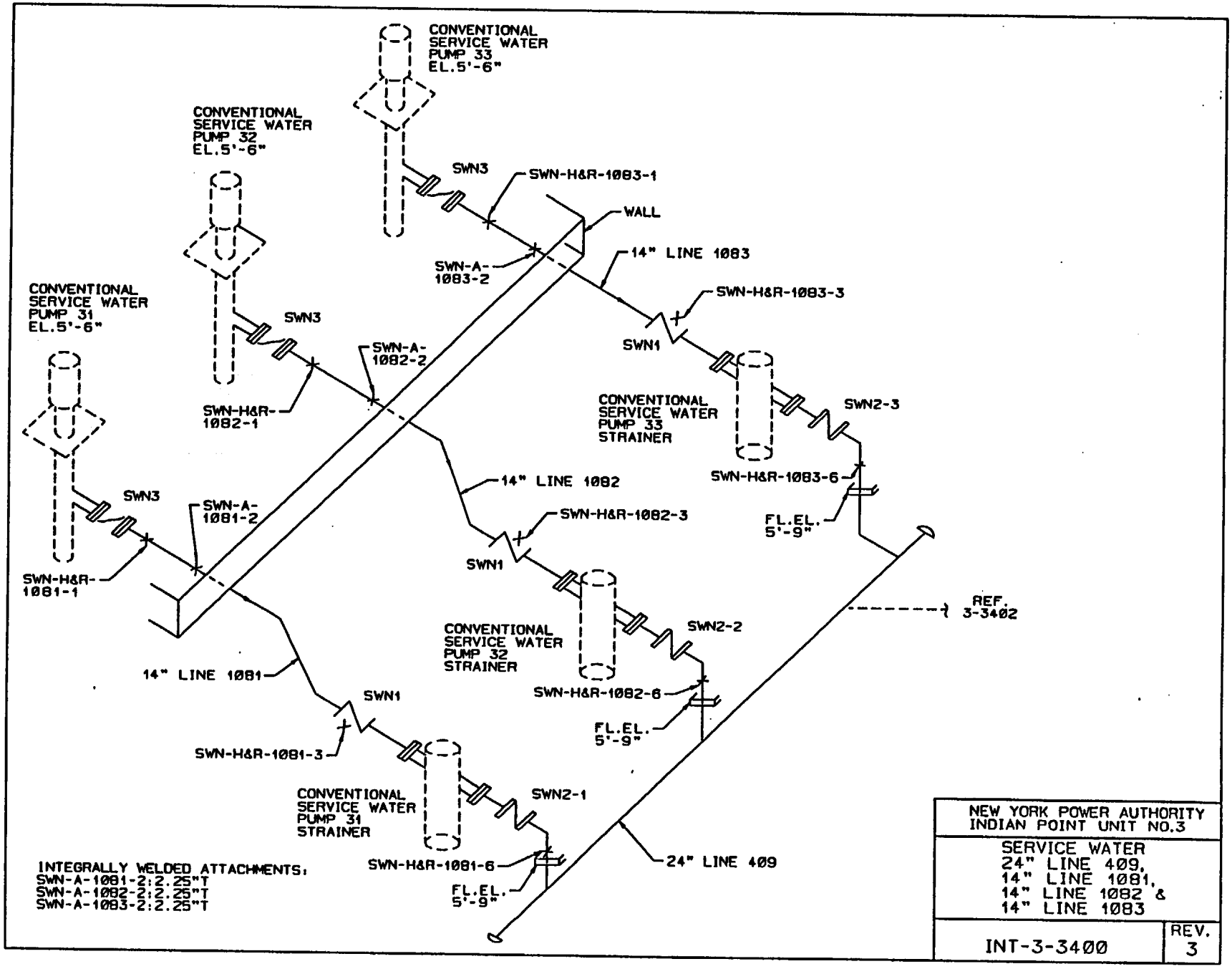
CONVENTIONAL SERVICE WATER PUMP 33 EL.5'-6"
CONVENTIONAL SERVICE WATER PUMP 32 EL.5'-6"
CONVENTIONAL SERVICE WATER PUMP 31 EL.5'-6"
SWN3
SWN-H&R-1083-1
WALL
SWN-A-1083-2
14" LINE 1083
SWN-H&R-1083-3
SWN1
SWN-A-1082-2
SWN-H&R-1082-1
CONVENTIONAL SERVICE WATER PUMP 33 STRAINER
SWN2-3
SWN-H&R-1083-6
FL.EL. 5'-9"
14" LINE 1082
SWN-H&R-1082-3
SWN-A-1081-2
SWN-H&R-1081-1
REF. 3-3402
CONVENTIONAL SERVICE WATER PUMP 32 STRAINER
SWN2-2
SWN-H&R-1082-6
14" LINE 1081
SWN-H&R-1081-3
CONVENTIONAL SERVICE WATER PUMP 31 STRAINER
SWN2-1
SWN-H&R-1081-6
24" LINE 409
INTEGRALLY WELDED ATTACHMENTS:
SWN-A-1081-2:2.25"T
SWN-A-1082-2:2.25"T
SWN-A-1083-2:2.25"T
NEW YORK POWER AUTHORITY
INDIAN POINT UNIT NO.3
SERVICE WATER
24" LINE 409,
14" LINE 1081,
14" LINE 1082 &
14" LINE 1083
INT-3-3400
REV. 3

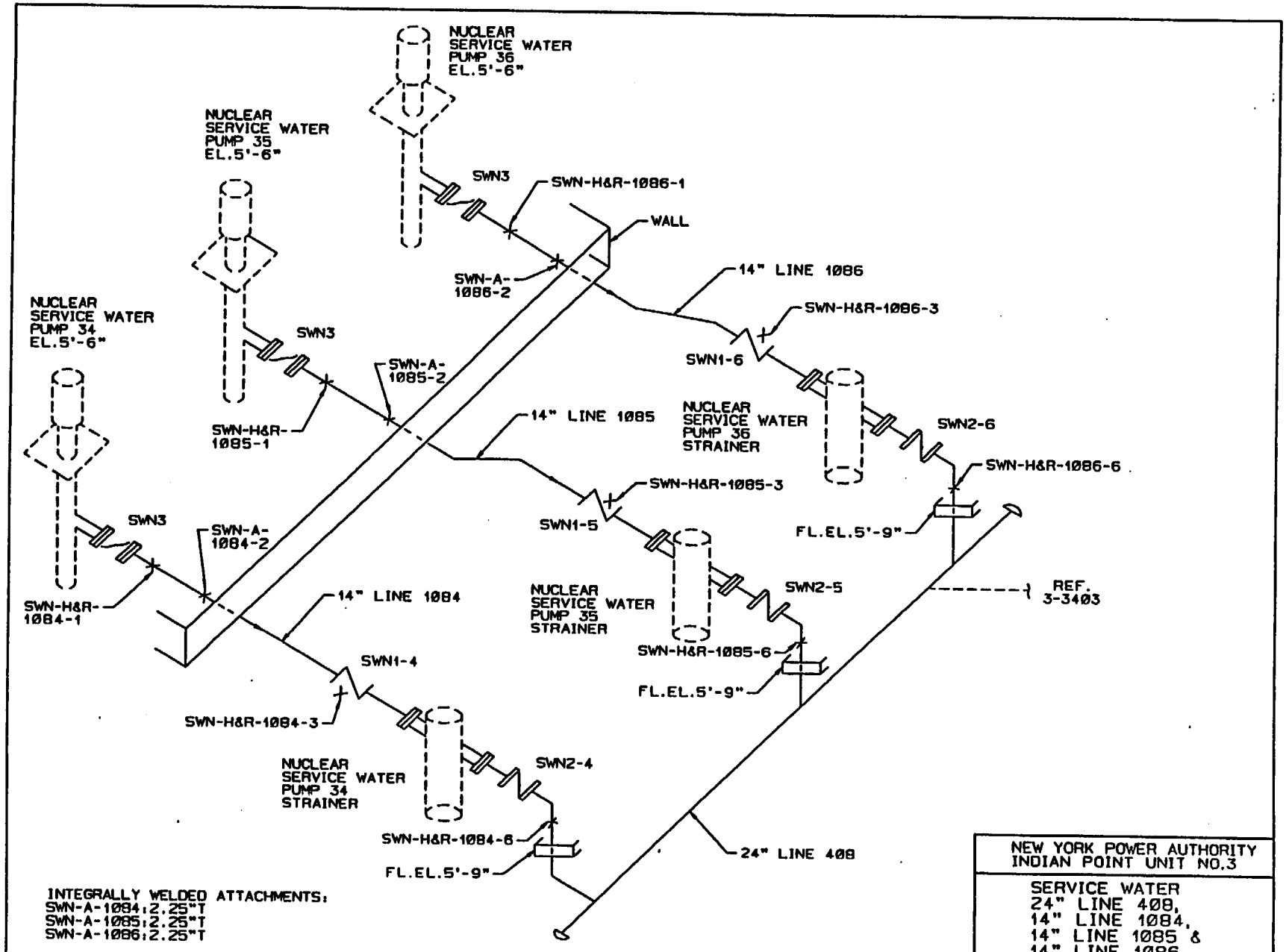

NEW YORK POWER AUTHORITY INDIAN POINT UNIT NO.3	
SERVICE WATER 24" LINE 408, 14" LINE 1084, 14" LINE 1085 & 14" LINE 1086	
INT-3-3401	REV. 2

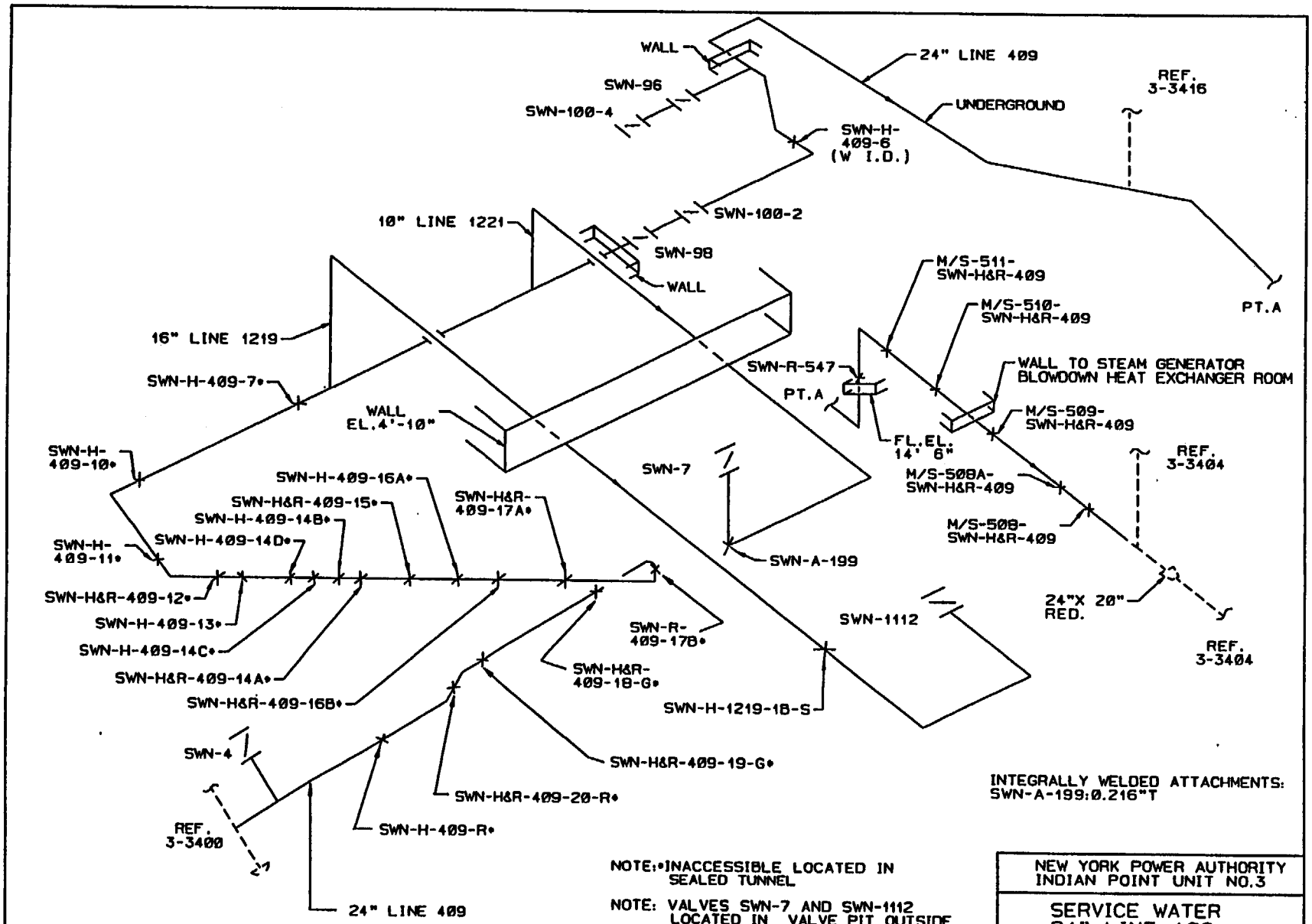

INTEGRALLY WELDED ATTACHMENTS:
SWN-A-199:0.216"T

NOTE:•INACCESSIBLE LOCATED IN SEALED TUNNEL

NOTE: VALVES SWN-7 AND SWN-1112 LOCATED IN VALVE PIT OUTSIDE IN FRONT OF TURBINE BUILDING.

NOTE: VALVES SWN-96,SWN-98,SWN-100-2 AND SWN-100-4 LOCATED IN VALVE PIT OUTSIDE ON SIDE OF TURBINE BIULDING

NEW YORK POWER AUTHORITY INDIAN POINT UNIT NO.3	
SERVICE WATER 24" LINE 409, 16" LINE 1219 & 10" LINE 1221	
INT-3-3402	REV. 3

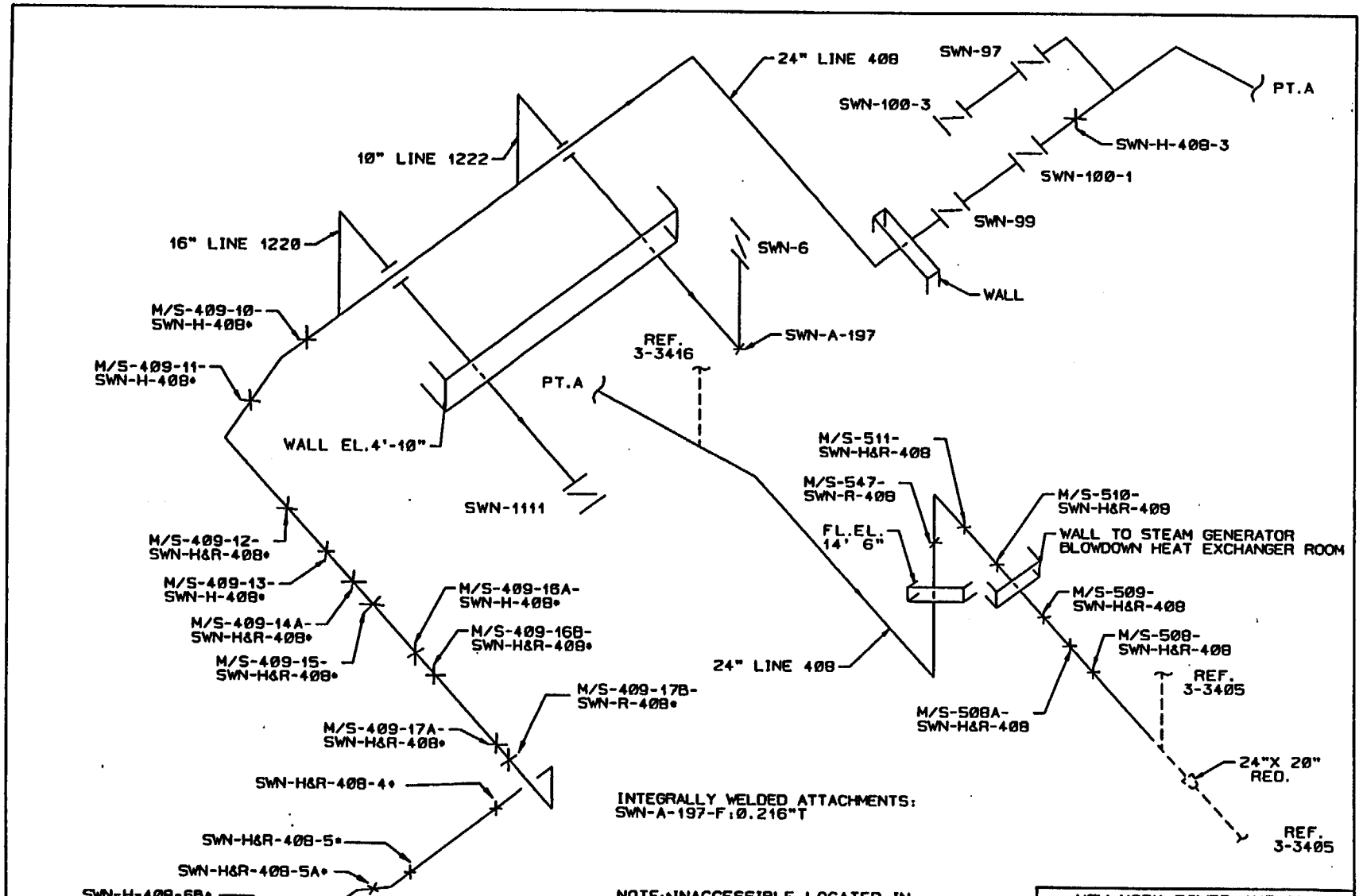

NOTE:*INACCESSIBLE LOCATED IN SEALED TUNNEL

NOTE:VALVES SWN-6 AND SWN-1111 LOCATED IN VALVE PIT OUTSIDE IN FRONT OF TURBINE BUILDING

NOTE:VALVES SWN-97,SWN-99,SWN-100-1 AND SWN-100-3 LOCATED IN VALVE PIT OUTSIDE ON SIDE OF TURBINE BUILDING

NEW YORK POWER AUTHORITY
INDIAN POINT UNIT NO.3

SERVICE WATER
24" LINE 408,
16" LINE 1220 &
10" LINE 1222

INT-3-3403

REV. 3

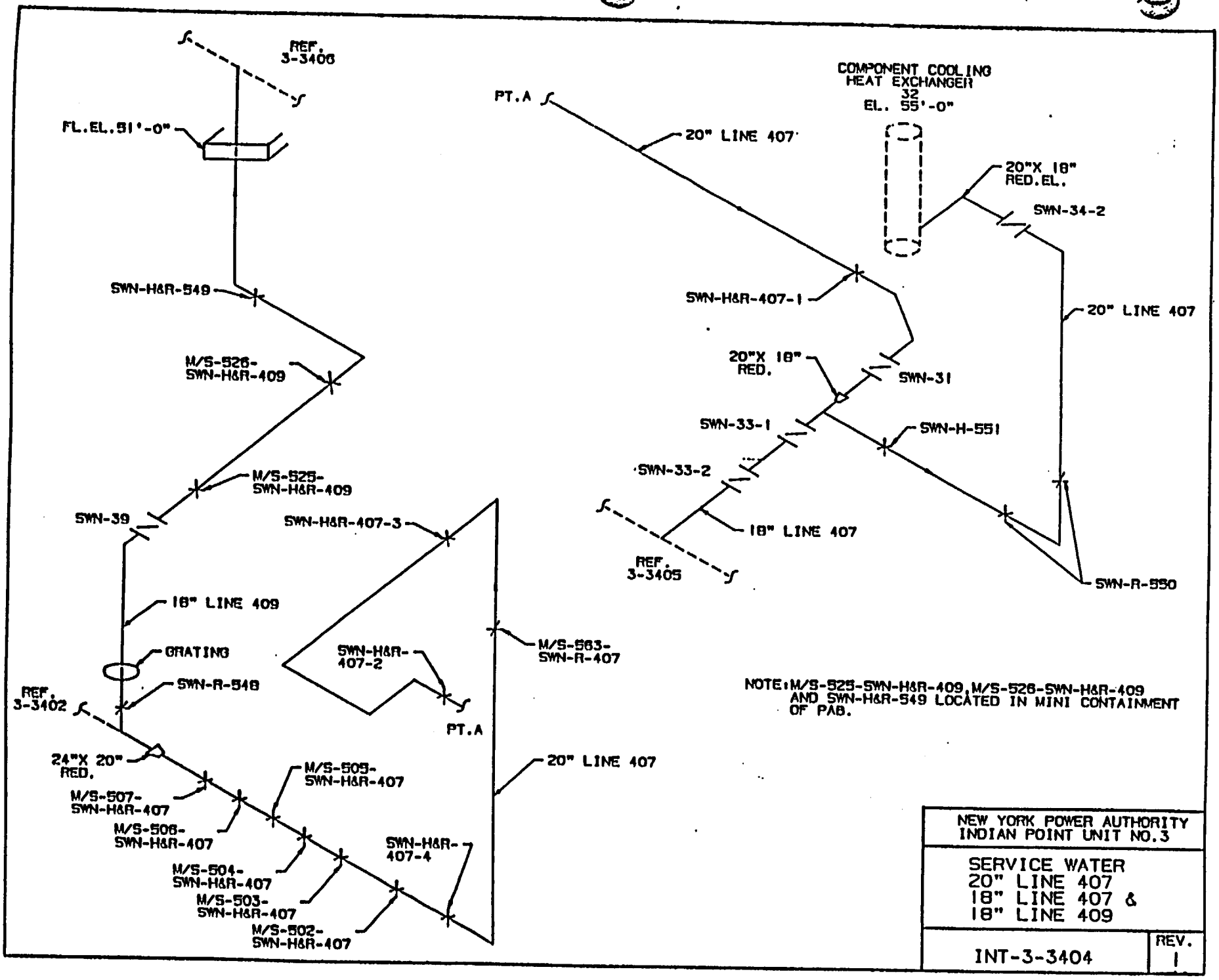
REF. 3-3406
FL.EL.51'-0"
SWN-H&R-549
M/S-526-SWN-H&R-409
M/S-525-SWN-H&R-409
SWN-39
18" LINE 409
GRATING
SWN-R-548
REF. 3-3402
24"X 20" RED.
M/S-507-SWN-H&R-407
M/S-506-SWN-H&R-407
M/S-505-SWN-H&R-407
M/S-504-SWN-H&R-407
M/S-503-SWN-H&R-407
M/S-502-SWN-H&R-407
SWN-H&R-407-4
SWN-H&R-407-3
SWN-H&R-407-2
PT.A
M/S-563-SWN-R-407
20" LINE 407
PT.A
20" LINE 407
COMPONENT COOLING HEAT EXCHANGER 32 EL. 55'-0"
20"X 18" RED.EL.
SWN-34-2
SWN-H&R-407-1
20" LINE 407
20"X 18" RED.
SWN-31
SWN-33-1
SWN-H-551
SWN-33-2
18" LINE 407
REF. 3-3405
SWN-R-550
NOTE: M/S-525-SWN-H&R-409, M/S-526-SWN-H&R-409 AND SWN-H&R-549 LOCATED IN MINI CONTAINMENT OF PAB.
NEW YORK POWER AUTHORITY
INDIAN POINT UNIT NO.3
SERVICE WATER
20" LINE 407
18" LINE 407 &
18" LINE 409
INT-3-3404
REV. 1

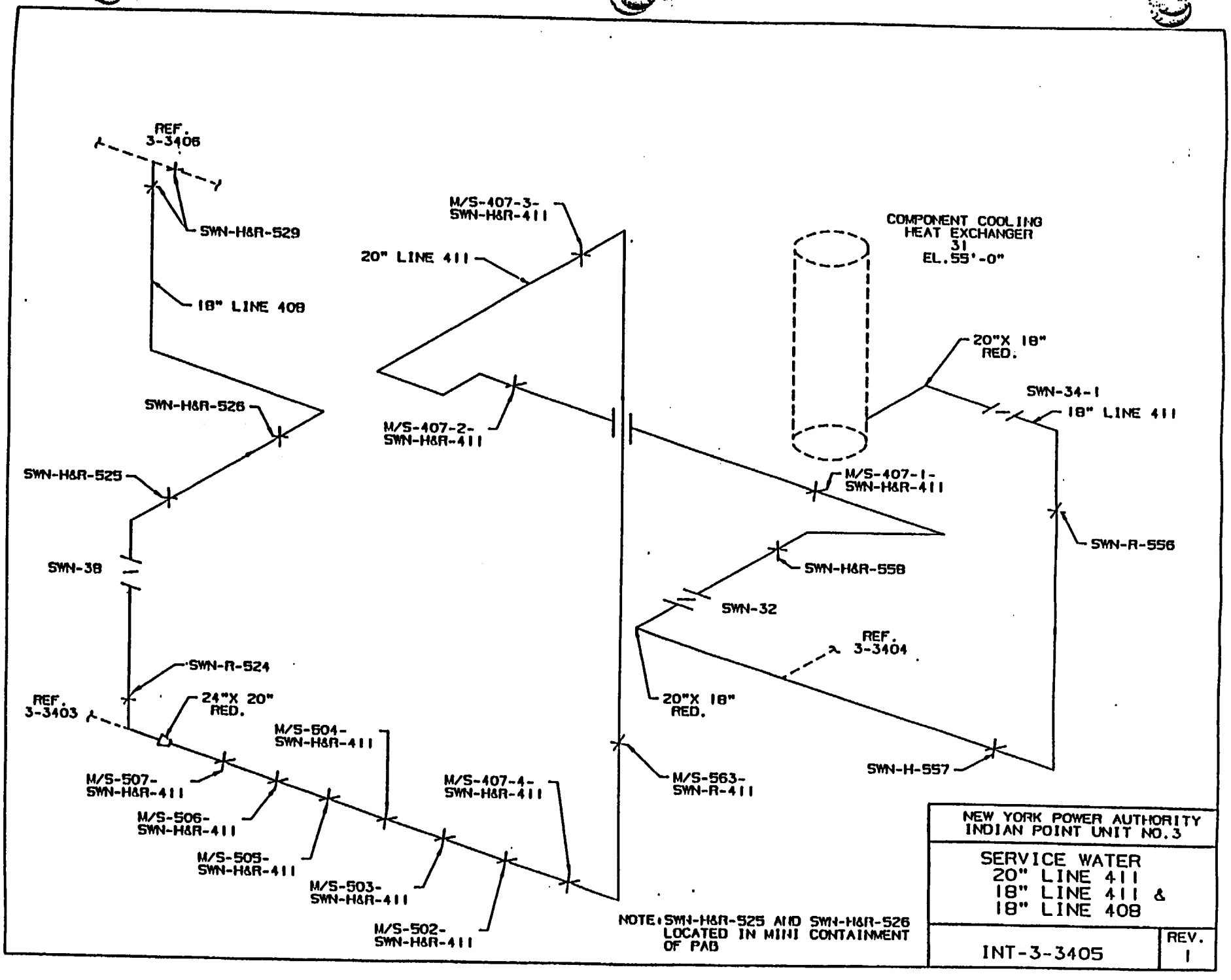
REF. 3-3406
SWN-H&R-529
18" LINE 408
SWN-H&R-526
SWN-H&R-525
SWN-38
SWN-R-524
REF. 3-3403
24"X 20" RED.
M/S-507-SWN-H&R-411
M/S-506-SWN-H&R-411
M/S-505-SWN-H&R-411
M/S-504-SWN-H&R-411
M/S-503-SWN-H&R-411
M/S-502-SWN-H&R-411
M/S-407-4-SWN-H&R-411
M/S-407-3-SWN-H&R-411
20" LINE 411
M/S-407-2-SWN-H&R-411
M/S-563-SWN-R-411
COMPONENT COOLING HEAT EXCHANGER 31 EL.55'-0"
20"X 18" RED.
SWN-34-1
18" LINE 411
M/S-407-1-SWN-H&R-411
SWN-R-556
SWN-H&R-558
SWN-32
REF. 3-3404
20"X 18" RED.
SWN-H-557
NOTE: SWN-H&R-525 AND SWN-H&R-526 LOCATED IN MINI CONTAINMENT OF PAB
NEW YORK POWER AUTHORITY
INDIAN POINT UNIT NO.3
SERVICE WATER
20" LINE 411
18" LINE 411 &
18" LINE 408
INT-3-3405
REV. 1

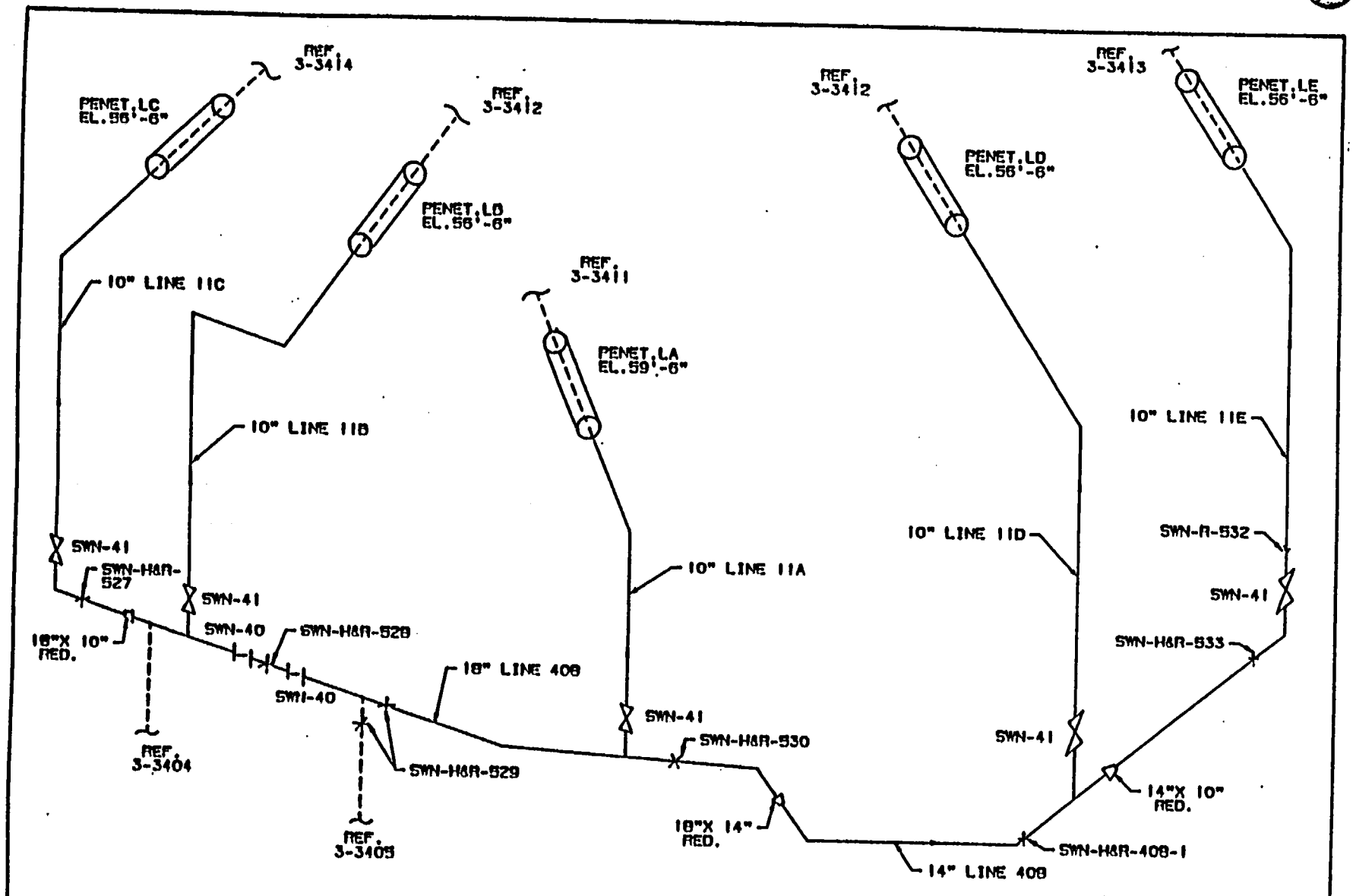

NEW YORK POWER AUTHORITY
INDIAN POINT UNIT NO. 3

SERVICE WATER
18" LINE 408, 14" LINE 408, 10" LINE 11A, 10" LINE 11B, 10" LINE 11C, 10" LINE 11D & 10" LINE 11E

INT-3-3406

REV. 0

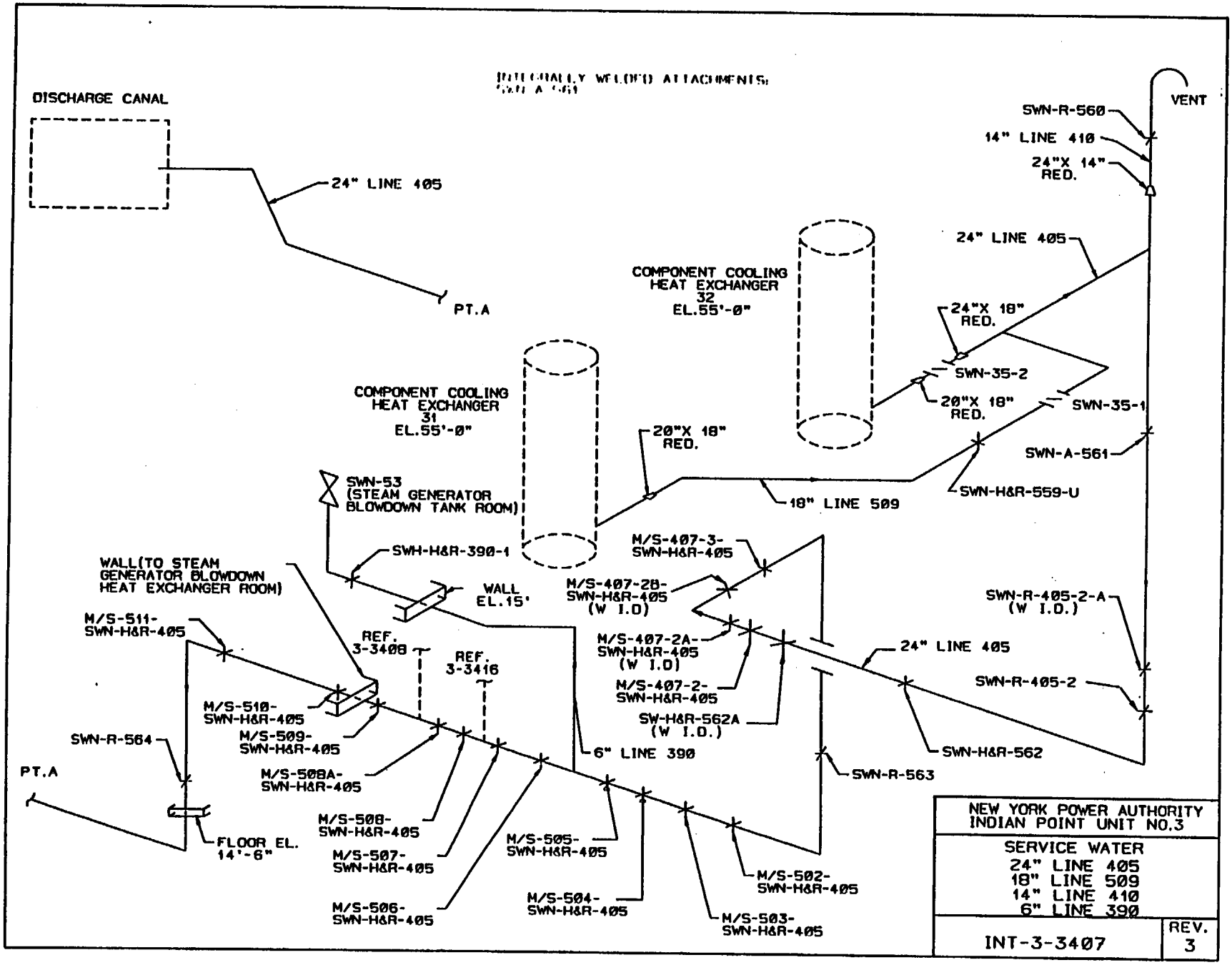
DISCHARGE CANAL
24" LINE 405
PT.A
VENT
SWN-R-560
14" LINE 410
24"X 14" RED.
24" LINE 405
COMPONENT COOLING HEAT EXCHANGER 32 EL.55'-0"
24"X 18" RED.
SWN-35-2
20"X 18" RED.
SWN-35-1
COMPONENT COOLING HEAT EXCHANGER 31 EL.55'-0"
20"X 18" RED.
SWN-A-561
SWN-53 (STEAM GENERATOR BLOWDOWN TANK ROOM)
18" LINE 509
SWN-H&R-559-U
SWH-H&R-390-1
M/S-407-3- SWN-H&R-405
WALL(TO STEAM GENERATOR BLOWDOWN HEAT EXCHANGER ROOM)
WALL EL.15'
M/S-407-2B- SWN-H&R-405 (W I.D)
SWN-R-405-2-A (W I.D.)
M/S-511- SWN-H&R-405
REF. 3-3408
REF. 3-3416
M/S-407-2A- SWN-H&R-405 (W I.D)
24" LINE 405
M/S-407-2- SWN-H&R-405
SWN-R-405-2
M/S-510- SWN-H&R-405
SW-H&R-562A (W I.D.)
M/S-509- SWN-H&R-405
SWN-R-564
6" LINE 390
SWN-H&R-562
PT.A
M/S-508A- SWN-H&R-405
SWN-R-563
M/S-508- SWN-H&R-405
FLOOR EL. 14'-6"
M/S-505- SWN-H&R-405
M/S-507- SWN-H&R-405
M/S-502- SWN-H&R-405
M/S-506- SWN-H&R-405
M/S-504- SWN-H&R-405
M/S-503- SWN-H&R-405
NEW YORK POWER AUTHORITY
INDIAN POINT UNIT NO.3
SERVICE WATER
24" LINE 405
18" LINE 509
14" LINE 410
6" LINE 390
INT-3-3407
REV. 3

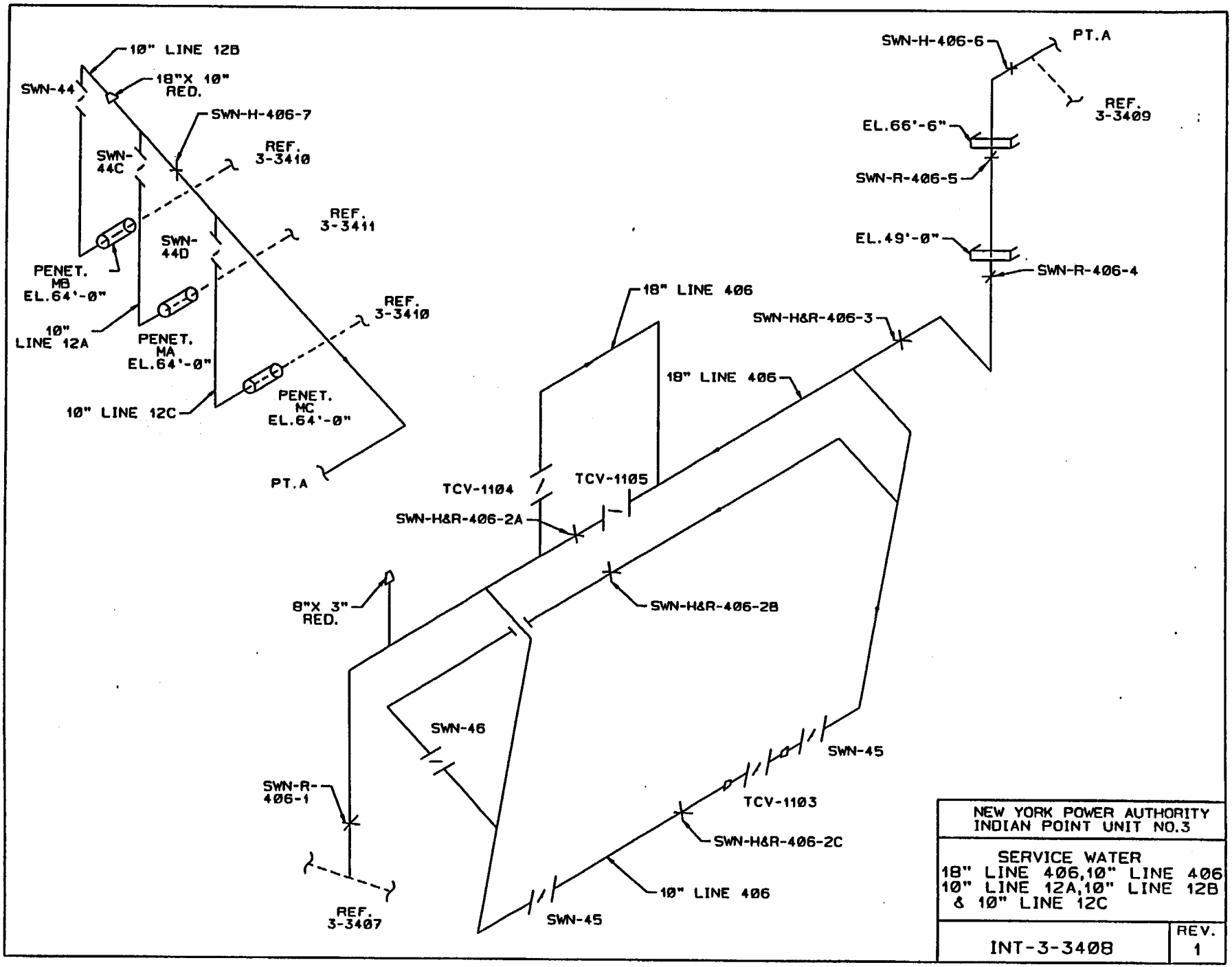
10" LINE 12B
SWN-44
18"X 10" RED.
SWN-H-406-7
REF. 3-3410
SWN-44C
REF. 3-3411
SWN-44D
PENET. MB EL.64'-0"
10" LINE 12A
PENET. MA EL.64'-0"
REF. 3-3410
10" LINE 12C
PENET. MC EL.64'-0"
PT.A
SWN-H-406-6
PT.A
REF. 3-3409
EL.66'-6"
SWN-R-406-5
EL.49'-0"
SWN-R-406-4
18" LINE 406
SWN-H&R-406-3
18" LINE 406
TCV-1104
TCV-1105
SWN-H&R-406-2A
8"X 3" RED.
SWN-H&R-406-2B
SWN-46
SWN-45
SWN-R-406-1
TCV-1103
SWN-H&R-406-2C
10" LINE 406
REF. 3-3407
SWN-45
NEW YORK POWER AUTHORITY
INDIAN POINT UNIT NO.3
SERVICE WATER
18" LINE 406,10" LINE 406
10" LINE 12A,10" LINE 12B
& 10" LINE 12C
INT-3-3408
REV.
1

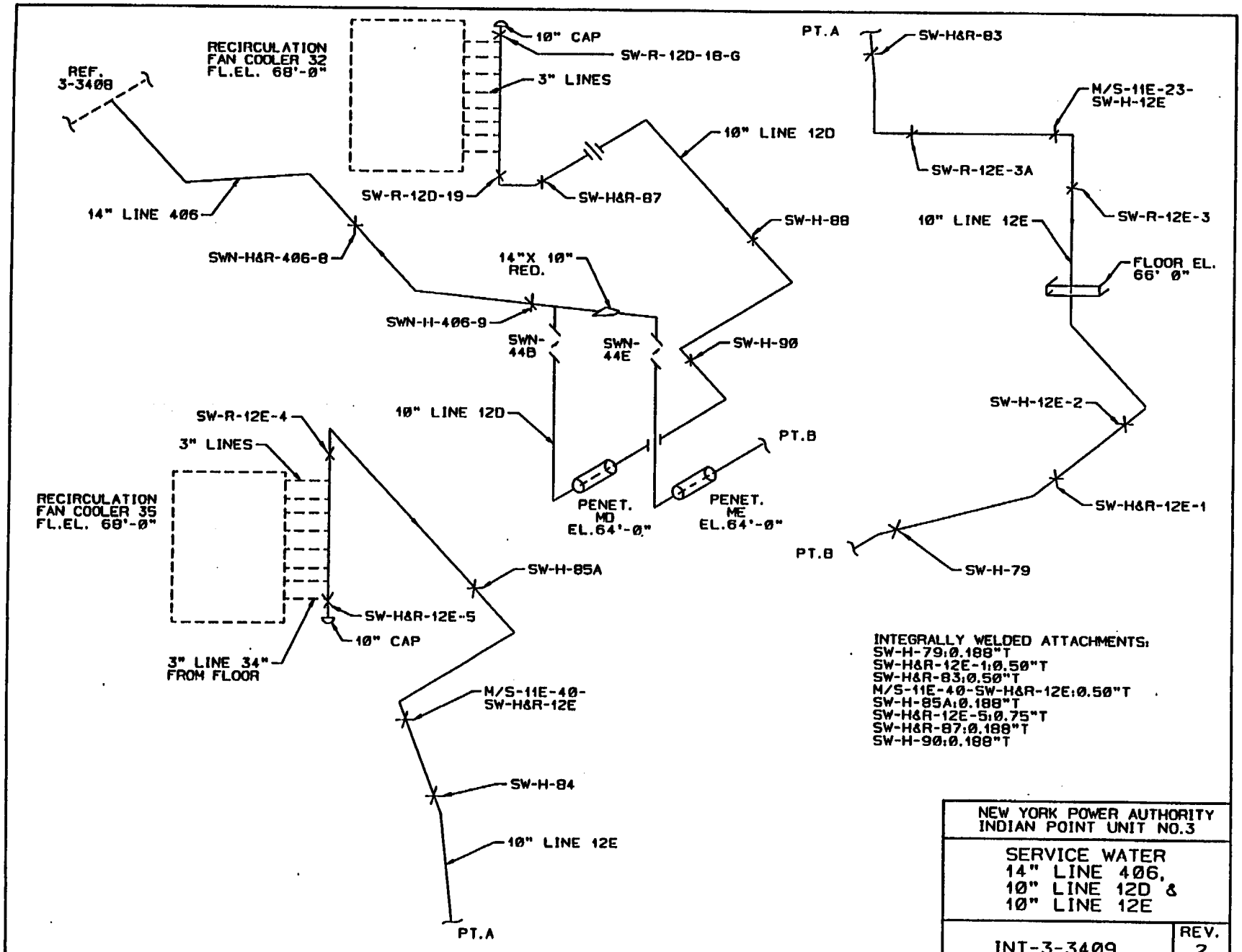

INTEGRALLY WELDED ATTACHMENTS:
SW-H-79;0.188"T
SW-H&R-12E-1;0.50"T
SW-H&R-83;0.50"T
M/S-11E-40-SW-H&R-12E;0.50"T
SW-H-85A;0.188"T
SW-H&R-12E-5;0.75"T
SW-H&R-87;0.188"T
SW-H-90;0.188"T

NEW YORK POWER AUTHORITY INDIAN POINT UNIT NO.3	
SERVICE WATER 14" LINE 406, 10" LINE 12D & 10" LINE 12E	
INT-3-3409	REV. 2

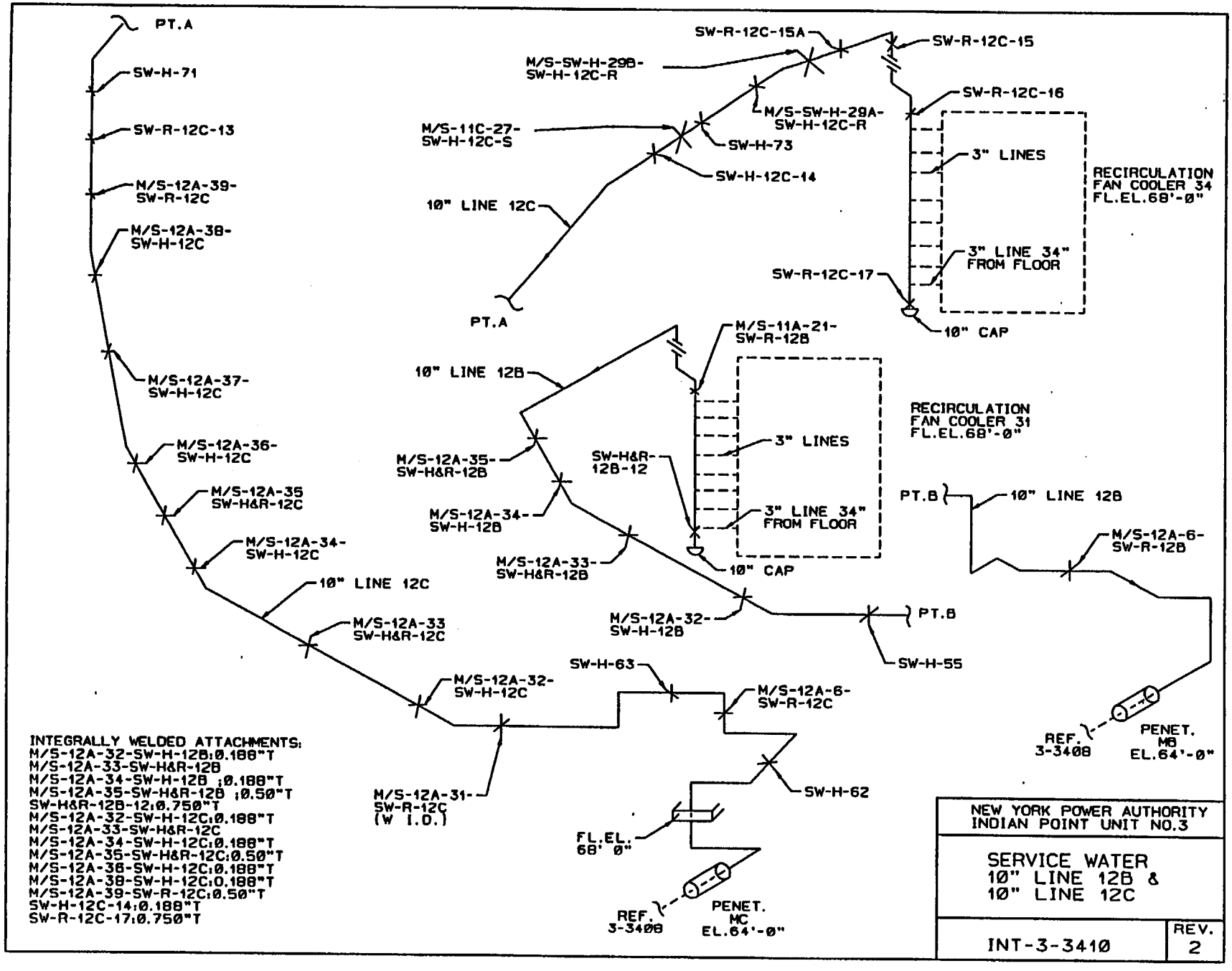

INTEGRALLY WELDED ATTACHMENTS:
M/S-12A-32-SW-H-12B;0.188"T
M/S-12A-33-SW-H&R-12B
M/S-12A-34-SW-H-12B ;0.188"T
M/S-12A-35-SW-H&R-12B ;0.50"T
SW-H&R-12B-12;0.750"T
M/S-12A-32-SW-H-12C;0.188"T
M/S-12A-33-SW-H&R-12C
M/S-12A-34-SW-H-12C;0.188"T
M/S-12A-35-SW-H&R-12C;0.50"T
M/S-12A-36-SW-H-12C;0.188"T
M/S-12A-38-SW-H-12C;0.188"T
M/S-12A-39-SW-R-12C;0.50"T
SW-H-12C-14;0.188"T
SW-R-12C-17;0.750"T

NEW YORK POWER AUTHORITY
INDIAN POINT UNIT NO.3

SERVICE WATER
10" LINE 12B &
10" LINE 12C

INT-3-3410

REV. 2

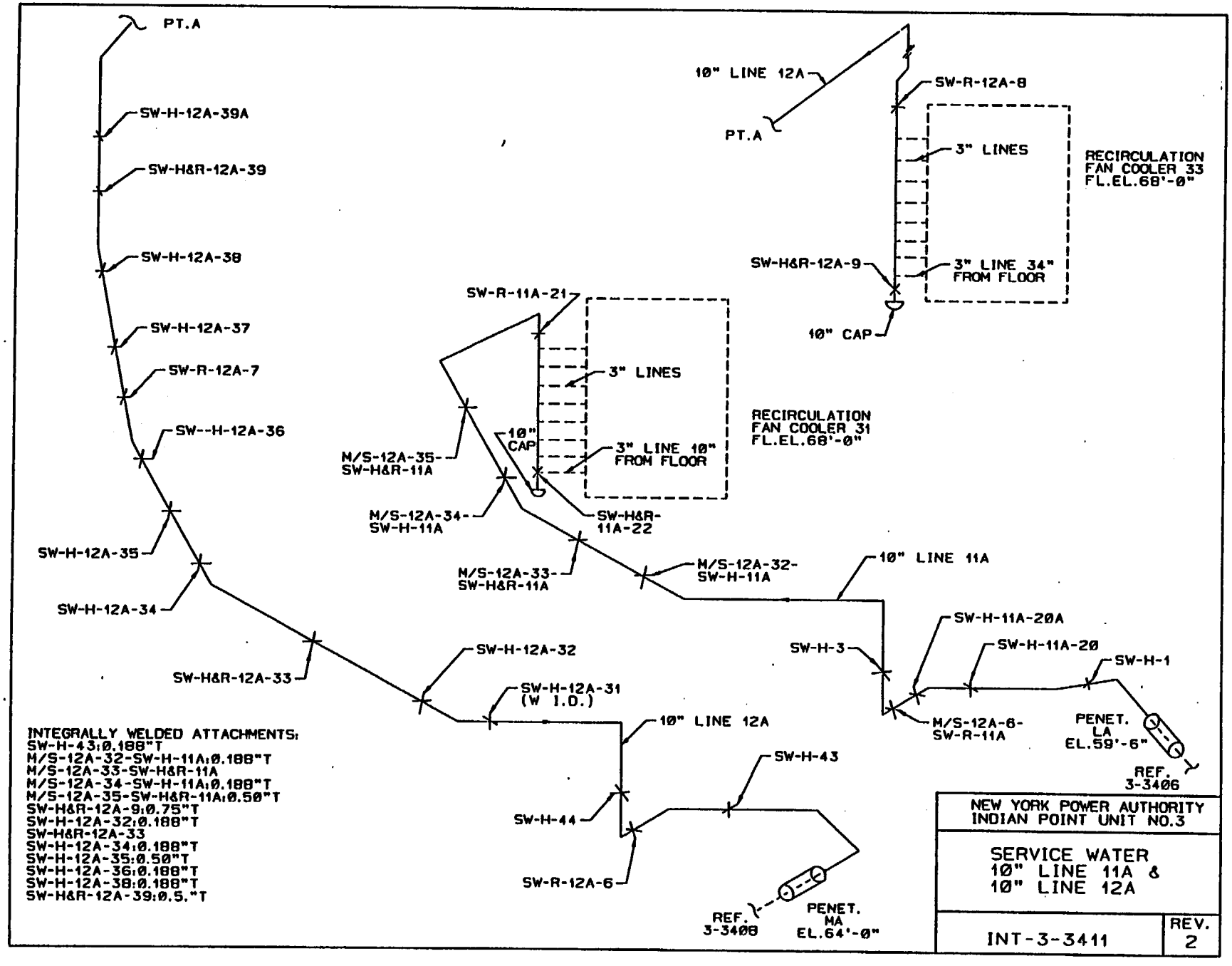

INTEGRALLY WELDED ATTACHMENTS:
SW-H-43:0.188"T
M/S-12A-32-SW-H-11A:0.188"T
M/S-12A-33-SW-H&R-11A
M/S-12A-34-SW-H-11A:0.188"T
M/S-12A-35-SW-H&R-11A:0.50"T
SW-H&R-12A-9:0.75"T
SW-H-12A-32:0.188"T
SW-H&R-12A-33
SW-H-12A-34:0.188"T
SW-H-12A-35:0.50"T
SW-H-12A-36:0.188"T
SW-H-12A-38:0.188"T
SW-H&R-12A-39:0.5."T

NEW YORK POWER AUTHORITY
INDIAN POINT UNIT NO.3

SERVICE WATER
10" LINE 11A &
10" LINE 12A

INT-3-3411

REV.
2

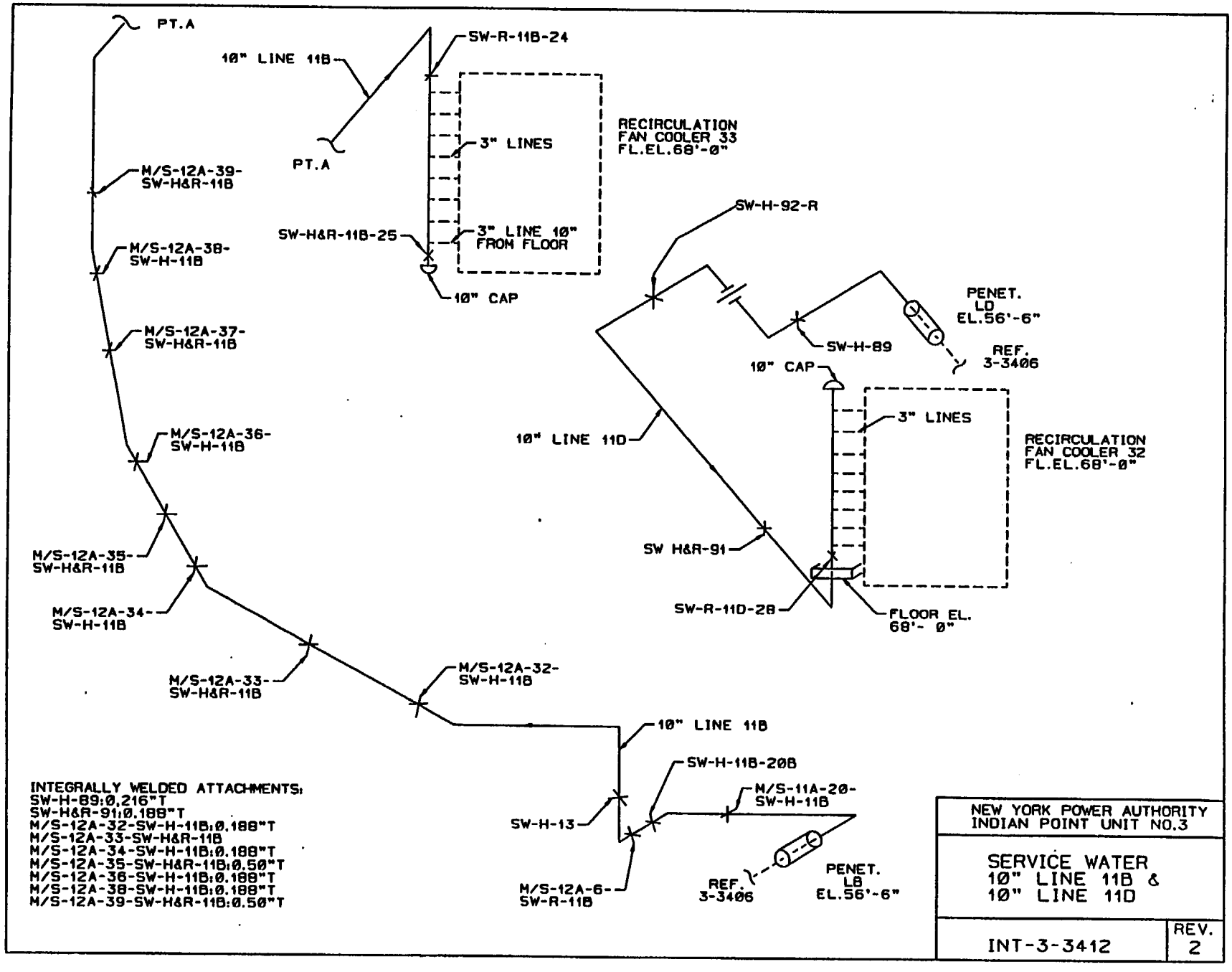
PT.A
10" LINE 11B
SW-R-11B-24
PT.A
3" LINES
RECIRCULATION
FAN COOLER 33
FL.EL.68'-0"
M/S-12A-39-
SW-H&R-11B
SW-H&R-11B-25
3" LINE 10"
FROM FLOOR
M/S-12A-38-
SW-H-11B
10" CAP
M/S-12A-37-
SW-H&R-11B
SW-H-92-R
PENET.
LD
EL.56'-6"
SW-H-89
REF.
3-3406
10" CAP
3" LINES
M/S-12A-36-
SW-H-11B
10" LINE 11D
RECIRCULATION
FAN COOLER 32
FL.EL.68'-0"
M/S-12A-35-
SW-H&R-11B
SW H&R-91
M/S-12A-34-
SW-H-11B
SW-R-11D-28
FLOOR EL.
68'- 0"
M/S-12A-33-
SW-H&R-11B
M/S-12A-32-
SW-H-11B
10" LINE 11B
SW-H-11B-20B
M/S-11A-20-
SW-H-11B
SW-H-13
M/S-12A-6-
SW-R-11B
REF.
3-3406
PENET.
LB
EL.56'-6"
INTEGRALLY WELDED ATTACHMENTS:
SW-H-89:0.216"T
SW-H&R-91:0.188"T
M/S-12A-32-SW-H-11B:0.188"T
M/S-12A-33-SW-H&R-11B
M/S-12A-34-SW-H-11B:0.188"T
M/S-12A-35-SW-H&R-11B:0.50"T
M/S-12A-36-SW-H-11B:0.188"T
M/S-12A-38-SW-H-11B:0.188"T
M/S-12A-39-SW-H&R-11B:0.50"T
NEW YORK POWER AUTHORITY
INDIAN POINT UNIT NO.3
SERVICE WATER
10" LINE 11B &
10" LINE 11D
INT-3-3412
REV.
2

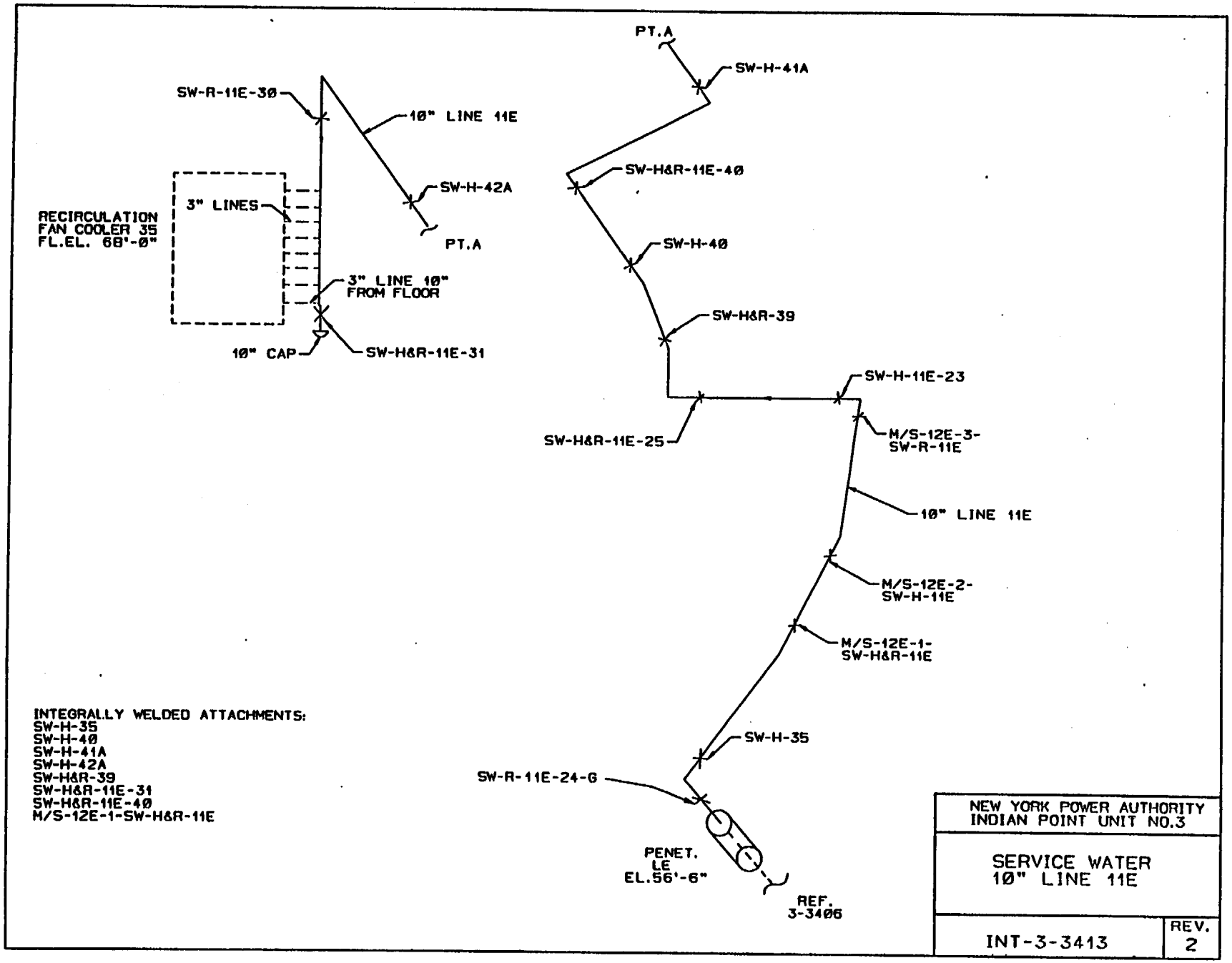
SW-R-11E-30
10" LINE 11E
SW-H-42A
PT.A
RECIRCULATION
FAN COOLER 35
FL.EL. 68'-0"
3" LINES
3" LINE 10"
FROM FLOOR
10" CAP
SW-H&R-11E-31
PT.A
SW-H-41A
SW-H&R-11E-40
SW-H-40
SW-H&R-39
SW-H-11E-23
SW-H&R-11E-25
M/S-12E-3-
SW-R-11E
10" LINE 11E
M/S-12E-2-
SW-H-11E
M/S-12E-1-
SW-H&R-11E
SW-H-35
SW-R-11E-24-G
PENET.
LE
EL.56'-6"
REF.
3-3406
INTEGRALLY WELDED ATTACHMENTS:
SW-H-35
SW-H-40
SW-H-41A
SW-H-42A
SW-H&R-39
SW-H&R-11E-31
SW-H&R-11E-40
M/S-12E-1-SW-H&R-11E
NEW YORK POWER AUTHORITY
INDIAN POINT UNIT NO.3
SERVICE WATER
10" LINE 11E
INT-3-3413
REV.
2

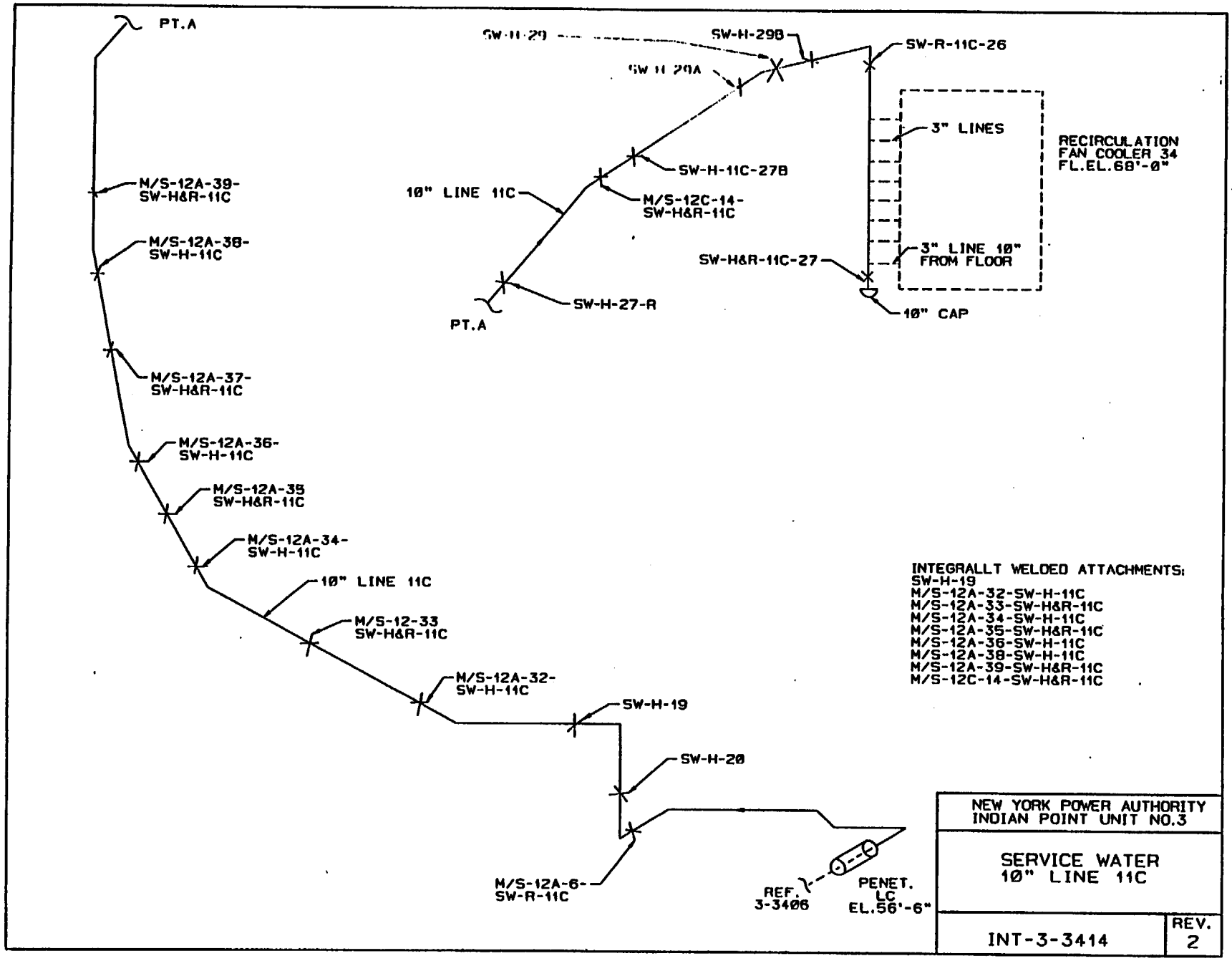
PT.A
SW-H-29
SW-H-29B
SW-R-11C-26
SW-H-29A
3" LINES
RECIRCULATION
FAN COOLER 34
FL.EL.68'-0"
SW-H-11C-27B
M/S-12A-39-
SW-H&R-11C
10" LINE 11C
M/S-12C-14-
SW-H&R-11C
M/S-12A-38-
SW-H-11C
3" LINE 10"
FROM FLOOR
SW-H&R-11C-27
SW-H-27-R
PT.A
10" CAP
M/S-12A-37-
SW-H&R-11C
M/S-12A-36-
SW-H-11C
M/S-12A-35
SW-H&R-11C
M/S-12A-34-
SW-H-11C
10" LINE 11C
M/S-12-33
SW-H&R-11C
M/S-12A-32-
SW-H-11C
SW-H-19
SW-H-20
M/S-12A-6-
SW-R-11C
REF.
3-3406
PENET.
LC
EL.56'-6"
INTEGRALLT WELDED ATTACHMENTS:
SW-H-19
M/S-12A-32-SW-H-11C
M/S-12A-33-SW-H&R-11C
M/S-12A-34-SW-H-11C
M/S-12A-35-SW-H&R-11C
M/S-12A-36-SW-H-11C
M/S-12A-38-SW-H-11C
M/S-12A-39-SW-H&R-11C
M/S-12C-14-SW-H&R-11C
NEW YORK POWER AUTHORITY
INDIAN POINT UNIT NO.3
SERVICE WATER
10" LINE 11C
INT-3-3414
REV.
2

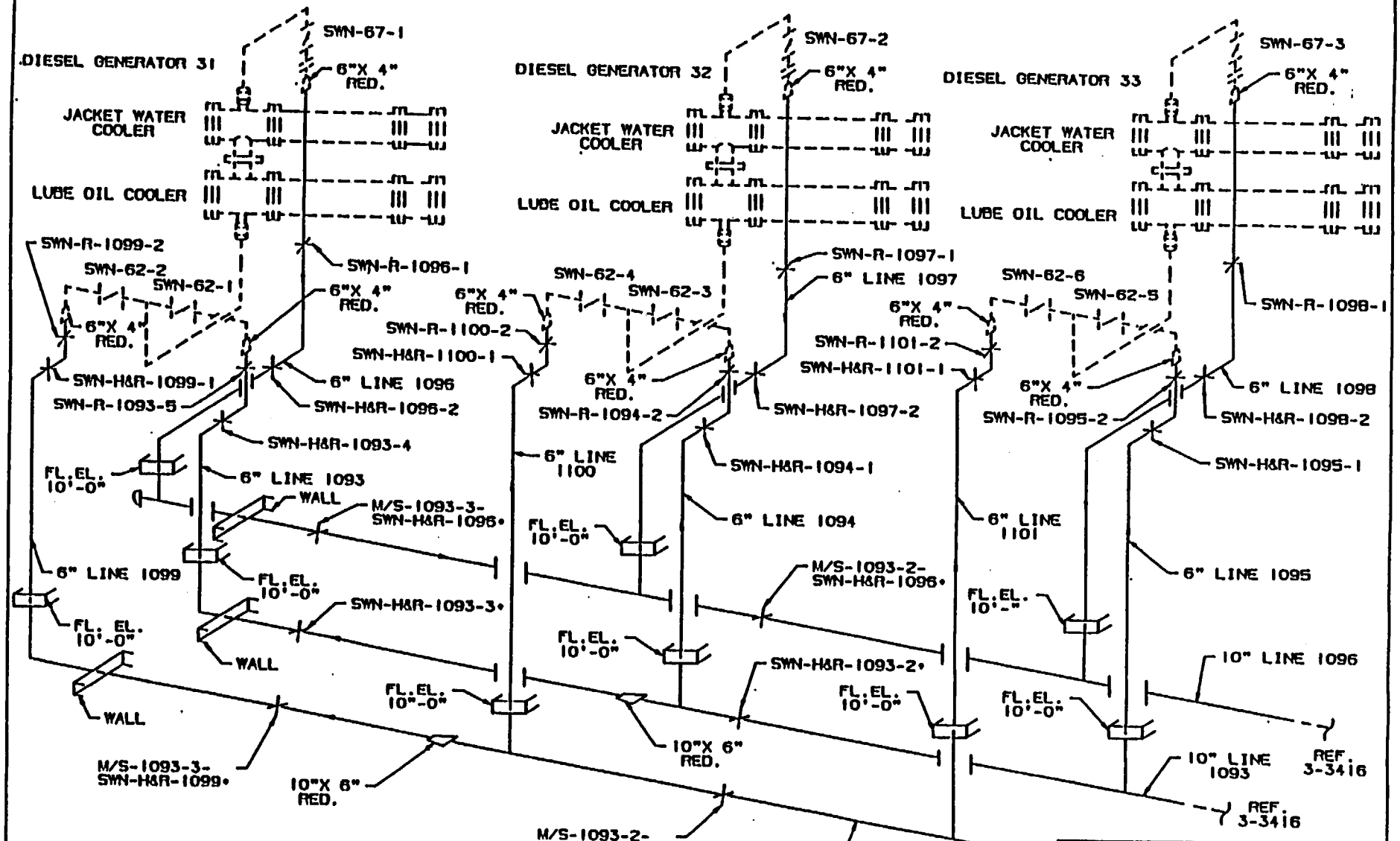

•INACCESSIBLE UNDERGROUND

NEW YORK POWER AUTHORITY
INDIAN POINT UNIT NO.3

SERVICE WATER
10" LINES 1093, 1096 & 1099
6" LINES 1093, 1096 & 1099
6" LINES 1094, 1095 & 1097
6" LINES 1098, 1100 & 1101

INT-3-3415

REV. 1

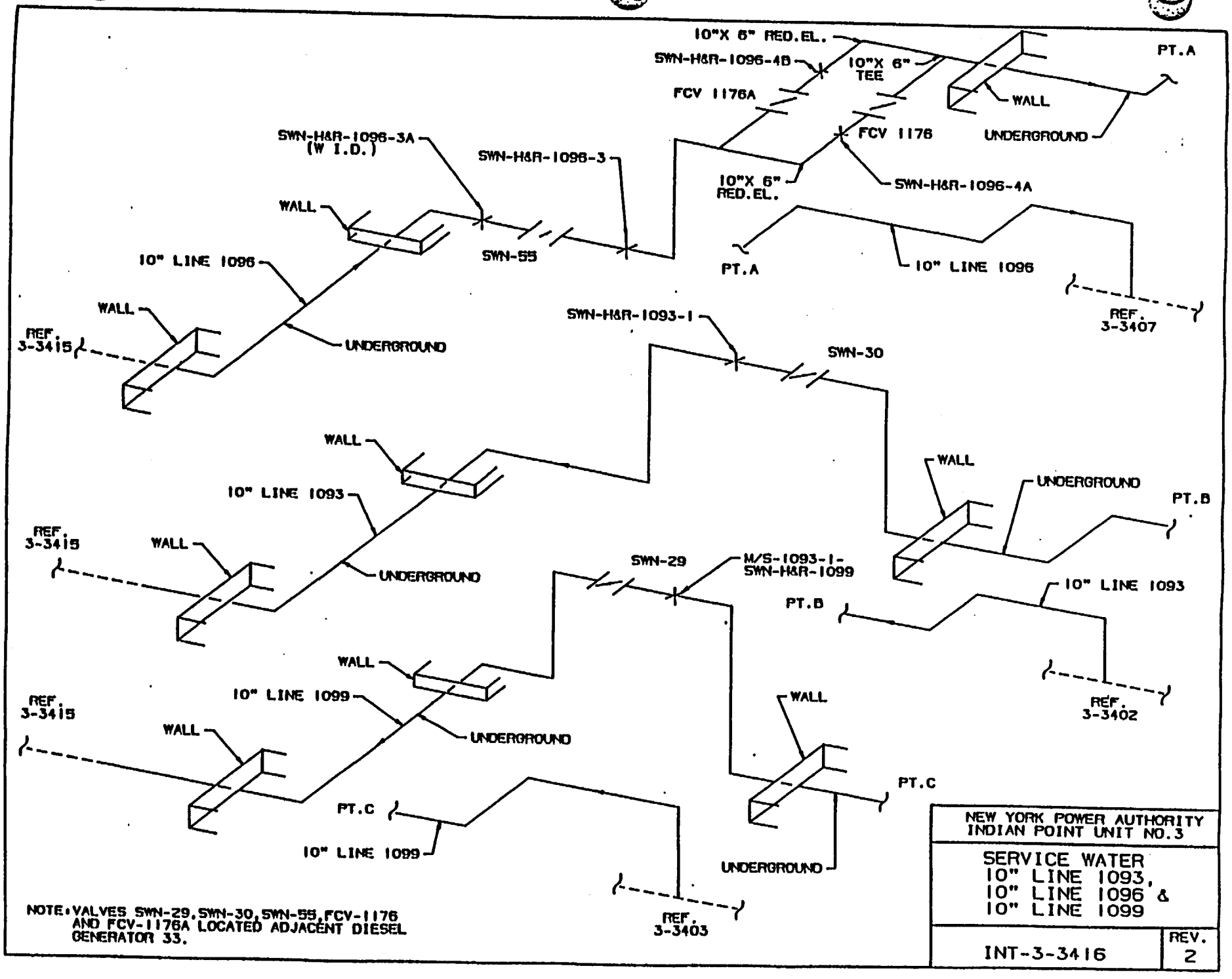
10"X 6" RED.EL.
SWN-H&R-1096-4B
10"X 6" TEE
PT.A
FCV 1176A
WALL
FCV 1176
UNDERGROUND
SWN-H&R-1096-3A (W I.D.)
SWN-H&R-1096-3
10"X 6" RED.EL.
SWN-H&R-1096-4A
WALL
SWN-55
PT.A
10" LINE 1096
10" LINE 1096
REF. 3-3407
WALL
REF. 3-3415
UNDERGROUND
SWN-H&R-1093-1
SWN-30
WALL
WALL
UNDERGROUND
PT.B
10" LINE 1093
REF. 3-3415
WALL
UNDERGROUND
SWN-29
M/S-1093-1-SWN-H&R-1099
10" LINE 1093
PT.B
REF. 3-3402
WALL
10" LINE 1099
REF. 3-3415
WALL
UNDERGROUND
WALL
PT.C
PT.C
10" LINE 1099
UNDERGROUND
REF. 3-3403
NOTE: VALVES SWN-29, SWN-30, SWN-55, FCV-1176 AND FCV-1176A LOCATED ADJACENT DIESEL GENERATOR 33.
NEW YORK POWER AUTHORITY
INDIAN POINT UNIT NO.3
SERVICE WATER
10" LINE 1093,
10" LINE 1096 &
10" LINE 1099
INT-3-3416
REV. 2

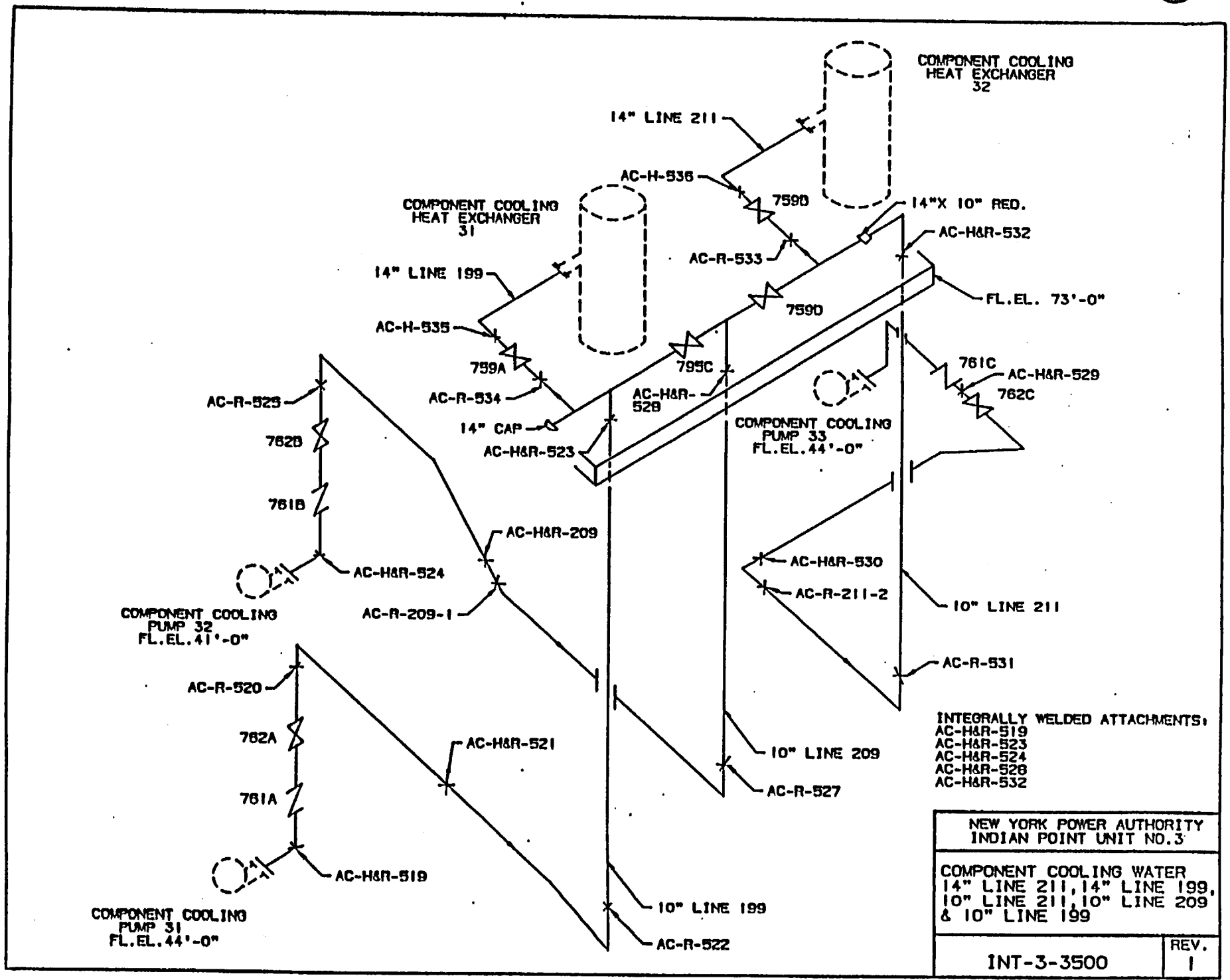
COMPONENT COOLING HEAT EXCHANGER 32
14" LINE 211
AC-H-536
759D
14"X 10" RED.
AC-H&R-532
COMPONENT COOLING HEAT EXCHANGER 31
AC-R-533
14" LINE 199
FL.EL. 73'-0"
759D
AC-H-535
759A
795C
761C
AC-H&R-529
762C
AC-R-525
AC-R-534
AC-H&R-528
14" CAP
COMPONENT COOLING PUMP 33 FL.EL.44'-0"
AC-H&R-523
762B
761B
AC-H&R-209
AC-H&R-530
AC-H&R-524
AC-R-211-2
10" LINE 211
COMPONENT COOLING PUMP 32 FL.EL.41'-0"
AC-R-209-1
AC-R-531
AC-R-520
762A
AC-H&R-521
10" LINE 209
761A
AC-R-527
AC-H&R-519
10" LINE 199
COMPONENT COOLING PUMP 31 FL.EL.44'-0"
AC-R-522
INTEGRALLY WELDED ATTACHMENTS:
AC-H&R-519
AC-H&R-523
AC-H&R-524
AC-H&R-528
AC-H&R-532
NEW YORK POWER AUTHORITY
INDIAN POINT UNIT NO.3
COMPONENT COOLING WATER
14" LINE 211, 14" LINE 199,
10" LINE 211, 10" LINE 209
& 10" LINE 199
INT-3-3500
REV.
1

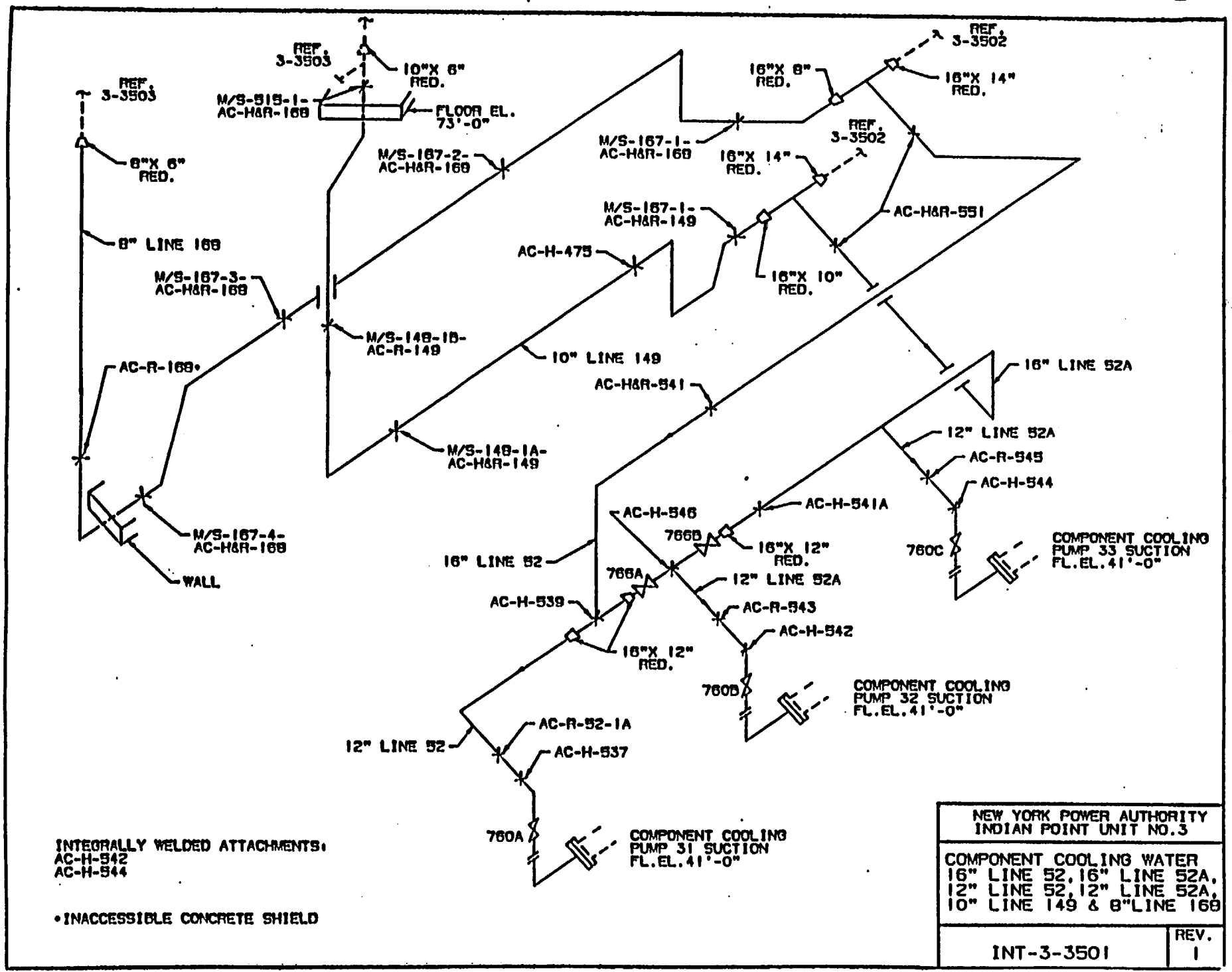

INTEGRALLY WELDED ATTACHMENTS:
AC-H-542
AC-H-544

*INACCESSIBLE CONCRETE SHIELD

NEW YORK POWER AUTHORITY INDIAN POINT UNIT NO.3	
COMPONENT COOLING WATER 16" LINE 52, 16" LINE 52A, 12" LINE 52, 12" LINE 52A, 10" LINE 149 & 8"LINE 168	
INT-3-3501	REV. 1

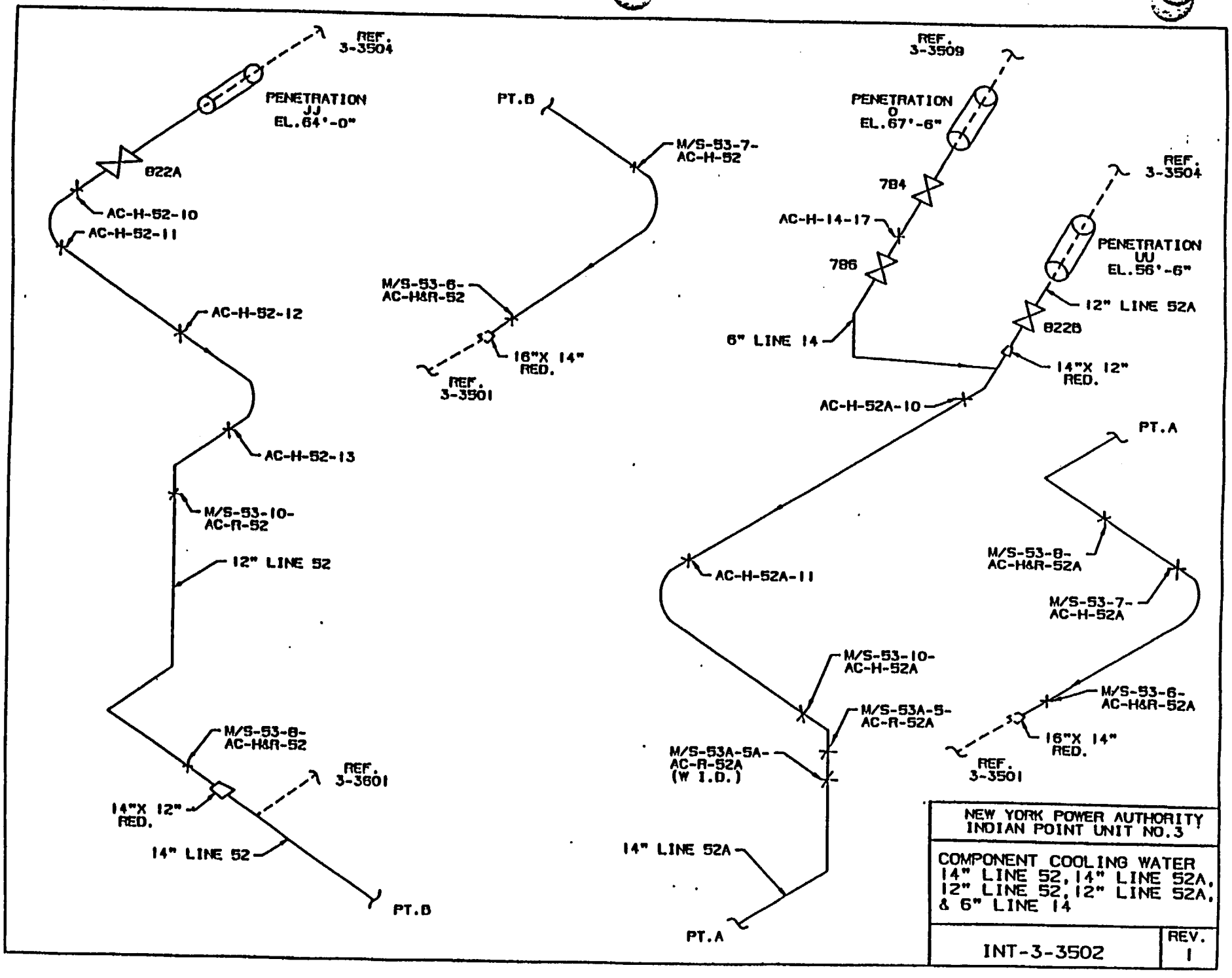
REF. 3-3504
PENETRATION JJ EL.64'-0"
822A
AC-H-52-10
AC-H-52-11
AC-H-52-12
AC-H-52-13
M/S-53-10-AC-R-52
12" LINE 52
M/S-53-8-AC-H&R-52
REF. 3-3601
14"X 12" RED.
14" LINE 52
PT.B
PT.B
M/S-53-7-AC-H-52
M/S-53-6-AC-H&R-52
16"X 14" RED.
REF. 3-3501
REF. 3-3509
PENETRATION O EL.67'-6"
784
AC-H-14-17
786
6" LINE 14
REF. 3-3504
PENETRATION UU EL.56'-6"
12" LINE 52A
822B
14"X 12" RED.
AC-H-52A-10
PT.A
AC-H-52A-11
M/S-53-8-AC-H&R-52A
M/S-53-7-AC-H-52A
M/S-53-10-AC-H-52A
M/S-53A-5-AC-R-52A
M/S-53-6-AC-H&R-52A
16"X 14" RED.
REF. 3-3501
M/S-53A-5A-AC-R-52A (W I.D.)
14" LINE 52A
PT.A
NEW YORK POWER AUTHORITY
INDIAN POINT UNIT NO.3
COMPONENT COOLING WATER
14" LINE 52, 14" LINE 52A,
12" LINE 52, 12" LINE 52A,
& 6" LINE 14
INT-3-3502
REV.
1

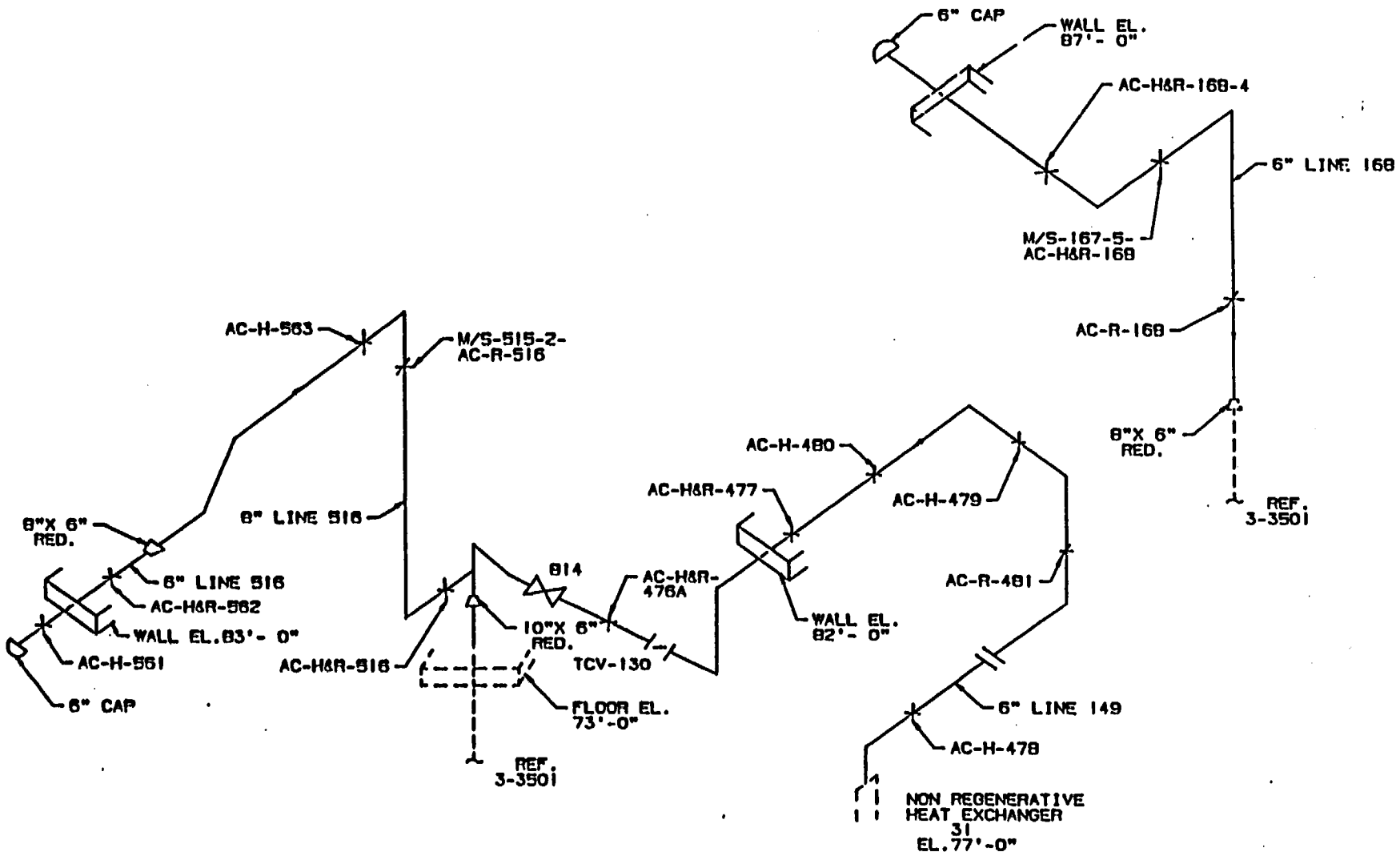

NEW YORK POWER AUTHORITY INDIAN POINT UNIT NO.3	
COMPONENT COOLING WATER 8" LINE 516,6" LINE 149, 6" LINE 168 & 6" LINE 516	
INT-3-3503	REV. 1

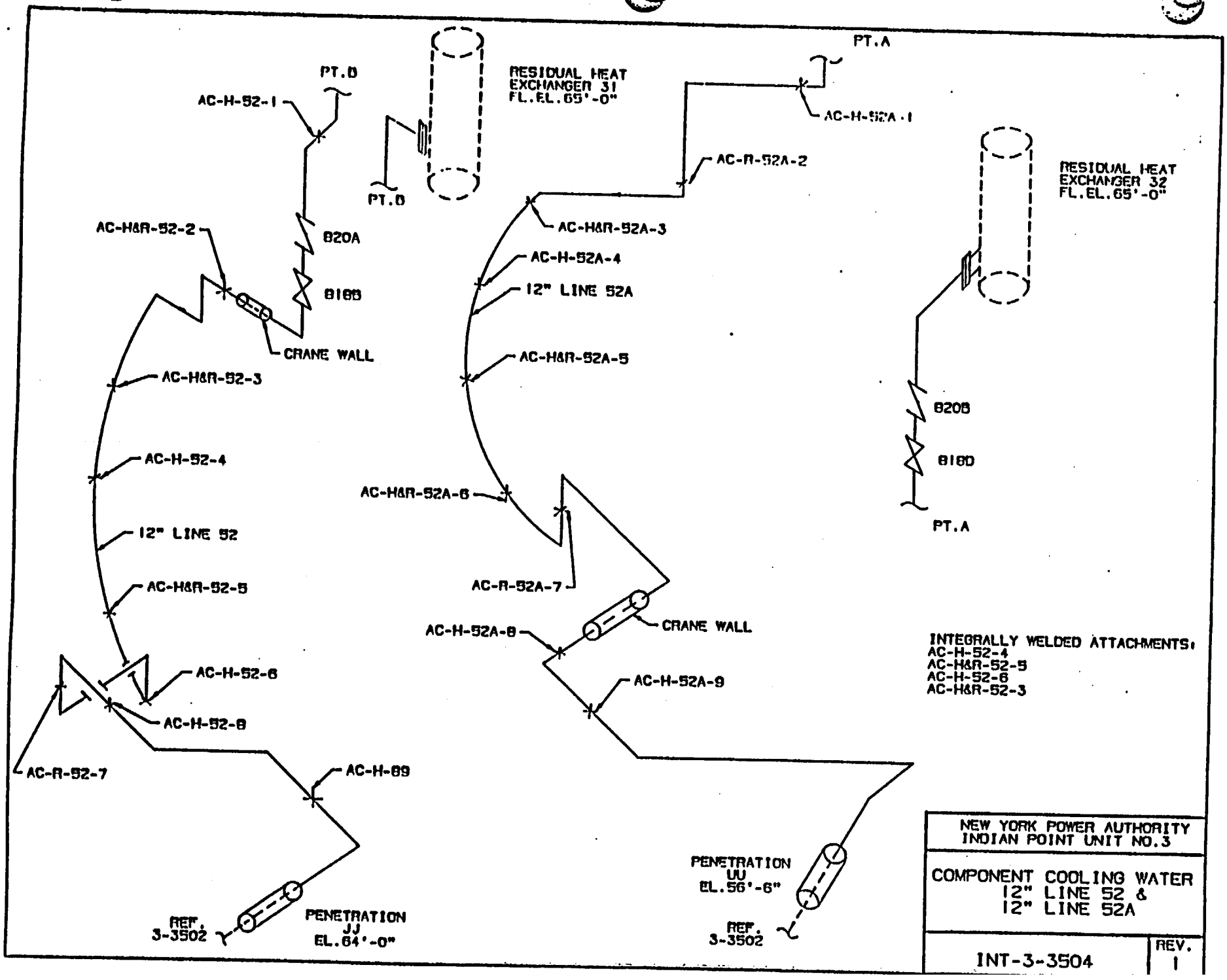
PT.B
AC-H-52-1
RESIDUAL HEAT
EXCHANGER 31
FL.EL.65'-0"
PT.B
PT.A
AC-H-52A-1
AC-R-52A-2
RESIDUAL HEAT
EXCHANGER 32
FL.EL.65'-0"
AC-H&R-52-2
820A
816B
CRANE WALL
AC-H&R-52-3
AC-H-52-4
12" LINE 52
AC-H&R-52-5
AC-H-52-6
AC-H-52-8
AC-R-52-7
AC-H-89
REF.
3-3502
PENETRATION
JJ
EL.64'-0"
AC-H&R-52A-3
AC-H-52A-4
12" LINE 52A
AC-H&R-52A-5
AC-H&R-52A-6
AC-R-52A-7
AC-H-52A-8
CRANE WALL
AC-H-52A-9
820B
816D
PT.A
PENETRATION
UU
EL.56'-6"
REF.
3-3502
INTEGRALLY WELDED ATTACHMENTS:
AC-H-52-4
AC-H&R-52-5
AC-H-52-6
AC-H&R-52-3
NEW YORK POWER AUTHORITY
INDIAN POINT UNIT NO.3
COMPONENT COOLING WATER
12" LINE 52 &
12" LINE 52A
INT-3-3504
REV.
1

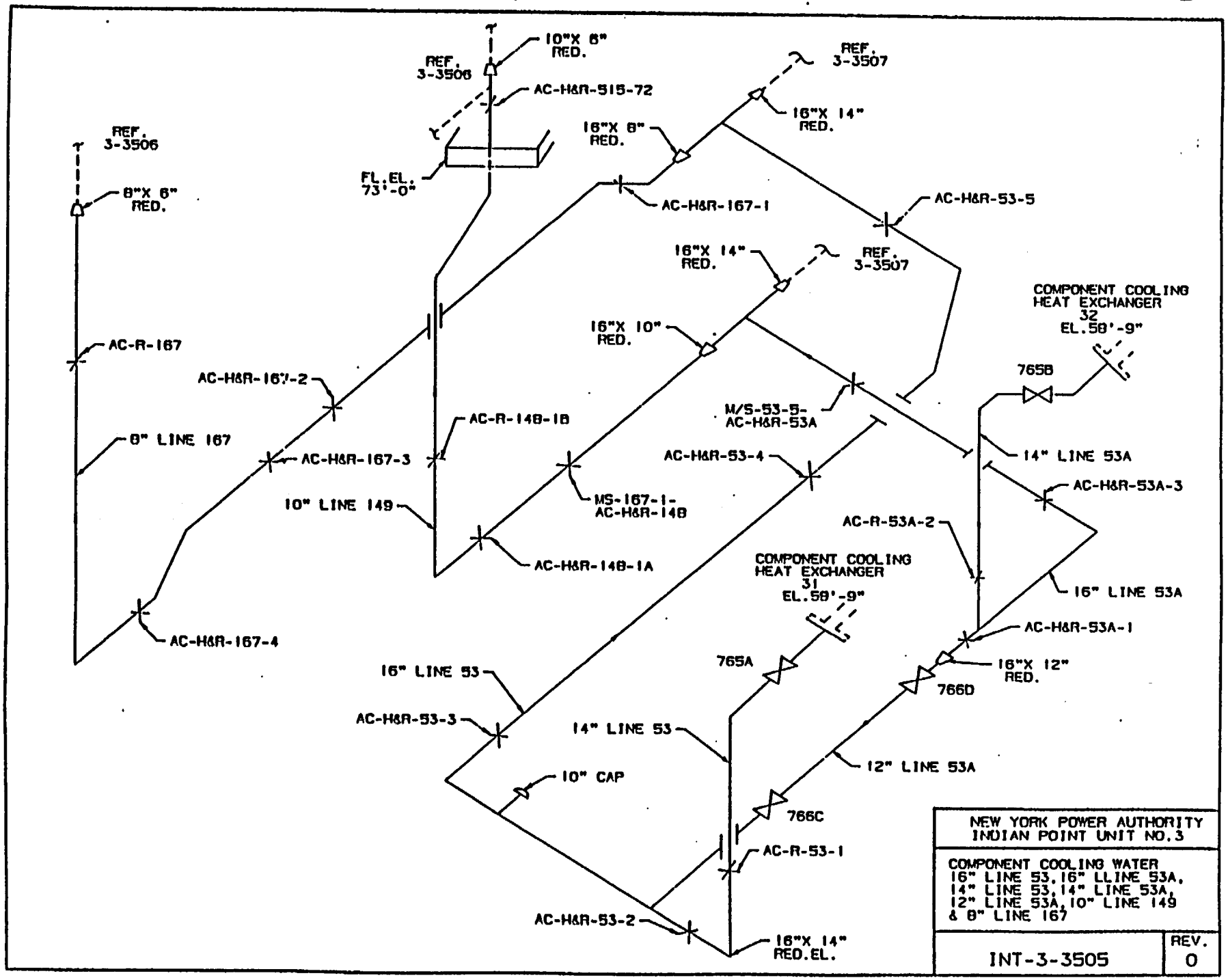
REF. 3-3506
8"X 6" RED.
AC-R-167
8" LINE 167
AC-H&R-167-4
AC-H&R-167-2
AC-H&R-167-3
10"X 8" RED.
REF. 3-3506
AC-H&R-515-72
FL.EL. 73'-0"
AC-R-148-1B
10" LINE 149
AC-H&R-148-1A
16"X 8" RED.
AC-H&R-167-1
16"X 10" RED.
MS-167-1-AC-H&R-148
16"X 14" RED.
REF. 3-3507
REF. 3-3507
16"X 14" RED.
AC-H&R-53-5
M/S-53-5-AC-H&R-53A
AC-H&R-53-4
16" LINE 53
AC-H&R-53-3
14" LINE 53
10" CAP
AC-H&R-53-2
16"X 14" RED.EL.
AC-R-53-1
766C
12" LINE 53A
766D
16"X 12" RED.
AC-H&R-53A-1
16" LINE 53A
AC-R-53A-2
AC-H&R-53A-3
14" LINE 53A
765B
COMPONENT COOLING HEAT EXCHANGER 32 EL.58'-9"
765A
COMPONENT COOLING HEAT EXCHANGER 31 EL.58'-9"
NEW YORK POWER AUTHORITY
INDIAN POINT UNIT NO.3
COMPONENT COOLING WATER
16" LINE 53,16" LLINE 53A,
14" LINE 53,14" LINE 53A,
12" LINE 53A,10" LINE 149
& 8" LINE 167
INT-3-3505
REV.
0

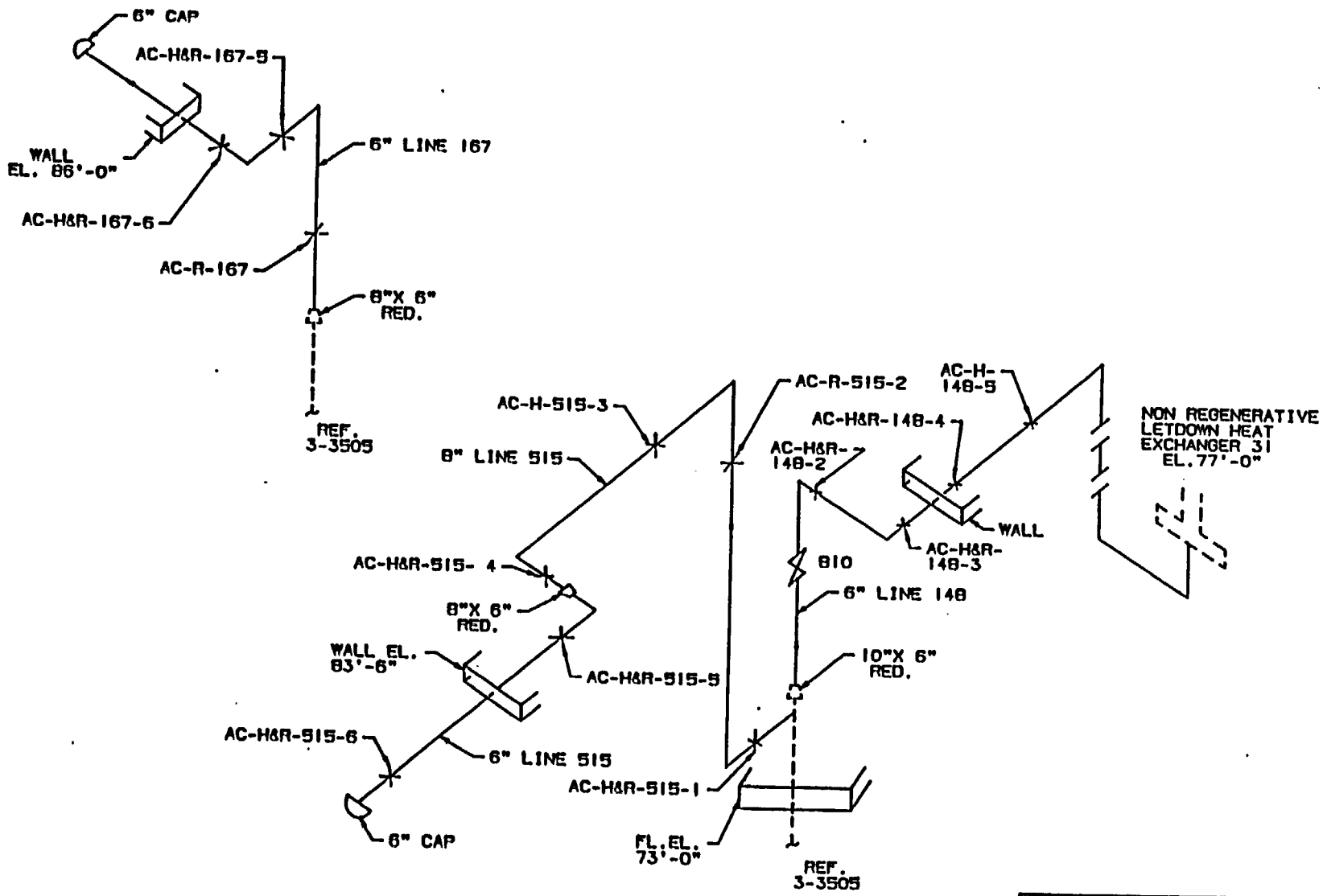

NEW YORK POWER AUTHORITY INDIAN POINT UNIT NO.3	
COMPONENT COOLING WATER 6" LINE 148, 6" LINE 167 & 6" LINE 515	
INT-3-3506	REV. 1

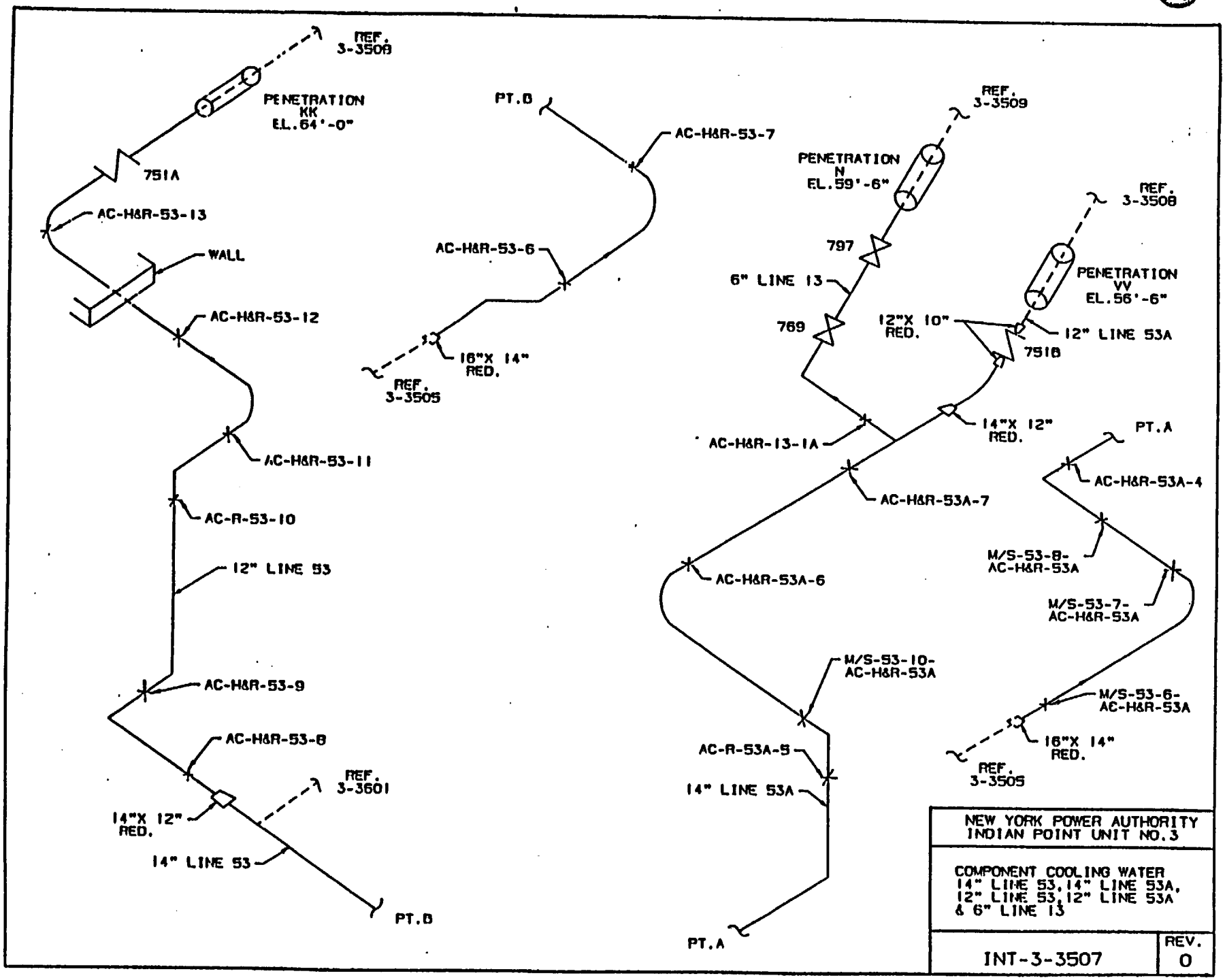
REF. 3-3508
PENETRATION KK EL.64'-0"
751A
AC-H&R-53-13
WALL
AC-H&R-53-12
AC-H&R-53-11
AC-R-53-10
12" LINE 53
AC-H&R-53-9
AC-H&R-53-8
REF. 3-3601
14"X 12" RED.
14" LINE 53
PT.B
PT.B
AC-H&R-53-7
AC-H&R-53-6
16"X 14" RED.
REF. 3-3505
REF. 3-3509
PENETRATION N EL.59'-6"
797
6" LINE 13
769
12"X 10" RED.
REF. 3-3508
PENETRATION VV EL.56'-6"
12" LINE 53A
751B
14"X 12" RED.
AC-H&R-13-1A
AC-H&R-53A-7
AC-H&R-53A-6
M/S-53-10-AC-H&R-53A
AC-R-53A-5
14" LINE 53A
PT.A
PT.A
AC-H&R-53A-4
M/S-53-8-AC-H&R-53A
M/S-53-7-AC-H&R-53A
M/S-53-6-AC-H&R-53A
16"X 14" RED.
REF. 3-3505
NEW YORK POWER AUTHORITY
INDIAN POINT UNIT NO.3
COMPONENT COOLING WATER
14" LINE 53, 14" LINE 53A,
12" LINE 53, 12" LINE 53A
& 6" LINE 13
INT-3-3507
REV.
0

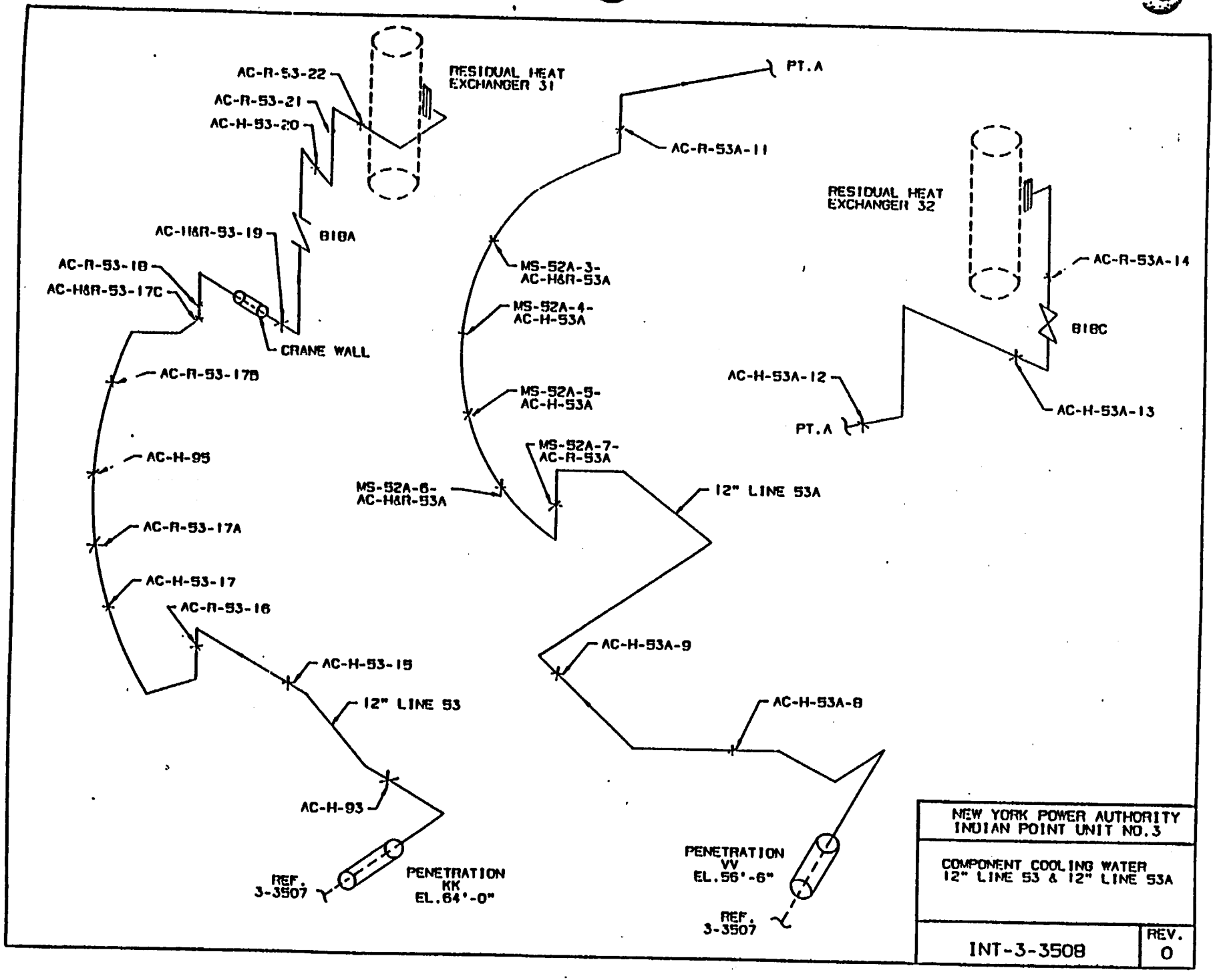
AC-R-53-22
AC-R-53-21
AC-H-53-20
RESIDUAL HEAT EXCHANGER 31
AC-H&R-53-19
B18A
AC-R-53-18
AC-H&R-53-17C
CRANE WALL
AC-R-53-17B
AC-H-95
AC-R-53-17A
AC-H-53-17
AC-R-53-16
AC-H-53-15
12" LINE 53
AC-H-93
REF. 3-3507
PENETRATION KK EL.64'-0"
PT.A
AC-R-53A-11
MS-52A-3-AC-H&R-53A
MS-52A-4-AC-H-53A
MS-52A-5-AC-H-53A
MS-52A-7-AC-R-53A
MS-52A-6-AC-H&R-53A
12" LINE 53A
AC-H-53A-9
AC-H-53A-8
PENETRATION VV EL.56'-6"
REF. 3-3507
RESIDUAL HEAT EXCHANGER 32
AC-R-53A-14
B18C
AC-H-53A-12
AC-H-53A-13
PT.A
NEW YORK POWER AUTHORITY
INDIAN POINT UNIT NO.3
COMPONENT COOLING WATER
12" LINE 53 & 12" LINE 53A
INT-3-3508
REV. 0

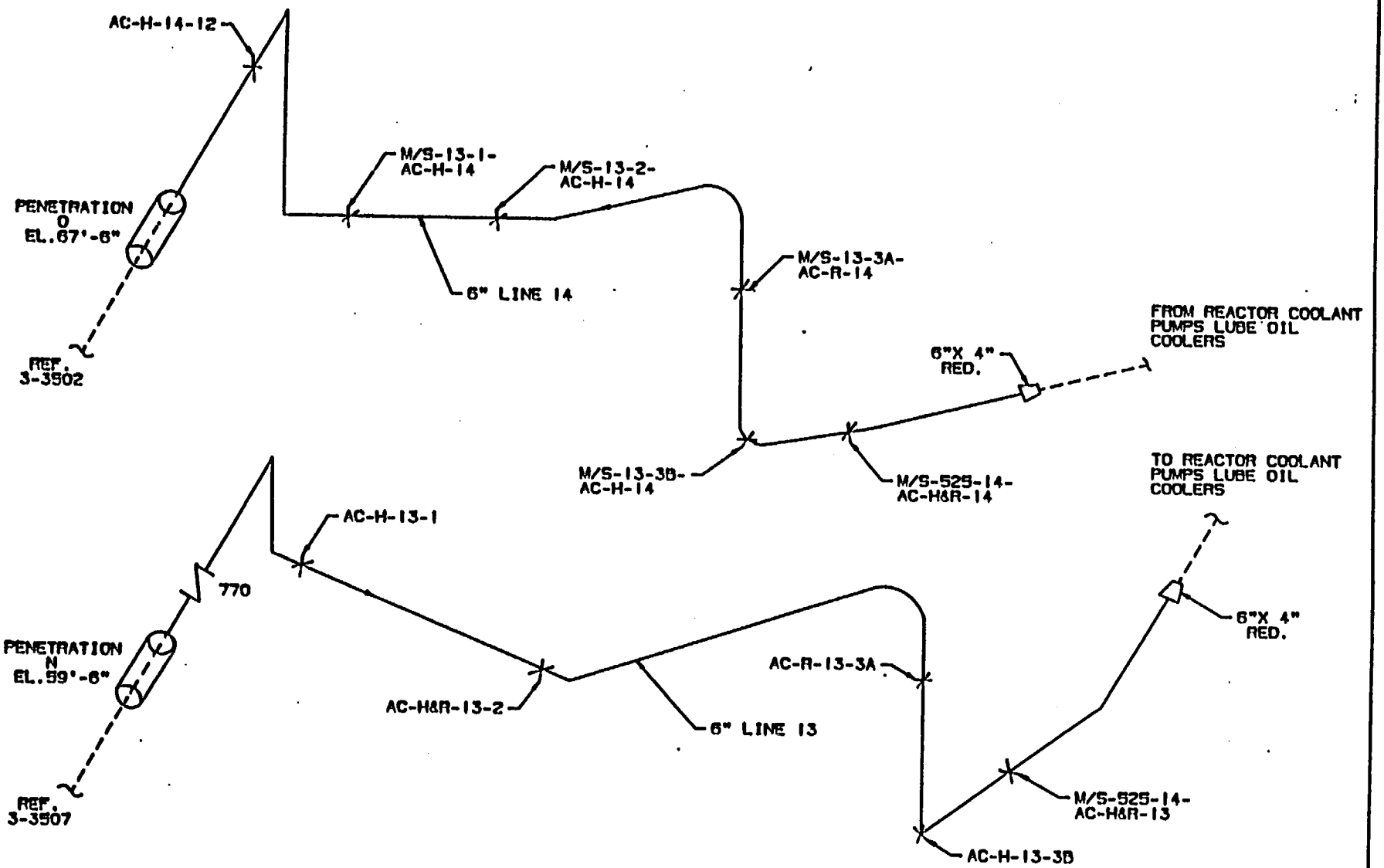

INTEGRALLY WELDED ATTACHMENTS:
M/S-13-3B-AC-H-14
AC-H-13-3B

NEW YORK POWER AUTHORITY INDIAN POINT UNIT NO.3	
COMPONENT COOLING WATER 6" LINE 13 & 6" LINE 14	
INT-3-3509	REV. 1

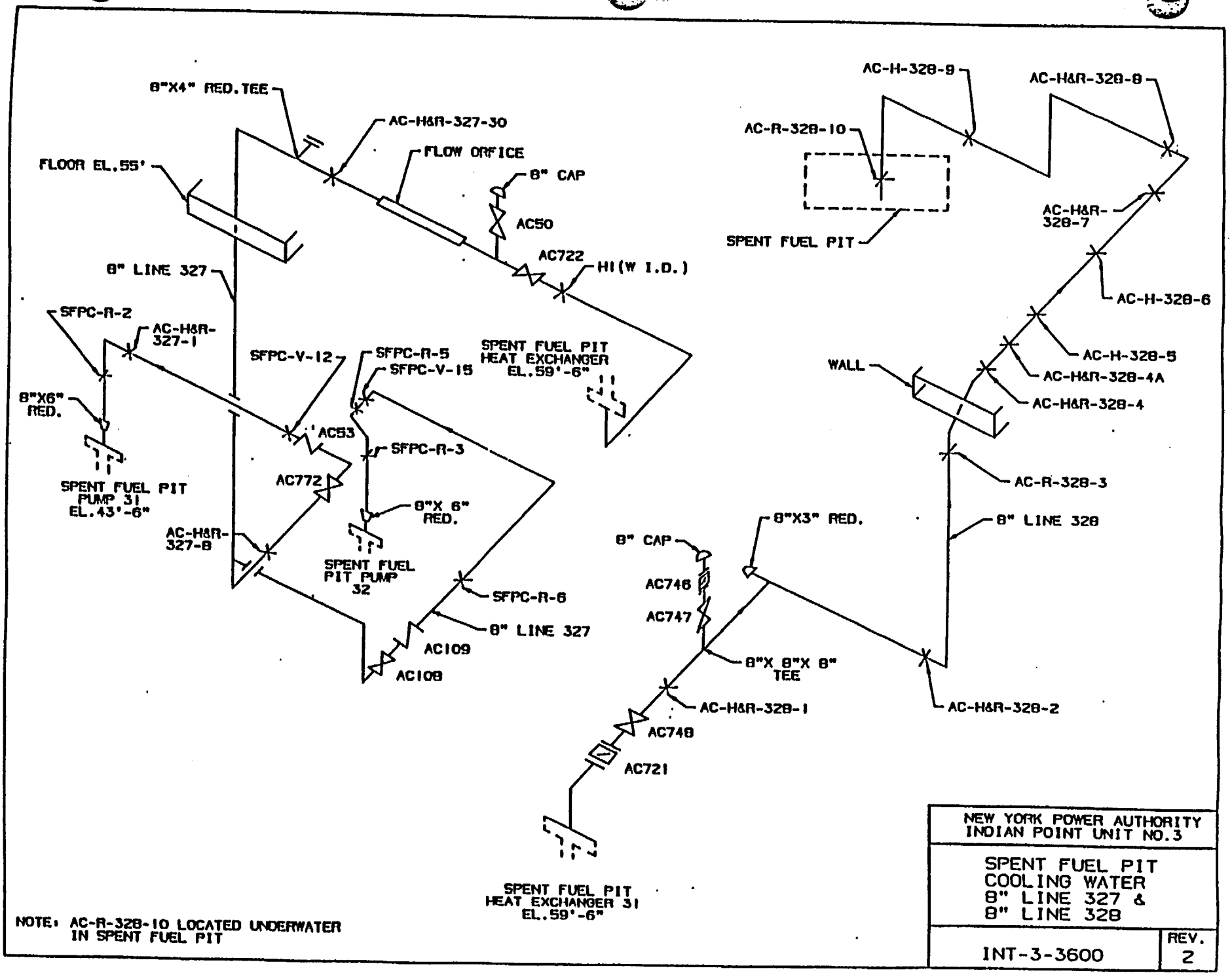
8"X4" RED.TEE
AC-H&R-327-30
FLOW ORFICE
FLOOR EL.55'
8" CAP
AC50
AC722
HI(W I.D.)
8" LINE 327
SFPC-R-2
AC-H&R-327-1
SFPC-V-12
SFPC-R-5
SFPC-V-15
SPENT FUEL PIT HEAT EXCHANGER EL.59'-6"
8"X6" RED.
AC53
SFPC-R-3
SPENT FUEL PIT PUMP 31 EL.43'-6"
AC772
8"X 6" RED.
AC-H&R-327-8
SPENT FUEL PIT PUMP 32
SFPC-R-6
8" LINE 327
AC109
AC108
AC-H-328-9
AC-H&R-328-8
AC-R-328-10
SPENT FUEL PIT
AC-H&R-328-7
AC-H-328-6
AC-H-328-5
WALL
AC-H&R-328-4A
AC-H&R-328-4
AC-R-328-3
8"X3" RED.
8" LINE 328
8" CAP
AC746
AC747
8"X 8"X 8" TEE
AC-H&R-328-1
AC-H&R-328-2
AC748
AC721
SPENT FUEL PIT HEAT EXCHANGER 31 EL.59'-6"
NOTE: AC-R-328-10 LOCATED UNDERWATER IN SPENT FUEL PIT
NEW YORK POWER AUTHORITY
INDIAN POINT UNIT NO.3
SPENT FUEL PIT COOLING WATER 8" LINE 327 & 8" LINE 328
INT-3-3600
REV. 2

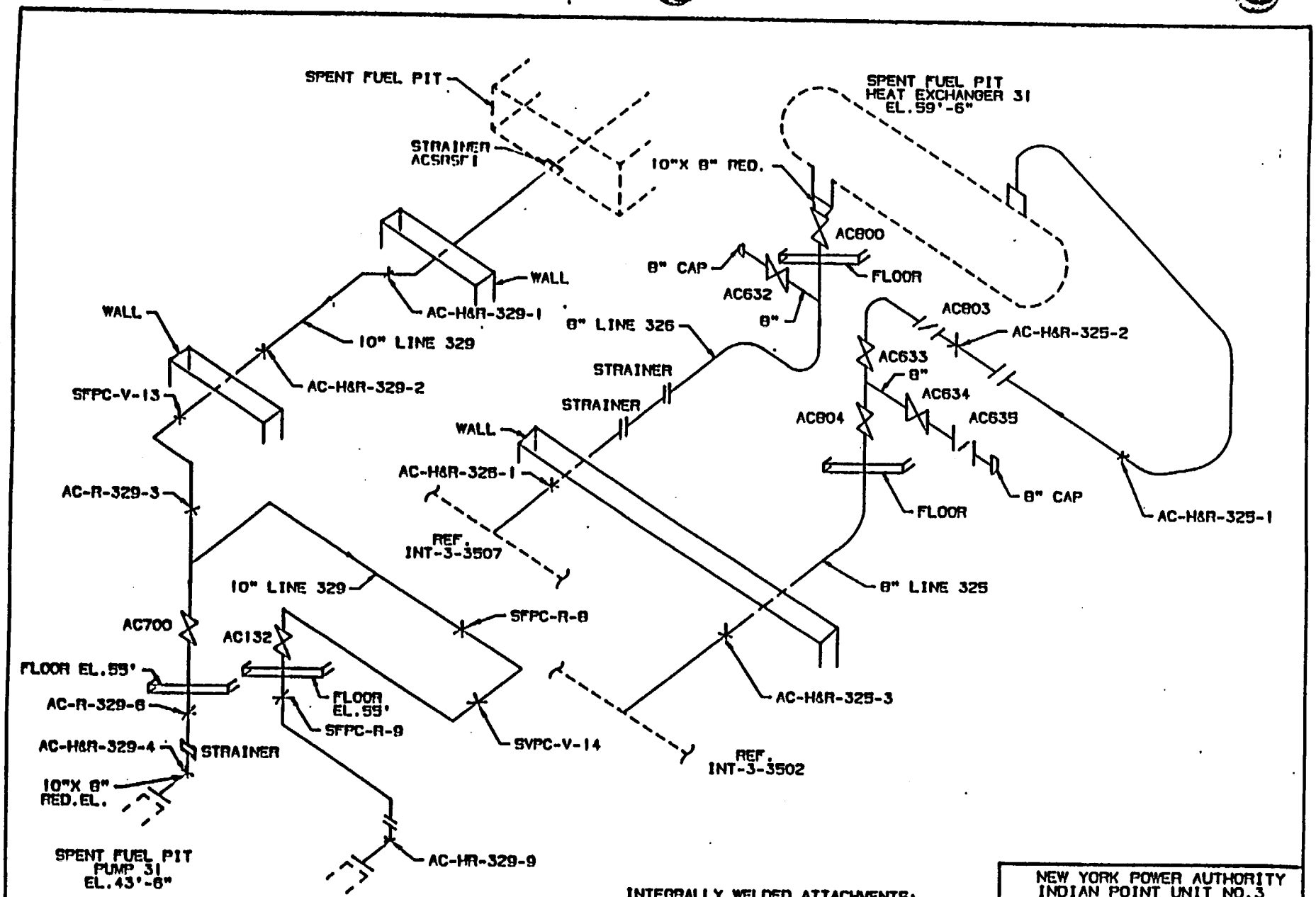

INTEGRALLY WELDED ATTACHMENTS:
AC-H&R-329-4
AC-HR-329-9

NOTE: AC-H&R-326-1 AND AC-H&R-325-3 LOCATED ON FLOOR EL. 41' OF PAB.

NEW YORK POWER AUTHORITY INDIAN POINT UNIT NO.3	
SPENT FUEL PIT COOLING WATER 10" LINE 329, 8" LINE 325 & 8" LINE 326	
INT-3-3601	REV. 1

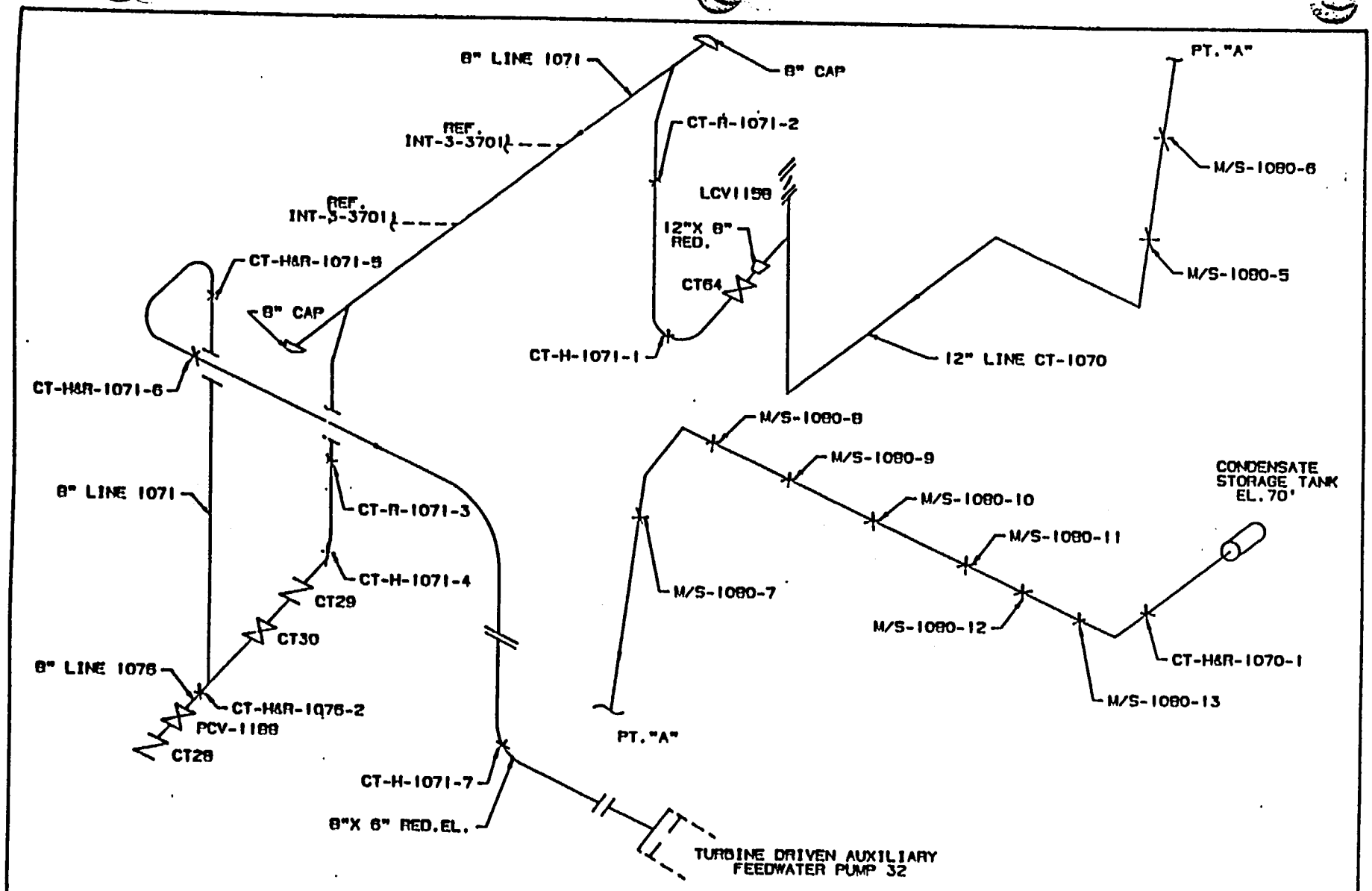

NEW YORK POWER AUTHORITY
INDIAN POINT UNIT NO.3

AUXILIARY FEEDPUMP
12" LINE CT-1070, 8" LINE 1076
& 8" LINE 1071

INT-3-3700 | REV. 0

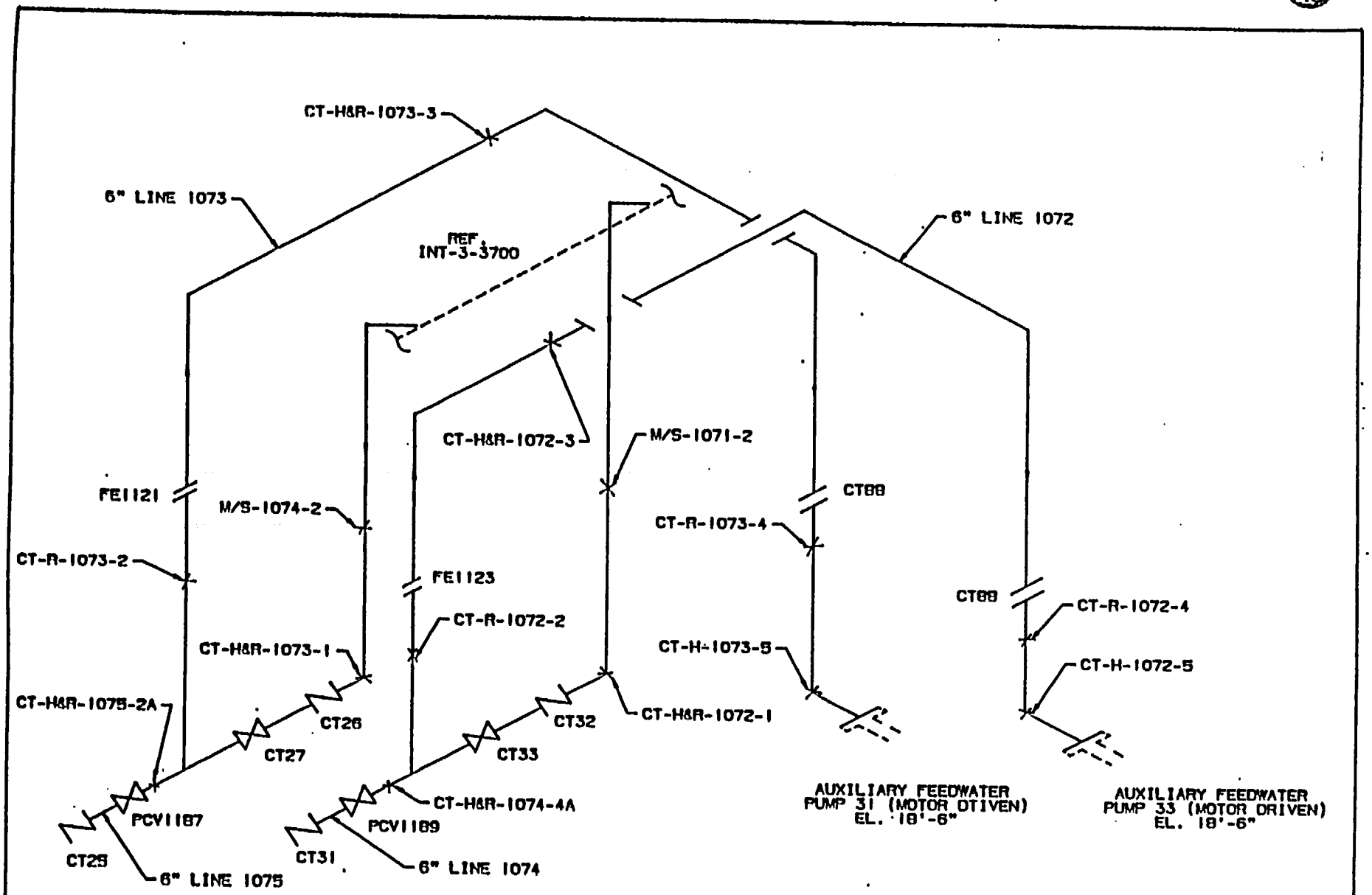

INTEGRALLY WELDED ATTACHMENTS:
CT-H&R-1072-1
CT-H-1072-5
CT-H&R-1073-1
CT-H-1073-5

NEW YORK POWER AUTHORITY INDIAN POINT UNIT NO.3	
AUXILIARY FEEDPUMP 6" LINE 1072, 6" LINE 1073, 6" LINE 1074 & 6" LINE 1075	
INT-3-3701	REV. 1

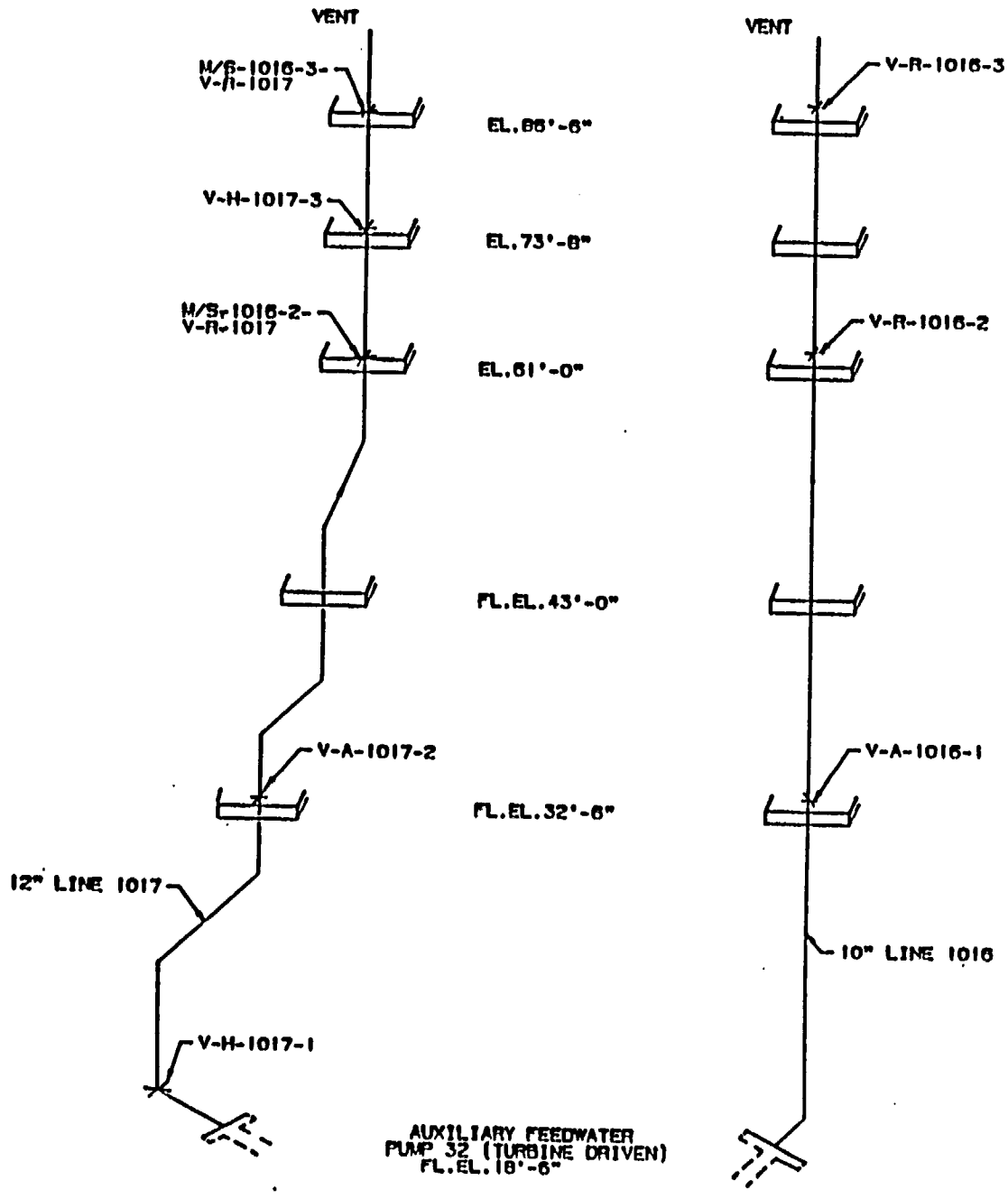

NEW YORK POWER AUTHORITY INDIAN POINT UNIT NO.3	
AUXILIARY FEEDPUMP 12" LINE 1017 & 10" LINE 1016	
INT-3-3702	REV. 0

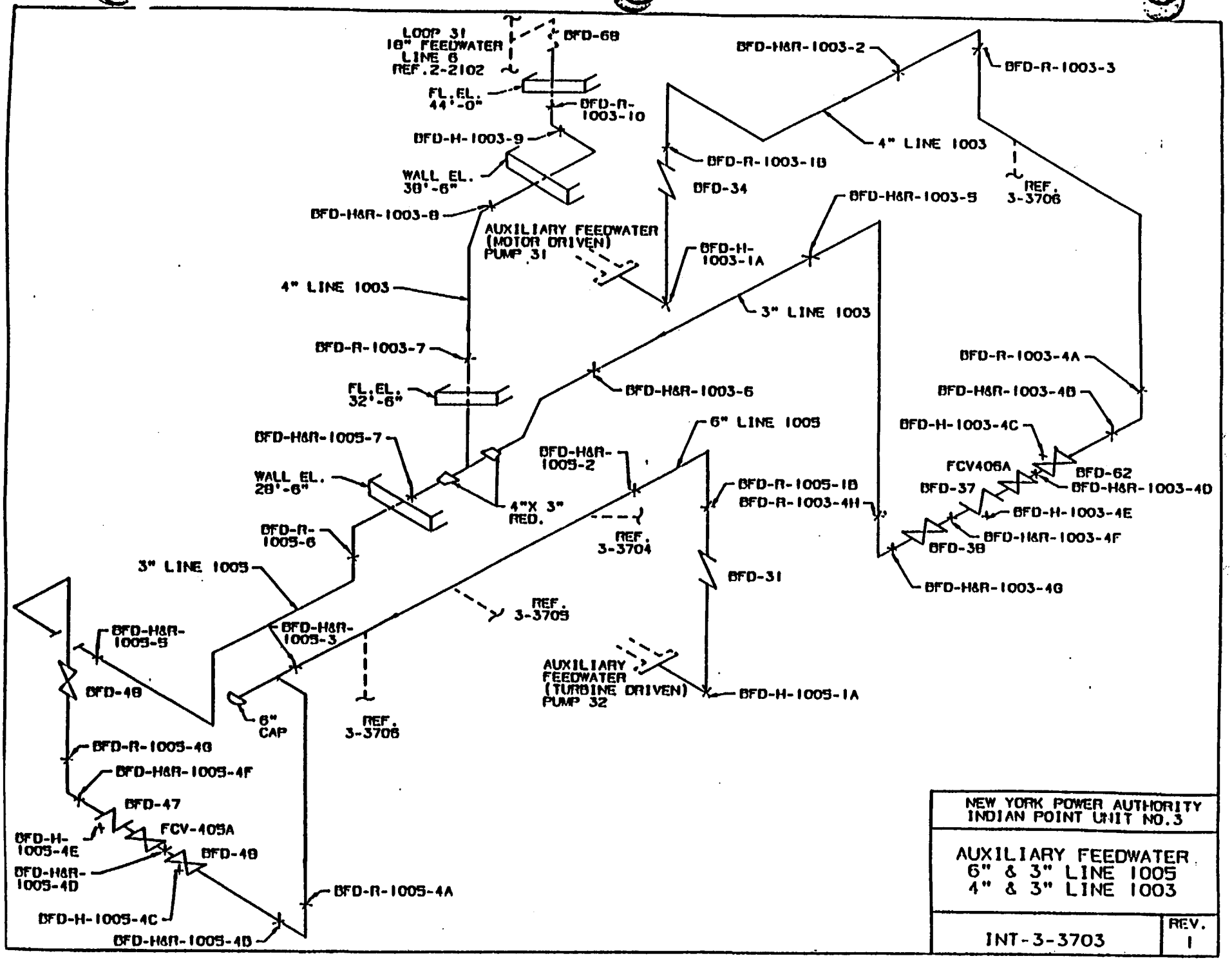

NEW YORK POWER AUTHORITY
INDIAN POINT UNIT NO.3

AUXILIARY FEEDWATER
6" & 3" LINE 1005
4" & 3" LINE 1003

INT-3-3703

REV. 1

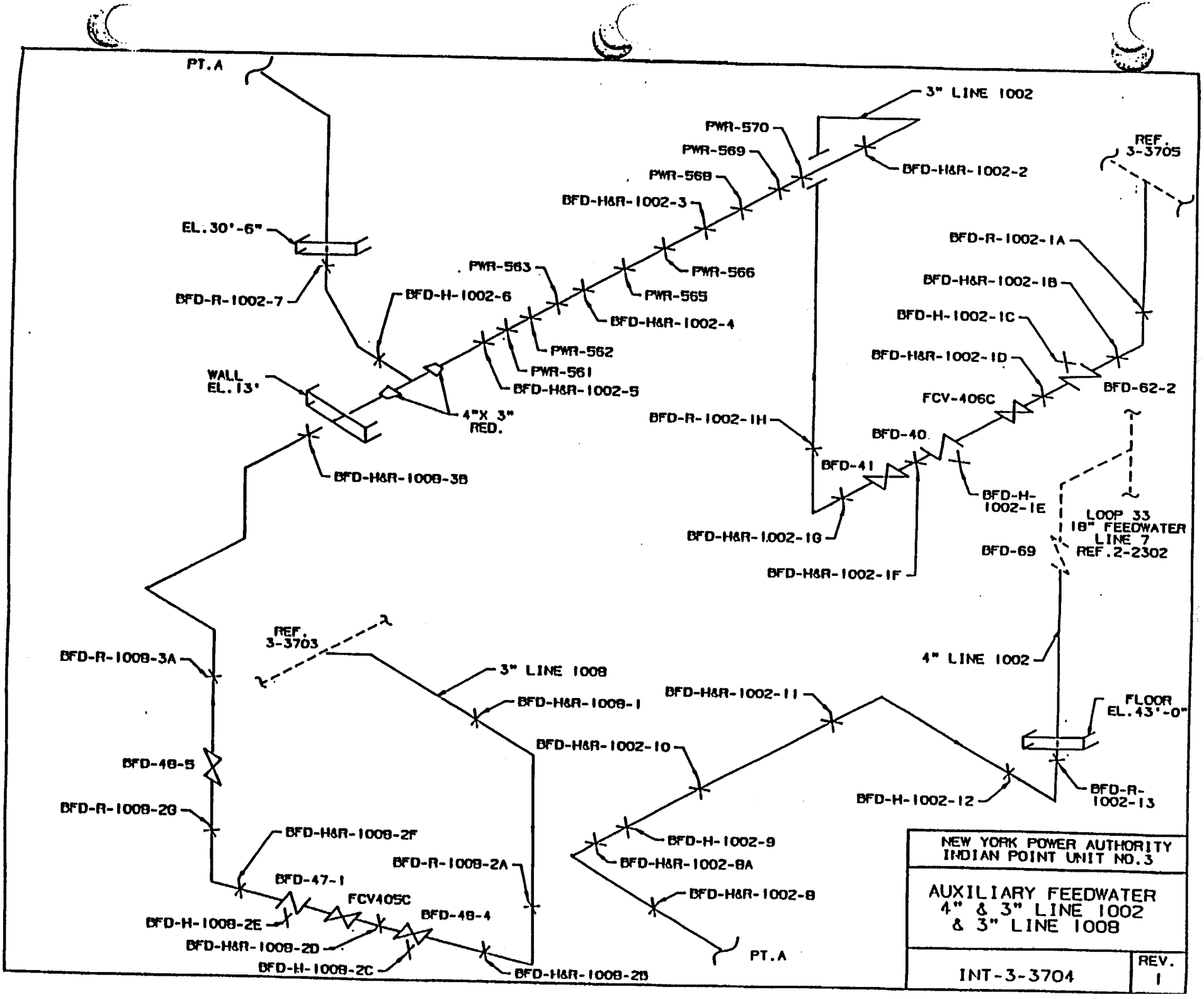
PT.A
3" LINE 1002
PWR-570
PWR-569
PWR-568
BFD-H&R-1002-2
REF. 3-3705
BFD-H&R-1002-3
EL.30'-6"
BFD-R-1002-1A
PWR-563
PWR-566
BFD-H&R-1002-1B
BFD-R-1002-7
BFD-H-1002-6
PWR-565
BFD-H-1002-1C
BFD-H&R-1002-4
PWR-562
BFD-H&R-1002-1D
WALL EL.13'
PWR-561
BFD-H&R-1002-5
BFD-62-2
FCV-406C
4"X 3" RED.
BFD-R-1002-1H
BFD-40
BFD-41
BFD-H&R-1008-3B
BFD-H-1002-1E
LOOP 33 18" FEEDWATER LINE 7 REF.2-2302
BFD-H&R-1002-1G
BFD-69
BFD-H&R-1002-1F
REF. 3-3703
BFD-R-1008-3A
3" LINE 1008
4" LINE 1002
BFD-H&R-1002-11
BFD-H&R-1008-1
FLOOR EL.43'-0"
BFD-H&R-1002-10
BFD-48-5
BFD-R-1008-2G
BFD-H-1002-12
BFD-R-1002-13
BFD-H&R-1008-2F
BFD-H-1002-9
BFD-R-1008-2A
BFD-H&R-1002-8A
BFD-47-1
BFD-H&R-1002-8
FCV405C
BFD-48-4
BFD-H-1008-2E
BFD-H&R-1008-2D
BFD-H-1008-2C
BFD-H&R-1008-2B
PT.A
NEW YORK POWER AUTHORITY
INDIAN POINT UNIT NO.3
AUXILIARY FEEDWATER
4" & 3" LINE 1002
& 3" LINE 1008
INT-3-3704
REV.
1

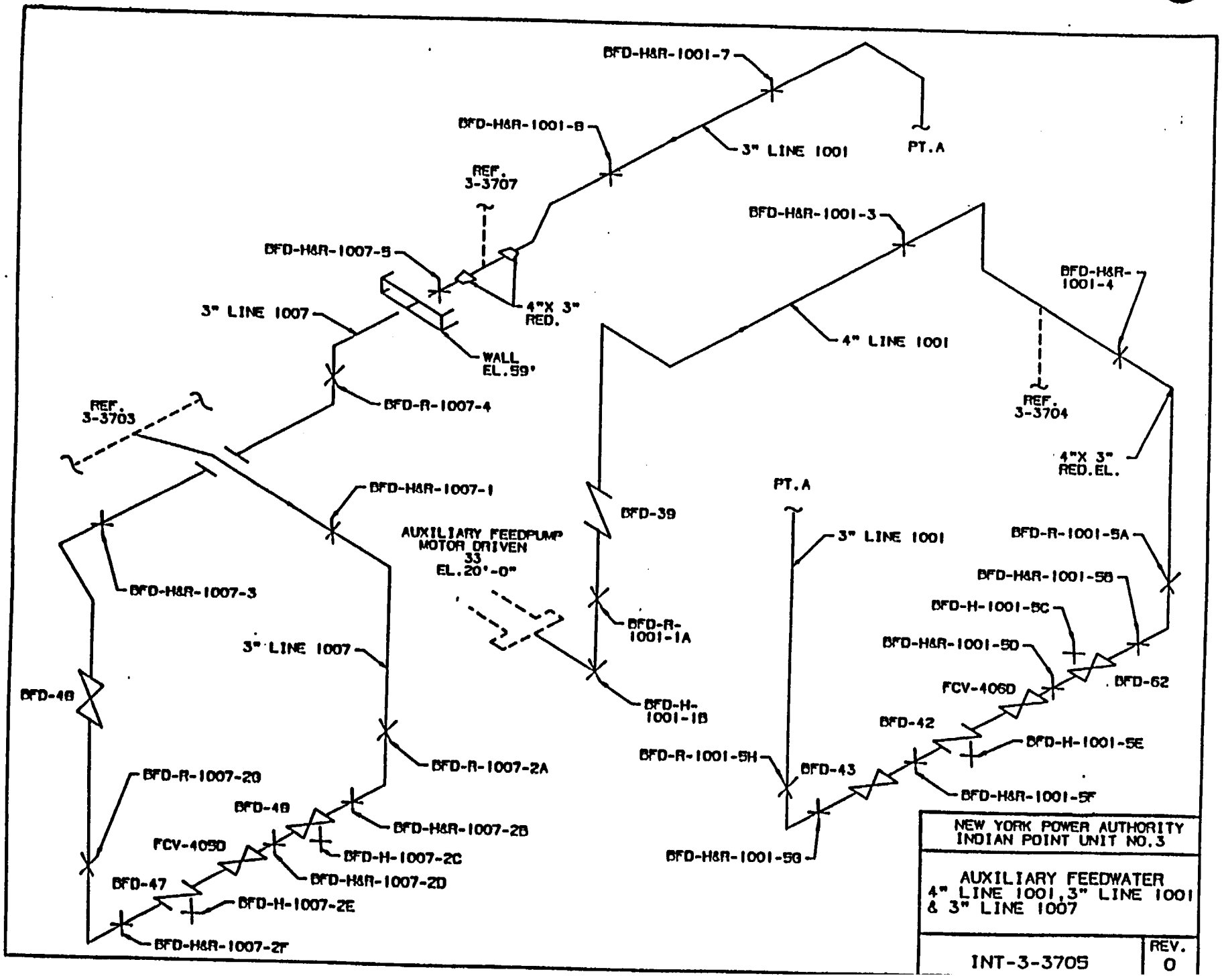
BFD-H&R-1001-7
BFD-H&R-1001-8
3" LINE 1001
PT.A
REF. 3-3707
BFD-H&R-1001-3
BFD-H&R-1007-5
4"X 3" RED.
3" LINE 1007
WALL EL.59'
4" LINE 1001
BFD-H&R-1001-4
REF. 3-3704
BFD-R-1007-4
REF. 3-3703
4"X 3" RED.EL.
BFD-H&R-1007-1
PT.A
BFD-39
3" LINE 1001
BFD-R-1001-5A
AUXILIARY FEEDPUMP MOTOR DRIVEN 33 EL.20'-0"
BFD-H&R-1001-5B
BFD-H&R-1007-3
BFD-H-1001-5C
BFD-R-1001-1A
BFD-H&R-1001-5D
3" LINE 1007
BFD-62
FCV-406D
BFD-48
BFD-H-1001-1B
BFD-42
BFD-H-1001-5E
BFD-R-1001-5H
BFD-43
BFD-R-1007-2A
BFD-R-1007-2G
BFD-H&R-1001-5F
BFD-49
BFD-H&R-1007-2B
FCV-405D
BFD-H-1007-2C
BFD-H&R-1001-5G
BFD-H&R-1007-2D
BFD-47
BFD-H-1007-2E
BFD-H&R-1007-2F
NEW YORK POWER AUTHORITY
INDIAN POINT UNIT NO.3
AUXILIARY FEEDWATER
4" LINE 1001,3" LINE 1001
& 3" LINE 1007
INT-3-3705
REV.
0

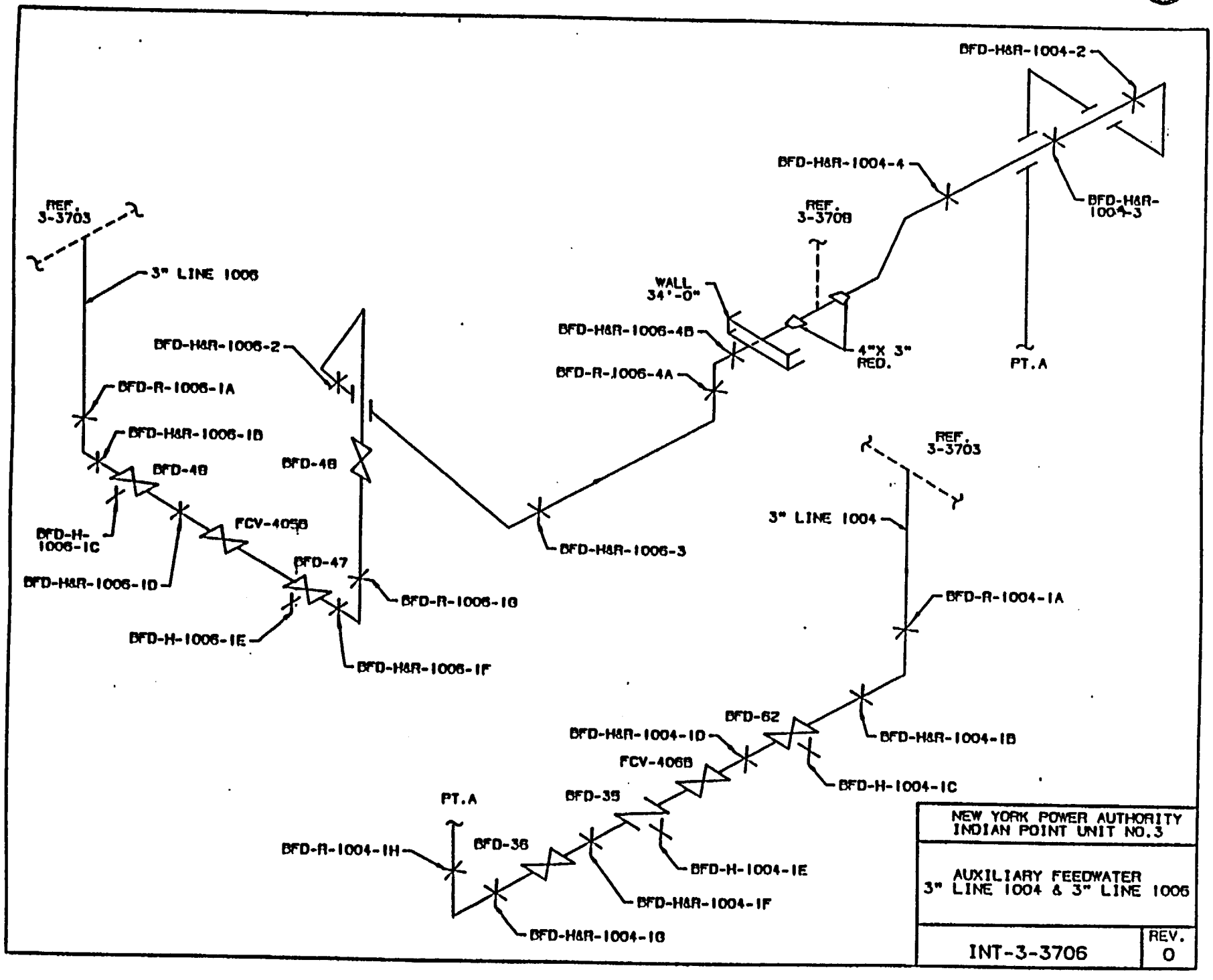
BFD-H&R-1004-2
BFD-H&R-1004-4
BFD-H&R-1004-3
REF. 3-3708
REF. 3-3703
3" LINE 1006
WALL 34'-0"
BFD-H&R-1006-4B
4"X 3" RED.
PT.A
BFD-H&R-1006-2
BFD-R-1006-4A
BFD-R-1006-1A
BFD-H&R-1006-1B
BFD-46
BFD-48
REF. 3-3703
3" LINE 1004
FCV-405B
BFD-H-1006-1C
BFD-H&R-1006-3
BFD-47
BFD-H&R-1006-1D
BFD-R-1006-1G
BFD-R-1004-1A
BFD-H-1006-1E
BFD-H&R-1006-1F
BFD-62
BFD-H&R-1004-1D
BFD-H&R-1004-1B
FCV-406B
BFD-H-1004-1C
PT.A
BFD-35
BFD-R-1004-1H
BFD-36
BFD-H-1004-1E
BFD-H&R-1004-1F
BFD-H&R-1004-1G
NEW YORK POWER AUTHORITY
INDIAN POINT UNIT NO.3
AUXILIARY FEEDWATER
3" LINE 1004 & 3" LINE 1006
INT-3-3706
REV.
0

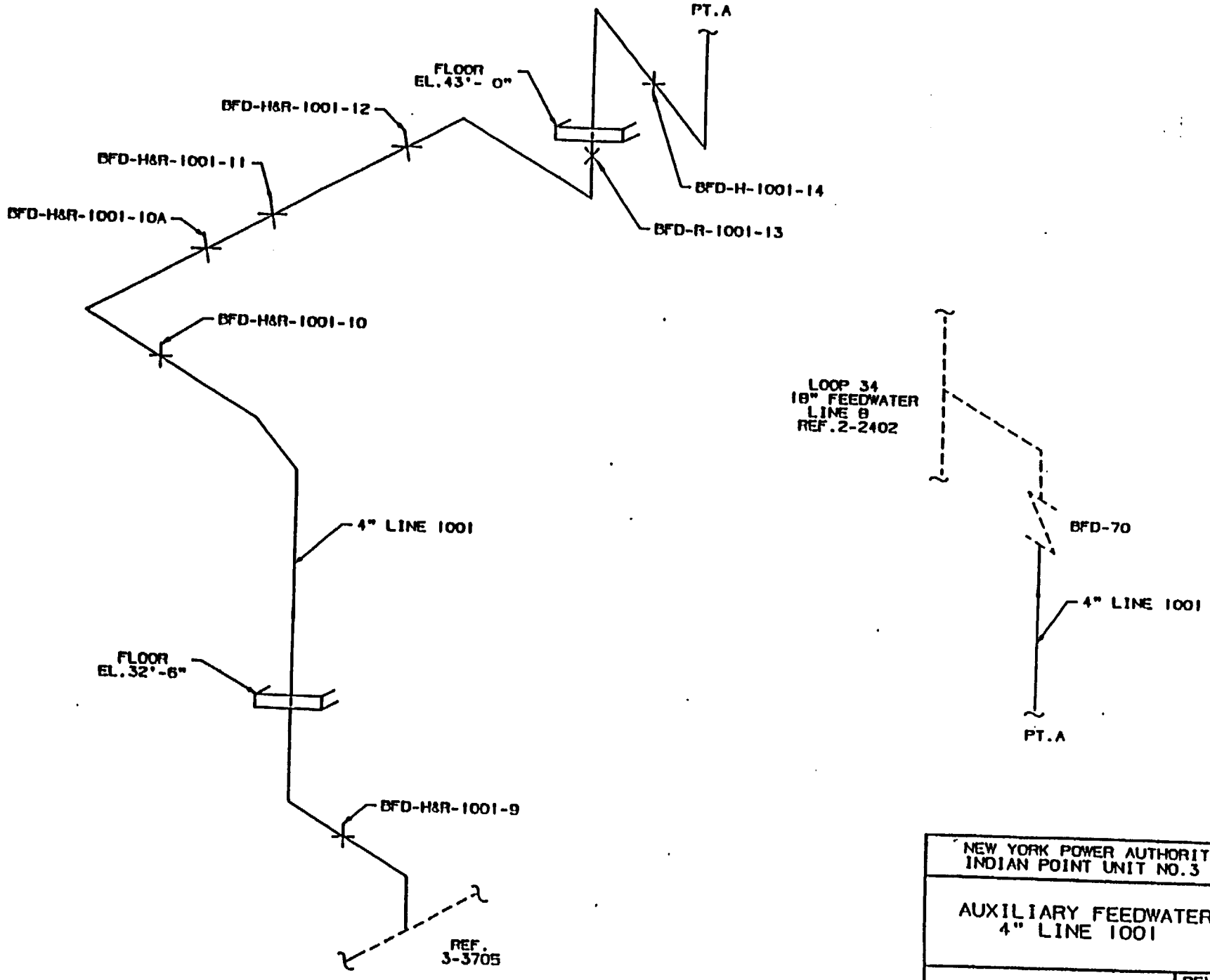

NEW YORK POWER AUTHORITY
INDIAN POINT UNIT NO.3

AUXILIARY FEEDWATER
4" LINE 1001

INT-3-3707

REV.
1

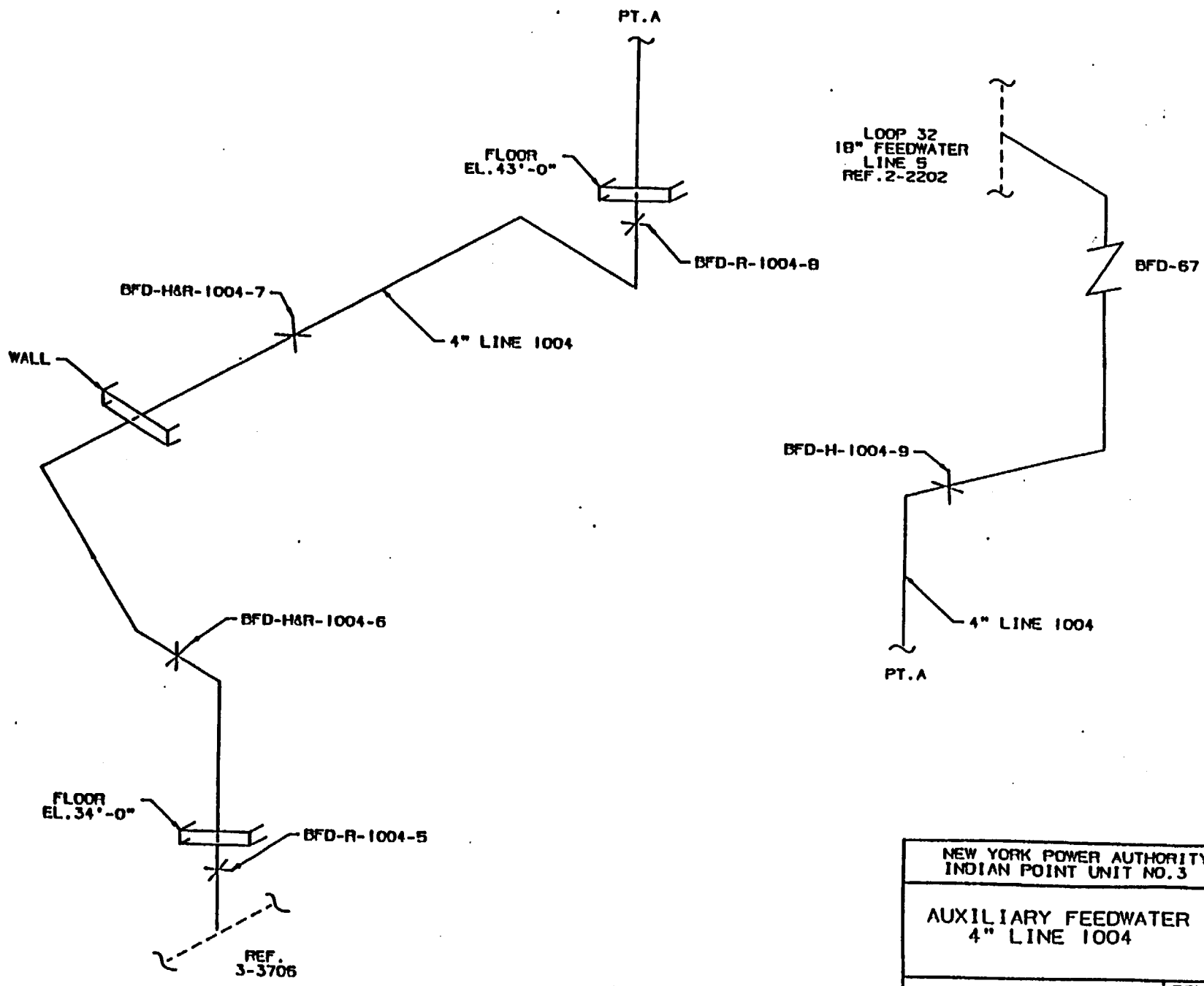

NEW YORK POWER AUTHORITY
INDIAN POINT UNIT NO.3

AUXILIARY FEEDWATER
4" LINE 1004

INT-3-3708

REV.
1

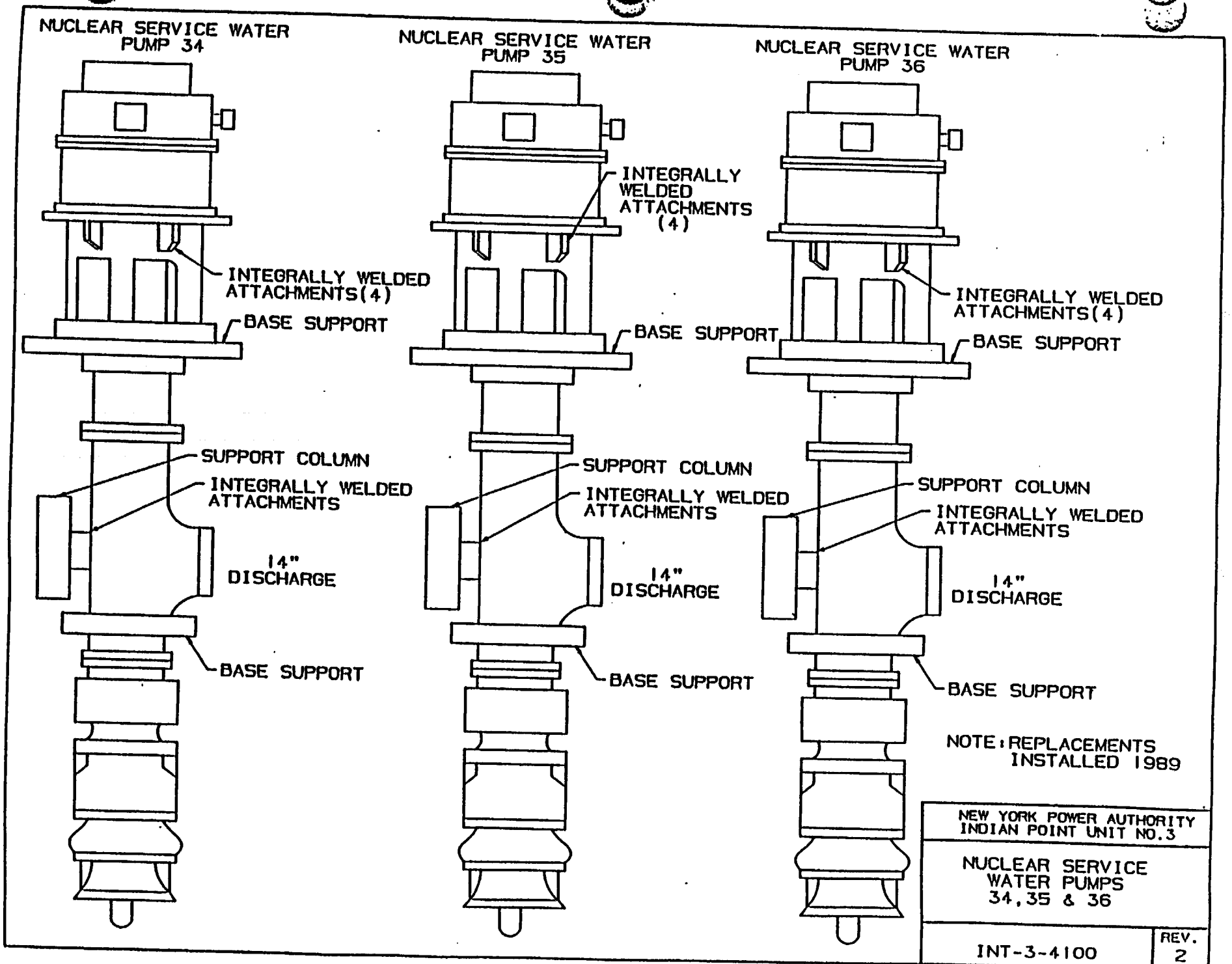
NUCLEAR SERVICE WATER PUMP 34
INTEGRALLY WELDED ATTACHMENTS(4)
BASE SUPPORT
SUPPORT COLUMN
INTEGRALLY WELDED ATTACHMENTS
14" DISCHARGE
BASE SUPPORT
NUCLEAR SERVICE WATER PUMP 35
INTEGRALLY WELDED ATTACHMENTS (4)
BASE SUPPORT
SUPPORT COLUMN
INTEGRALLY WELDED ATTACHMENTS
14" DISCHARGE
BASE SUPPORT
NUCLEAR SERVICE WATER PUMP 36
INTEGRALLY WELDED ATTACHMENTS(4)
BASE SUPPORT
SUPPORT COLUMN
INTEGRALLY WELDED ATTACHMENTS
14" DISCHARGE
BASE SUPPORT
NOTE: REPLACEMENTS INSTALLED 1989
NEW YORK POWER AUTHORITY
INDIAN POINT UNIT NO.3
NUCLEAR SERVICE WATER PUMPS 34, 35 & 36
INT-3-4100
REV. 2

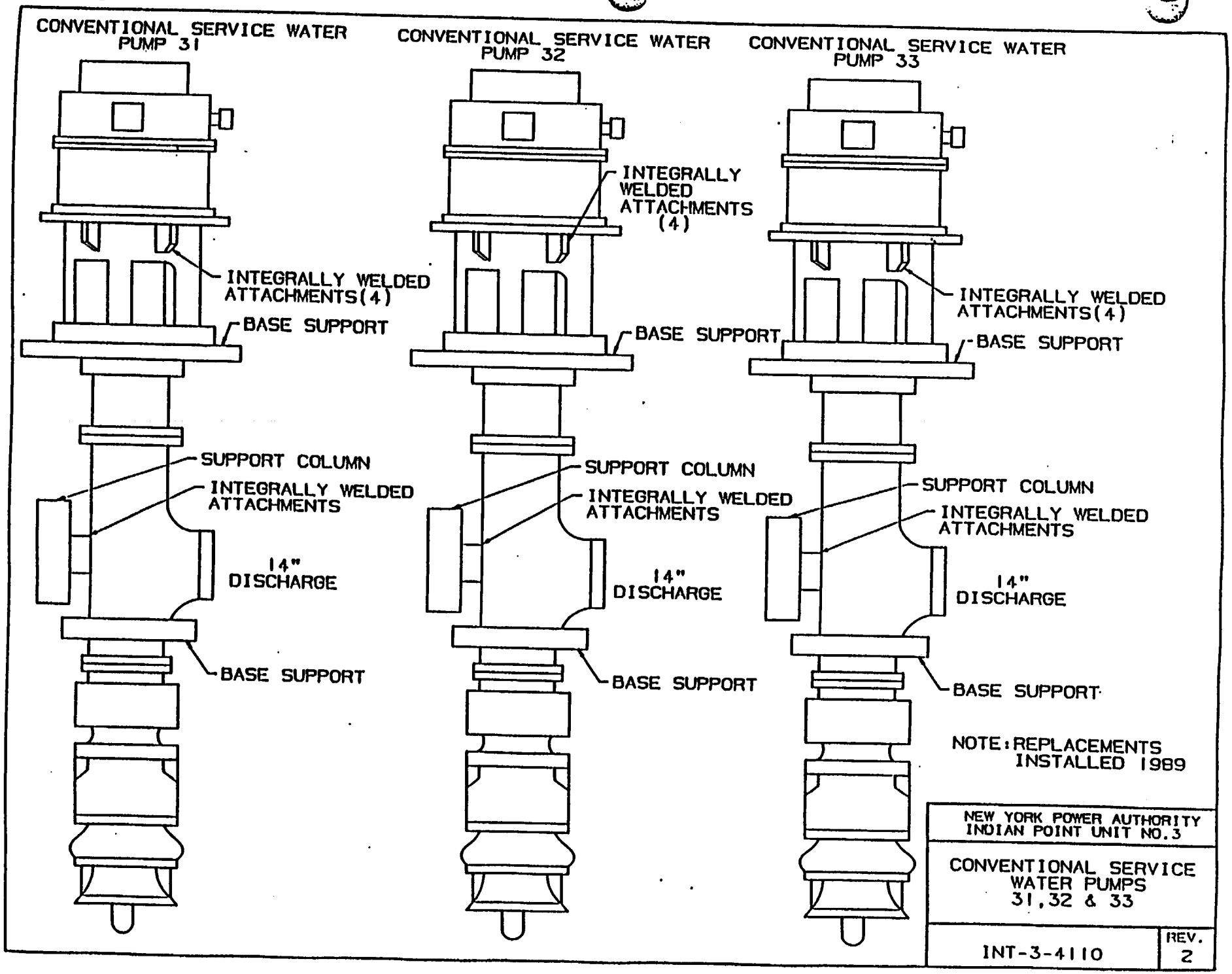
CONVENTIONAL SERVICE WATER PUMP 31
INTEGRALLY WELDED ATTACHMENTS(4)
BASE SUPPORT
SUPPORT COLUMN
INTEGRALLY WELDED ATTACHMENTS
14" DISCHARGE
BASE SUPPORT
CONVENTIONAL SERVICE WATER PUMP 32
INTEGRALLY WELDED ATTACHMENTS (4)
BASE SUPPORT
SUPPORT COLUMN
INTEGRALLY WELDED ATTACHMENTS
14" DISCHARGE
BASE SUPPORT
CONVENTIONAL SERVICE WATER PUMP 33
INTEGRALLY WELDED ATTACHMENTS(4)
BASE SUPPORT
SUPPORT COLUMN
INTEGRALLY WELDED ATTACHMENTS
14" DISCHARGE
BASE SUPPORT
NOTE: REPLACEMENTS INSTALLED 1989
NEW YORK POWER AUTHORITY
INDIAN POINT UNIT NO.3
CONVENTIONAL SERVICE WATER PUMPS 31,32 & 33
INT-3-4110
REV. 2

BORIC ACID TRANSFER PUMP CSAPBA1-31

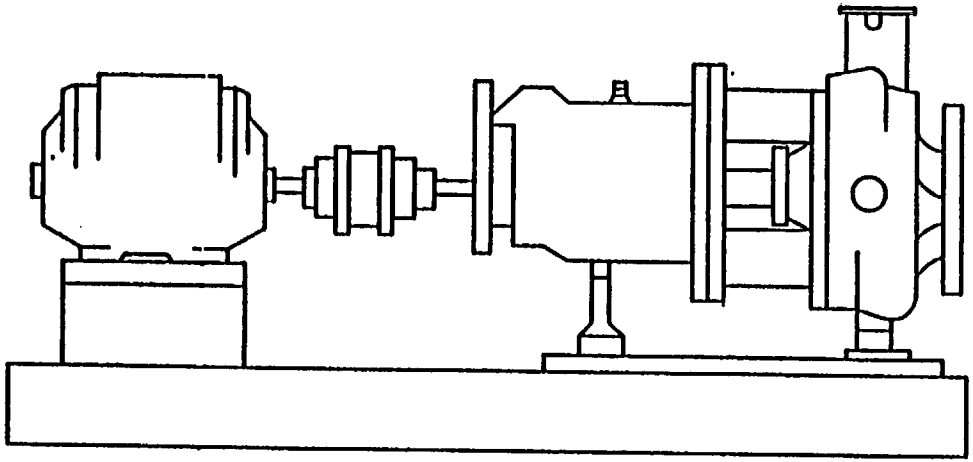

BORIC ACID TRANSFER PUMP CSAPBA2-32

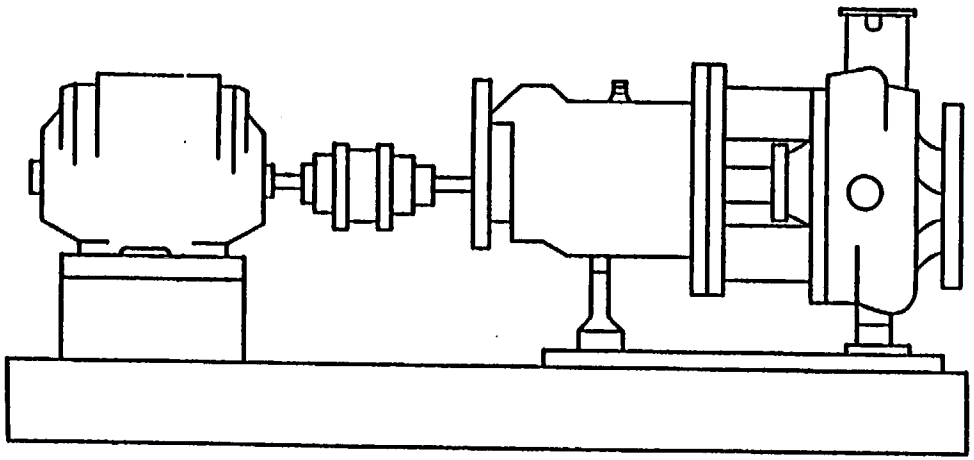

NEW YORK POWER AUTHORITY INDIAN POINT UNIT NO.3	
BORIC ACID TRANSFER PUMPS. CSAPBA1-31 & CSAPBA2-32	
INT-3-4120	REV. 0

COMPONENT COOLING PUMP ACAPCC1-31

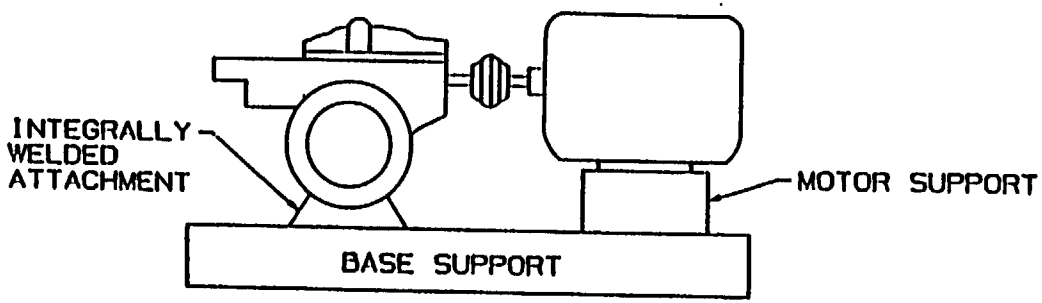

COMPONENT COOLING PUMP ACAPCC2-32

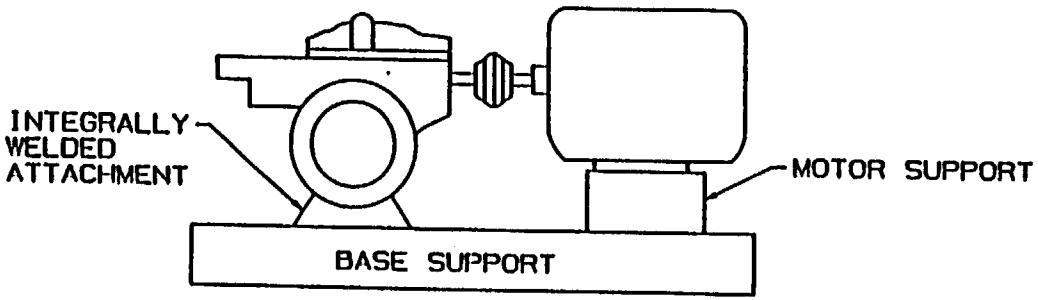

COMPONENT COOLING PUMP ACAPCC3-33

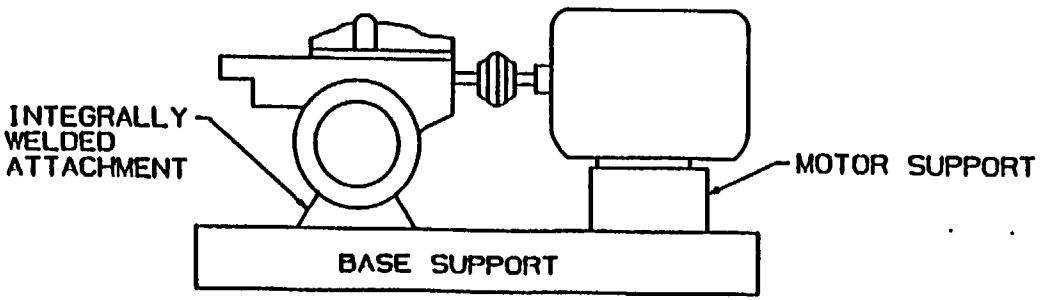

NEW YORK POWER AUTHORITY INDIAN POINT UNIT NO.3	
COMPONENT COOLING PUMPS ACAPCC1-31, ACAPCC2-32 & ACAPCC3-33	
INT-3-4130	REV. 1

AUXILIARY FEEDWATER PUMP (MOTOR DRIVEN) 31

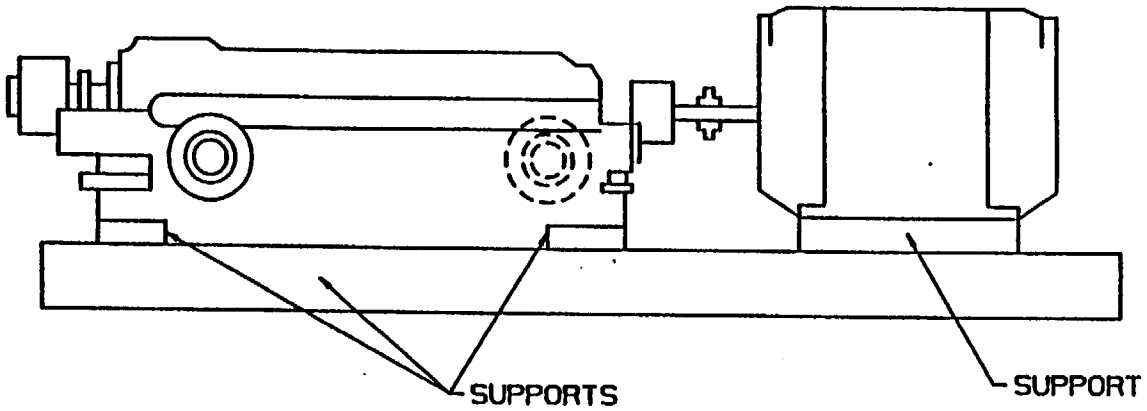

AUXILIARY FEEDWATER PUMP (MOTOR DRIVEN) 33

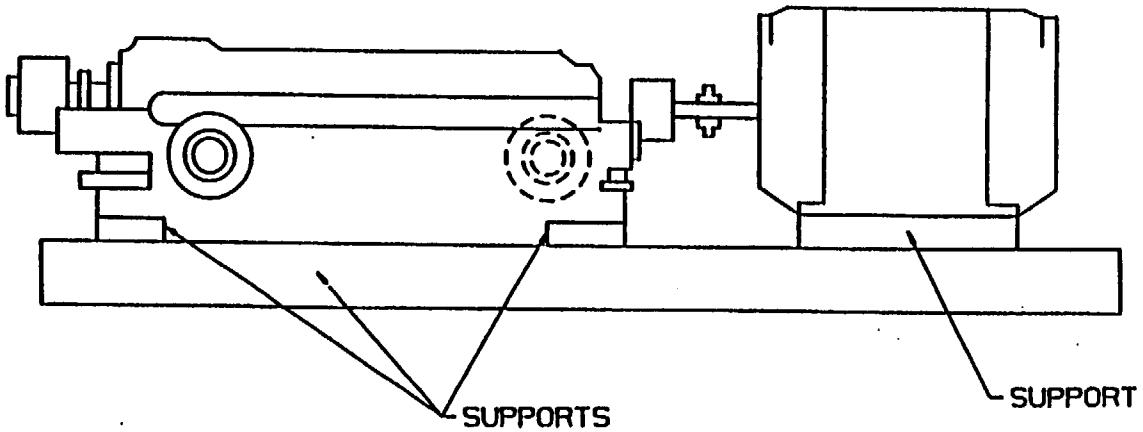

NOTE: LOCATION 18' AUXILIARY FEEDPUMP BUILDING

NEW YORK POWER AUTHORITY INDIAN POINT UNIT NO.3	
AUXILIARY FEEDWATER PUMPS (MOTOR DRIVEN) 31 & 33	
INT-3-4140	REV. 1

AUXILIARY FEEDWATER PUMP (TURBINE DRIVEN) 32

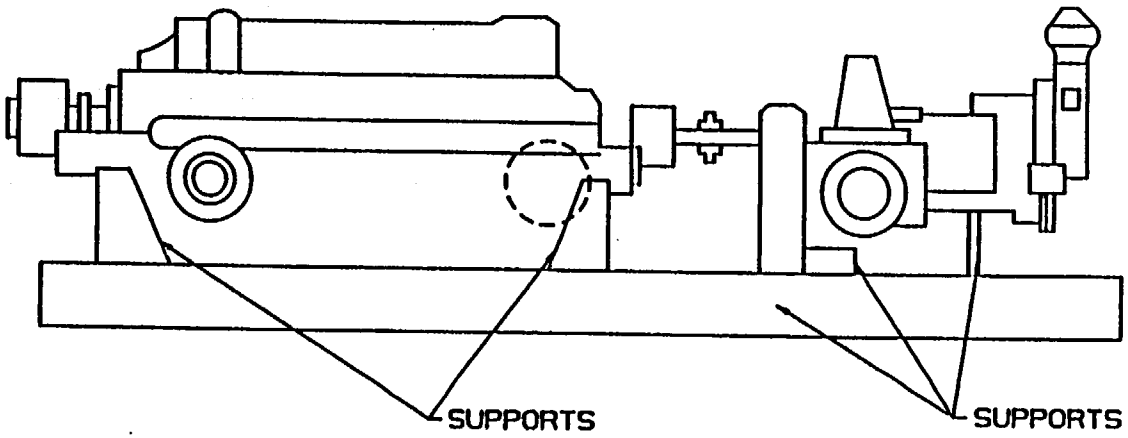

NOTE: LOCATION 18' AUXILIARY FEEDPUMP BUILDING

NEW YORK POWER AUTHORITY INDIAN POINT UNIT NO.3	
AUXILIARY FEEDWATER PUMP (TURBINE DRIVEN) 32	
INT-3-4150	REV. 1

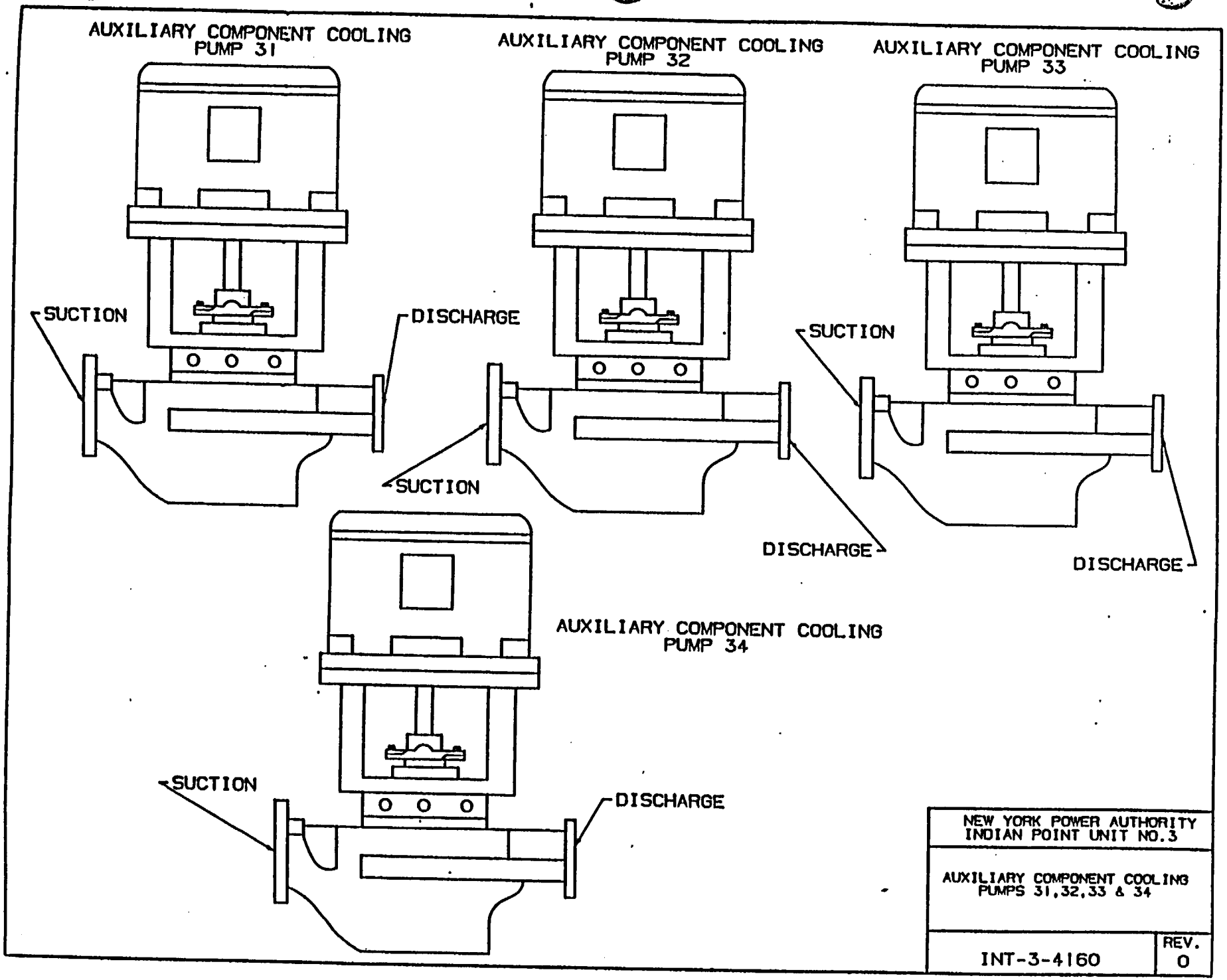
AUXILIARY COMPONENT COOLING PUMP 31
SUCTION
DISCHARGE
AUXILIARY COMPONENT COOLING PUMP 32
SUCTION
DISCHARGE
AUXILIARY COMPONENT COOLING PUMP 33
SUCTION
DISCHARGE
AUXILIARY COMPONENT COOLING PUMP 34
SUCTION
DISCHARGE
NEW YORK POWER AUTHORITY
INDIAN POINT UNIT NO.3
AUXILIARY COMPONENT COOLING PUMPS 31,32,33 & 34
INT-3-4160
REV.
0

SPENT FUEL PIT PUMP ACAPSF1-31

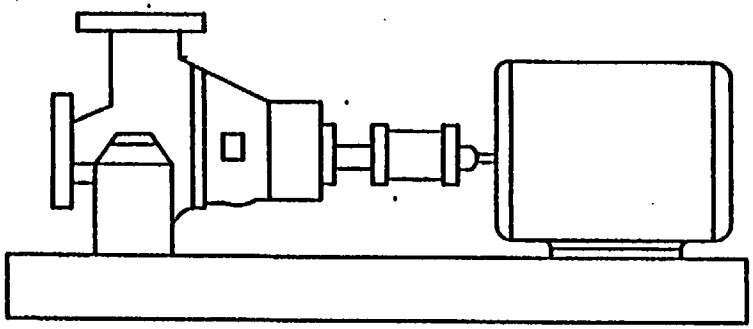

SPENT FUEL PIT STRAINER ACSRF1*

*UNDERWATER: NO SUPPORTS OR HANGERS

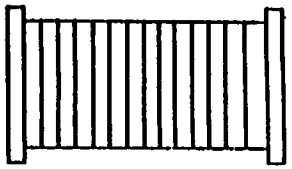

SPENT FUEL PIT PUMP ACAPSF2-32

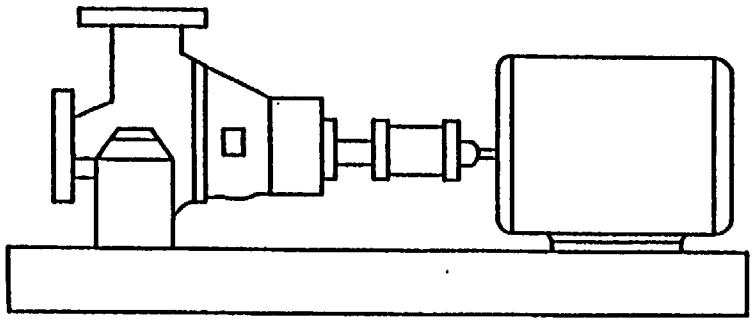

NEW YORK POWER AUTHORITY INDIAN POINT UNIT NO.3	
SPENT FUEL PIT PUMPS ACAPSF1-31 & ACAPSF2-32 SPENT FUEL PIT STRAINER ACSRSF1	
INT-3-4170	REV. 2

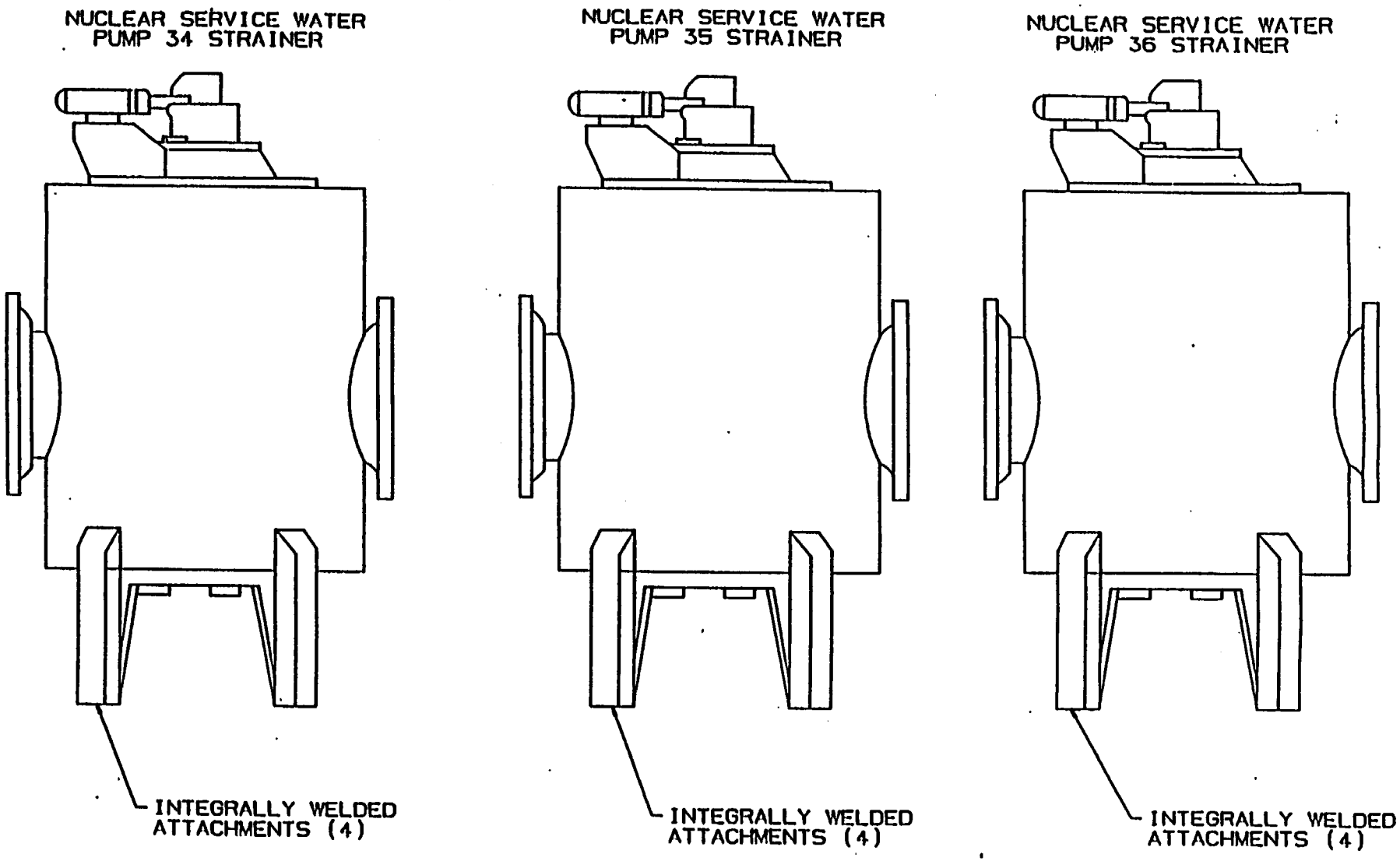

NEW YORK POWER AUTHORITY INDIAN POINT UNIT NO.3	
NUCLEAR SERVICE WATER PUMPS 34, 35 & 36 STRAINERS	
INT-3-4180	REV. 2

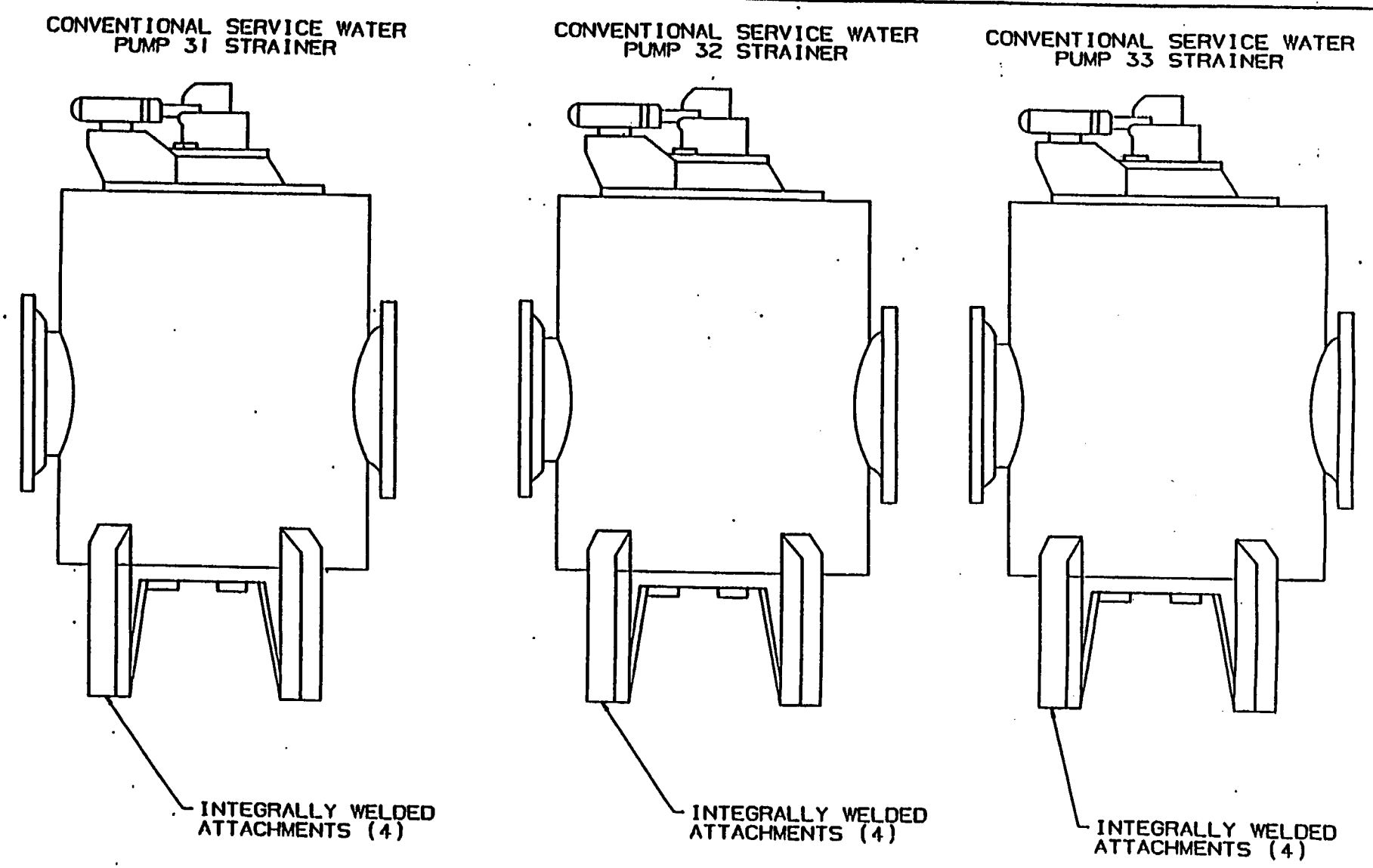

NEW YORK POWER AUTHORITY INDIAN POINT UNIT NO.3	
CONVENTIONAL SERVICE WATER PUMPS 31,32 & 33 STRAINERS	
INT-3-4190	REV. 2