Appendix E

HEMYC INSTALLATION PROCEDURES

ISSUE DESIGNATION IN THIS COLL 'NDICATES CURRENT CHANGE

FABRICATION OF HEMYC PROTECTIVE WRAP SYSTEM COMPONENTS

1.0 PURPOSE

The purpose of this procedure is to assure that the fabrication of the HEMYC Cable Protection System Components is consistent with the system components as tested in the various qualification tests. The Fire Qualification Test, referenced as CTP-1026, consisted of a One (1) Hour Fire Exposure, per ASTM E-119 criteria, including hose stream in accordance with the American Nuclear Insurers Information Bulletin No. 5(79) entitled, "ANI/MAERP Standard Fire Endurance Test Method to Qualify a Protective Envelope for Class Circuits".

2.0 SCOPE

This procedure provides the methods and guidelines for the fabrication of both cable tray and conduit protection system components. The fabrication and quality verification shall be performed on-site by Client personnel that have been trained and certified by PROMATEC.

3.0 REFERENCE

3.1 10CFR50, Appendix R

3.2 ANI Bulletin No. 5(79)

3.3 HEMYC Fire Qualification Test, CTP-1026

3.4 ANI Acceptance dated 08/02/82

3.5 QCP-10001, Packaging, Shipping, Receiving, Handling and Storage for HEMYC Protective Wrap Components

3.6 QCP-10002, Fabrication Inspection for HEMYC Protective Wrap Components

3.7 HEMYC Protective Wrap System Typicals, PROMATEC Drawings B-310, B-311, B-312 and B-313

4.0 DEFINITIONS

None

5.0 RESPONSIBILITIES

5.1 The authorized Installer's ENGINEERING DEPARTMENT shall be responsible to define the scope of work as prescribed on the applicable contract documents and to provide the applicable drawings, specifications, requirements, instructions, etc., to the department responsible for fabrication and installation.

This department shall also be responsible to provide liaison with applicable client personnel and other internal departments to assure a smooth flow of communication.

5.2 The authorized Installer's PRODUCTION DEPARTMENT shall be responsible for the identification and scheduling of work to be performed as defined on the documents furnished by ENGINEERING.

The Installer's FABRICATION DEPARTMENT, as trained and certified by PROMATEC, shall be responsible for the initiation of appropriate Fabrication Orders, verify their authenticity, initiate appropriate procurement documents and provide these documents to the fabrication facility.

5.3 The Installer's QUALITY CONTROL PERSONNEL, as trained and certified by PROMATEC, shall be responsible for appropriate inspection, documentation and monitoring.

6.0 PROCEDURE

6.1 Only approved materials as listed below shall be utilized in the fabrication of HEMYC Cable Protection System Components.

ACCEPTABLE MATERIALS

6.1.1 External Fabric

A. Siltemp WR84CSR, Thermal Barrier Cloth, 0.030 nom. thickness, 18oz/yd^2

B. or Approved equal

6.1.2 Internal Fabric

A. Klever 600/6 or J.P. Stevens #332 Fiberglass Cloth, 49" width, 13oz/yd^2

B. or Approved equal (Internal fabric may be used on the non-fire side of protective blanket as necessary. If used, external fabric must overlap a minimum of six (6") inches on to non-fire side.

6.1.3 Internal Filler

A. Johns-Manville Cerablanket
6 or 8 lb density
0.5, 1.5 and/or 2.0 inch thickness

OR

B. Babcock & Wilcox Kaowool Ceramic Fiber Blanket
6 or 8 lb density
0.5, 1.5 and/or 2.0 inch thickness

OR

ISSUE DESIGNATION IN THIS COLUMN INDICATES CURRENT CHANGE

C. Approval equal

6.1.4 Thread

A. Astroquartz sewing thread Type Q-24 Teflon coated; approximately .020" diameter
Breaking Strength -- 20 lbs

OR

B. Alphaquartz sewing thread Type Q-24 Teflon coated; approximately .020" diameter
Breaking Strength -- 20 lbs

OR

C. Approved equal

6.2 Fabrication Order (Form QC-59)

6.2.1 The completed Fabrication Order (Form QC-59) shall be provided to the fabrication facility.

6.2.2 This form shall define information as listed below:

A. Fabrication Order

B. Blanket Number

C. Project Number

D. Project Name

E. Location -- building, room, elevation

F. Drawing Reference

G. Blanket Length

H. Width

I. Thickness ___0.5", ___1.5", ___2"

J. Tray Identification

K. Conduit Identification

L. Other -- General comments, description, etc.

M. Sketch -- Brief sketch as required

N. Client Acceptance

ISSUE DESIGNATION IN THIS COLL INDICATES CURRENT CHANGE

ISSUE DESIGNATION IN THIS COLUMN INDICATES CURRENT CHANGE

O. Certification

P. Ordered by and Date

Q. PROMATEC QA/QC Acceptance and Date

If any information is not required, N/A shall be inserted in the applicable area.

6.3 Manufacture of Protective Wrap Components

6.3.1 Initial Envelope Assembly (Figure 1)

6.3.1.1 Cut external and internal (if required) fabrics to proper dimensions - as defined by fabricator to assure proper finished dimensions as specified on the applicable fabrication order. As applicable, fabricator shall measure from the "finished" edge of fabrics not the "factory" edge.

6.3.1.2 Double stitch external and internal fabrics together as shown in Figure 1. If only external fabric is used double stitch fabric together as shown in Figure 1A.

6.3.1.3 Double stitch one end of blanket as shown in Figure 2/2B, if applicable. Fabricator may elect to insert blanket prior to closure of either end. In this case, refer to Item 6.3.3.2 for instructions.

During fabrication of wraps it may be necessary to use staples, pins or clips to hold fabrics together while sewing. These may remain within the system but shall not damage or be detrimental to the wrap.

6.3.1.4 Turn envelope assembly inside out to hide exposed rough edges of fabric and provide a "finished" seam appearance.

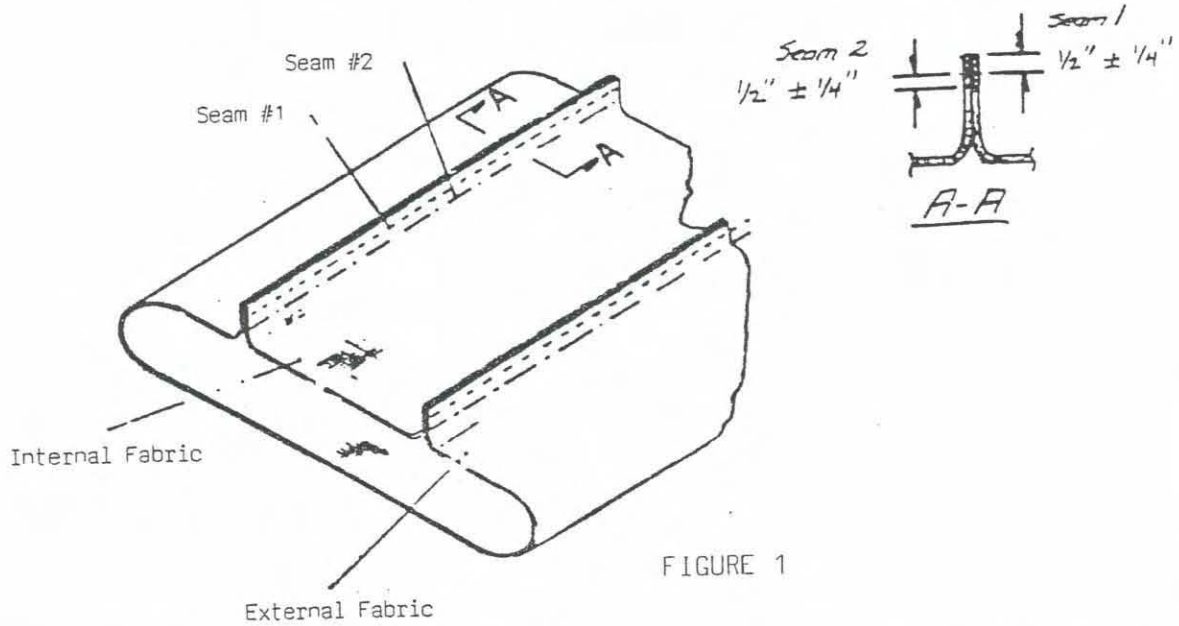

FIGURE 1

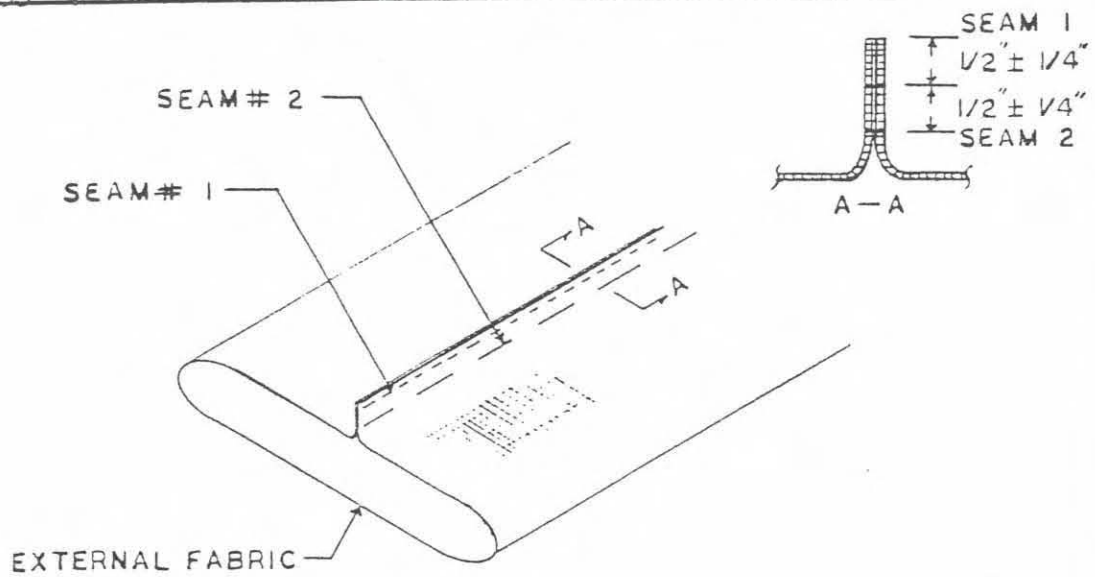

FIGURE 1A

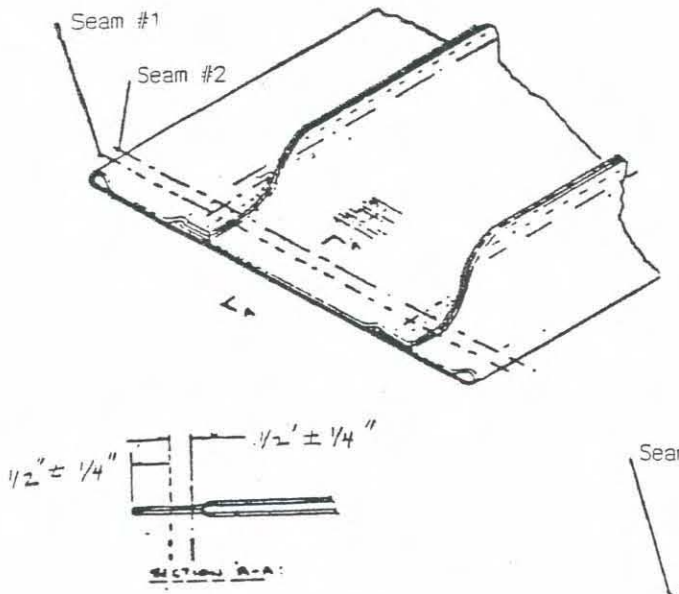

FIGURE 2

OR

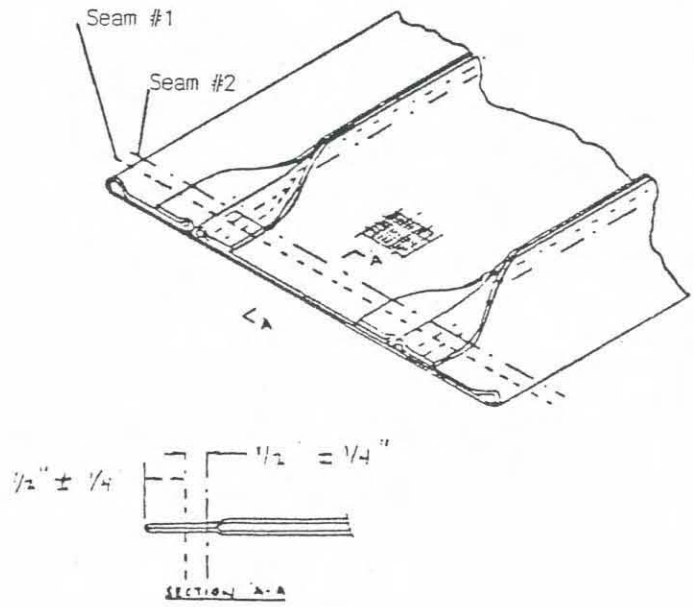

FIGURE 2B

ISSUE DESIGNATION IN THIS COLL .NDICATES CURRENT CHANGE

6.3.2 Insertion of Filler Material

6.3.2.1 Cut filler material to proper size (as defined by fabricator to assure proper finished dimension) 0.5" thick - HEMYC Wrap; 1.5" thick - Cable Tray; 2" thick - Conduit.

6.3.2.2 Multiple pieces of filler material may be required to fabricate wraps. To prevent joint gaps in filler material, trim pieces as shown in Figure 3 and secure "darts" spaced on maximum nine (9") inch centers for two (2") inch blankets or four (4") inch hand sewn seam (See Figure 4) for 0.5" and 1.5" blankets. Darts or seam shall be placed parallel to overlap pieces a minimum six (6") inches = 1" from center line of overlap.

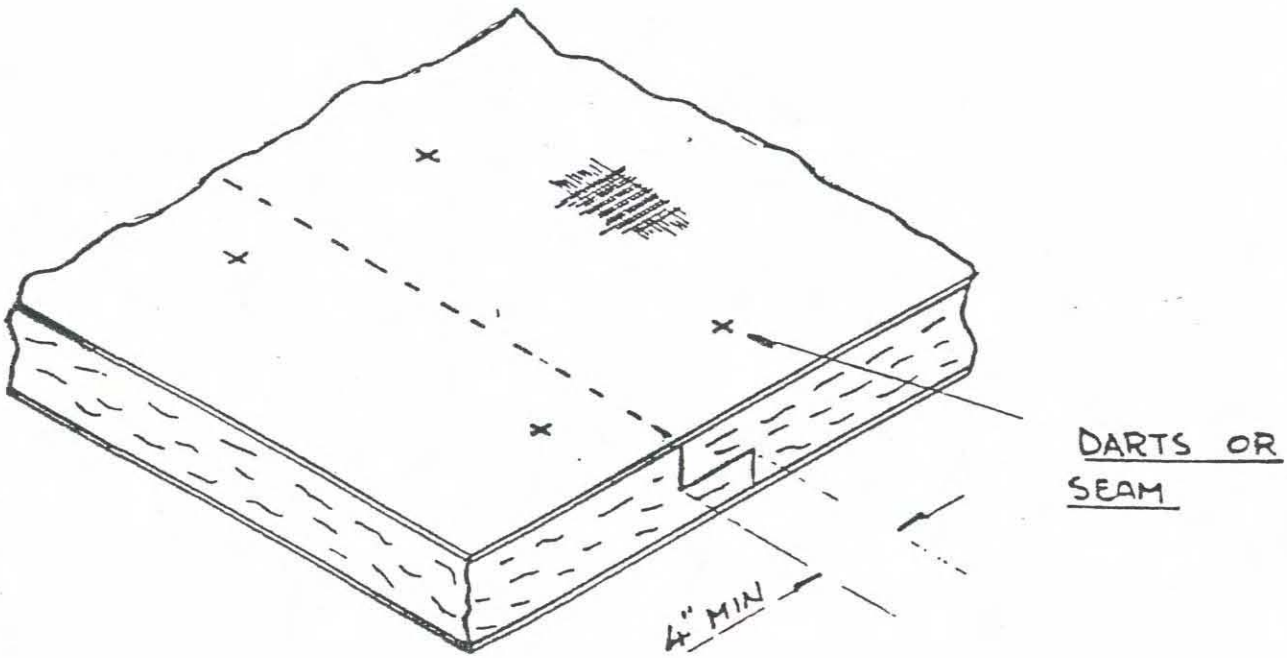

FIGURE 3

6.3.2.3 Insert filler material inside envelope assembly assuring that filler material is kept flat and occupies the entire interior of the envelope and is relatively tight.

6.3.2.4 If filler material has a tendency to "bunch up" during installation, the fabricator shall smooth by hand or use other means to assure total fill. Method used shall not cause damage or be detrimental to the Wrap System.

NOTE: If filler material appears to be too large creating "puckers" at

ISSUE DESIGNATION IN THIS COLL INDICATES CURRENT CHANGE

stitches, remove filler material and trim as necessary.

6.3.3 Completion of Envelope Assembly

6.3.3.1 Roll under fabric at open end and double stitch as shown in Figure 4A.

6.3.3.2 If both ends were left open until insertion of filler material, both ends shall now be closed as shown in Figure 4A.

6.3.4 Longitudinal Stitching

6.3.4.1 Longitudinal stitching shall be performed as shown in Figure 4. When multiple widths of filler material are required (Item 6.3.2.2) a minimum of two (2) rows of longitudinal stitches must be in each multiple width.

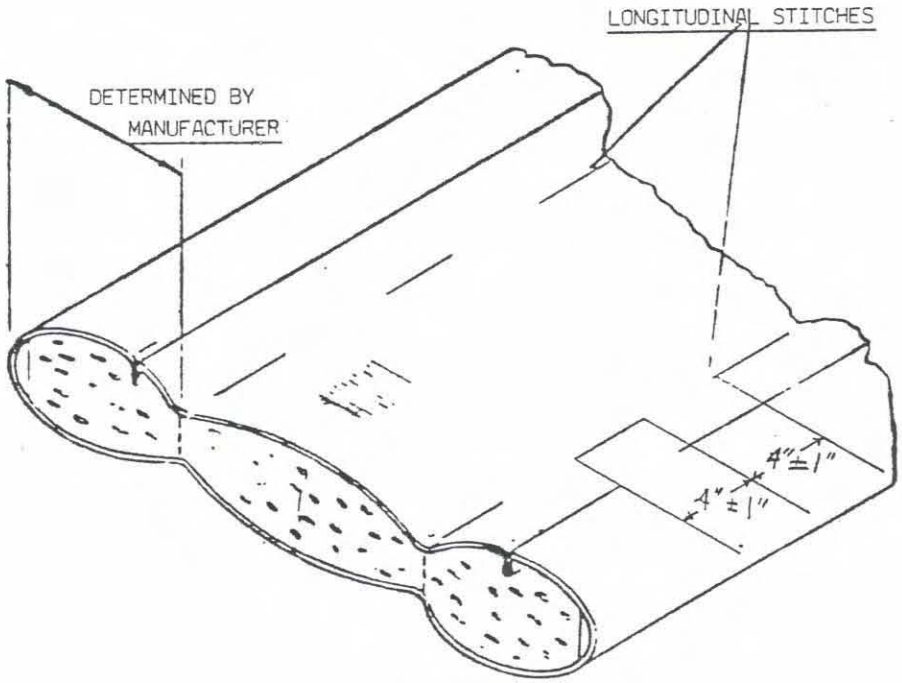

FIGURE 4
Typical Section Through Blanket

ISSUE DESIGNATION IN THIS COLI INDICATES CURRENT CHANGE

ISSUE DESIGNATION IN THIS COLU NDICATES CURRENT CHANGE

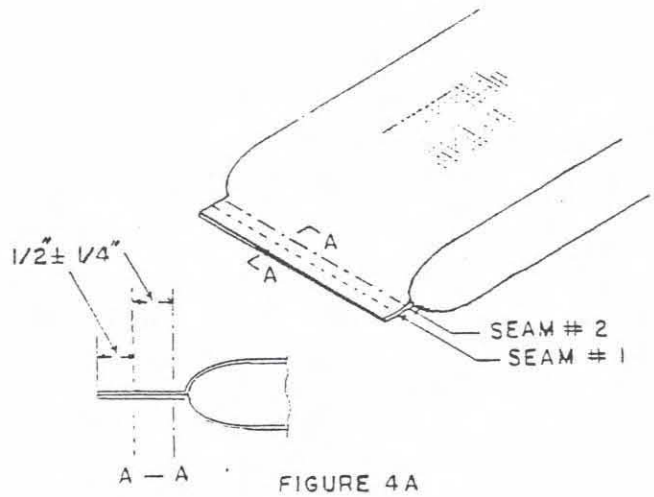

FIGURE 4A

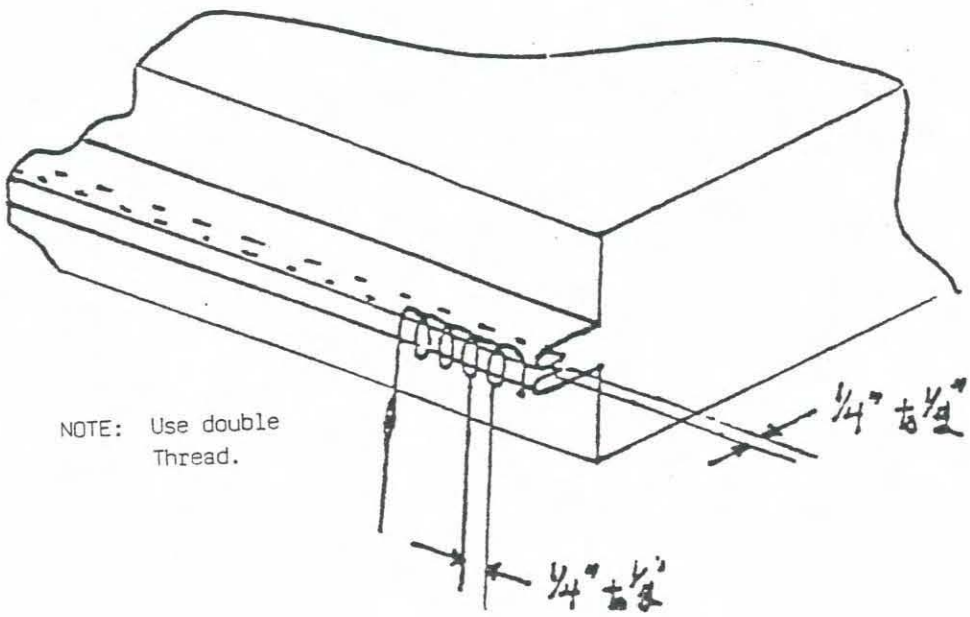

FIGURE 4B
ALTERNATE BLANKET CLOSURE
HAND SEWN METHOD

6.3.4.2 The specific placement of the longitudinal stitches is at the discretion of the fabricator.

6.3.4.3 Darts or similar may be used instead of longitudinal seams to secure the filler material in position. Refer to Figure 5.

6.3.4.4 The following requirements shall be complied with for darting/stitching to secure the filler material in position for HEMYC Blankets:

A) Any blanket with a circumferential dimension of sixteen (16") inches or less need not be darted if the filler material is of one piece.

B) Any blanket with a circumferential dimension of more than sixteen (16") inches but less than twenty-four (24") inches shall have at least one row of darts/stitches. Every multiple of eight (8") inches in that same dimension shall require an additional row of darts/stitches thereafter. Blankets with multiple pieces of filler material shall have at least one row of darts/stitches per piece.

C) For stitching to secure filler material the distance, in length, between stitches shall not exceed four (4") inches. For darts the distance shall not exceed nine (9") inches.

D) Equidistant placement of darts across the circumferential dimension is required unless there are multiple pieces of filler material, then the requirements of Item B above also apply.

E) All tolerances in darting/stitching shall be ± 1/4 inch.

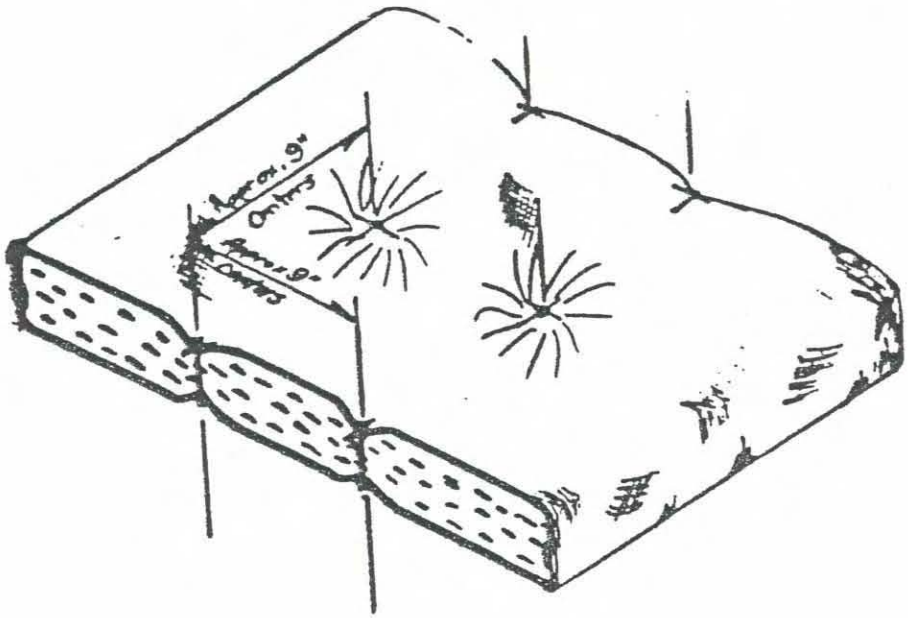

FIGURE 5

ISSUE DESIGNATION IN THIS COL INDICATES CURRENT CHANGE

C

6.4 Fabricator Inspector

6.4.1 The fabricator shall assure that the completed wrap assembly conforms to the requirements specified on the applicable fabrication order.

6.4.2 This inspection by fabricator shall be in addition to verification by QC as defined in QCP-10002.

6.5 Identification Markings

6.5.1 Identification markings shall be placed on each wrap assembly at a minimum of two locations.

A) In close proximity to one of the lengthwise edges on the exposed surface.

B) In close proximity to one of the ends on the exposed surface.

C. Various project requirements may specify that this marking is also provided on the interior (non-fire) surface.

6.5.2 These markings shall be the blanket number as defined on the applicable fabrication order.

6.5.3 Markings shall be of a waterproof paint or ink which will retain the marking, withstand weathering deterioration, and other handling effects and shall not be deleterious to the fabric.

6.5.4 These markings shall be in characters no less than three-fourths (3/4") inches (19mm) high.

7.0 ATTACHMENTS

None

ISSUE DESIGNATION IN THIS COLI ..NDICATES CURRENT CHANGE

PROMATEC

PROGRESSIVE MATERIALS AND TECHNOLOGIES, INC.

PROCEDURE FOR:	PROCEDURE NUMBER:
INSTALLATION OF HEMYC PROTECTIVE WRAP SYSTEM ONTO SINGLE OR MULTIPLE CONDUITS	IP-8400.103

PROCEDURE ISSUE SUMMARY

ISSUE/DATE	PREPARER	APPROVED	COMMENTS
F ISSUE 01/25/95	L.C. Spriggs	R.J. Block	Revised as noted. Issue for use.
G ISSUE 08/16/95	L.C. Spriggs	R.J. Block	Revised as noted. Issue for use.

ISSUE DESIGNATION IN THIS COLL. INDICATES CURRENT CHANGE

INSTALLATION OF HEMYC PROTECTIVE WRAP SYSTEM ONTO SINGLE OR MULTIPLE CONDUITS

1.0 PURPOSE

The purpose of this procedure is to assure that the installation of the HEMYC Protective Wrap System is consistent with the system as tested on the various qualification tests. The Fire Qualification Test, referenced as CTP-1026, consisted of a One (1) Hour Fire Exposure, per ASTM E-119 criteria, including hose stream test in accordance with the American Nuclear Insurers Information Bulletin No. 5(79) entitled, "ANI/MAERP Standard Fire Endurance Test Method to Qualify a Protective Envelope for Class IE Electrical Circuits".

2.0 SCOPE

This procedure provides the methods and guidelines to be utilized for the installation of HEMYC Protective Wrap Systems for conduits.

3.0 REFERENCE

3.1 10CFR50, Appendix R

3.2 ANI Bulletin 5(79)

3.3 IP-8400.101, Installation of HEMYC Protective Wrap System - Straight Sections of Cable Tray

3.4 IP-8400.102, Installation of HEMYC Protective Wrap System - Curved Sections of Cable Tray

3.5 QCP-10001, Packaging, Shipping, Receiving, Handling and Storage for HEMYC Protective Wrap Components

3.6 QCP-10002, Fabrication Inspection for HEMYC Protective Wrap Components

3.7 QCP-10003, Installation Inspection Criteria for HEMYC Protective Wrap Components

3.8 HEMYC Protective Cable Wrap System Typicals; PROMATEC Drawings B-310, B-311, B-312 and B-313

3.9 IP-8400.106, Installation of Fire Stops and Terminations Within the HEMYC Protective Wrap System for Cable Tray(s) and Conduits

ISSUE DESIGNATION IN THIS COLL INDICATES CURRENT CHANGE

4.0 DEFINITIONS

4.1 **CLIP** - sheet metal clip used to hold Wrap System onto finger strap.

4.2 **COLLAR** - a blanket used at wrap joints on conduit in place of wrap overlay.

4.3 **CONDUIT STANDOFF** - bracket used to allow two (2") inch airspace between conduit and blanket.

4.4 **FINGER STRAP** - thin, sheet metal strapping with pre-punched sections that may be bent out to provide anchoring for Wrap System.

4.5 **CLAMP/BANDING** - stainless steel or galvanized hose type clamp or banding. Hose clamps shall be a minimum gauge of .015" and a minimum width of one-half (1/2") inch.

4.6 **FLEX CONDUIT** - Non-rigid conduit that shall be covered using procedure IP-8400.112 for cable drops.

5.0 RESPONSIBILITIES

5.1 The authorized Installer's ENGINEERING DEPARTMENT shall be responsible to define the scope of work as prescribed on the applicable contract documents and provide the appropriate drawings, specifications, requirements, instructions, etc., to the department responsible for installation.

This department shall also be responsible to provide liaison with applicable client personnel and other internal departments to assure smooth flow of communication.

5.2 The authorized Installer's PRODUCTION DEPARTMENT shall be responsible for the identification and scheduling of work to be performed as defined on the documents furnished by ENGINEERING.

5.3 The Installers, as trained and certified by PROMATEC, shall be responsible for the performance of installation activities herein prescribed.

5.4 The Installer's QUALITY CONTROL PERSONNEL, as trained and certified by PROMATEC, shall be responsible for appropriate inspection, documentation and monitoring.

6.0 PROCEDURE

6.1 Stretch finger strapping along conduit to be protected and bend fingers out away from conduit.

6.2 Holding finger strapping against conduit, attach clamps on approximate eighteen (18") inch centers around conduit and tighten clamps. (See Figure 1.)

G 6.3 Impale wrap onto finger strap. Allow two (2") inch minimum between edge of wrap and fingers as shown on Figure 3.

6.4 Bring rest of wrap around conduit and impale edge of wrap onto fingers over the other edge. (See Figure 2.)

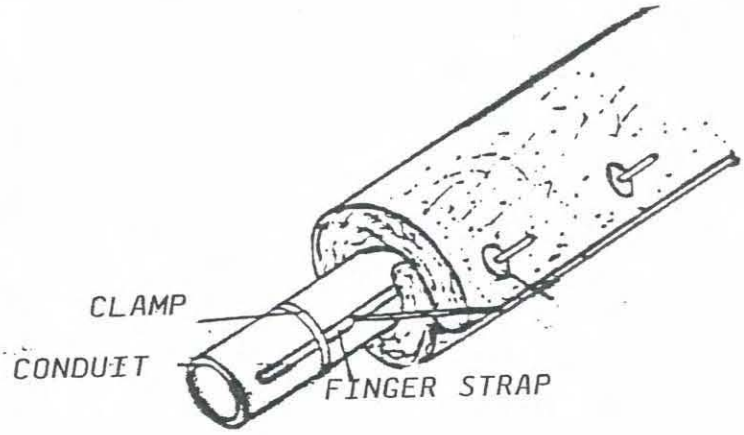

FIGURE 1

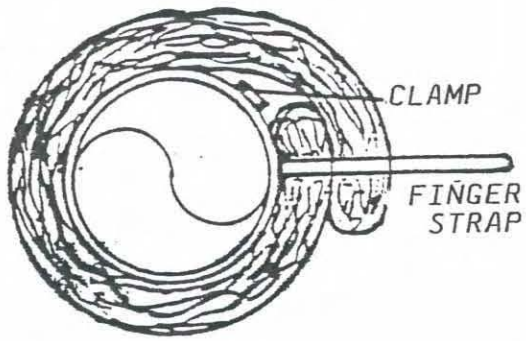

FIGURE 2

6.5 Attach clips onto fingers, compressing wrap approximately one-fourth to one-half (1/4" - 1/2") inch and bend finger over to secure blanket.

6.6 Multiple conduits are similar but only one conduit needs finger strapping. (Reference Figure 3.)

6.7 The number of conduits that may be wrapped is limited by wrap size. Large, bulky wrap sizes should be avoided due to difficulty in handling and possible damage.

If wrap sags excessively below conduit additional finger straps may be attached to centrally located conduits and used for additional wrap support.

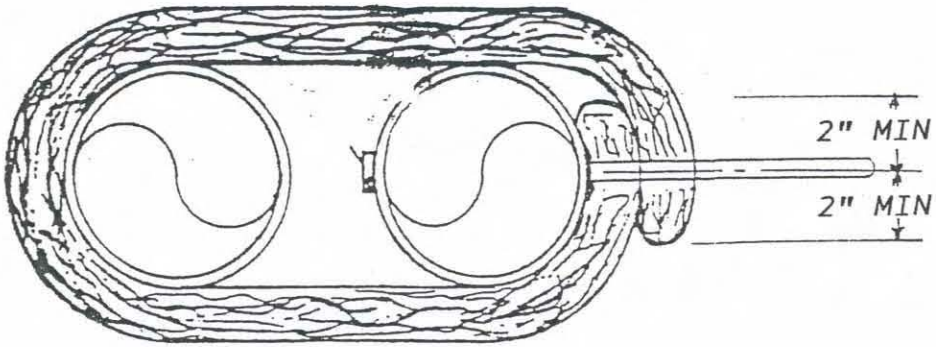

FIGURE 3

ISSUE DESIGNATION IN THIS COLI INDICATES CURRENT CHANGE

G

ISSUE DESIGNATION IN THIS COLL NDICATES CURRENT CHANGE

G 6.8 An alternate method of wrap attachment is to place the wrap around the conduit ensuring that the proper overlap is achieved. The proper overlap is a MINIMUM of two (2") inches for the circumferences of conduits and collars as shown on Fig. 4B. Attach clamps around the wrap to secure wrap to conduit. Clamp spacing shall be placed on maximum nine (9") inch centers.

Tighten clamps until wrap is compressed one-fourth to one-half (1/4" - 1/2") inches. DO NOT OVER-TIGHTEN as distortion of the blanket will result.

If gaps occur at wrap overlap, loosen clamps, shift blanket as necessary and re-tighten clamps.

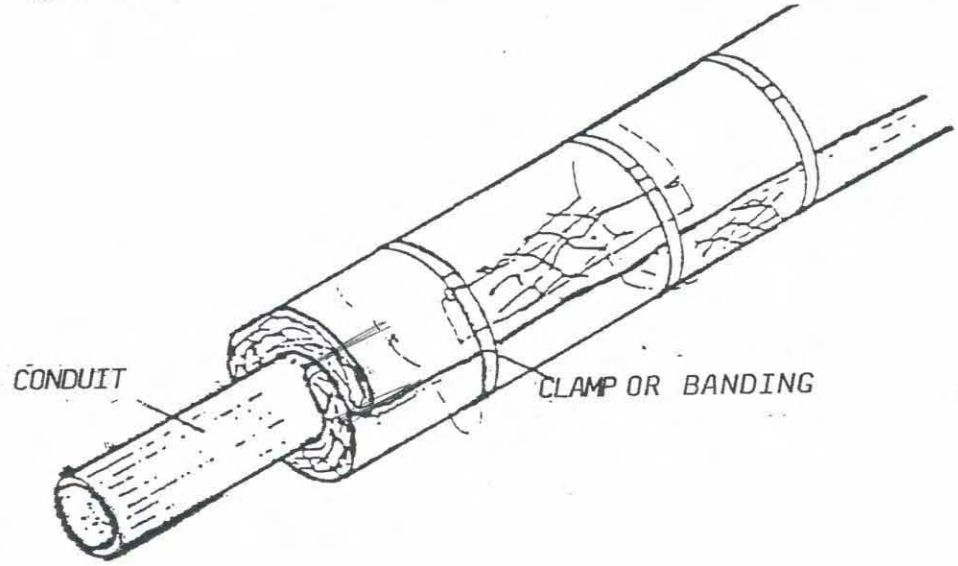

FIGURE 4A

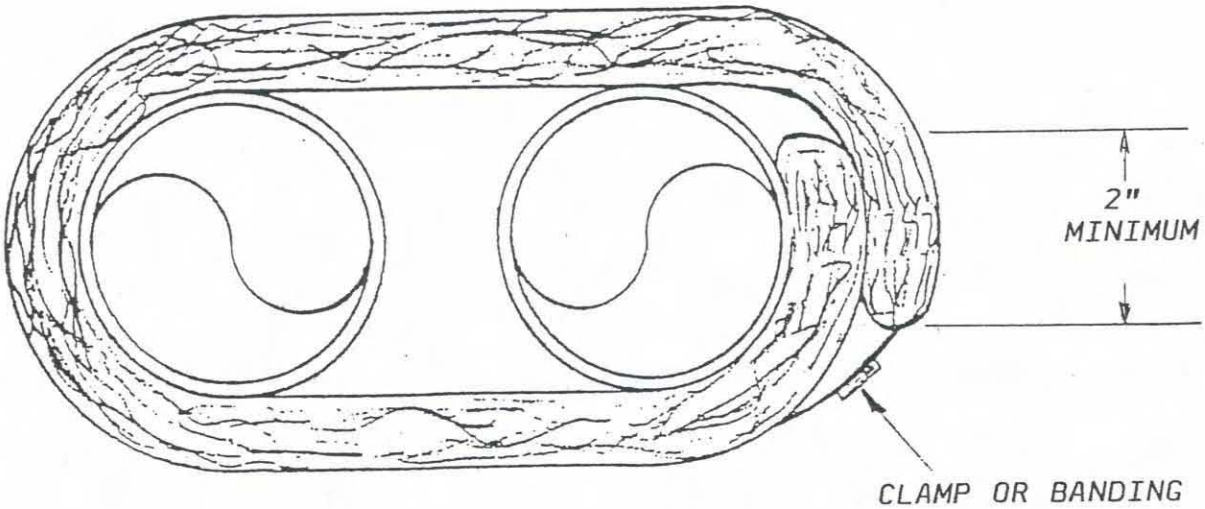

FIGURE 4B

ISSUE DESIGNATION IN THIS COLU NDICATES CURRENT CHANGE

6.9 In areas where ceiling, wall or floor clearances do not allow for wrap thickness, the wrap may be attached using methods and materials outlined in Procedure No. IP-8400.104, Section 6.3.

6.10 One of the two methods as shown in Figures 5 and 6 shall be outlined at wrap joints. Clamps or banding to secure should be installed as shown.

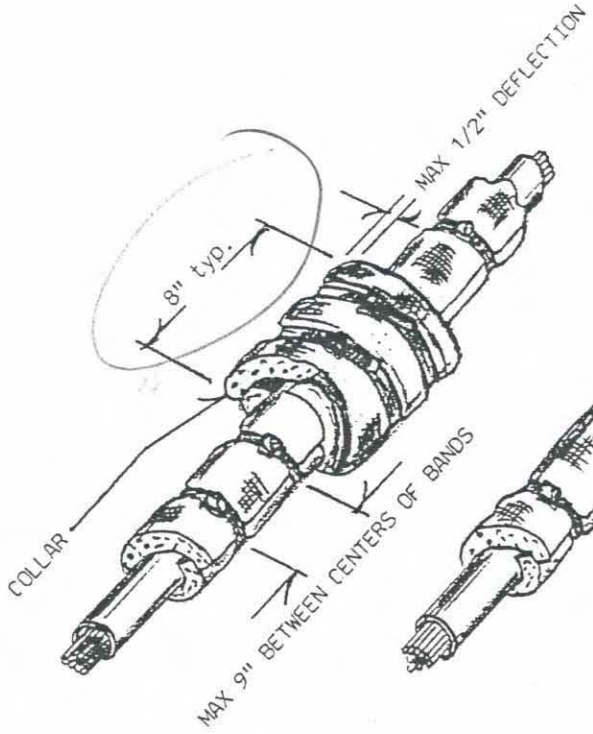

FIGURE 5
Typical Conduit Wrap
(Separate Wrap Style)

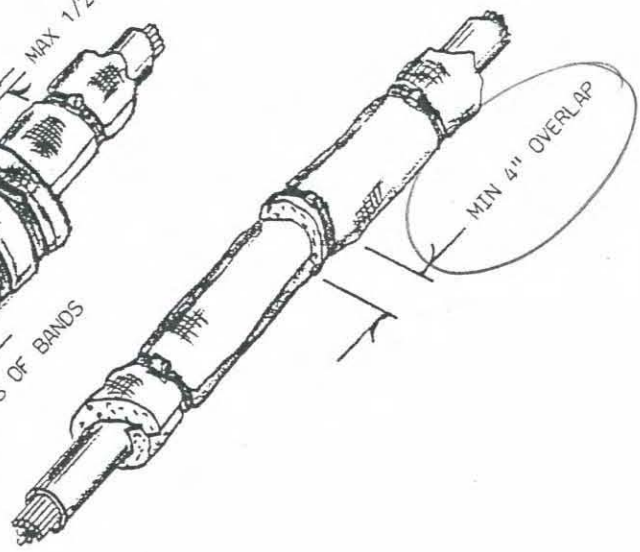

FIGURE 6
Typical Conduit Wrap
Joint Detail
(Overlap Type)

6.11 The following method is to be used where two (2") inch standoff bracket is required. Attach conduit standoff to conduit using all thread rod (See Figure 7). Use lock-washer and bolt to secure to conduit.

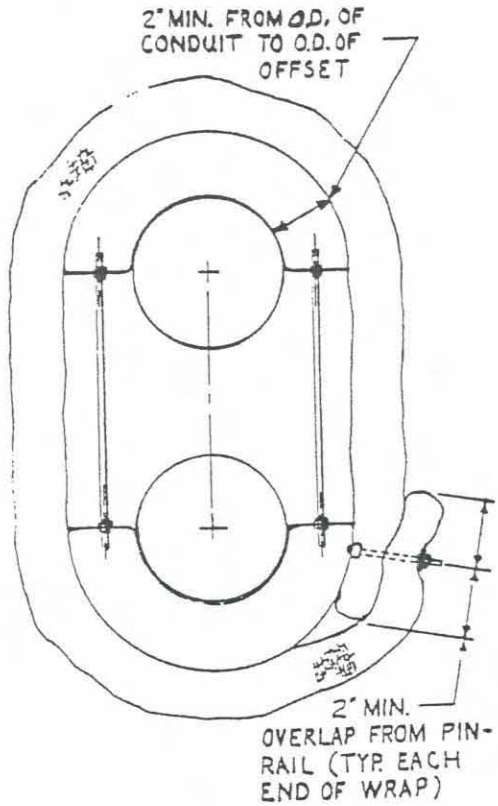

FIGURE 7

6.12 Conduit standoff are to be placed on maximum eighteen (18") inch centers. Attach rail and/or strut using bolts and lockwashers. Stud spacing is on nine (9") inch maximum centers (See Figure 8). Additional pin rail and/or strut may be used as determined by Installer's Site Engineer.

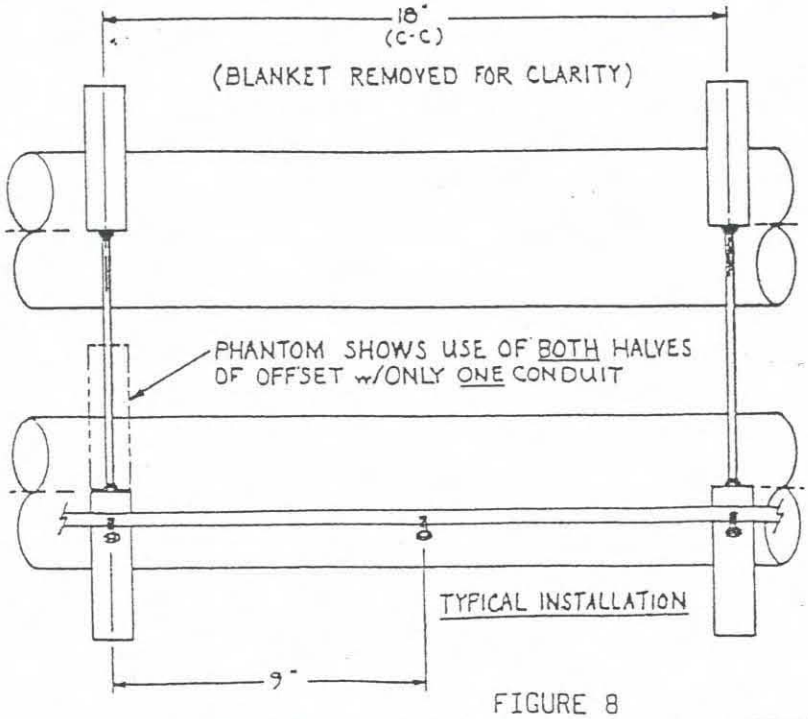

FIGURE 8

ISSUE DESIGNATION IN THIS COLL INDICATES CURRENT CHANGE

6.13 After framework is complete be sure to tighten all bolts.

6.14 Place blanket over studs allowing a minimum two (2") inch overlap from stud to edge of wrap. Bring wrap around standoff and impale edge of wrap onto studs. Allow minimum two (2") inch overlap from stud to edge of wrap. (See Figure 7.)

6.15 Use fender washer locknut to secure wrap to pin rail. Tighten locknut until wrap is compressed one-fourth to one-half (1/4" - 1/2") inch.

6.16 Use termination of system similar to procedure IP-8400.106, Section 6.3 Termination - Conduit (Floor, Ceiling or Wall).

7.0 ATTACHMENTS

7.1 ADDENDUM I

ISSUE DESIGNATION IN THIS COLL NDICATES CURRENT CHANGE

ADDENDUM I
ROCHESTER GAS & ELECTRIC
SITE SPECIFIC
GINNA STATION

4.5 **BANDING** - stainless steel banding shall be a minimum gauge of .015" and a minimum width of three-fourths (3/4") inches with wing seals.

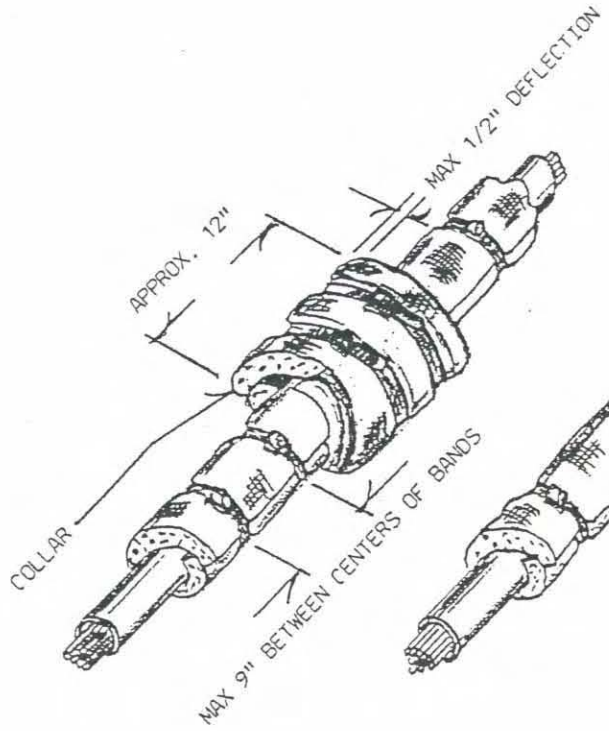

FIGURE 5a
Typical Conduit Wrap
(Separate Wrap Style)

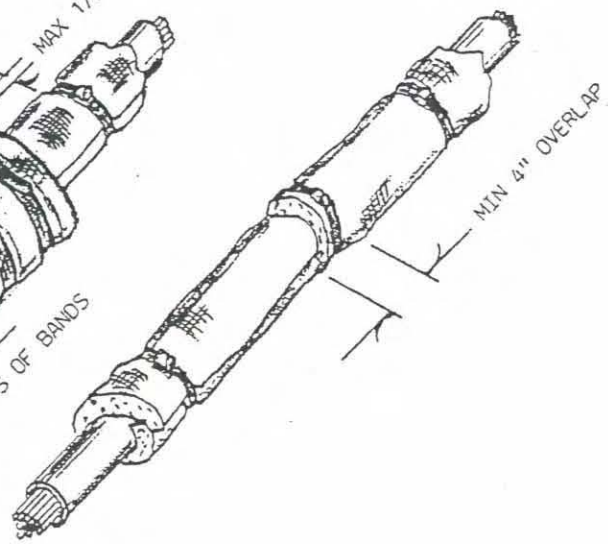

FIGURE 6a
Typical Conduit Wrap
Joint Detail
(Overlap Type)

ISSUE DESIGNATION IN THIS COLL .DICATES CURRENT CHANGE

CONTROL NO. CCN01

PROMATEC

PROGRESSIVE MATERIALS AND TECHNOLOGIES, INC.

PROCEDURE FOR:	PROCEDURE NUMBER:
REPAIR AND INSTALLATION OF HEMYC PROTECTIVE WRAP SYSTEM AROUND INTERFERENCES AND OBSTRUCTIONS	IP-8400.104

PROCEDURE ISSUE SUMMARY

ISSUE/DATE	PREPARER	APPROVED	COMMENTS
F ISSUE 01/25/95	L.C. Spriggs	R.J. Block	Revised as noted. Issue for use.

Form QC 5
06/01/82 (Rev 2) 09/13/91

ISSUE DESIGNATION IN THIS COLUMN DICATES CURRENT CHANGE

REPAIR AND INSTALLATION OF HEMYC PROTECTIVE WRAP SYSTEM AROUND INTERFERENCES AND OBSTRUCTIONS

1.0 PURPOSE

The purpose of this procedure is to assure that the installation of the HEMYC Protective Wrap System is consistent with the system as tested on the various qualification tests. The Fire Qualification Test, referenced as CTP-1026, consisted of a One (1) Hour Fire Exposure, per ASTM E-119 criteria, including hose stream test in accordance with the American Nuclear Insurers Information Bulletin No. 5(79) entitled "ANI/MAERP Standard Fire Endurance Test Method to Qualify a Protective Envelope for Class IE Electrical Circuits".

2.0 SCOPE

This procedure provides the methods and guidelines to be utilized for the repair and installation of the HEMYC Protective Wrap Systems around interferences and obstructions.

3.0 REFERENCE

3.1 10CFR50, Appendix R

3.2 ANI Bulletin No. 5(79)

3.3 HEMYC Test CTP-1026

3.4 QCP-10001, Packaging, Shipping, Receiving, Handling and Storage for the HEMYC Protective Wrap Components

3.5 QCP-10002, Fabric Inspection for HEMYC Protective Wrap Components

3.6 QCP-10003, Installation Inspection Criteria for HEMYC Protective Wrap Components

3.7 HEMYC Protective Cable Wrap System Typicals, PROMATEC Drawings B-310, B-311, B-312 and B-313.

4.0 DEFINITIONS

4.1 **CONCRETE ANCHORS** - site approved anchors such as HILTI or Phillips Wedge Anchors used to hold blanket to walls, ceiling or partitions.

4.2 **NEEDLE** - a needle, curved or straight, capable of handling the thread type noted in these definitions.

4.3 **PLUMBERS TAPE** - flexible metal strip having pre-punched holes running the length

of the attached wrap.

4.4 **RETAINER STRAP** - rigid metal strip having pre-punched holes running the length of the attached blanket.

4.5 **THREAD** - fire and heat resistant, quartz type thread such as Alpha Quartz Q-24.

5.0 RESPONSIBILITIES

5.1 The authorized Installer's ENGINEERING DEPARTMENT shall be responsible to define the scope of work as prescribed on the applicable contract documents and provide the appropriate drawings, specifications, requirements, instructions, etc., to the department responsible for installation.

This department shall also be responsible to provide liaison with applicable client personnel and other internal departments to assure smooth flow of communications.

5.2 The authorized Installer's PRODUCTION DEPARTMENT shall be responsible for the identification and scheduling of work to be performed as defined on the documents furnished by ENGINEERING.

F 5.3 The Installers, as trained and certified by PROMATEC, shall be responsible for the performance of installation activities herein prescribed.

F 5.4 The Installer's QUALITY CONTROL PERSONNEL, as trained and certified by PROMATEC, shall be responsible for appropriate inspection, documentation, and monitoring.

6.0 PROCEDURE

6.1 Penetrating Members

6.1.1 Cut affected wrap to a depth sufficient to allow the wrap to be installed around the penetrating member (See Figure 1).

6.1.2 Using quartz thread and proper needle (curved needle suggested), sew the inner portion of the wrap (Siltemp or fiberglass) together around the penetrating member.

6.1.3 Fill any gaps in the ceramic fiber fill with additional fiber and sew the outer Siltemp material together (See Figure 2). Stitches shall be no more than one-half (1/2") inch apart.

6.1.4 Fill any gaps around the penetrating member with ceramic fiber.

F 6.1.5 Cut a four (4") inch wide piece of ceramic blanket and place around the penetrating member with a one to two (1" - 2") inch overlap at the ends. (See Figure 3).

F 6.1.6 A slightly larger section of Siltemp shall be placed over the ceramic blanket and sewn top, sides and bottom to tightly seal the Wrap System (See Figure 4). Stitches shall be no more than one-half (1/2") inch apart. Seal shall be accomplished by sewing/banding the blanket in place. Interfering cable trays may be wrapped as described in Procedure IP-8400.106, Sections 6.1.2

ISSUE DESIGNATION IN THIS COLUMN INDICATES CURRENT CHANGE

through 6.1.5.

6.1.7 It may not be possible in all cases to get the Siltemp cloth tight against the penetrating member. In these cases ensure that the ceramic blanket is forced tightly against the penetrating member by the Siltemp to prevent flame and/or heat passage into system. Clamps may be used to accomplish this, as necessary.

F 6.1.8 All supports and interferences shall be protected a minimum of four (4") inches measured linearly from the structure being protected.

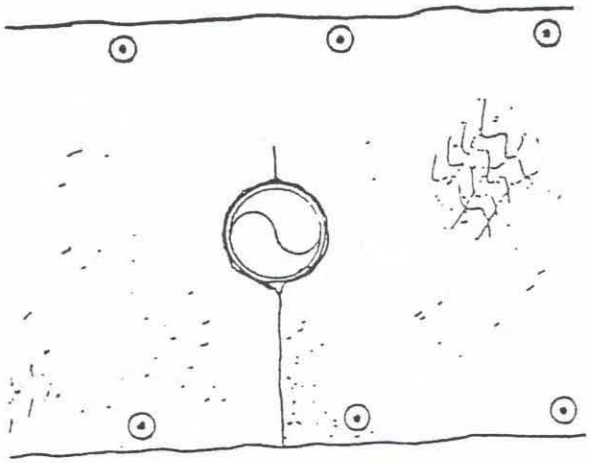

FIGURE 1

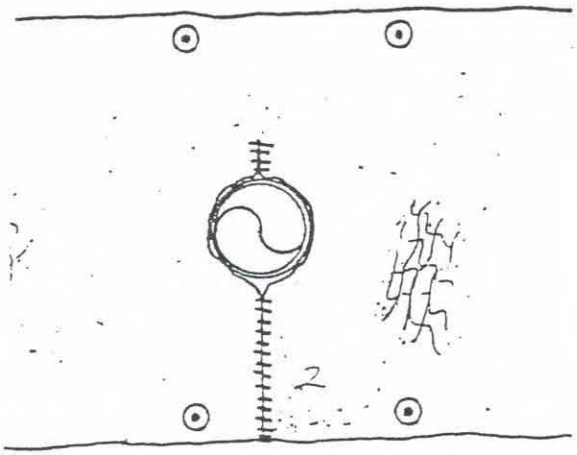

FIGURE 2

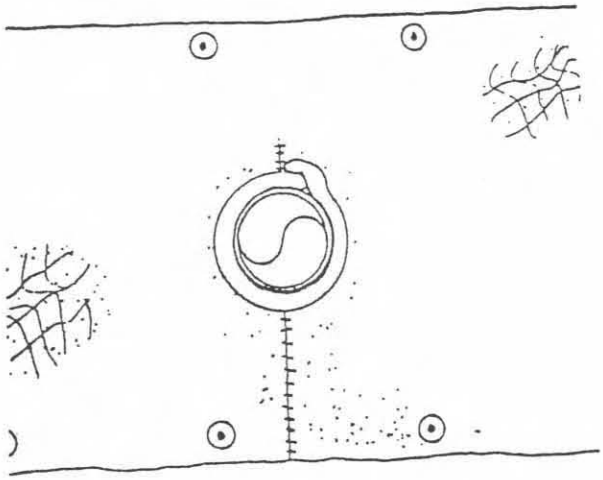

FIGURE 3

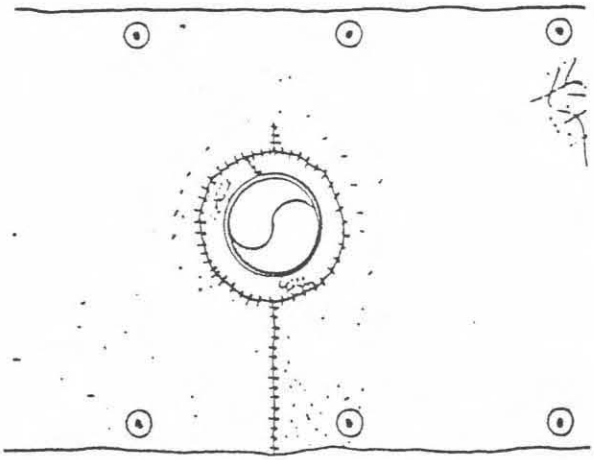

FIGURE 4

6.2 Adjoining or Supporting Members

ISSUE DESIGNATION IN THIS COLUMN INDICATES CURRENT CHANGE

ISSUE DESIGNATION IN THIS COLUMN INDICATES CURRENT CHANGE

F

6.2.1 If possible the adjoining or supporting member should be encapsulated within the system using the procedure outlined in Section 6.1 to seal any openings. (See Figure 5.) In addition, these interfering members may have pin rail banded to them to help secure the wrap. This configuration may be substituted for pin rail studs where top and/or bottom rails meet these interfering members, maintaining nine (9") inch maximum spacing between adjacent pin rail studs. All stud spacings are as measured along the rail.

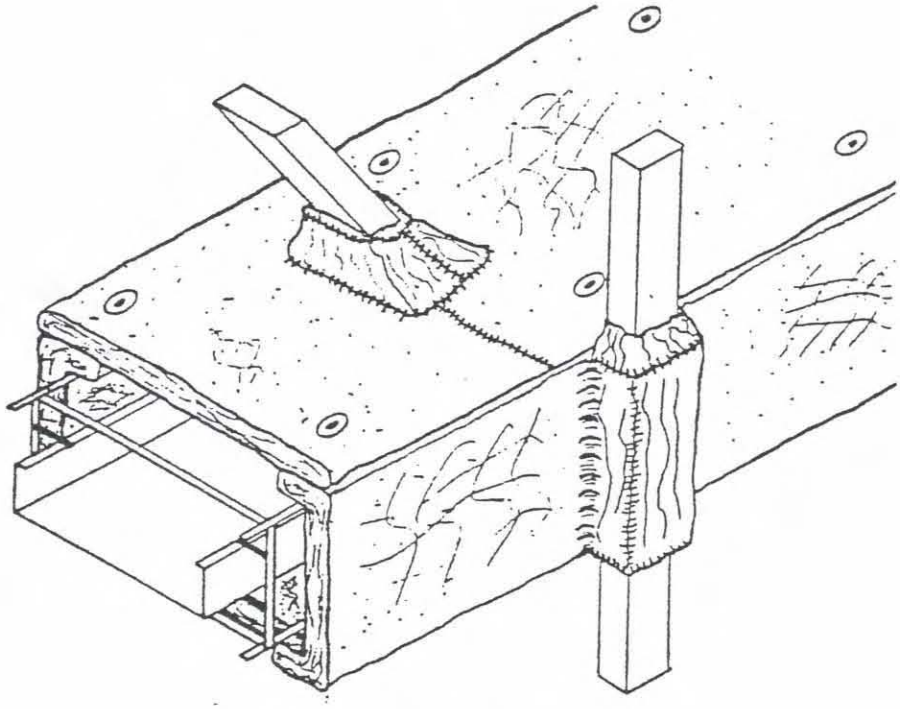

FIGURE 5

6.2.2 Where, due to size, shape or location, the adjoining or supporting member cannot be encapsulated, the Installer's Site Engineer shall determine alternate methods on a case by case basis. Client's Engineer or authorized representative shall review alternate methods, as required. Such alternates shall be within the parameters established by the HEMYC fire testing.

6.3 Wall, Ceiling or Floor Interferences

6.3.1 Where walls, ceilings or floors prevent the installation of the full system, the wraps may be installed as shown in Figure 6. Extra wrap supports may be required as determined by the Installer's Site Engineer.

6.3.2 Framework shall be attached to the interfering surface using concrete anchors and L-Brackets #B-6102 as shown in Figure 6.

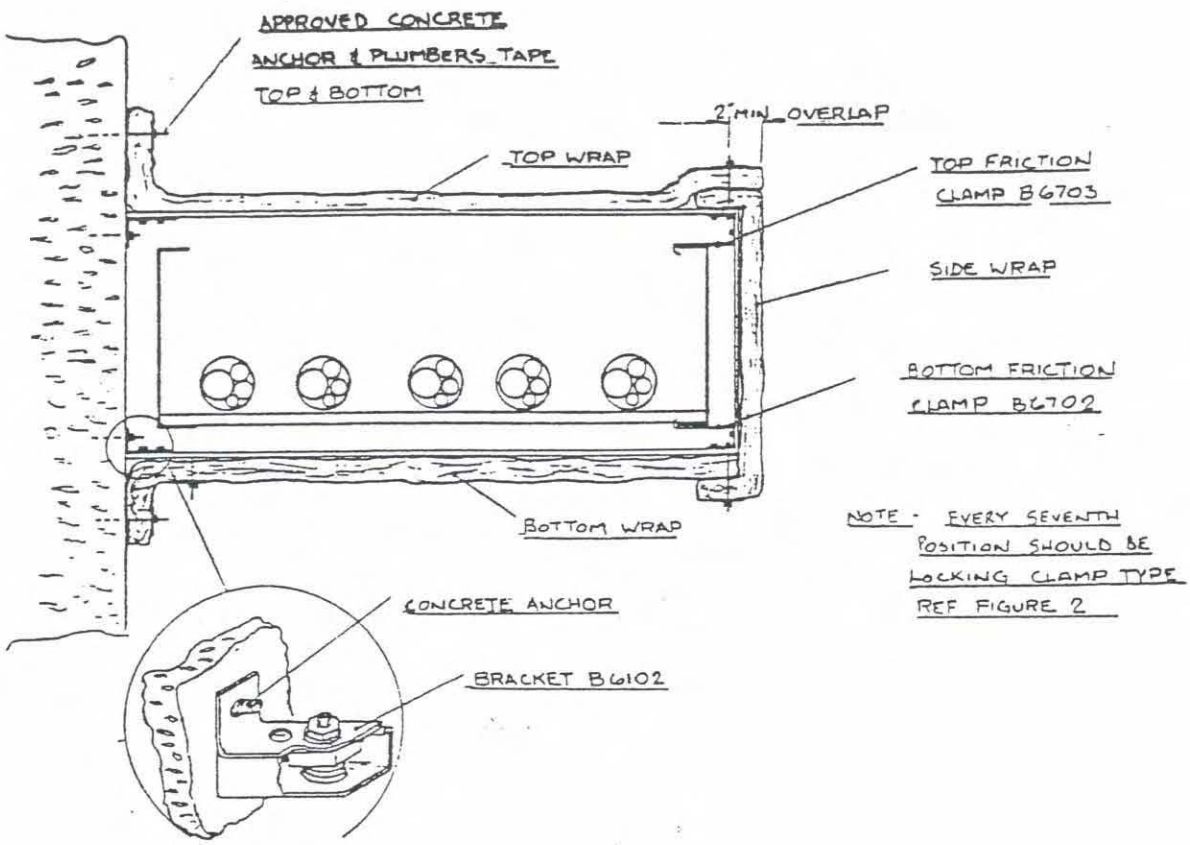

FIGURE 6

6.3.3 Concrete anchors for wrap shall be placed no more than nine (9") inches apart.

6.3.4 Plumbers tape or retainer strap must be installed in the areas where the Wrap System is attached to a wall or ceiling. The plumbers tape or retainer strap is to be installed over the studs after the blanket is installed and prior to the fender washer and locknut. (See Figure 7.) Tape should be kept as tight as possible to prevent the wrap from sagging away from the wall creating a passage for heat and/or flame. Additional holes in plumbers tape or retainer strap may be made as necessary to accommodate variations in stud placement.

F 6.3.5 Where the Wrap System is to be attached to a termination surface (e.g., wall, floor, ceiling, adjoining structure), pin rail may be mounted as an alternative to installing multiple anchor studs.

To attach pin rail to the surface:

- Install a strip of ceramic blanket as a "gasket", between the pin rail and the surface. This blanket strip shall be one-fourth to one-half (1/4" - 1/2") inch thick and at least twice as wide as the rail.

- At least one (1) anchoring stud shall be located at each end of the pin rail.

ISSUE DESIGNATION IN THIS COLUMN INDICATES CURRENT CHANGE

Install the end studs one-half (1/2") inches to five (5") inches O.C. from each end.

- For pin rail up to twenty-four (24") inches long use a minimum of two (2) anchoring studs; one at each end.

- For pin rail twenty-five (25") inches to sixty (60") inches long, use a minimum of three (3) studs; each end and one in the approximate middle.

- For pin rails sixty-one (61") inches to one hundred twenty (120") inches long, use a minimum of four (4) studs; each end and another two approximately evenly spaced between the end anchoring studs.

NOTE: Anchoring studs may be site approved concrete anchors, 1/4-20 through-bolts or other engineering approved fasteners.

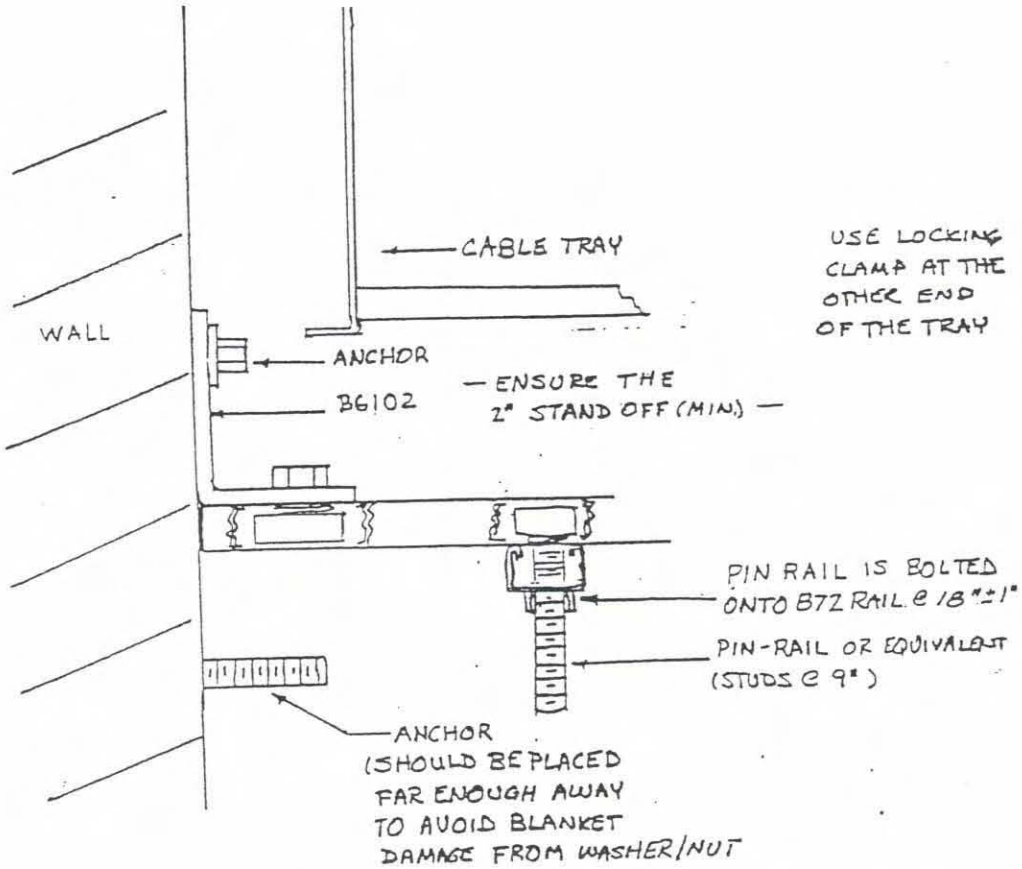

NOTE: IT IS SUGGESTED THAT LOCK WASHERS AND NUTS BE USED ON THE ANCHORS RATHER THAN LOCKNUTS, TO AVOID OVER TORQUING OF ANCHORS

FIGURE 6A
TRAY MOUNTING DETAIL
WALL TO WALL WRAP
BOTTOM SECTION

ISSUE DESIGNATION IN THIS COLUMN INDICATES CURRENT CHANGE
F

ISSUE DESIGNATION IN THIS COLUMN DICATES CURRENT CHANGE

F

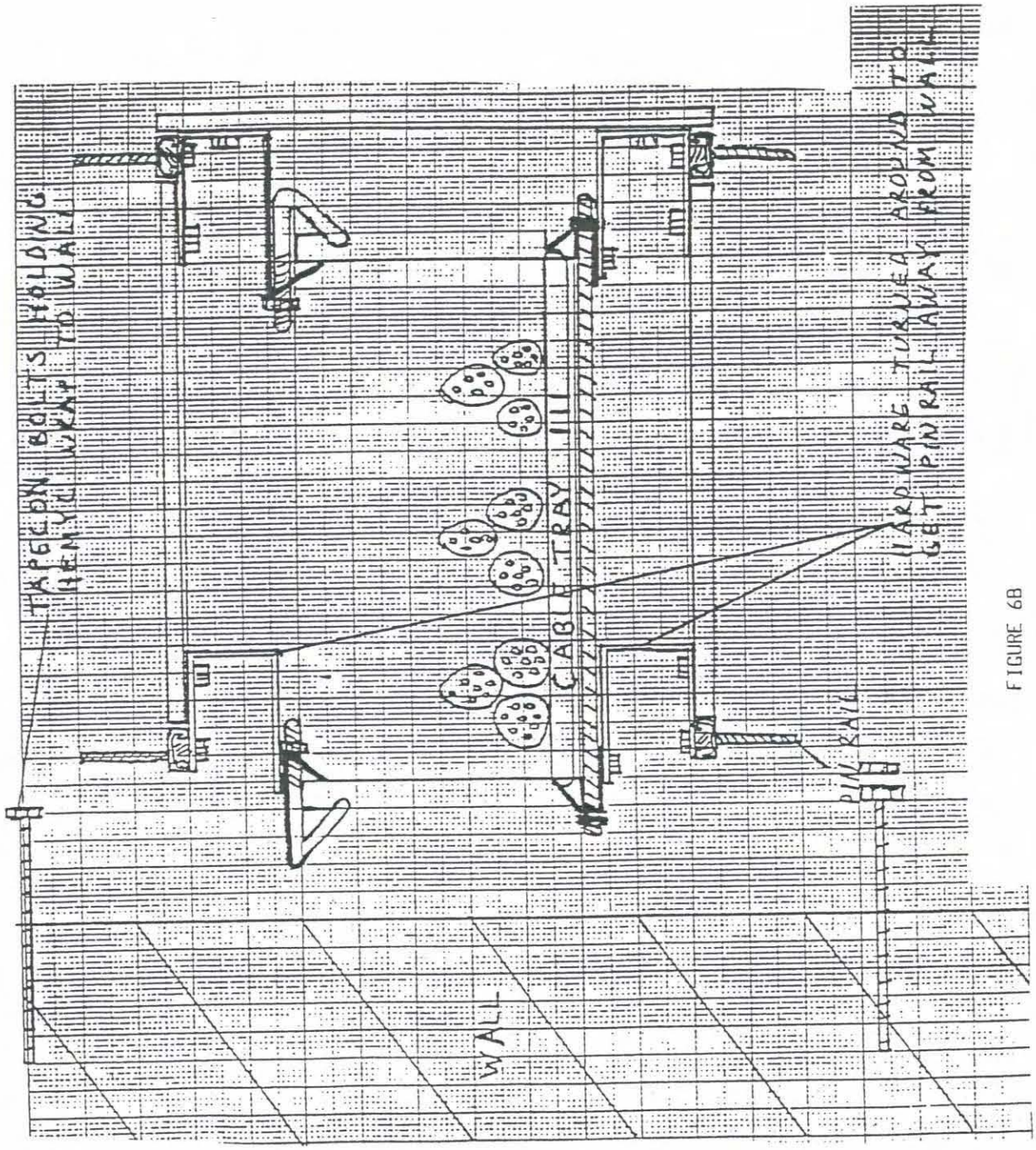

FIGURE 6B

ISSUE DESIGNATION IN THIS COLU INDICATES CURRENT CHANGE

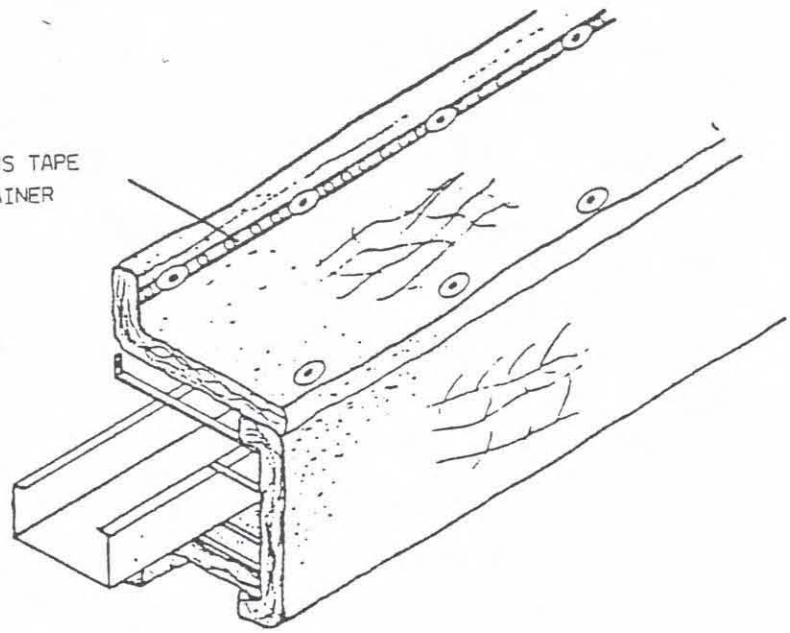

FIGURE 7

6.4 Repair Procedure

6.4.1 Responsible parties shall inspect damaged wrap to determine the extent of damage and if repair or replacement is required. Order replacement wrap if damage is extensive.

6.4.2 Remove damaged wrap to work area.

6.4.3 Replace any damaged or deformed framework/support materials utilizing methods outlined in PROMATEC Installation Procedures IP-8400.101, IP-8400.102 and/or IP-8400.103.

6.4.4 Rips

6.4.4.1 Sew the interior fabric, if necessary, the full length of the ripped fabric with stitches no more than one-half (1/2") inch apart. Extra stitches will need to be added to each end of rip to ensure that the rip does not "creep".

6.4.4.2 Replace any ceramic fiber lost due to damage. Ensure that no gaps remain in fiber filler and that proper thickness is maintained.

6.4.4.3 Sew the exterior fabric together as outlined in Section 6.4.4.1. If any gaps are found in fabric it may be necessary to insert an appropriately sized piece of fabric inside the system prior to sewing fabric closed.

6.4.4.4 Reinstall wrap as outlined in PROMATEC Procedure IP-8400.101.

6.4.5 Holes or Large Tears

ISSUE DESIGNATION IN THIS COLUMN INDICATES CURRENT CHANGE

6.4.5.1 Patches of the proper type fabric, Siltemp or fiberglass, should be cut to a size sufficient to cover the hole with an approximate two (2") inch overlap onto undamaged fabric

6.4.5.2 Repair the interior surface first, if necessary, by placing patch over hole and sewing around the perimeter of patch with stitches no more than one-half (1/2") inch apart.

6.4.5.3 Replace any ceramic fiber as necessary. Ensure that no gaps remain and that proper thickness is maintained.

6.4.5.4 Place the exterior patch over the hole and sew as noted in Section 6.4.5.2. (See Figure 8.)

6.4.5.5 Reinstall wrap as outlined in PROMATEC Procedure IP-8400.101, using new locknuts on studs.

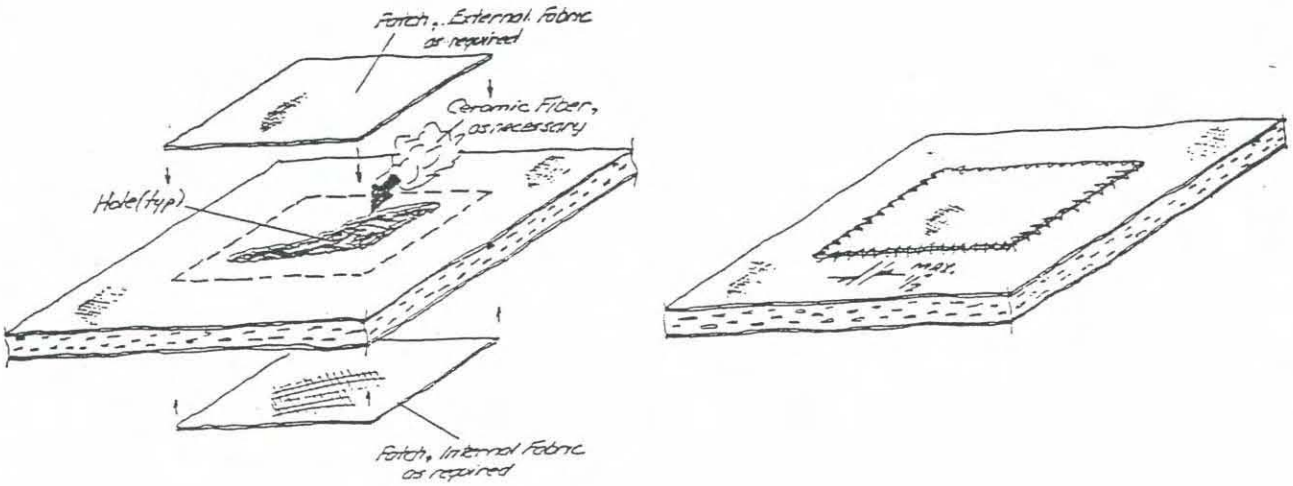

FIGURE 8

7.0 ATTACHMENTS

None

ISSUE DESIGNATION IN THIS COLUMN INDICATES CURRENT CHANGE

INSTALLATION OF HEMYC PROTECTIVE WRAP SYSTEM ONTO CABLE DROPS

1.0 PURPOSE

The purpose of this procedure is to assure that the installation of the HEMYC Protective Wrap System is consistent with the system as tested on the various qualification tests. The Fire Qualification Test, referenced as CTP-1026, consisted of a One (1) Hour Fire Exposure, per ASTM E-119 criteria, including hose stream test in accordance with the American Nuclear Insurers Information Bulletin 5(79) entitled, "ANI/MAERP Standard Fire Endurance Test Method to Qualify a Protective Envelope for Class IE Electrical Circuits",

2.0 SCOPE

C This procedure provides the methods and guidelines to be utilized for the installation of HEMYC Protective Wrap Systems onto cable drops.

3.0 REFERENCE

3.1 10CFR50, Appendix R

3.2 ANI Bulletin 5(79)

3.3 IP-8400.103, Installation for HEMYC Protective Wrap System - Onto Single or Multiple conduits

3.4 IP-8400.104, Installation for HEMYC Protective Wrap System - Around Interferences and Obstructions.

3.5 IP-8400.106, Installation for HEMYC Protective Wrap System for Cable Tray(s) and Conduit

C 3.6 QCP-10001, Packaging, Shipping, Receiving, Handling and Storage for HEMYC Protective Wrap Components

C 3.7 QCP-10002, Fabrication Inspection for HEMYC Protective Wrap Components

C 3.8 QCP-10003, Installation Inspection Criteria for HEMYC Protective Wrap Components

4.0 DEFINITIONS

4.1 **CLIP** - stainless steel metal clip used to hold banding in place.

C 4.2 **COLLAR** - a blanket used at wrap joints on conduit and/or cable wrap in place of wrap overlap.

C 4.3 **CLAMP** - stainless steel or galvanized hose type clamp or stainless steel banding.

ISSUE DESIGNATION IN THIS COLUMN INDICATES CURRENT CHANGE

C 4.4 **STRIP** - cèramic blanket sufficiently thick to achieve two (2") inches air space between cable and blanket wrap.

C 4.5 **WRAP** - a fireproof product consisting of ceramic fiber material sewn into an envelope of fireproof fabric.

5.0 RESPONSIBILITIES

5.1 The authorized Installer's ENGINEERING DEPARTMENT shall be responsible to define the scope of work as prescribed on the applicable contract documents and provide the appropriate drawings, specifications, requirements, instructions, etc., to the department responsible for installation.

C This department shall also be responsible to provide liaison with applicable client personnel and other internal departments to assure smooth flow of communication.

C 5.2 The authorized Installer's PRODUCTION DEPARTMENT shall be responsible for the identification and scheduling of work to be performed as defined on the documents furnished by Engineering.

C 5.3 The Installers, as trained and certified by PROMATEC, shall be responsible for the performance of installation activities herein prescribed.

C 5.4 The Installer's QUALITY CONTROL PERSONNEL, as trained and certified by PROMATEC, shall be responsible for appropriate inspection, documentation and monitoring.

6.0 PROCEDURE

C 6.1 Cut ceramic fiber blanket sufficiently thick to achieve two (2") inch air space in approximately three (3") inch wide strips, place around cable(s) and secure, space the three (3") inch wide strips on maximum nine (9") inch centers. A minimum of two (2") inch air space is required between cable and blanket wrap.

C 6.2 Additional three (3") inch wide ceramic fiber blanket sufficiently thick to achieve two (2") inch air space may be utilized in order to maintain two (2") inch air space.

C 6.3 Place minimum one and one-half (1-1/2") inch blanket wrap around three (3") inch wide strips and cable. Banding to be placed around blanket wrap at point over three (3") inch wide strip. Blanket must overlap a minimum of three (3") inches. Outside (blanket wrap band) banding is to be placed over the three (3") inch wide strips only.

Tighten banding until blanket is compressed one-fourth to one-half (1/4" - 1/2") inch. DO NOT OVER-TIGHTEN.

6.4 At blanket wrap joints, or overlap, a two (2") inch ceramic fiber blanket cut in approximate six (6") inch wide strip should be used around cable. See IP-8400.103, Section 6.9 for detail of blanket wrap.

6.5 For termination to wall, floor or ceiling, use IP-8400.106 Conduit.

6.6 For Cable Drops into Cable Tray Wrap System, use IP-8400.104, Section 6.1 Penetrating Member.

7.0 ATTACHMENTS

7.1 Drawing B-272.11, HEMYC System Cable Drop with Air Space

ISSUE DESIGNATION IN THIS COLU .DICATES CURRENT CHANGE

NOTE:
Prefabricated blanket section dimensions determined by installers on a case by case basis. SILTEMP and fiberglass to be sewn with fire retardant Astroquartz or similar thread.

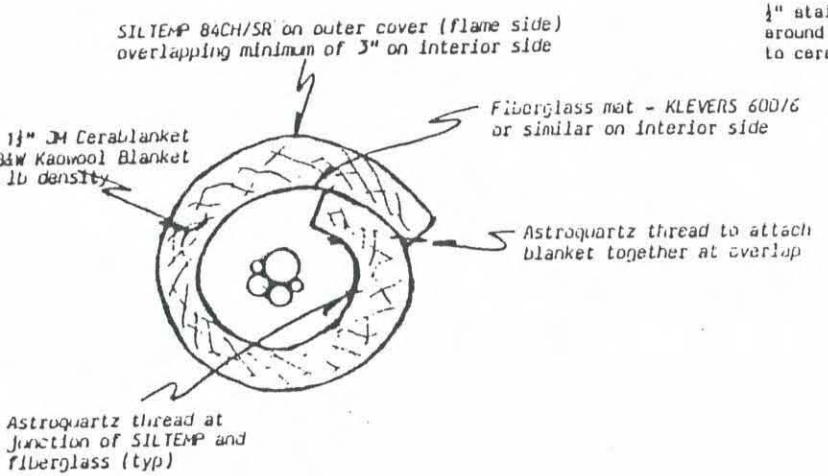

SECTION C-C
CABLE DROP W/ AIR SPACE
(TEST TWO)

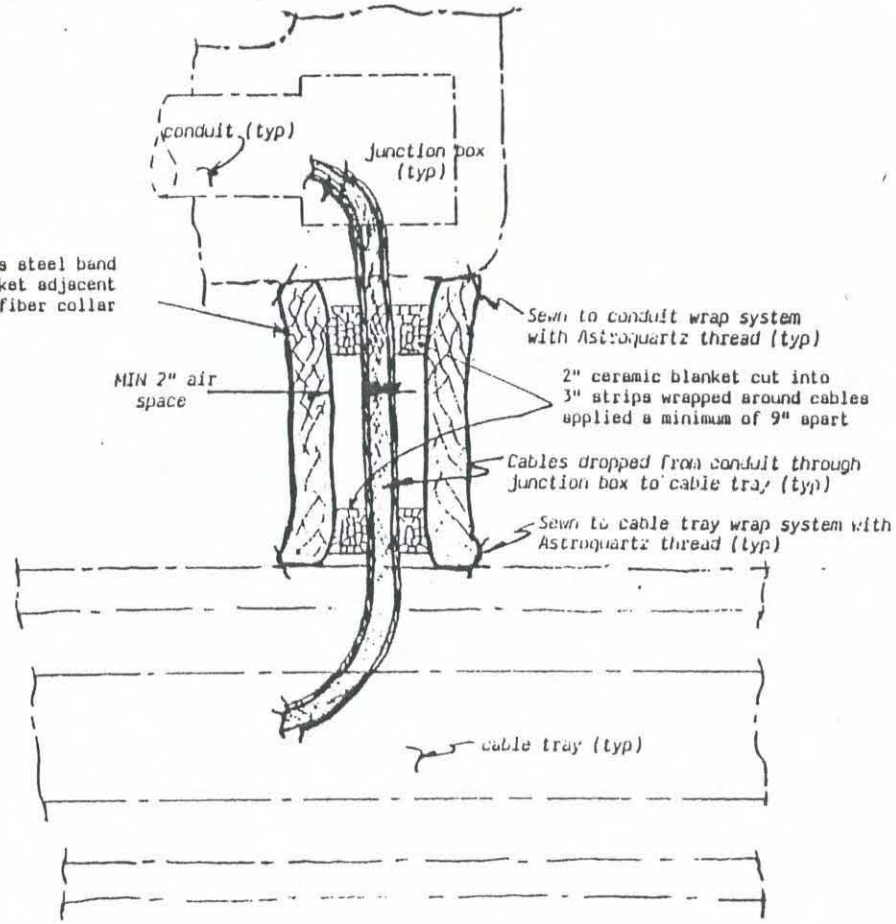

TYPICAL INSTALLATION
OF CABLE DROP W/ AIR SPACE

REVISIONS			INSULATION, INC.		
NO	DATE	BY	HEMYC SYSTEM		
1	3-30-84	KWS	CABLE DROP W/ AIR SPACE		
2			DRAWN BY LCS	SCALE nts	MATERIAL as noted
3			CHK'D	DATE 7/19/82	DRAWING NO
4			TRACED BLL	APP'D	B - 272.11
5					

ISSUE DESIGNATION IN THIS COLUMN INDICATES CURRENT CHANGE

INSTALLATION OF HEMYC PROTECTIVE WRAP SYSTEM TO JUNCTION BOXES AND SIMILAR EQUIPMENT

1.0 PURPOSE

The purpose of this procedure is to assure that the installation of the HEMYC Protective Wrap System is consistent with the system as tested in the various qualification tests. The Fire Qualification Test, referenced as CTP-1026, consisted of a One (1) Hour Fire Exposure, per ASTM E-119 criteria, including hose stream test in accordance with the American Nuclear Insurers Information Bulletin No. 5(79) entitled, "ANI/MAERP Standard Fire Endurance Test Method to Qualify a Protective Envelope for Class IE Electrical Circuits."

2.0 SCOPE

This procedure provides the methods and guidelines to be utilized for the installation of Protective Wrap Components to electrical junction boxes and similar equipment.

3.0 REFERENCE

3.1 10CFR50, Appendix R

3.2 ANI Bulletin No. 5(79)

3.3 HEMYC Test CTP-1026

3.4 IP-8400.101, Installation Procedure for HEMYC Protective Wrap System - Straight Sections

3.5 QCP-10001, Packaging, Shipping, Receiving, Handling, and Storage for HEMYC Protective Wrap Components

3.6 QCP-10002, Fabrication Inspection for HEMYC Protective Wrap Components

3.7 QCP-10003, Installation Inspection Criteria for HEMYC Protective Wrap Components

3.8 HEMYC Protective Cable Wrap System Typicals, PROMATEC Drawings B-310, B-311, B-312 and B-313.

4.0 DEFINITIONS

None

5.0 RESPONSIBILITIES

5.1 The authorized Installer's ENGINEERING DEPARTMENT shall be responsible to define the scope of work as prescribed on the applicable contract documents and provide the appropriate drawings, specifications, requirements, instruction, etc., to the department responsible for installation.

This department shall also be responsible to provide liaison with applicable client personnel and other internal departments to assure smooth flow of communication.

5.2 The authorized Installer's PRODUCTION DEPARTMENT shall be responsible for the identification and scheduling of work to be performed as defined on the documents furnished by ENGINEERING.

C 5.3 The Installers, as trained and certified by PROMATEC, shall be responsible for the performance of installation activities herein prescribed.

C 5.4 The Installer's QUALITY CONTROL PERSONNEL shall be responsible for appropriate inspection, documentation, and monitoring.

6.0 PROCEDURE

6.1 Layout of Wrap

6.1.1 The Installer's Site Engineer shall take exterior measurements of the junction boxes to be protected and develop a pattern similar to the pattern shown in Figure 1. An alternate method would be to develop pieces that could be sewn as shown in Figure 2.

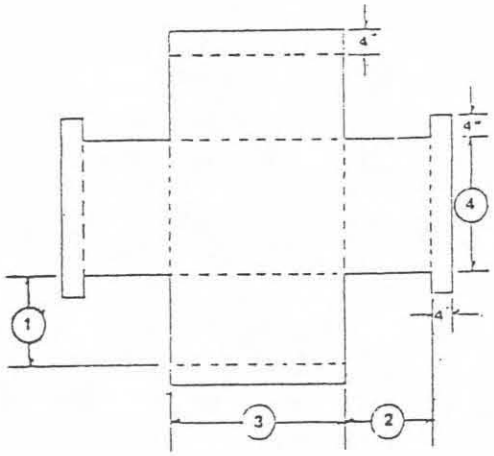

FIGURE 1

ISSUE DESIGNATION IN THIS COLU NDICATES CURRENT CHANGE

ISSUE DESIGNATION IN THIS COLU .DICATES CURRENT CHANGE

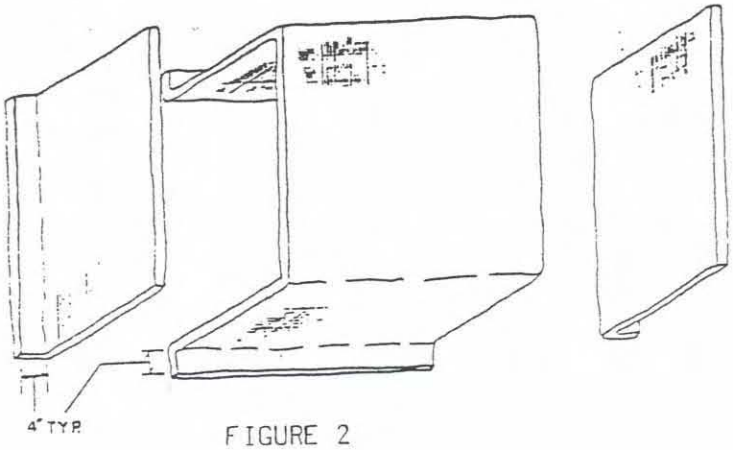

FIGURE 2

6.1.2 Dimensions #1, 2 and 3 on Figure 1 should be increased four (4") inches from junction box dimensions to allow for wrap thickness.

6.1.3 Note on Figures 1 and 2 that approximately four (4") inches is allowed at ends to overlap onto surface for attachment.

6.1.4 The Installer's Site Engineer should ensure that sufficient material allowances are made on all patterns to provide for overlap at corners of junction box.

6.2 Installation

6.2.1 Wrap System may be installed as shown in Figure 3 for floor, wall or ceiling mounting or as shown in Figure 4 in the case of free standing equipment.

FIGURE 3

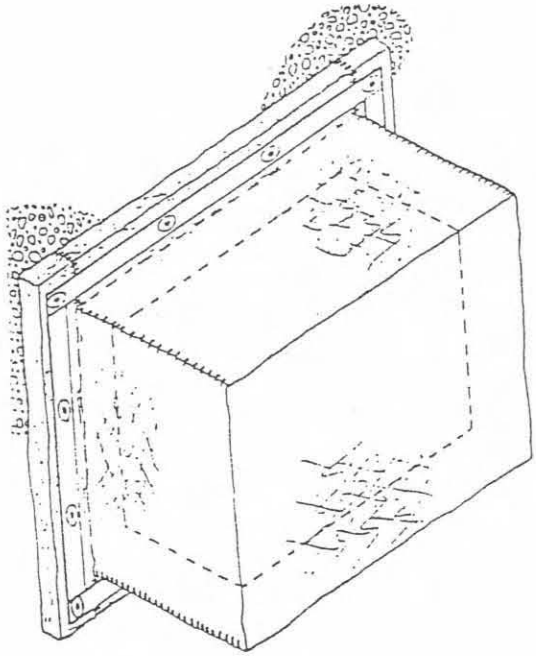

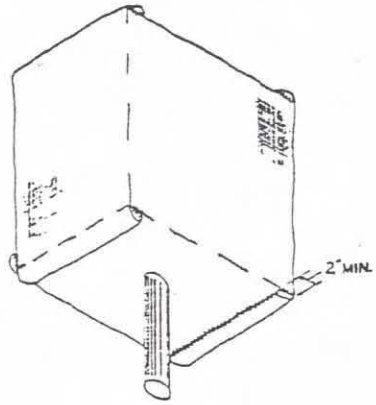

FIGURE 4

6.2.2 For equipment that will require frequent access, a framework may be used as shown in Figure 5 to provide ease of system removal.

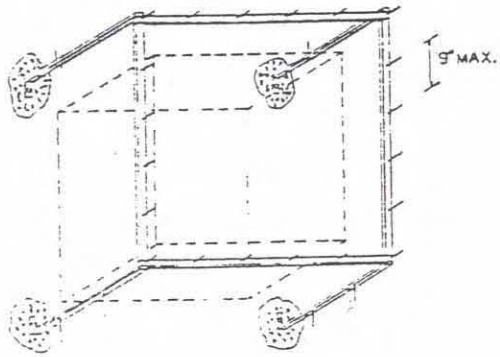

FIGURE 5

6.2.3 Concrete anchors used for floor, wall or ceiling installation shall be placed as determined by the Installer's Site Engineer.

6.2.4 Mounting of wrap to floor, wall or ceiling shall be done similar to that described in Procedure IP-8400.104.

6.2.5 All sewing shall be done in accordance with the requirements of Procedure IP-8400.104.

? even with stand-o

6.2.6 Ensure that no gaps exist in Wrap System. Minimum thickness of wrap at all points is two (2") inches. Fill as necessary with ceramic blanket to maintain minimum thickness.

7.0 ATTACHMENTS

None

ISSUE DESIGNATION IN THIS COLU NDICATES CURRENT CHANGE

CONTROL NO. LCN01

PROMATEC

PROGRESSIVE MATERIALS AND TECHNOLOGIES, INC.

PROCEDURE FOR:	PROCEDURE NUMBER:
INSTALLATION OF HEMYC PROTECTIVE WRAP SYSTEM - STRAIGHT SECTIONS OF CABLE TRAY	IP-8400.101

PROCEDURE ISSUE SUMMARY

ISSUE/DATE	PREPARER	APPROVED	COMMENTS
G ISSUE 01/25/95	L.C. Spriggs	R.J. Block	Revised as noted. Issue for use

ISSUE DESIGNATION IN THIS COLUMN INDICATES CURRENT CHANGE

INSTALLATION OF HEMYC PROTECTIVE WRAP SYSTEM STRAIGHT SECTIONS OF CABLE TRAY

1.0 PURPOSE

The purpose of this procedure is to assure that the installation of the HEMYC Protective Wrap System is consistent with the system as tested on various qualification tests. The Fire Qualification Test, referenced as PROMATEC CTP-1026, consisted of a One (1) Hour Fire Exposure, per ASTM E-119 criteria, including hose stream test in accordance with the American Nuclear Insurers Information Bulletin No. 5(79) entitled, "ANI/MAERP Standard Fire Endurance Test Method to Qualify a Protective Envelope for Class IE Electrical Circuits".

2.0 SCOPE

This procedure provides the methods and guidelines to be utilized for the installation of HEMYC Protective Wrap Systems.

3.0 REFERENCE

3.1 10CFR50, Appendix R

3.2 ANI Bulletin No. 5(79)

3.3 HEMYC Test CTP-1026

3.4 QCP-10001, Packaging, Shipping, Receiving, Handling and Storage for HEMYC Protective Wrap Components

3.5 QCP-10002, Fabrication Inspection for HEMYC Protective Wrap Components

3.6 QCP-10003, Installation Inspection Criteria for HEMYC Protective Wrap Components

3.7 HEMYC Protective Cable Wrap System Typicals; PROMATEC Drawings B-310, B-311, B-312 and B-313

4.0 DEFINITIONS

4.1 **BASE** - slotted and drilled, formed plate used in assembly of locking clamp.

4.2 **BRACKET** - galvanized "C" used in conjunction with a base and U-Bolt to make a locking clamp.

4.3 **FENDER WASHER** - a flat washer approximately 1-1/2" O.D. with a small inside hole to slip over rail studs. The function is to prevent or minimize damage to wrap by the locknut and to provide more wrap support.

4.4 **FRAMEWORK** - an assembly consisting of four struts and four clamps (friction or

locking) that surrounds the cable tray, normally spaced on eighteen (18") inch centers.

4.5 **FRICTION CLAMP** - pre-galvanized device used to connect framework to cable tray.

4.6 **LOCKING CLAMP** - galvanized assembly similar to friction clamp but is tightly bolted to the cable tray to prevent movement of the framework.

4.7 **LOCKNUT** - a specially designed, vibration resistant nut having a plastic insert on the threaded portion. These are used primarily on the locking clamp and the rail studs.

4.8 **RAIL** - long sections of strut with threaded anchors stud-welded to it. These are attached to the framework parallel to the tray. Rails provide anchors to secure the Wrap System and add longitudinal support to the framework.

4.9 **SPRING NUTS** - a specially designed rhomboid shaped nut with a spring permanently attached that is used to secure clamps to the struts.

4.10 **STRUTS** - lightweight, pre-galvanized channel used to provide structural support to the Wrap System.

4.11 **U-BOLT** - a "U" shaped bolt bent to provide attachment of locking clamp to cable tray.

4.12 **WRAP** - a fireproof product consisting of ceramic fiber material sewn into an envelope of fireproof fabric.

5.0 RESPONSIBILITIES

5.1 The authorized Installer's ENGINEERING DEPARTMENT shall be responsible to define the scope of work as prescribed on the applicable contract documents and provide the appropriate drawings, specifications, requirements, instructions, etc., to the department responsible for installation.

This department shall also be responsible to provide liaison with applicable client personnel and other internal departments to assure smooth flow of communication.

5.2 The authorized Installer's PRODUCTION DEPARTMENT shall be responsible for the identification and scheduling of work to be performed as defined on the documents furnished by Engineering.

G 5.3 The Installer's, as trained and certified by PROMATEC, shall be responsible for performance of installation activities herein prescribed.

G 5.4 The Installer's QUALITY CONTROL PERSONNEL, as trained and certified by PROMATEC, shall be responsible for appropriate inspection, documentation and monitoring.

6.0 PROCEDURE

6.1 Locking Clamp Assembly (See Figure 1).

G 6.1.1 Attach U-Bolt to base by sliding U-Bolt through slots in base. U-Bolt and base plate may be turned 180°.

ISSUE DESIGNATION IN THIS COLL NDICATES CURRENT CHANGE

ISSUE DESIGNATION IN THIS COLU DICATES CURRENT CHANGE

G

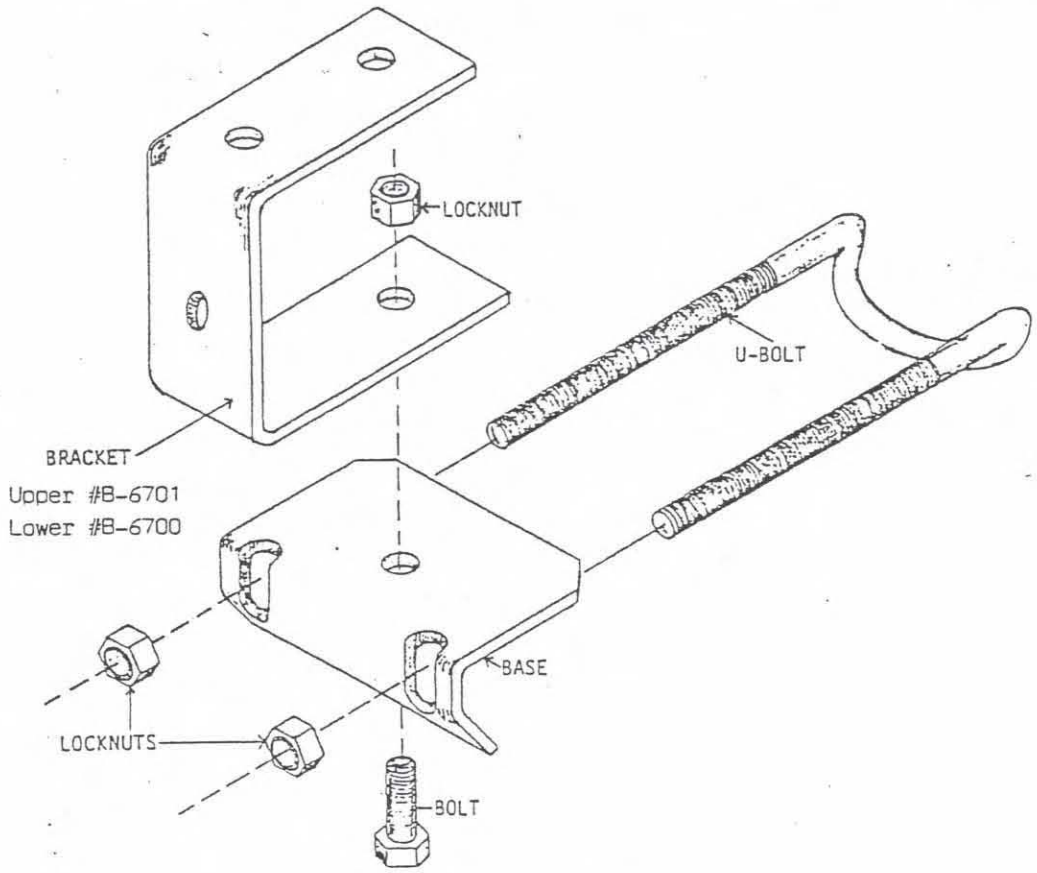

LOCKING CLAMP - ASSEMBLY

FIGURE 1

6.1.2 Secure U-Bolt by threading locknuts onto legs until threads contact nylon insert in locknut. DO NOT TIGHTEN.

6.1.3 Insert 1/4" x 3/4" - 20 Thread Bolt through hole in bottom of base and through hole on long leg of bracket. For cable tray 90° or 45° bend sections, two clamp bases may share this bolt.

6.1.4 Thread locknut onto bolt and tighten. Ensure that a minimum of one (1) full thread is visible above the locknut. Keep bracket as square as possible in relation to base.

6.1.5 For alternate cable tray types, the Installer's Site Engineer shall determine the type of clamping devices to be utilized. (Alternate clamping devices shall, as a minimum, provide adequate support similar to those devices utilized in the fire test.)

6.2 Framework Assembly and Installation

6.2.1 Insert Spring nuts near ends of strut sections.

6.2.2 Attach clamps to each end of horizontal struts using bolt and lockwasher threaded into spring nut. (Written instruction for installation of alternate clamping devices shall be delineated on site specific addendums to this and/or other procedures.)

G When necessary for additional support, horizontal strut may be attached to an adjacent support using the #B-6141 flat bracket. In order to match existing interferences, horizontal and side struts may be installed at acute or obtuse angles.

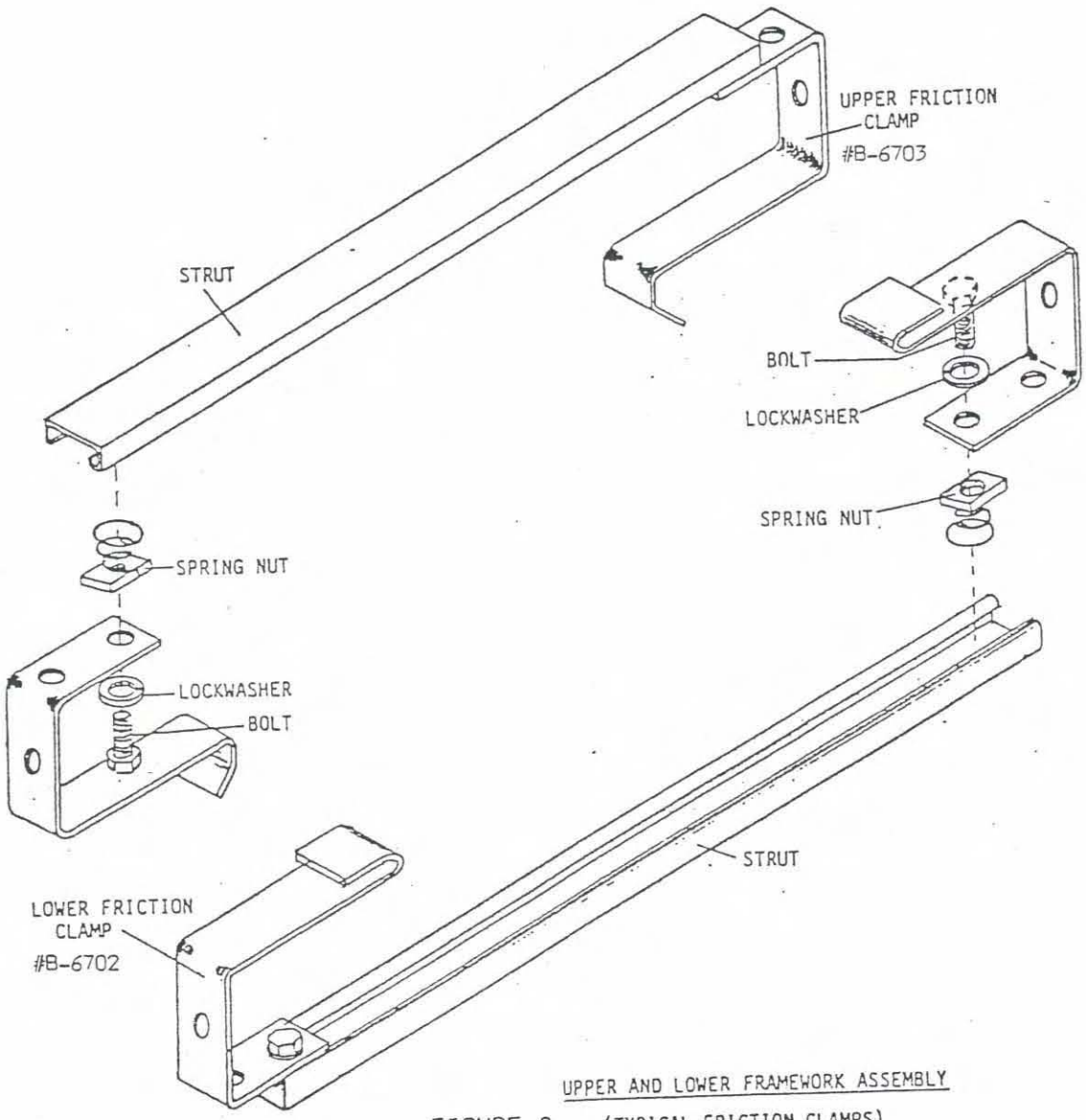

UPPER AND LOWER FRAMEWORK ASSEMBLY

FIGURE 2 (TYPICAL-FRICTION CLAMPS)

ISSUE DESIGNATION IN THIS COLL .DICATES CURRENT CHANGE

6.2.3 Install clamp and strut assembly onto cable tray on approximate eighteen (18") inch centers. At least every seventh assembly should be locking clamps. Additional locking clamps may be installed if required by Installer's Site Engineer. Clamps may be mixed as determined by the Installer's Site Engineer (See Figure 3A and Figure 3B). Do not damage cable during installation.

G #B-6700 and #B-6701 brackets may be bent as necessary to install framework. Two (2") inch minimum air space to be maintained in all directions between the outside of the tray and the outside of the struts, unless approved by FCR.

ISSUE DESIGNATION IN THIS COLUMN INDICATES CURRENT CHANGE

FRICTION CLAMP ASSEMBLY-TYPICAL

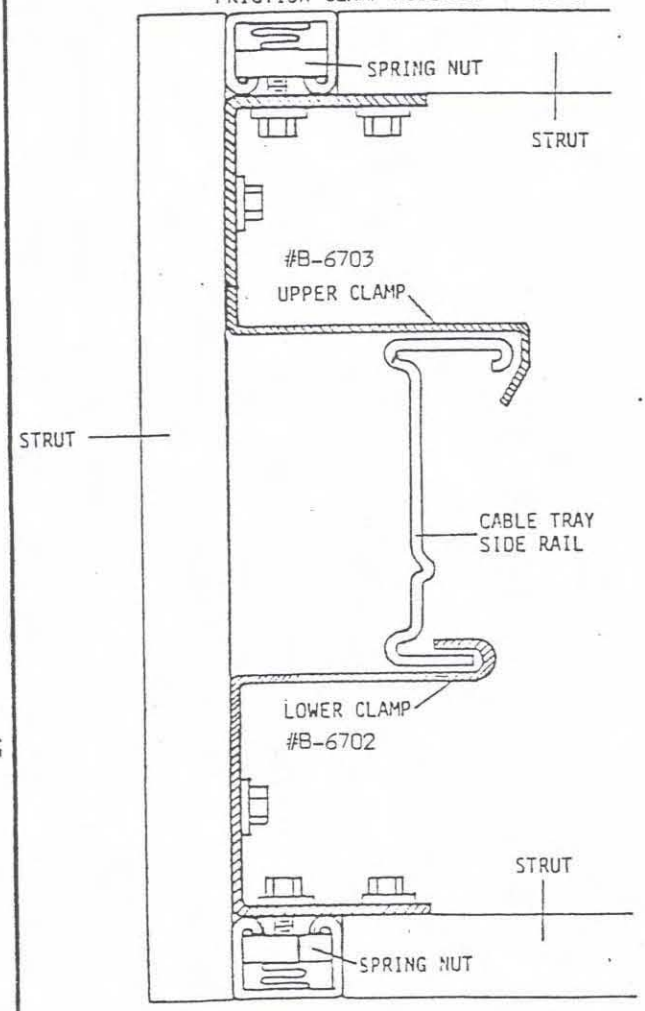

FIGURE 3A

LOCKING CLAMP ASSEMBLY-TYPICAL

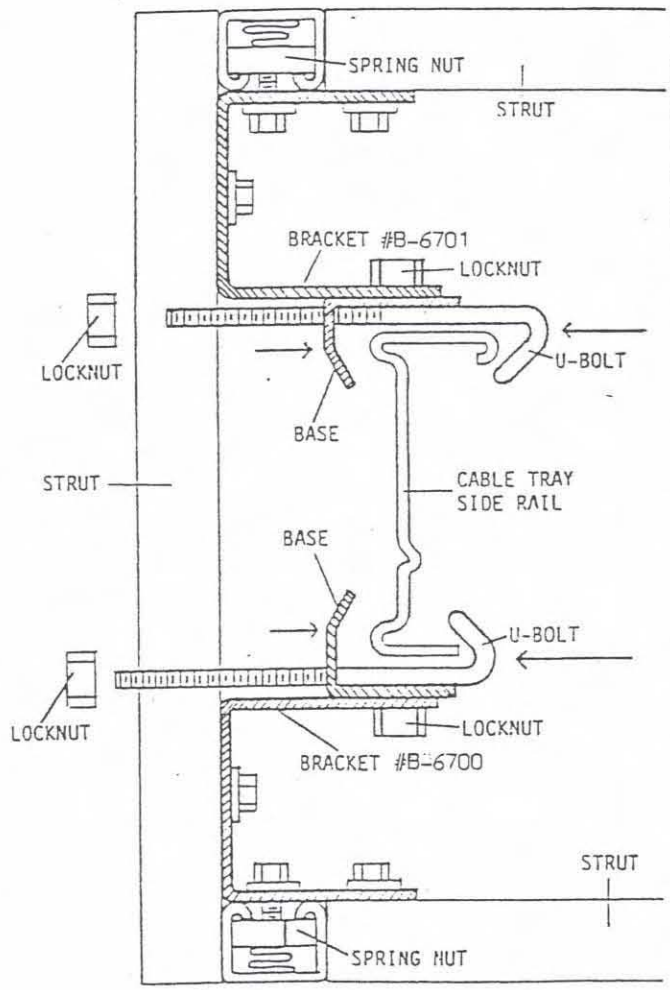

FIGURE 3B

G 6.2.4 Attach side struts to horizontal assemblies using bolt and lockwasher threaded into spring nut. Strut may need to be moved up or down to facilitate bolt insertion. (See Figure 4.) In order to match existing interferences, horizontal and side struts may be installed at acute or obtuse angles.

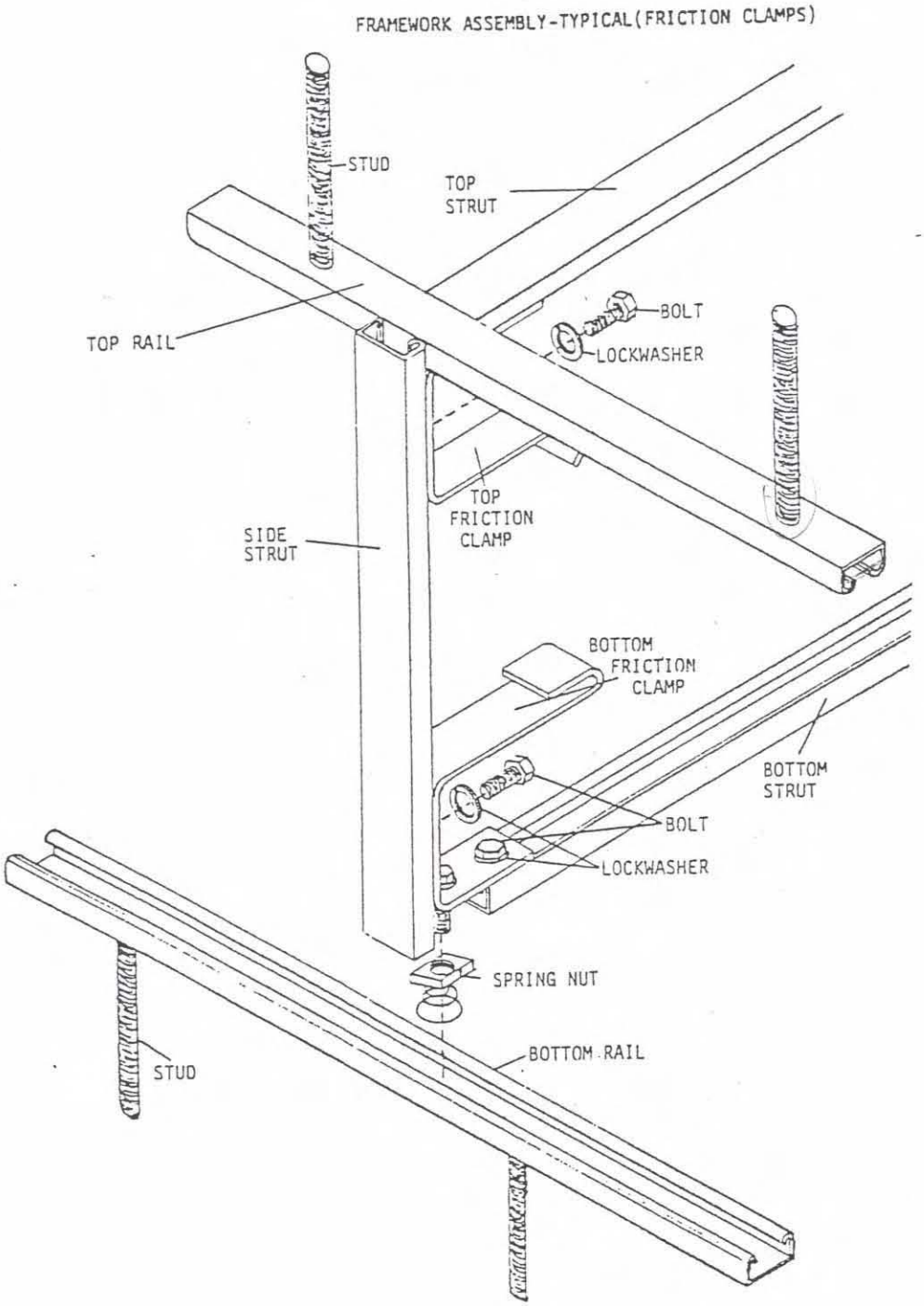

FIGURE 4

ISSUE DESIGNATION IN THIS COLU ↓DICATES CURRENT CHANGE

ISSUE DESIGNATION IN THIS COLUI ıDICATES CURRENT CHANGE

6.2.5 Insert spring nuts into rails on approximate eighteen (18") inch centers.

6.2.6 With the framework sections placed on approximate eighteen (18") inch centers (± 1"), attach rails using bolts and lockwashers.

6.2.7 Check to ensure that side struts are flush (± 1/4") with the rails and firmly tighten bolts to ensure side struts to clamps.

6.2.8 Firmly tighten bolts to ensure rails to clamps.

6.2.9 Remove gaps, if any, between rails and horizontal strut by pulling on opposing side strut or rail and firmly tighten bolt to secure horizontal struts.

6.2.10 Firmly tighten locknuts on positive clamp U-Bolt to secure framework.

6.2.11 Frameworks may be shifted, if necessary, by loosening bolt to rail, moving framework as required, and retightening bolt.

6.3 Wrap Installation

6.3.1 Assemble materials, wraps, washers, nuts, etc., in area of cable tray to be protected.

6.3.2 For ease of installation either the sides or bottom wrap may be placed on the framework first. The top blanket should be the last blanket to be placed on the framework in order to have ease of access to cables.

6.3.3 Attach side wraps to top rails by forcing wraps onto studs (Use of pointed instrument, such as a punch, to start holes in wraps is suggested). Ensure the wrap is secured to studs. Impale wrap (inside filler material) at least two (2") inches past the edge of the stud. (See Figure 5.)

[CONTINUED ON NEXT PAGE]

ISSUE DESIGNATION IN THIS COLU NDICATES CURRENT CHANGE

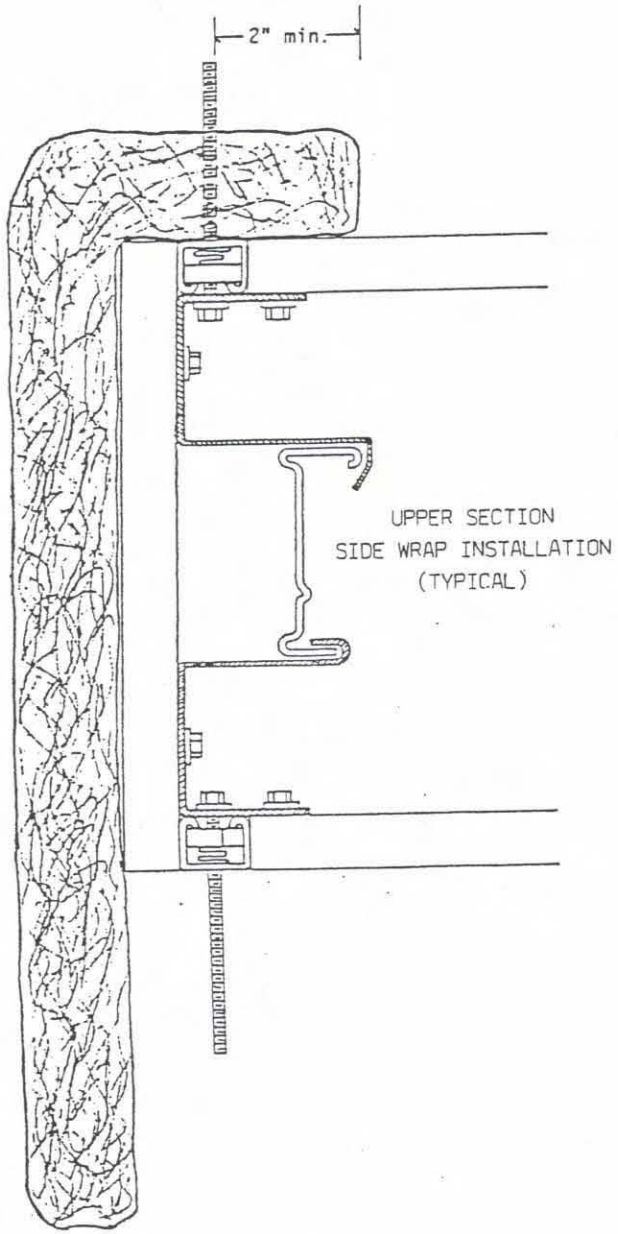

FIGURE 5

6.3.4 Install bottom wrap onto bottom rails. This is easier if both sides are done at the same time working from one end. Use fender washers and locknuts to hold the wrap onto the studs temporarily. Do not tighten the locknuts or damage the plastic insert. (See Figure 6.) If locknut is damaged, replace with a new one.

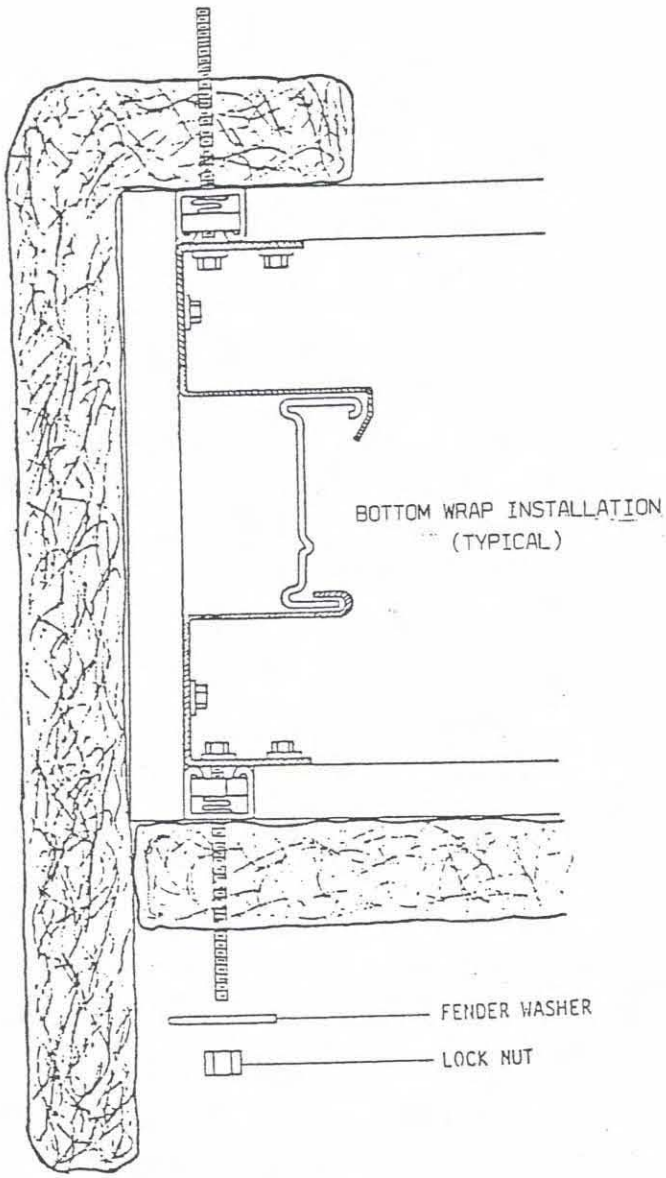

FIGURE 6

ISSUE DESIGNATION IN THIS COLU DICATES CURRENT CHANGE

6.3.5 Attach lower end of side wraps to bottom rail. This is best accomplished by removing, one at a time, a fender washer and locknut supporting the bottom wrap, forcing the side wrap onto the stud and re-installing the fender washer and locknut. Make sure that the side wrap extends a minimum of two (2") inches past the studs. (See Figure 7.)

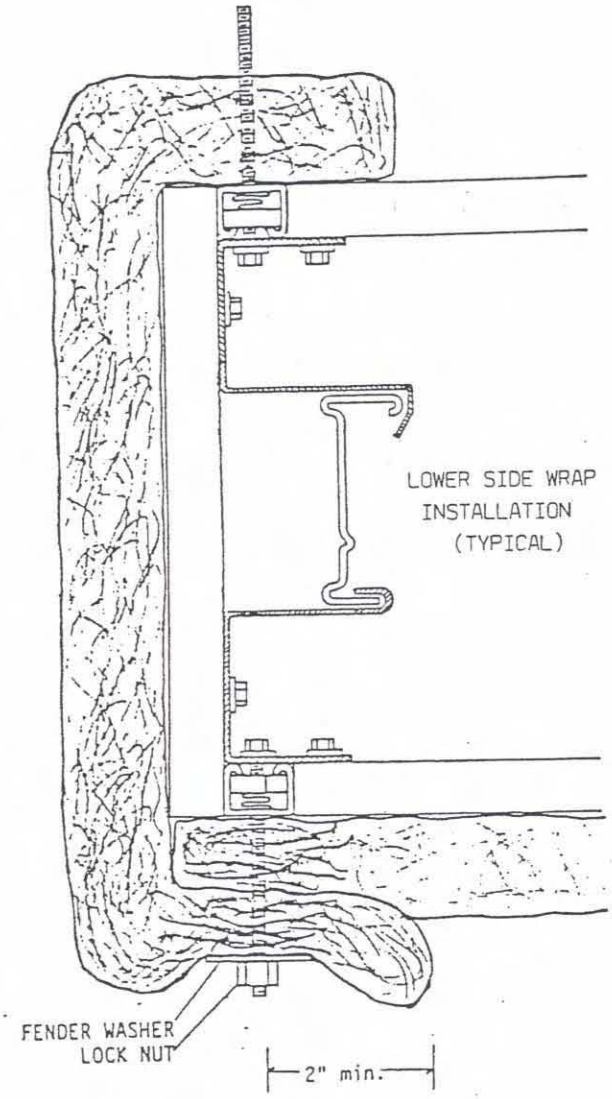

FIGURE 7

ISSUE DESIGNATION IN THIS COLU ıDICATES CURRENT CHANGE

6.3.6 Place top wrap on top framework approximately centered. Push wrap onto studs and install fender washer and locknuts. (See Figure 8.)

6.3.7 Tighten locknuts onto studs until the wraps are compressed one-fourth to one-half (1/4" - 1/2") inches.

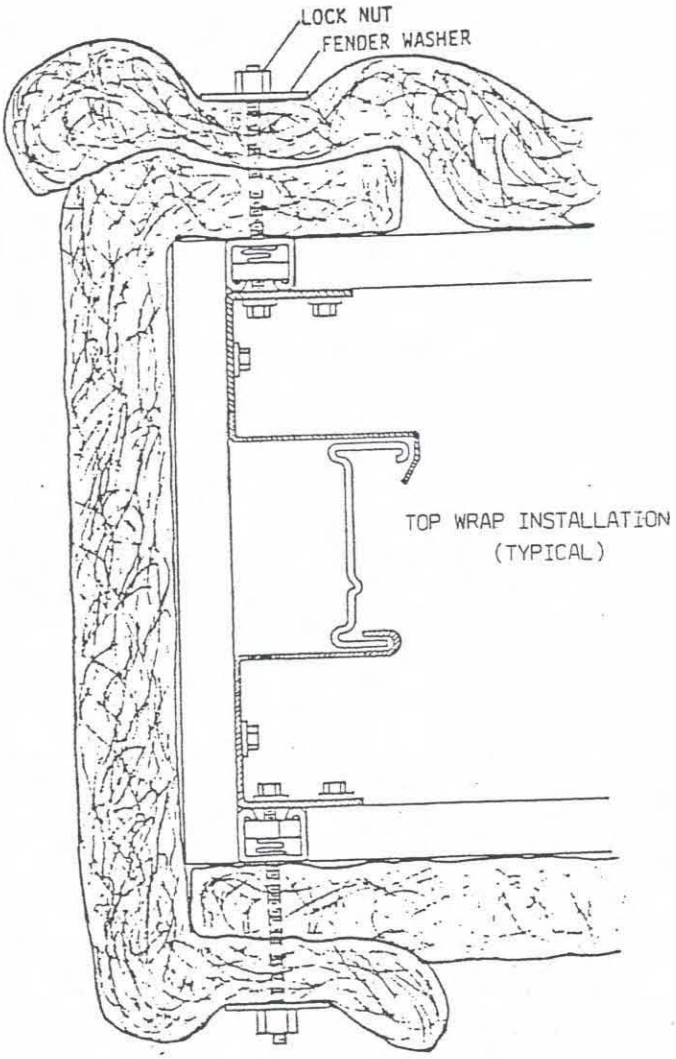

FIGURE 8

ISSUE DESIGNATION IN THIS COLU DICATES CURRENT CHANGE

ISSUE DESIGNATION IN THIS COLU .DICATES CURRENT CHANGE

G 6.3.8 At Wrap System continuation joints, the continuing Wrap System must overlap four to six (4" - 6") inches onto the other system. (See Figure 9.) Additional studs may be required as determined by Installer's Site Engineer. These studs are to be installed by Construction or any required or additional framework rail or strut where Wrap System needs additional support. In some cases, pin rail may need to be installed in place of strut. Engineering approval is not required for additional support.

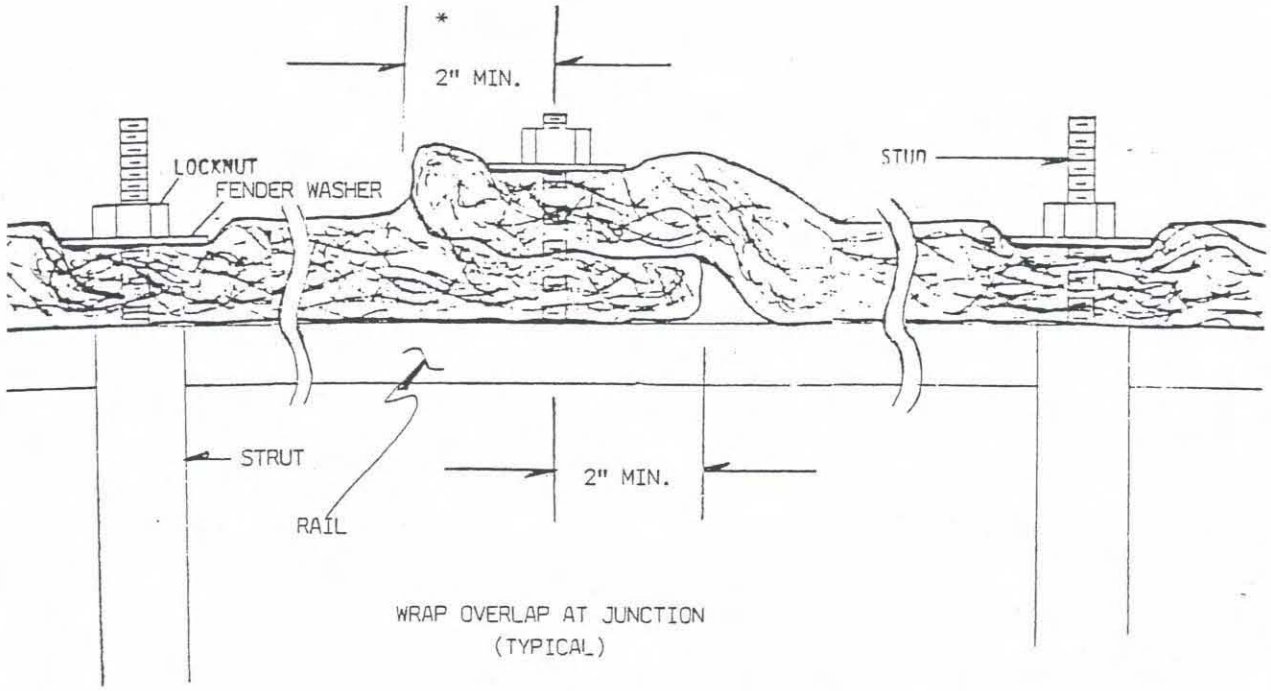

* SEE PARA 6.3.9 WHEN EXTERIOR BLANKET DOES NOT EXTEND BEYOND THE STUDS THE REQUIRED 2" MINIMUM.

FIGURE 9

6.3.9 In those situations where the exterior blanket at any joint does not extend beyond the studs the recommended two (2") inch minimum, an overlap of less than two (2") inches used in conjunction with a continual quartz thread stitching along the joint is an acceptable alternate.

6.3.10 Stagger Wrap System continuation joints so that only opposite sides stop at any one stud (two side wraps or top and bottom wrap). No more than three thicknesses of wrap should be on any one stud.

ISSUE DESIGNATION IN THIS COLUMN INDICATES CURRENT CHANGE

FABRICATION PROCEDURE FOR THREE HOUR FIRE M.T. BARRIER COMPONENTS

1.0 PURPOSE

The purpose of this procedure is to assure that the fabrication of the Three Hour Fire M.T. Barrier Components are consistent with the system components as tested in PROMATEC Three Hour Fire qualification tests.

2.0 SCOPE

The PROMATEC Three Hour M.T. Barrrier System is comprised of Three compponent assemblies: 1) Inner Blanket Assembly, 2) Moisture Barrier, 3) Outer Blanket Assembly. This procedure shall address the Inner Assembly and Outer Assembly only and shall provide the methods and guidelines utilized in the fabrication of these assemblies.

3.0 REFERENCES

3.1 Fabrication Order (Form QC-59). See Attachment 7.1.

3.2 QCP-0042 -- Fabrication Inspection for PROMATEC protective wrap envelopes (Blankets).

3.3 QCP-0041 -- Packaging, shipping, receiving, handling and storage of PROMATEC protective wrap components

4.0 DEFINITIONS

4.1 Hot Side -- The outermost surface of a blanket assembly. See Attachment 7.2, Figure 3.

4.2 Cold Side -- The innermost surface of a blanket assembly. See Attachment 7.9, Figure 7.

5.0 RESPONSIBILITY

5.1 The Construction Manager or designee shall be responsible for the preparation and processing Fabrication Orders (QC-59) in accordance with PROMATEC field engineering and/or client requirements.

5.2 The Technical Services Manager or designee shall be responsible for providing assistance and direction for unique design configurations.

5.3 The authorized fabricator shall follow Fabrication Order form (QC-59), fabrication procedure, and Quality Control Procedure. The Quality Assurance Manager or designee shall be responsible for the development and implementation of appropriate procedures for shop field and source inspection of fabricated components to verify conformance with design requirements.

ISSUE DESIGNATION IN THIS CO. N INDICATES CURRENT CHANGE

6.0 PROCEDURE

6.1 This procedure applies to the fabrication of the Three Hour M.T. Barrier Components by PROMATEC at the shop and field level, by PROMATEC qualified fabrication sources, and by client or their contractors (when written agreements allow).

6.2 Fabrication performed by any organization other than PROMATEC shall require qualification of such organizations and approval of programs established for controlling fabrication.

6.3 PROMATEC Quality Assurance shall have right of access for source inspection and/or audit to verify compliance with design and quality requirements.

6.4 Prior to the fabrication of any blankets the applicable portions of Fabrication Order Forms (QC-59) shall be completed as outlined in Fabrication Inspection (QCP-0042) guideline. Only acceptable materials listed on Attachment 7.2 will be utilized for fabrication.

6.5 Fabrication of Inner Blanket Assembly

6.5.1 Cut alumina/silica fiber blanket to proper dimensions per Fabrication Order Form (QC-59), to assure finished edge. Cut alumina/silica fiber back six inches as shown on fabrication order to allow for ship lap. See figure 1, Attachment 7.3.

6.5.2 Cut two pieces of fiberglass cloth to proper dimensions for alumina/silica blanket. Allow enough fiberglass cloth to assure all ends have a min. 3/8" tuck. See figure 2, Attachment 7.4.

6.5.3 Place fiberglass cloth and alumina/silica fiber blanket in appropriate position, allow for 3/8" min. tuck on ends and hog ring all edges of fiberglass cloth on hot side of envelope. For spacing of hog rings and clarification of finish edge see figure 3, Attachment 7.5.

6.6 Fabrication of Outer Blanket Assembly

6.6.1 The outer blanket assembly consists of two subassemblies, enveloped in silica dioxide fabric cloth. These subassemblies consist of, alumina/silica fiber blanket and powder (Honey Comb and/or straight tube) envelope.

6.6.2 Fabrication of the powder envelope (Honey Comb).

6.6.2.1 Cut three pieces of coated fiberglass cloth to dimensions assuring proper finished edges as per fabrication order form.

6.6.2.2 Lay all three pieces of coated fiberglass cloth together and sew a single stitch the length of the fabric 1/2"(±1/4") from the edge on one side only.

6.6.2.3 Sew top and center layers of cloth 3/8"(±1/8") form first sewn edge. Sew with a single stitch the length of the fabric.

6.6.2.4 Fold bottom end of fabric (across grain of tubes) 1/2"(±1/4") and sew across the length of fold with a single stitch.

6.6.2.5 Alternate sewing with a single stitch the length of the fabric from the top and center layers and the bottom and center layers every 7/8"(±1/8"). See figure 4, Attachment 7.6.

6.6.2.6 Fold bottom end of fabric (across grain of tubes) 1/2"(±1/4") and sew across the length of fold with a single stitch.

6.6.2.7 Fill each tube with powder to the size required for each assembly. As per Fabrication form (QC-59).

6.6.2.8 Fold top end of fabric (across grain of tubes) 1/2"(±1/4") and sew across fabric with a single stitch to seal tubes. See figure 5, Attachment 7.7.

6.6.3 Alternate-Fabrication of the powder envelope (straight tubes).

6.6.3.1 Cut two pieces of coated fiberglass cloth to dimension assuring proper finished edges as per fabrication order form.

6.6.3.2 Lay the two pieces of coated fiberglass cloth together and sew a single stitch the length of the fabric 1/2"(±1/4") from the edge on one side only.

6.6.3.3 Continue to sew the length of the fabric every 1 5/8"(±1/8") from the first sewn edge with a single stitch. See figure 6, Attachment 7.8.

6.6.3.4 Fold bottom end of fabric (across grain of tubes) 1/2"(±1/4") and sew across the length of fold with a single stitch.

ISSUE DESIGNATION IN THIS CO. ▼ INDICATES CURRENT CHANGE

6.6.3.5 Fill each tube with powder to the size required for each assembly. As per Fabrication form (QC-59)

6.6.3.6 Fold top of fabric (across fabric of tubes) 1/2" (±1/4") and sew across fabric with a single stitch to seal tubes. Reference of finished assembly, see figure 5, Attachment 7.7.

6.7 Cut Alumina/Silica Fiber Blanket to proper dimensions per Fabrication Order Form (QC-59) to assure finished edge.

6.7.1 Cut two pieces of silica dioxide cloth to proper dimensions to make one envelope for alumina/silica fiber blanket and powder assembly.

6.7.2 Place silica dioxide cloth, alumina/silica fiber blanket, and powder assembly in proper layer. Adjust alumina/silica fiber blanket as shown on fabrication order to allow for 6" ship lap design. Hog ring silica dioxide cloth on cold side of outer blanket assembly. See figure 7, Attachment 7.9.

6.7.3 Alternate method for hog rings on outer blanket assembly, is the use of (Type Q-24) teflon coated thread.

6.7.4 Lacing hooks shall be placed 7-1/2"(±1/4") from finished edges. They shall be place on all top ship lap edges 1-1/2" (±1/4") from the edge. Lacing hooks to be spaced on maximum of 6" centers. See figure 8, Attachment 7.10.

6.8 Identification Markings of Inner and Outer Blankets

6.8.1 Identification markings shall be placed on every blanket assembly, both inner and outer at a minimum of two locations as follows:

a) In close proximity to one of the lengthwise edges on the hot side surface.

b) In close proximity to one of the end edges on the hot side surface.

c) Various project requirements may specify that these markings are also provided on the cold side surface.

6.8.2 These markings shall be the blanket number as shown on Fabrication Order Form (QC-59).

6.8.3 These markings shall be of a site approved waterproof paint and/or ink which will retain the marking, withstand weather deterioration, other handling effects and shall not be deleterious to the fabrics.

ISSUE DESIGNATION IN THIS COL. INDICATES CURRENT CHANGE

6.8.4 These markings shall be in character no less than 3/4" high.

6.8.5 Other Client approved methods of identification, i.e., tags, etc. may be used in lieu of blanket marking as described if required by project specification.

6.9 Multiple Pieces of Ceramic Fiber Blanket

6.9.1 Whenever multiple pieces of alumina/silica fiber blanket are utilized within one envelope the use of ship lap design is to be used, and darting with Quartz (Type Q-24) thread is to be used to avoid separation of the pieces of alumina/silica fiber blanket. See figure 9, Attachment 7.11.

7.0 ATTACHMENTS

7.1 Fabrication Order Form (QC-59)

7.2 Acceptable Material (Proprietary Information)

7.3 Figure 1

7.4 Figure 2

7.5 Figure 3

7.6 Figure 4

7.7 Figure 5

7.8 Figure 6

7.9 Figure 7

7.10 Figure 8

7.11 Figure 9

ISSUE DESIGNATION IN THIS CC ↓ INDICATES CURRENT CHANGE

PROMATEC

FABRICATION ORDER

PFO-

PROJECT NAME	CUSTOMER	CUSTOMER ORDER NO.	JOB NO.

TYPE _____ QUANTITY _____

LENGTH _____ WIDTH _____ THICKNESS _____ TOTAL FT^2 _____

SCHEMATIC DRAWING REF. _____ SCHEMATIC NO. _____

I.D. NO. _____

ORDERED BY _____ DATE _____

SKETCH

CERTIFICATE OF CONFORMANCE

We hereby certify that all items furnished were fabricated with materials provided by PROMATEC and conform to the requirements of Purchase Order No. _____.

Signature _____ Company _____ Date _____

PROMATEC QUALITY ASSURANCE ACCEPTANCE

Signature _____ Title _____ Date _____

ISSUE DESIGNATION IN THIS CL ↓ INDICATES CURRENT CHANGE

ATTACHMENT 7.2

Only approved materials as listed below shall be utilized in the fabrication of PROMATEC's protective wrap components.

1. Silica Dioxide Cloth

   a. Siltemp S84 and/or 84 SRWR
   b. Santex
   c. Refrasil

2. Fiberglass cloth (Inner Blanket).

   a. Alpha 76281-4634
   b. J.P. Stevens 3582 3910
   c. J.P. Stevens 2025
   d. Havaglass

3. Coated fiberlass cloth

   a. Alpha 76281-4634
   ~~b. J.P. Stevens 3582 3910~~

INNER OUTER not same as Figure 1

4. Alumina Silica Fiber Blanket - 1" and 1-1/2" nom.

   a. Johns Manville Cerablanket, 8# density 2400° F.
   b. Babcock & Wilcox Kaowool Blanket, 8# density 2300° F. Carborundum Durablanket, 8# density 2300° F.

5. Trihydrate Alumina Grade 30

   a. Alcoa-C30 and/or B. Solem-SB30

6. Hog Rings

   a. Spenaz 16SS-110
   b. Or approved equal

7. Lacing Hooks

   a. Alpha-Maritex 2-1/2" AML-1201-SS
   b. Erico Jones
   c. Or approved equal.

8. Nylon Thread

   a. Tex 90 Spun Kevlar

9. Quartz Thread

   a. Astroquartz - Type Q-24 teflon coated
      and/or
   b. Alphaquartz - Type Q-24 teflon coated

INNER BLANKET ASSEMBLY
ALUMINA/SILICA FIBER BLANKET

ONE - ONE HALF - TWO INCH THICK

NOT SAME AS 4.0

1" INNER
1½ OUTER
PER IP-001 4.1 & 4.3

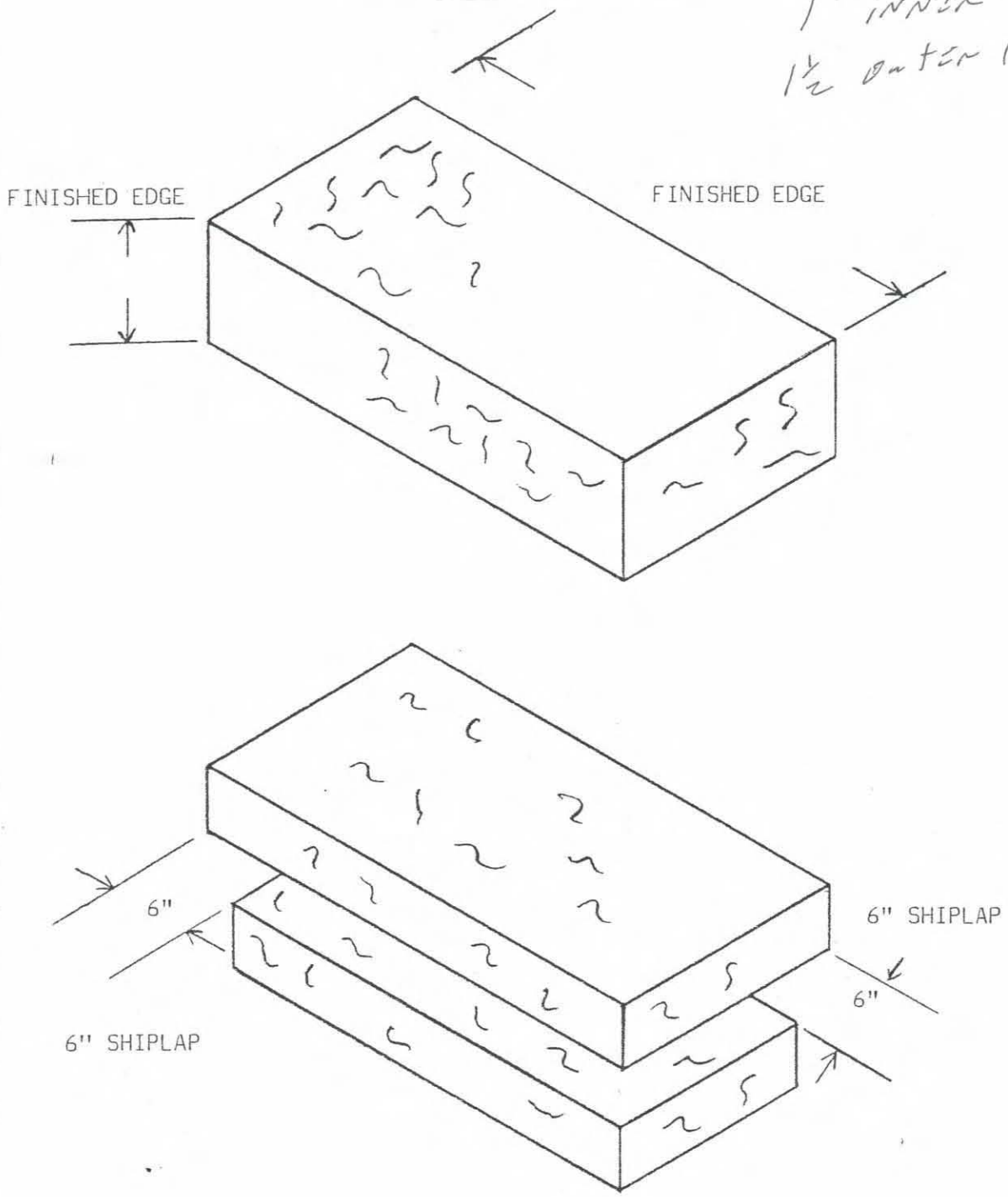

FIGURE 1

ISSUE DESIGNATION IN THIS COL. A INDICATES CURRENT CHANGE

INNER BLANKET ASSEMBLY

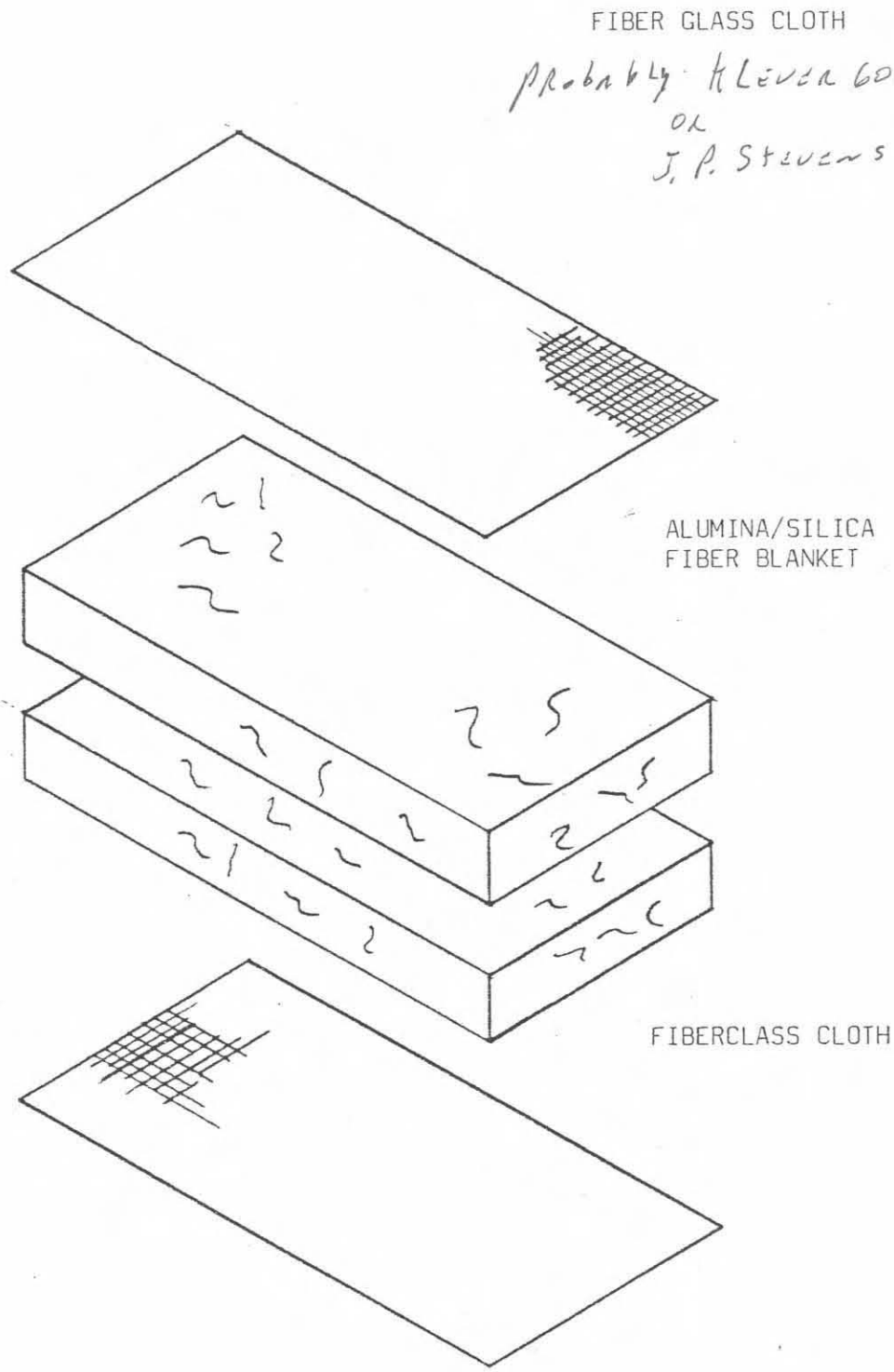

FIGURE 2

ISSUE DESIGNATION IN THIS CO N INDICATES CURRENT CHANGE

ISSUE DESIGNATION IN THIS COLUMN INDICATES CURRENT CHANGE

INNER BLANKET ASSEMBLY

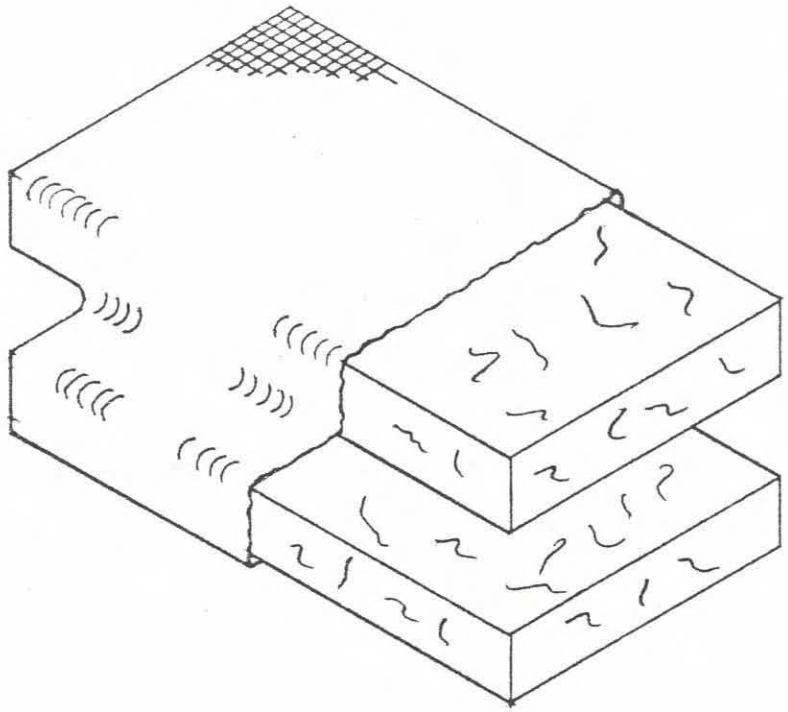

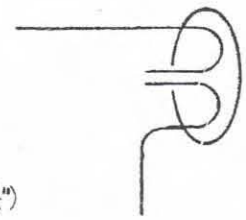

INNER BLANKET
ASSEMBLY

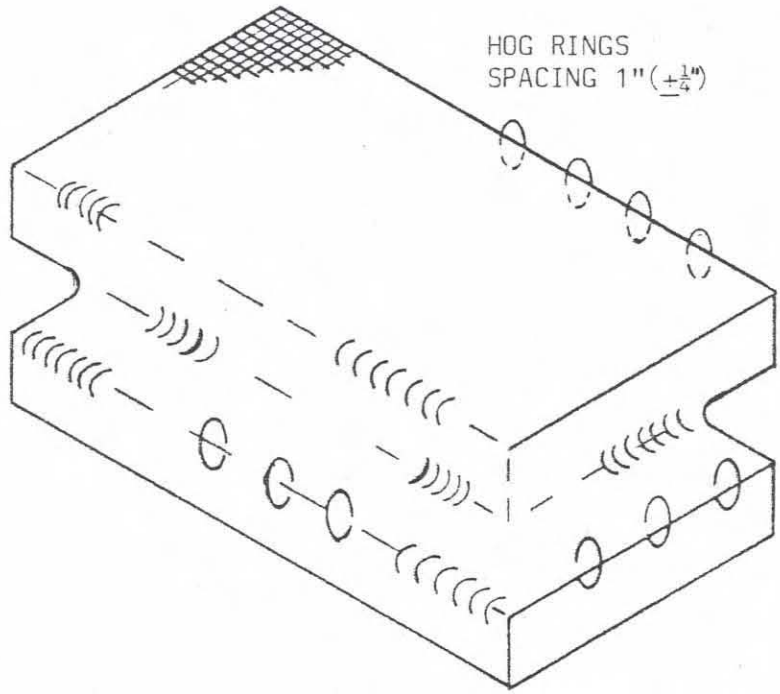

FIGURE 3

HONEY COMB TUBE ASSEMBLY

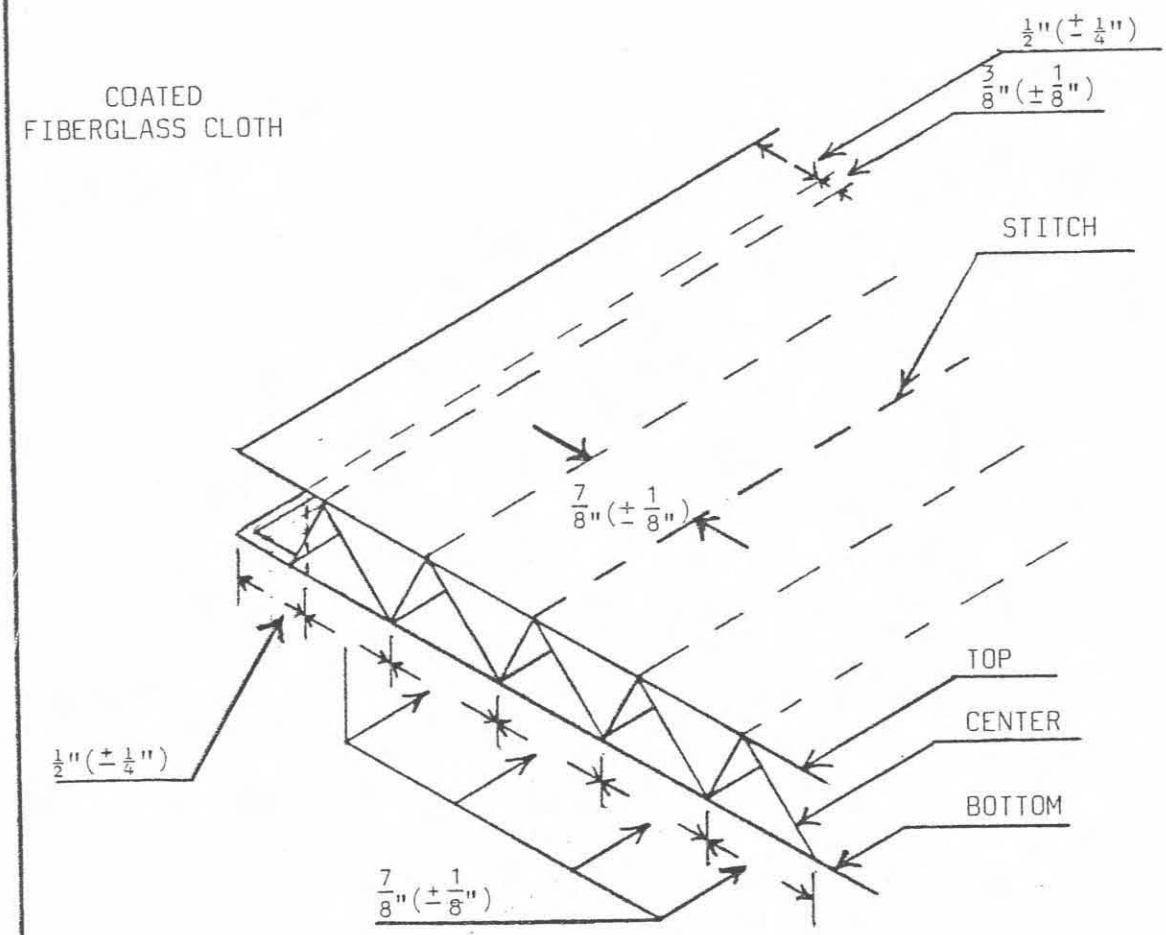

FIGURE 4

ISSUE DESIGNATION IN THIS CL N INDICATES CURRENT CHANGE

HONEY COMB AND/OR STRAIGHT TUBE POWDER ASSEMBLY

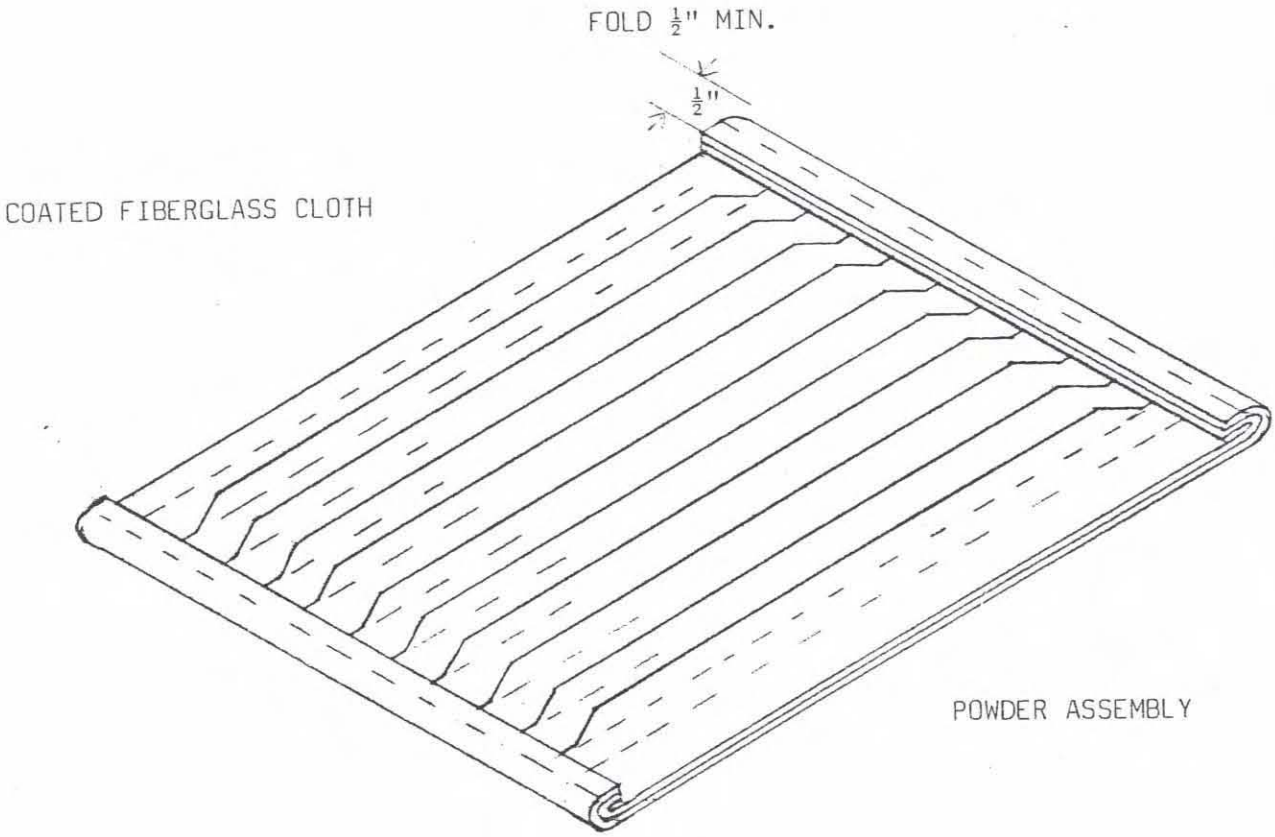

FIGURE 5

ISSUE DESIGNATION IN THIS COLUMN INDICATES CURRENT CHANGE

ISSUE DESIGNATION IN THIS L N INDICATES CURRENT CHANGE

STRAIGHT TUBE ASSEMBLY

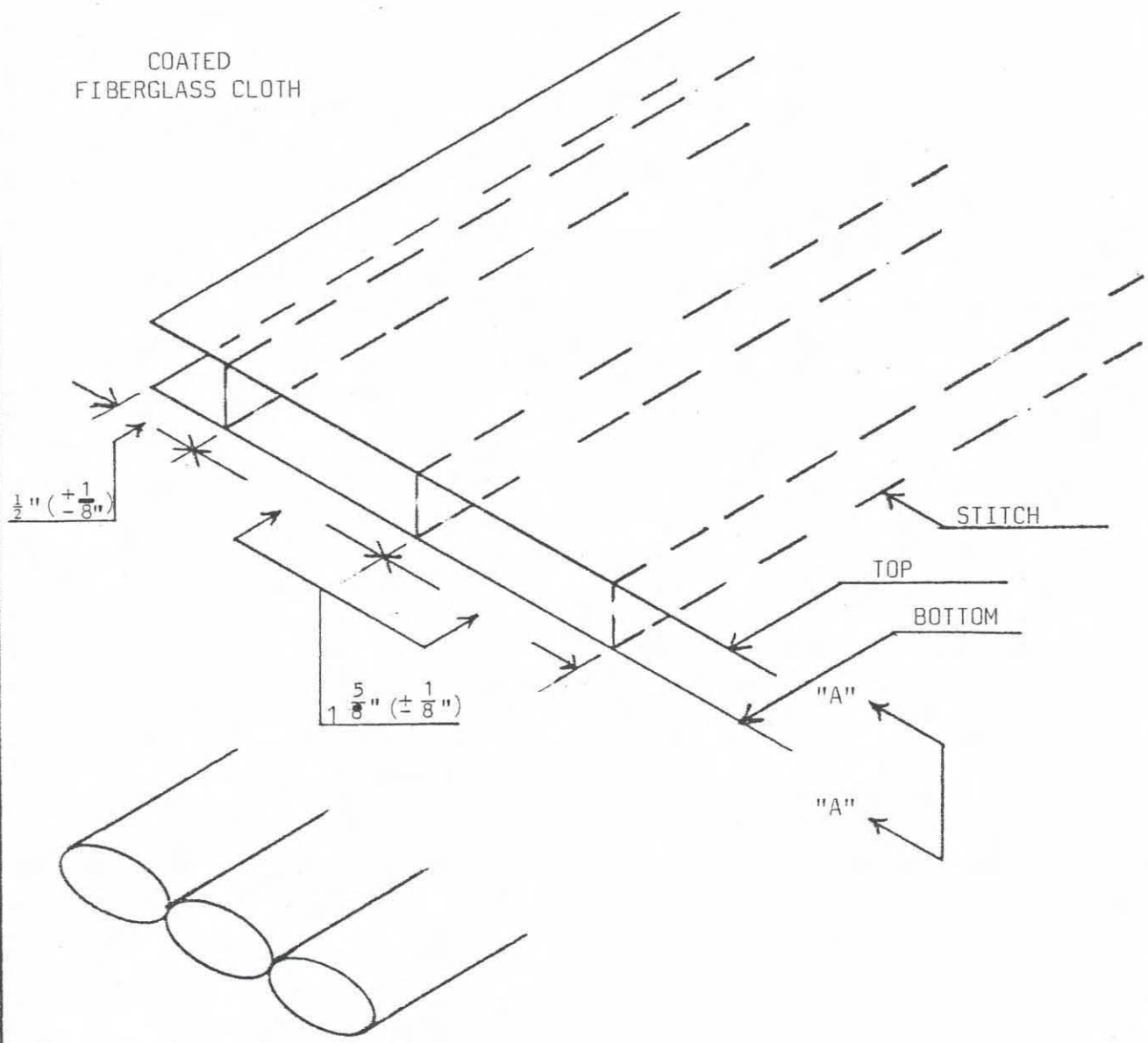

FIGURE 6

ISSUE DESIGNATION IN THIS C N INDICATES CURRENT CHANGE

OUTER BLANKET ASSEMBLY

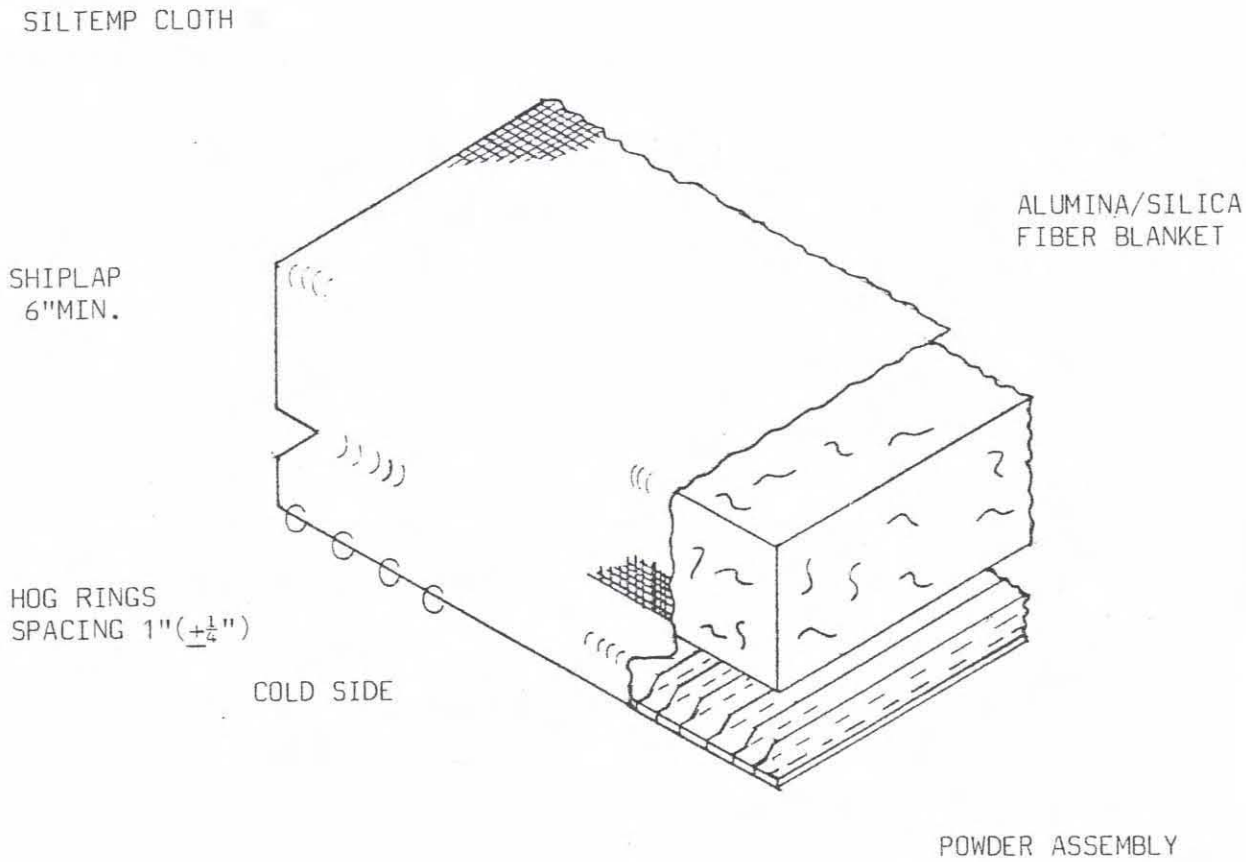

FIGURE 7

ISSUE DESIGNATION IN THIS C. IN INDICATES CURRENT CHANGE

OUTER BLANKET ASSEMBLY

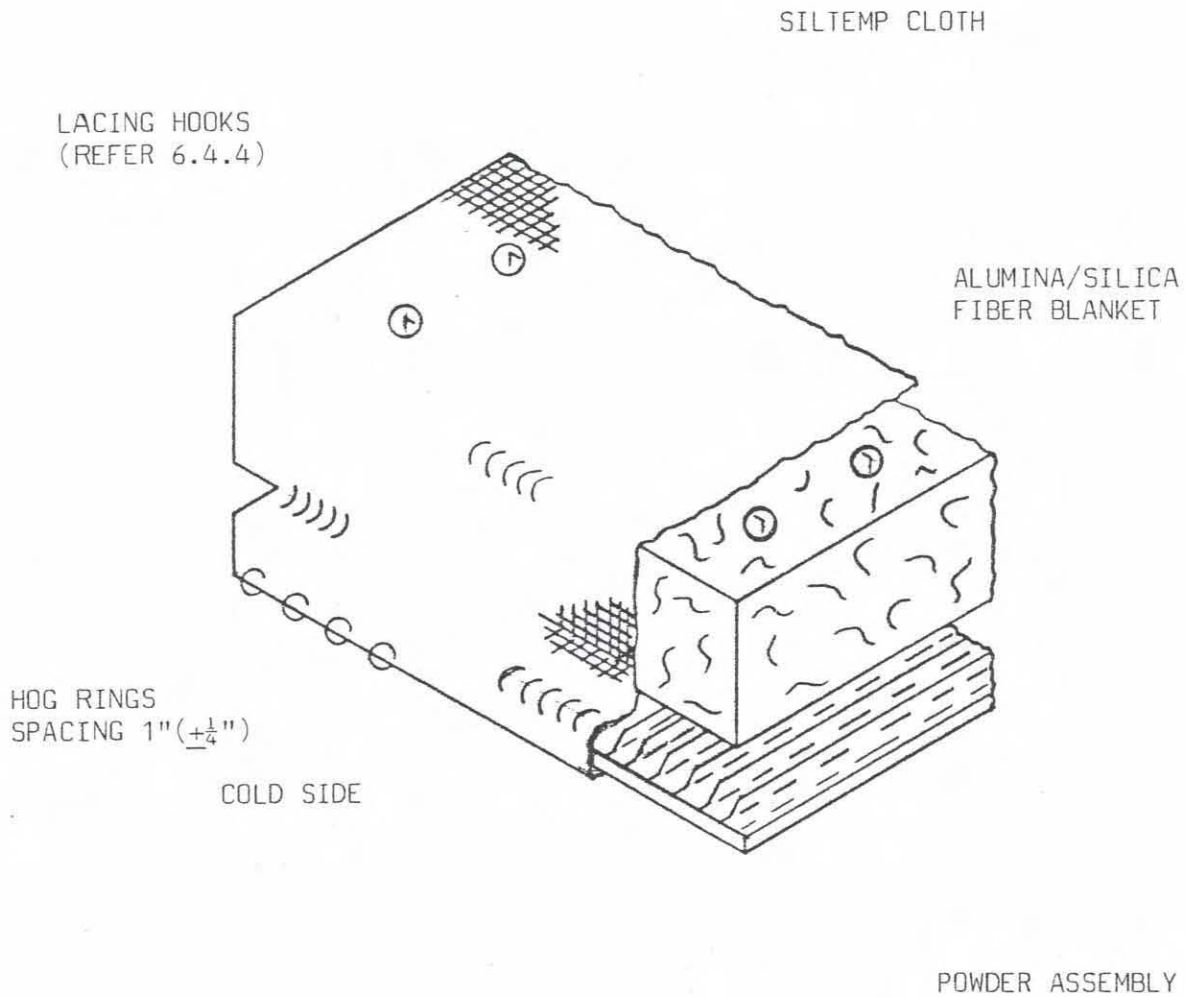

FIGURE 8

MULTIPLE ALUMINA/SILICA FIBER BLANKET

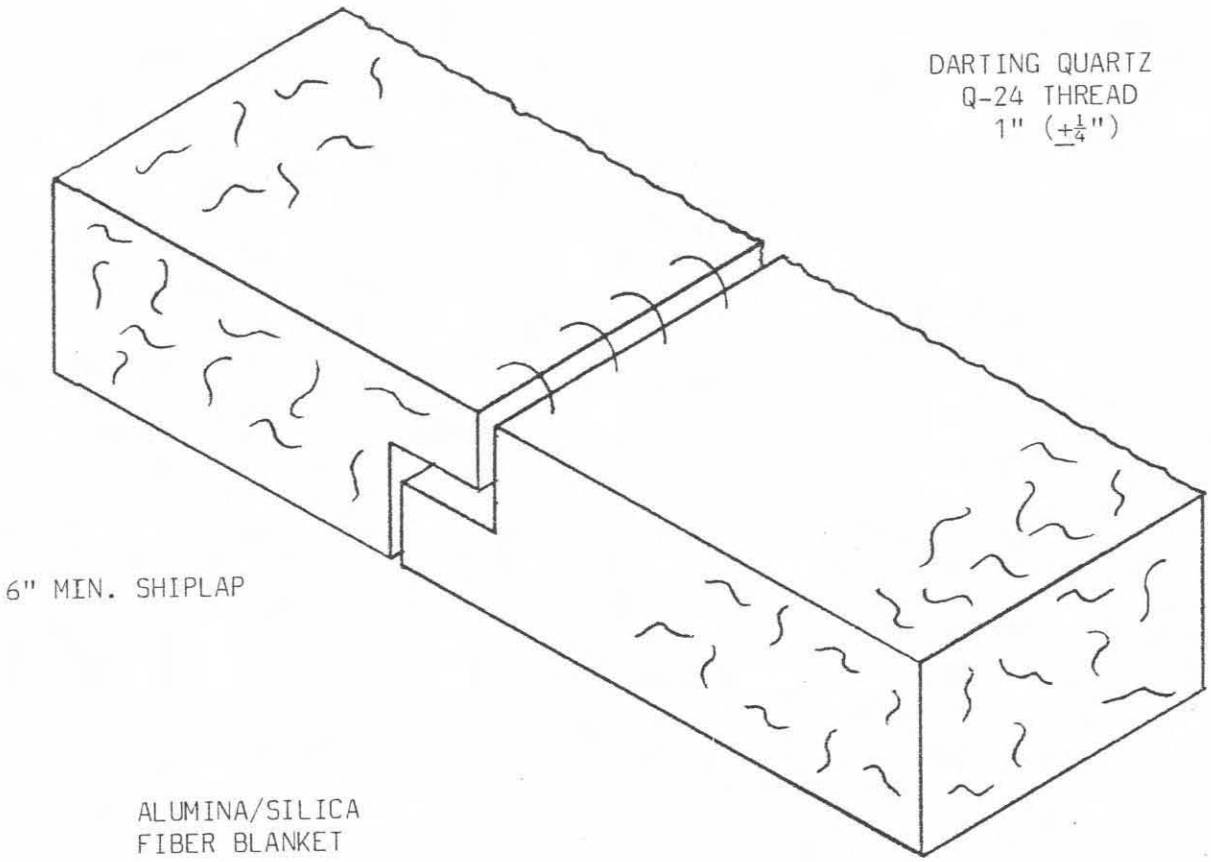

FIGURE 9

ISSUE DESIGNATION IN THIS C N INDICATES CURRENT CHANGE

ISSUE DESIGNATION IN THIS COLL INDICATES CURRENT CHANGE

INSTALLATION OF
THREE HOUR PROTECTIVE WRAP SYSTEMS
CONDUITS / THREE SIDED WRAP / CABLE DROPS

1.0 PURPOSE

To establish methods and guidelines for the installation of PROMATEC Three Hour Fire Protective Wrap Systems in accordance with established design criteria.

2.0 SCOPE

2.1 To provide methods and sequence steps for installation of inner blanket assemblies, foil barrier and the outer blanket assemblies.

2.2 To establish dimensional requirements for installation.

2.3 To provide requirements and methods for field repairs and modifications.

2.4 Inform craft personnel of the Quality Control inspection notification points to assure work does not proceed until such inspection is performed.

3.0 REFERENCE

3.1 QCP-0041, Installation Inspection of Three Hour Fire Protective Wrap Systems

3.2 Typical Design Details B-495 and B-496

4.0 DEFINITIONS

4.1 **INNER BLANKET** - total one (1") inch thickness of alumina silica blanket enveloped with fiberglass cloth.

4.2 **FOIL BARRIER** - .002 thick stainless steel foil.

4.3 **OUTER BLANKET** - a multi-layered outer blanket assembly consisting of a one and one-half (1-1/2") inch alumina silica blanket and a separate prefabricated fiberglass assembly containing a powdered ingredient with either both enveloped by a fire resistant outer fabric or as two separate components with alumina silica blanket enveloped with a fire resistant fabric.

5.0 RESPONSIBILITIES

5.1 The authorized Installer's ENGINEERING DEPARTMENT shall be responsible to define

the scope of work as prescribed on the applicable contract documents and provide the appropriate drawings, specifications, requirements, instructions, etc., to the department responsible for installation.

This department shall also be responsible to provide liaison with applicable client personnel and other internal departments to assure smooth flow of communication.

5.2 The authorized Installer's PRODUCTION DEPARTMENT shall be responsible for the identification and scheduling of work to be performed as defined on the documents furnished by Engineering.

5.3 The Installer's, as trained and certified by PROMATEC, shall be responsible for performance of installation activities herein prescribed.

5.4 The Installer's QUALITY CONTROL PERSONNEL, as trained and certified by PROMATEC, shall be responsible for appropriate inspection, documentation and monitoring.

6.0 PROCEDURE

6.1 Only approved materials as supplied by PROMATEC, issued under controlled conditions, shall be used in the installation, modification and repair of Three Hour Fire Protective Wrap System components.

6.2 Conduit/Junction Box Installation

6.2.1 Installation of Inner Blanket Assemblies
(Refer to FIRST STEP as shown on Figure 1)

6.2.1.1 Install first inner blanket around the conduit/junction box assuring that the shiplap joint is a tight as possible. Maximum allowable gap is one-half (1/2") inch.

6.2.1.2 Duct tape may be utilized to hold blanket firmly in place (duct tape may be applied completely around blanket to provide tape to tape adhesion).

6.2.1.3 Install subsequent blankets per 6.2.1.1 assuring that lengthwise shiplap joints are as tight as possible. Maximum allowable gap is one-half (1/2") inch.

6.2.1.4 Duct tape per 6.2.1.2.

6.2.1.5 Notify Quality Control for inspection prior to proceeding.

6.2.2 Installation of Stainless Steel Foil Barrier
(Refer to SECOND STEP as shown on Figure 1)

6.2.2.1 Install foil strips lengthwise around the conduit/junction box providing a MINIMUM six (6") inch overlap on ends and edges.

6.2.2.2 In cases where a six (6") inch overlap cannot be achieved due to conduit curvature, foil strips shall be installed with a minimum two (2") inch overlap.

ISSUE DESIGNATION IN THIS COLUMN INDICATES CURRENT CHANGE

6.2.2.3 Duct tape may be utilized to hold foil strips firmly in place. Duct tape and/or aluminum foil tape may be used at the edges of the strips if gap appears excessive due to conduit curvature.

6.2.2.4 Notify Quality Control for inspection prior to proceeding.

6.2.3 Installation of Outer Blanket Assemblies
Refer to THIRD STEP as shown on Figure 2)

6.2.3.1 Install first outer blanket around conduit/junction box assuring that the shiplap joint is as tight as possible. Maximum allowable gap is one-half (1/2") inch.

6.2.3.2 Connect ends by fastening 16 gauge stainless steel tie wire between corresponding lacing hook. Recheck final positioning and tighten securely exercising caution to prevent blanket damage.

NOTE: An additional tie wire may be used after blanket is in final position as necessary to assure a snug fit.

F 6.2.3.3 Install subsequent blankets per 6.2.3.1 and 6.2.3.2 assuring that lengthwise shiplap joints are properly aligned.

F 6.2.3.4 Connect adjoining blankets at circumferential shiplap joints by fastening 16 gauge stainless steel tie wire between each corresponding lacing hook.

NOTE: An additional tie wire may be used after blanket is in final position as necessary to assure a snug fit.

6.2.3.5 Notify Quality Control for final inspection.

6.3 Three Sided Wrap Installation
(Refer to Typical Design Drawings B-495 and B-496)

A three sided or similar installation is required in the event that the conduit or a junction box is installed in close proximity to a wall or floor preventing installation of a wrap surrounding the conduits.

This type of installation requires attachment to concrete surface utilizing site approved anchoring devices as outlined herein. If anchors are installed by others, notify Quality Control for inspection per 6.3.3 prior to proceeding with blanket installation.

6.3.1 Install site approved concrete anchors (minimum 1/4" diameter recommended) on maximum twelve (12") inch centers. Distance from sides of conduit or junction boxes to be determined by Engineering.

Factors to consider are: 1) blanket size, 2) surface characteristics of concrete, 3) number and type of interferences.

6.3.2 Anchors should be pre-set before blankets are impaled onto studs.

ISSUE DESIGNATION IN THIS COLI INDICATES CURRENT CHANGE

ISSUE DESIGNATION IN THIS COLI ...NDICATES CURRENT CHANGE

6.3.3 Notify Quality Control for inspection before proceeding.

6.3.4 Place inner blanket around conduit or junction box and impale on studs going from side to side to assure proper alignment. Maintain a one (1") inch nominal thickness of inner blanket.

6.3.5 Duct tape may be utilized to keep joints flush and to hold blanket(s) in position.

6.3.6 Edge of inner blanket shall extend a minimum of two (2") inches from center of studs.

6.3.7 Notify Quality Control for inspection before proceeding.

6.3.8 Install stainless steel foil barrier over inner blanket providing a MINIMUM six (6") inch overlap on all joints. In cases where six (6") inch overlap cannot be achieved due to sharp curvatures install foil strips with a minimum two (2") inch overlap.

6.3.9 Impale foil over studs allowing for the two (2") inch minimum requirements.

6.3.10 Duct tape may be utilized to hold foil firmly in place. Aluminum foil tape may be utilized if gaps are excessive.

6.3.11 Notify Quality Control for inspection before proceeding.

6.3.12 Install outer blanket over foil barrier and impale over studs. Edge of outer blanket shall extend a minimum of two (2") inches over studs. Maintain a two and one-half (2-1/2") inch nominal thickness of outer blanket.

6.3.13 Install fender washers and/or B72 strut and/or flat bar retainer strap over studs assuring that blanket assemblies are not wrinkled or bunched.

6.3.14 Install appropriate sized locknuts (or double nuts) and securely tighten. Do not over-tighten. Depression of blanket shall not exceed three-fourths (3/4") inch.

6.3.15 Connect adjacent blankets or edges of a prefabricated blanket together with 16 gauge stainless steel tie wire between each corresponding lacing hook.

NOTE: An additional tie wire may be used after blanket is in final position as necessary to assure a snug fit.

6.3.16 Recheck final positioning and tighten securely. Exercise caution to prevent damage to blanket assemblies.

6.3.17 Notify Quality Control for final inspection.

6.4 Field Modifications and Repairs

6.4.1 Should an opening in the Wrap System exist due to installation conditions, fill with appropriate inner blanket, alumina silica blanket/fiber, foil barrier and/or outer blanket materials. Engineering to determine size of such small assemblies required.

ISSUE DESIGNATION IN THIS COL INDICATES CURRENT CHANGE

If hog rings are to be used to close blanket assembly, rings are to be installed on one (1") inch MAXIMUM centers. Q-24 Quartz Thread may be used in lieu of hog rings for inner and/or outer blanket.

Site craft installers to fabricate under supervision of Engineering. Quality Control to provide inspection of such fabrication and/or installation.

6.4.2 Non-electrical interferences (piping, hangers, supports, etc.) shall be protected with a nominal four (4") inch thickness of alumina silica blanket. The outer layer of alumina silica blanket shall be enveloped with an approved outer fabric. Wrap for a minimum distance of eighteen (18") inches or for full length of interference if less than eighteen (18") inches as shown on Figure 3, page 11 of this procedure. Install a sufficient number of lacing hooks and tie wire to close longitudinal seam and to secure wrap to primary system.

6.4.3 When a protected conduit is in close proximity to an electrical cable tray, the interfering portion of the tray shall be included within the conduit wrap system.

Insert alumina silica blanket/fiber around cables for a minimum distance of eighteen (18") inches from each side of the protected conduit as shown on Figure 4, page 12 of this procedure.

6.4.4 Craft installers shall repair damaged blanket assemblies under supervision of Engineering. Only acceptable materials shall be utilized.

6.4.4.1 Patches of proper fabric type shall be cut to a size sufficient to cover a tear or hole overlapping a minimum of two (2") inches onto undamaged fabric. Patches shall have a finished edge on all sides. Install as shown on Figure 5, page 13 of this procedure.

NOTE: Small tears not exceeding two (2") inches in length can be loop stitched with Q-24 thread at maximum spacing of one-half (1/2") inch. Holes or tears in fiberglass cloth and outer fabric not exceeding one (1") inch shall not require repair.

6.4.4.2 If inner alumina silica blanket material is damaged or has a void, add additional material as necessary.

6.4.4.3 Engineering concurrence shall be obtained for any repair activities. Upon completion, notify Quality Control for inspection.

6.4.5 Additional lacing hooks may be added as needed in conjunction with original installation or modification.

6.5 Cable Drop Installation

6.5.1 Installation of Inner Blanket Assemblies
(Refer to first step as shown in Figure 6)

6.5.1.1 Bundle cables into as nearly a round configuration as feasible. Duct tape or cable tie wraps may be used to maintain this configuration.

ISSUE DESIGNATION IN THIS COLI ...DICATES CURRENT CHANGE

6.5.1.2 Install first inner blanket around cable bundle assuring that shiplap joint is as tight as possible. Maximum allowable gap is one-half (1/2") inch.

6.5.1.3 Duct tape may be utilized to hold blanket firmly in place (duct tape may be applied completely around blanket to provide tape to tape adhesion).

6.5.1.4 Install subsequent blankets (if required) per 6.5.1.2 assuring the lengthwise shiplap joints are as tight as possible.

6.5.1.5 Duct tape per 6.5.1.3.

6.5.1.6 Notify Quality Control for inspection prior to proceeding.

6.5.2 Installation of Stainless Steel Foil Barrier
(Refer to second step as shown in Figure 6)

6.5.2.1 Install foil strips length wise around the cable bundle providing a minimum six (6") inch overlap on ends and edges.

6.5.2.2 Duct tape may be utilized to hold foil strips firmly in place. Duct tape and/or aluminum foil tape may be used at the edges of the strips if gaps appear excessive due to curvature of the cable drop bundle.

6.5.2.3 Notify Quality Control for inspection prior to proceeding.

6.5.3 Installation of Outer Blanket Assemblies
(Refer to third step as shown on Figure 7)

6.5.3.1 Install first outer blanket around conduit assuring that the shiplap joint is as tight as possible. Maximum allowable gap is one-half (1/2") inch.

6.5.3.2 Connect ends by fastening 16 gauge stainless steel tie wire between each corresponding lacing hook. Recheck final positioning and tighten securely exercising caution to prevent blanket damage.

NOTE: An additional tie wire may be used after blanket is in final position as necessary to assure a snug fit.

6.5.3.3 Install subsequent blankets per 6.2.3.1 and 6.2.3.2 assuring that lengthwise shiplap joints are properly aligned.

6.5.3.4 Connect adjoining blankets at circumferential shiplap joints by fastening 16 gauge stainless steel tie wire between each corresponding lacing hook.

NOTE: An additional tie wire may be used after blanket is in final position as necessary to assure a snug fit.

6.5.3.5 Notify Quality Control for final inspection.

6.6 Alternate method for installing outer blanket assemblies.

ISSUE DESIGNATION IN THIS COLL ..DICATES CURRENT CHANGE

6.6.1 Wrap tube assembly around foil barrier assuring that ends abut with no apparent gaps. Install approved tape completely around assembly with tape-to tape adhesion at sufficient spacing to assure no gaps at longitudinal joint.

6.6.2 Install subsequent tube assemblies per 6.6.1 assuring that circumferential joints firmly abut with no apparent gaps and that longitudinal joints are properly aligned. Apply duct tape lengthwise across each circumferential joint to hold in place.

6.6.3 Notify Quality Control for inspection prior to proceeding.

6.6.4 Install alumina silica blanket around tube assembly assuring that ends abut with no apparent gaps. Stagger longitudinal and circumferential joints a minimum six (6") inches from respective tube assembly joints.

6.6.5 Connect longitudinal joints by fastening 16 gauge stainless steel tie wires between each adjacent lacing hook.

NOTE: An additional tie wire may be used after blanket is in final position as necessary to assure a snug fit.

6.6.6 Notify Quality Control for inspection after each blanket is installed.

6.6.7 Install subsequent blankets as noted above. Stagger circumferential joints a minimum six (6") inches from tube assembly joints.

6.6.8 Connect adjoining blankets by fastening 16 gauge stainless steel tie wire between each adjacent lacing hook at circumferential joints assuring tight fit with no apparent gaps.

NOTE: An additional tie wire may be used after blanket is in final position as necessary to assure a snug fit.

6.7 Raceway Identification Tags

6.7.1 Upon completion of Wrap System installation, raceway identification (as furnished by client) shall be affixed on both ends with stainless steel tie wire as follows:

6.7.1.1 If conduit funs five (5') feet or longer, affix tags at all entrance and exit points (walls, floors) and at the origin and destination points (cable tray, junction box, etc.).

6.7.1.2 If conduit run is less than five (5') feet, affix one tag at a central location or at the most visible location of the conduit. Conduits shall be identified at intervals not greater than fifteen (15') feet.

7.0 ATTACHMENTS

None

ISSUE DESIGNATION IN THIS COLUMN INDICATES CURRENT CHANGE

FIRST STEP

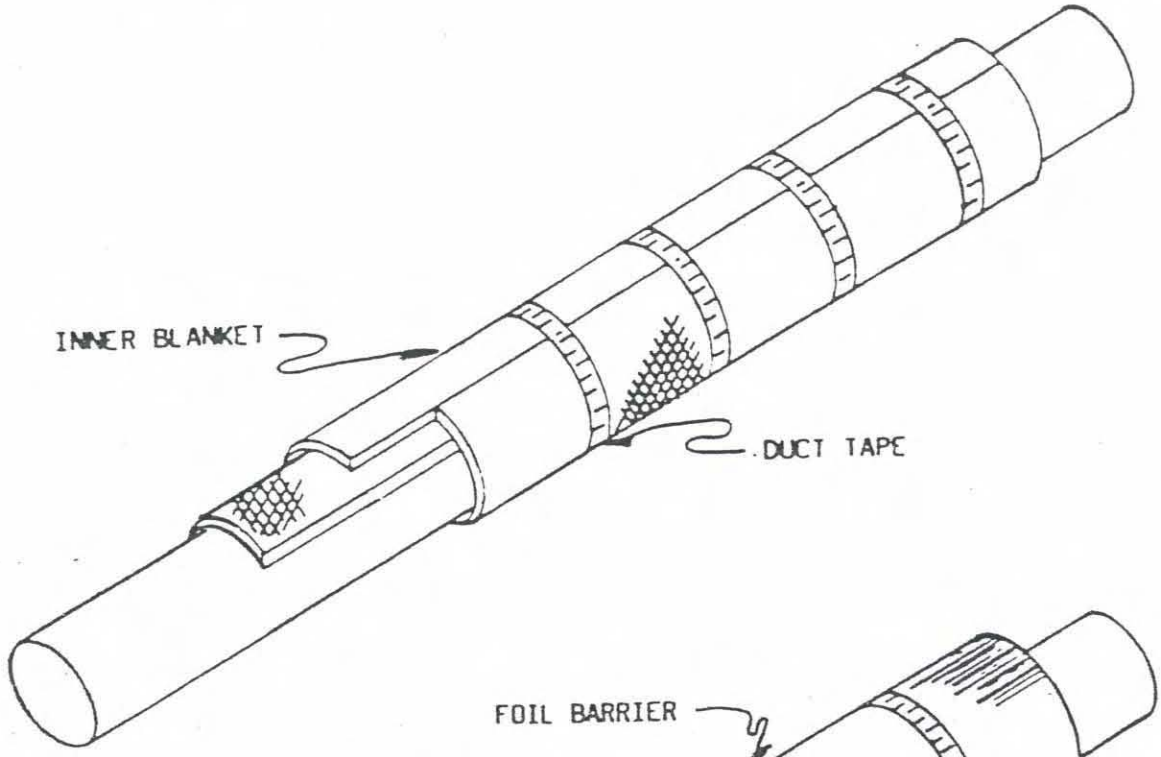

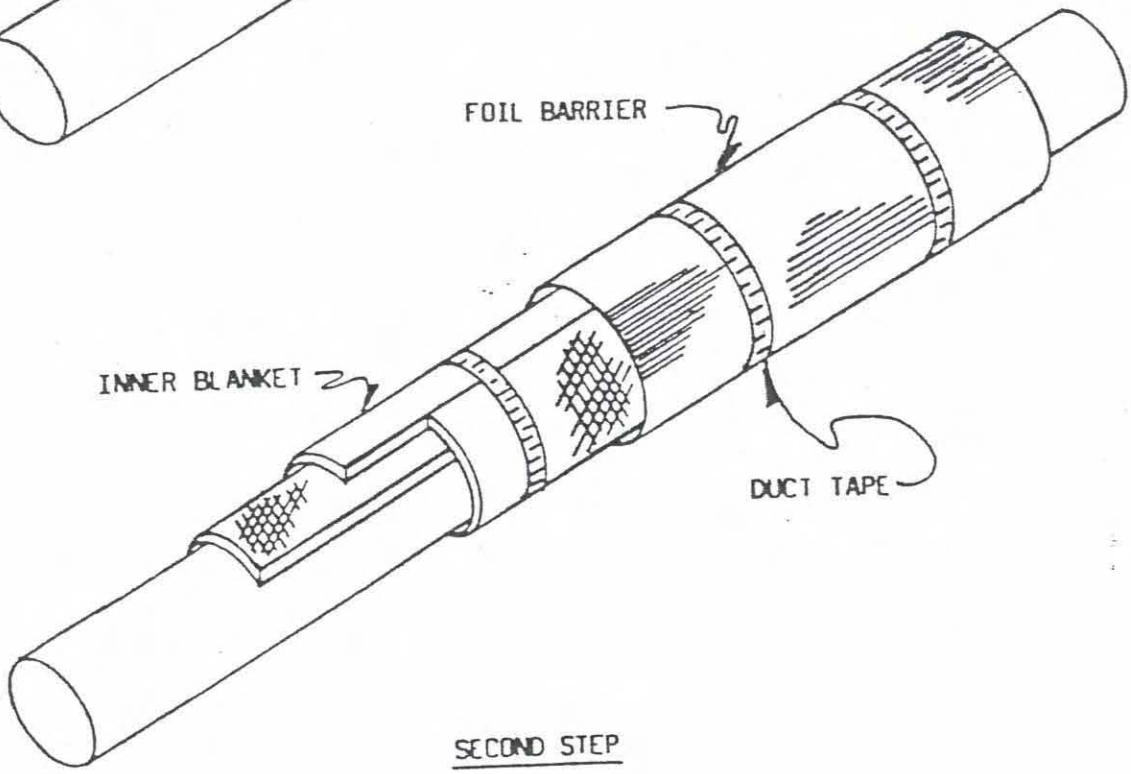

SECOND STEP

FIGURE - 1

ISSUE DESIGNATION IN THIS COL . INDICATES CURRENT CHANGE

THIRD STEP

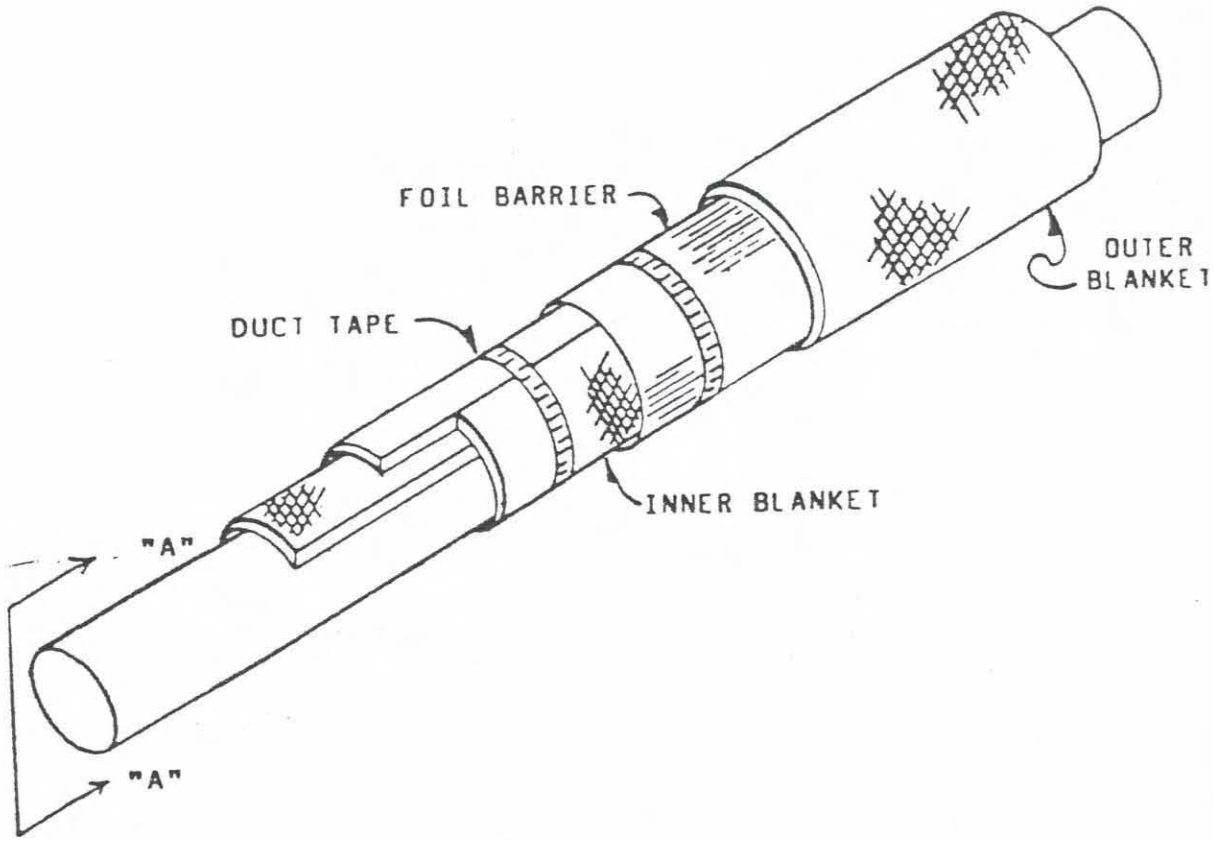

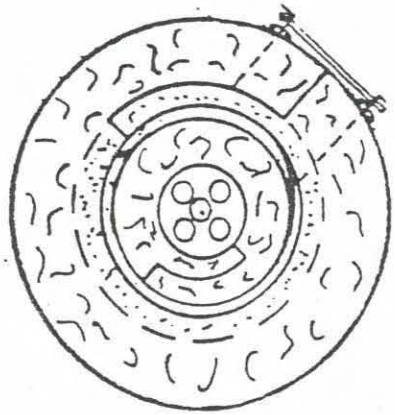

SECTION "A"-"A"

FIGURE - 2

ISSUE DESIGNATION IN THIS COLL .NDICATES CURRENT CHANGE

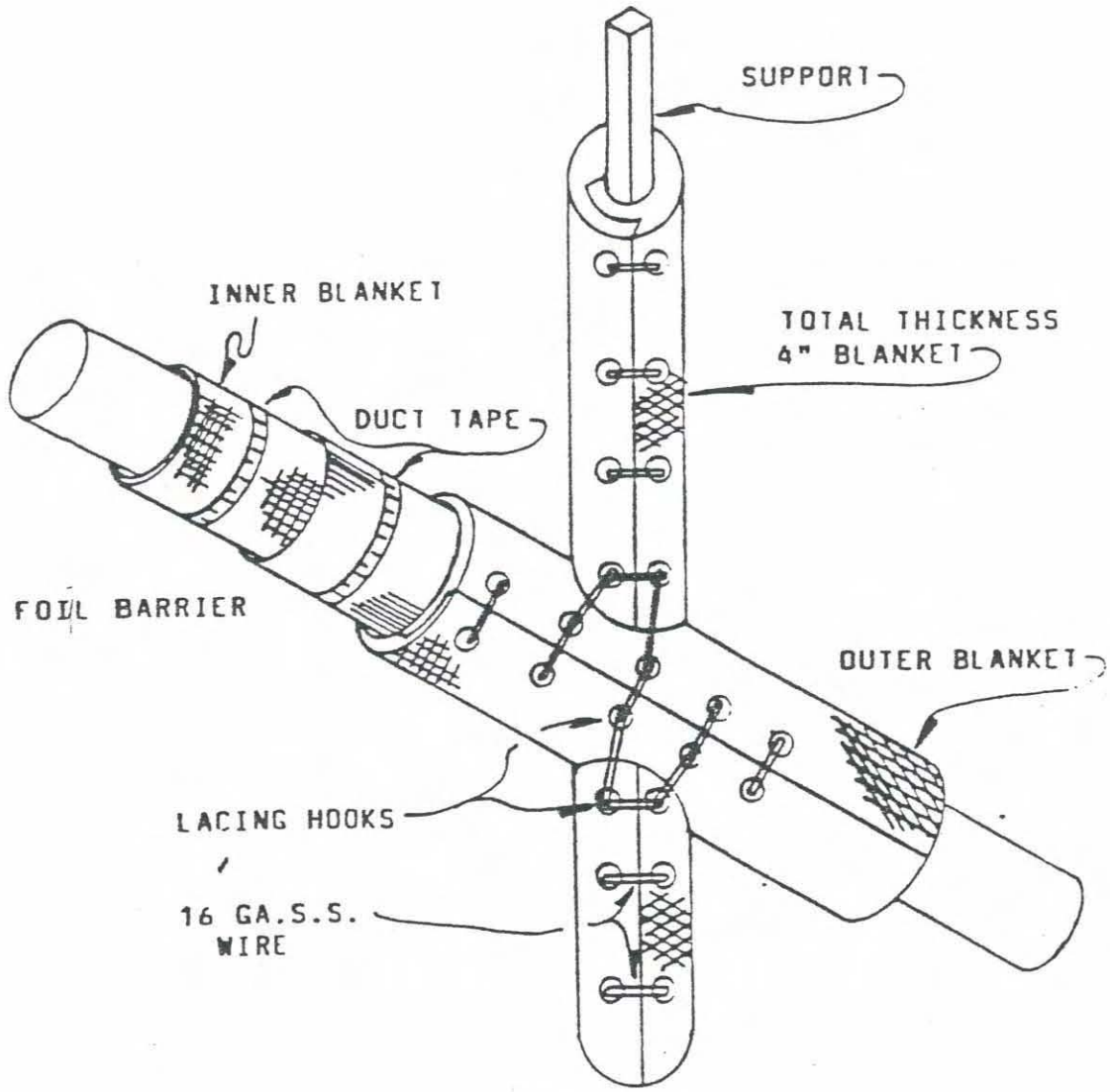

FIGURE - 3

ISSUE DESIGNATION IN THIS COL ..NDICATES CURRENT CHANGE

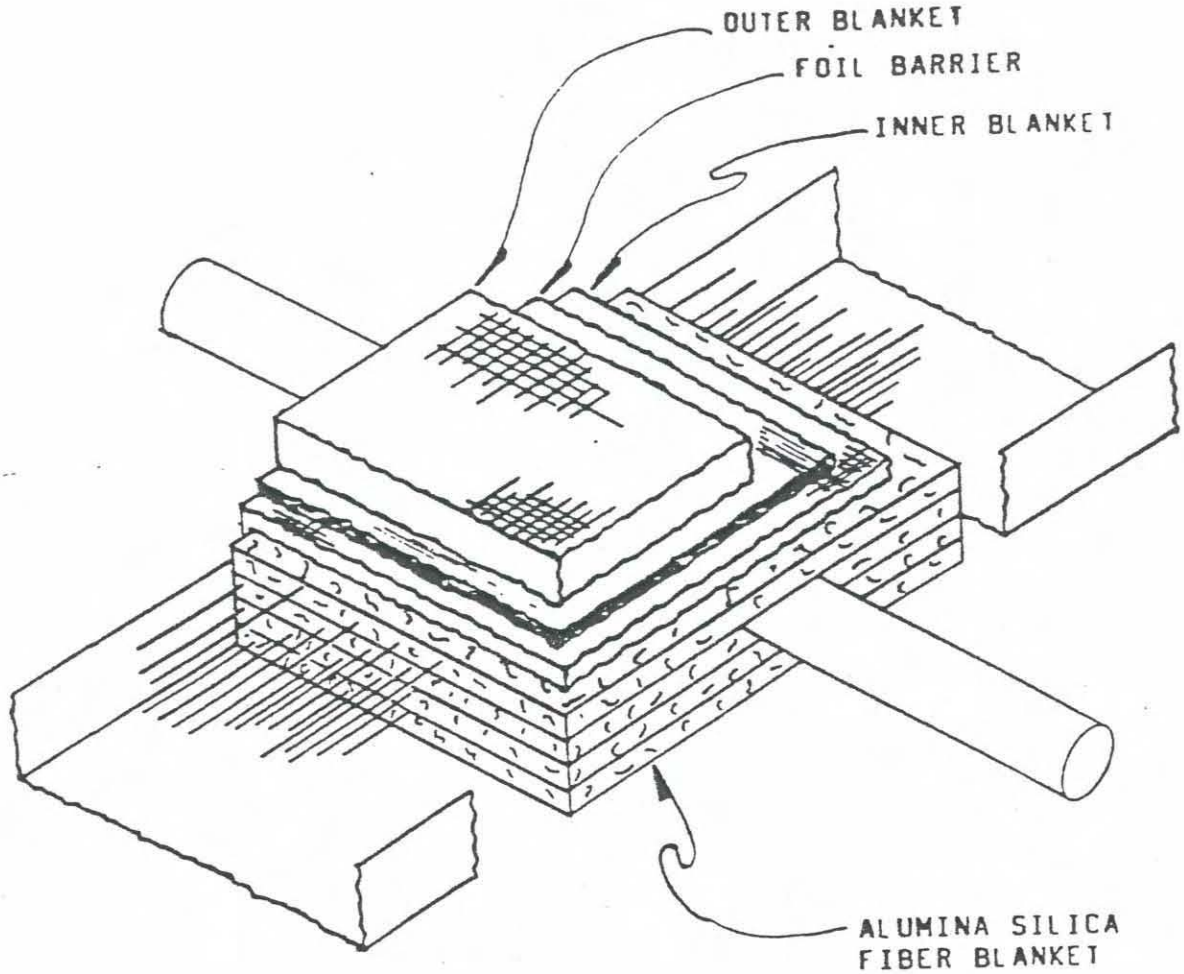

FIGURE - 4

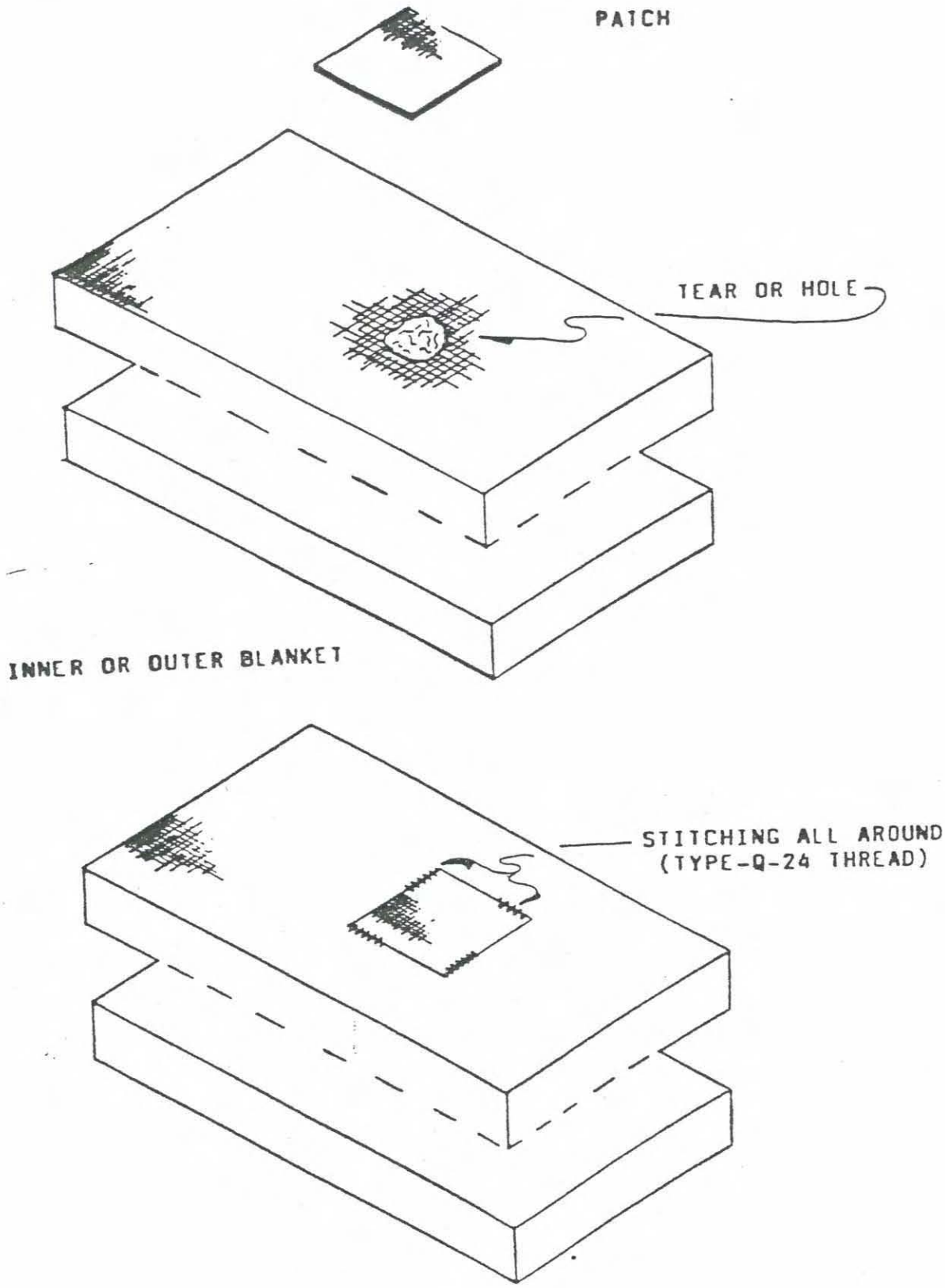

FIGURE - 5

ISSUE DESIGNATION IN THIS COL' .DICATES CURRENT CHANGE

ISSUE DESIGNATION IN THIS COLUMN INDICATES CURRENT CHANGE

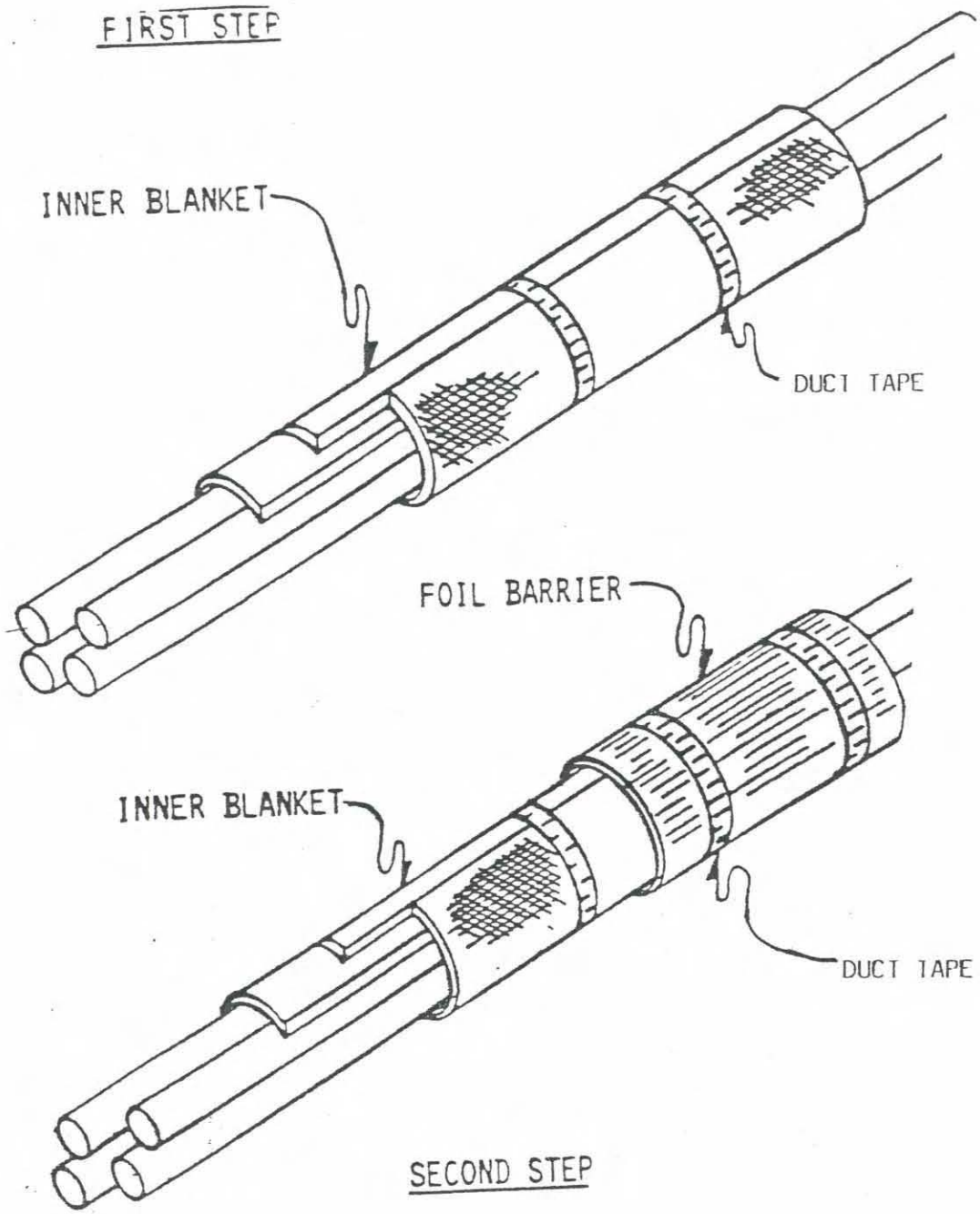

FIGURE 6

ISSUE DESIGNATION IN THIS COL INDICATES CURRENT CHANGE

THIRD STEP

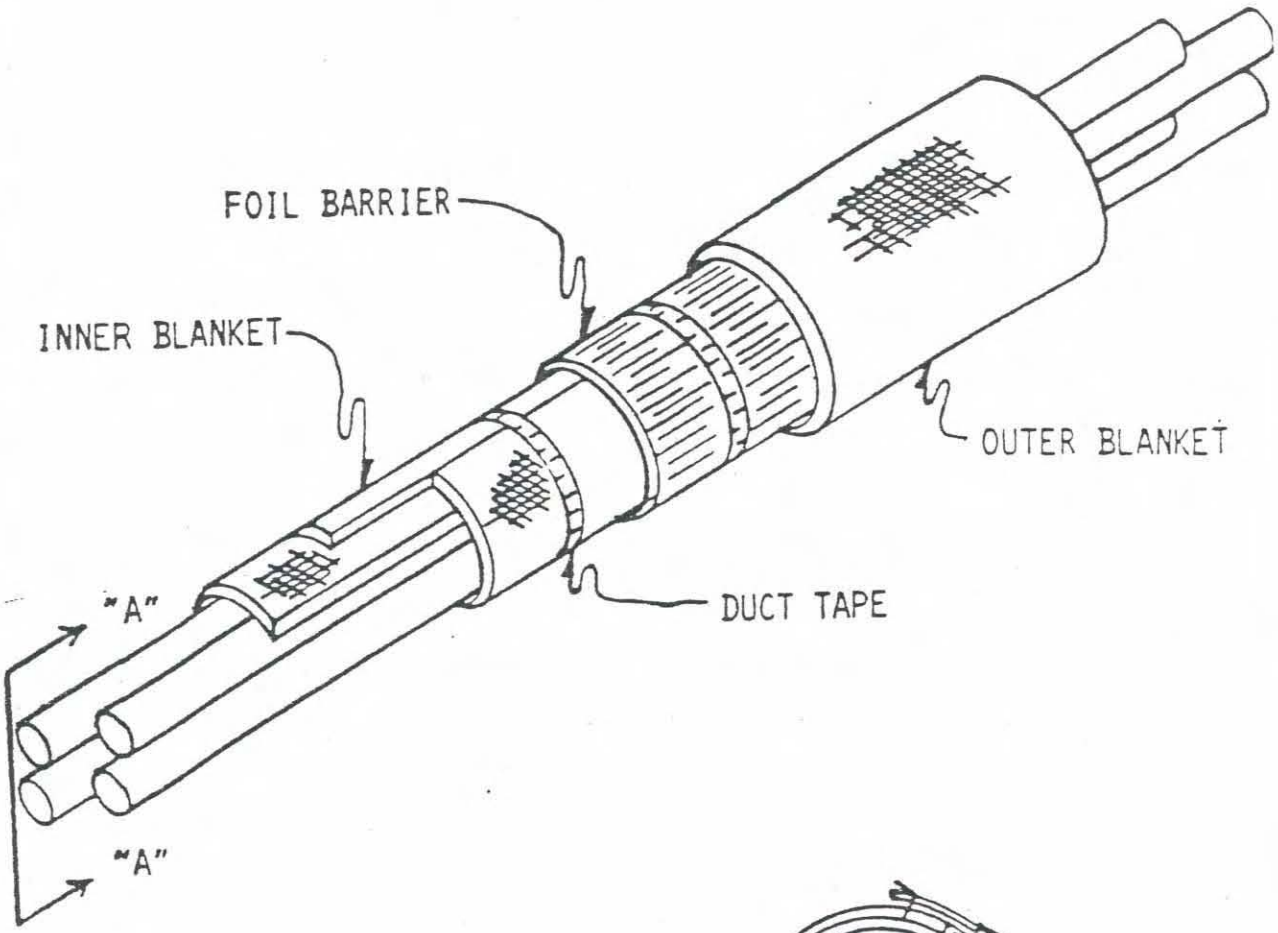

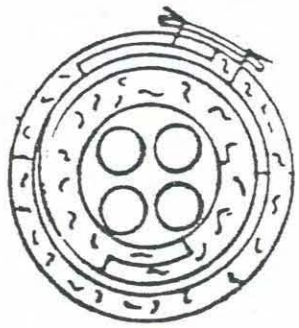

SECTION "A" - "A"

FIGURE 7

ISSUE DESIGNATION IN THIS COLUMN INDICATES CURRENT CHANGE

FABRICATION INSPECTION FOR HEMYC PROTECTIVE WRAP COMPONENTS

1.0 PURPOSE

The purpose of this procedure is to assure that the manufacture of the HEMYC Protective Wrap Components is consistent with the system as tested on the various qualification tests. The Fire Qualification Test, referenced as CTP-1026, consisted of a one (1) hour fire exposure, per ASTM E-119 criteria including hose stream test in accordance with the ANI Information Bulletin No. 5(79) entitled, "ANI/MAERP Standard Fire Endurance Test Method to Qualify a Protective Envelope for Class IE Electrical Circuits".

2.0 SCOPE

This procedure provides the methods and guidelines for the inspection and verification activities performed to ascertain the manufacture and/or fabrication of the protective wrap components is within acceptable standards.

3.0 REFERENCES

3.1 IP-8400.105, Fabrication of HEMYC Cable Protection System Components

3.2 CTP-1026, HEMYC Fire Qualification Test

3.3 American Nuclear Insurers Acceptance dated 08/02/82

4.0 DEFINITIONS

Refer to Quality Assurance/Quality Control terms and definitions contained in the back of the PROMATEC Quality Assurance Program.

5.0 RESPONSIBILITIES

B 5.1 When fabrication is performed at jobsite, the Installer's QUALITY CONTROL PERSONNEL, as trained and certified by PROMATEC, shall be responsible for appropriate inspection, documentation and monitoring activities.

B When fabrication is performed at a separate manufacturing facility, the facility's INSPECTOR shall be responsible for the performance of these activities.

B 5.2 The DOCUMENT CONTROL COORDINATOR shall be responsible to implement and maintain an adequate filing system of the documentation provided by jobsites or as provided from the manufacturing facility Inspector.

ISSUE DESIGNATION IN THIS COLUMN INDICATES CURRENT CHANGE

6.0 PROCEDURE

B The assigned Quality Control Inspector shall perform the verification activities herein prescribed. The Fabrication Inspection Register (QC-61) shall be completed as defined in Item 7.1 of this procedure.

6.1 HOLD POINT ONE

6.1.1 All materials utilized in the construction of the specific order shall have been previously accepted as outlined in QCP-0008. This includes the verification that applicable certification documents were received with shipment or are available at PROMATEC.

6.1.2 If certification documents are not available with the material, an Inspection Report (Form QC-20) shall be instrumented as outlined in QCP-0019. PROMATEC Quality Assurance may elect to authorize use of the subject material after verification from manufacturer that required certification documents are either in transit or have been reviewed and accepted by PROMATEC.

6.1.3 Only approved materials as listed below shall be utilized in the fabrication of HEMYC Cable Protection System Components.

ACCEPTABLE MATERIALS

a. External Fabric

1. SILTEMP WR84CSR Water Repellent, Thermal Barrier Cloth .030 nom. thickness, 18oz/yd(2).

2. Or Approved equal.

b. Internal Fabric

1. Klever 600/6 or J.P. Stevens #332 Fiberglass Cloth, 49" width, 13oz/yd(2).

2. Or Approved equal.

(Internal Fabric may be used on the non-fire side of protection blanket as necessary. If used, external fabric must overlap a minimum of six (6") inches on to non-fire side.)

c. Internal Filler

1. Johns-Manville Cerablanket; 6 or 8 lb density; 1.5 and/or 2.0 inch thickness.

Or

2. Babcock & Wilcox Ceramic Fiber blanket; 6 or 8 lb density; 1.5 and/or 2.0 inch thickness.

Or

3. Approved equal.

d. Thread

1. Astroquartz Sewing Thread Type Q-24 Teflon coated approximately .020" diameter; Breaking strength - 20lbs.

Or

2. Alphaquartz Sewing Thread Type Q-24 Teflon coated approximately .020" diameter; Breaking strength - 20lbs.

Or

3. Approved equal.

6.2 HOLD POINT TWO

Refer to IP-8400.105 for specific fabrication requirements.

In Process Inspection

6.2.1 The assigned Quality Control Inspector shall periodically inspect on a random basis, compliance to the manufacture of Protective Wrap Components as outlined in Items 6.3.1, 6.3.2 and 6.3.3 of IP-8400.105.

As a minimum requirement, all wrap assemblies constructed shall be 100% Quality Control inspected the first week of fabrication, and a minimum of one day's production per week thereafter.

6.2.2 Verification that each wrap assembly is properly identified and marked as specified in Item 6.5 of IP-8400.105 shall be performed.

B 6.2.3 Verification that the Traceability ID Register (QC-60) is accurately completed for each wrap assembly as defined in Item 7.3 of this procedure.

6.3 HOLD POINT THREE

6.3.1 Each wrap component (blanket) shall be physically inspected by the assigned Quality Control Inspector prior to final acceptance from fabricator. This inspection shall verify conformance to the finished dimension requirements as specified on the applicable fabrication order.

7.0 ATTACHMENTS

7.1 Instructions for the completion of Form QC-61, Fabrication Inspection Register

7.2 Form QC-61

7.3 Instructions for the completion of Form QC-60, Traceability ID Register

7.4 Form QC-60

ISSUE DESIGNATION IN THIS COLUMN INDICATES CURRENT CHANGE

QCP-10002
ATTACHMENT 7.1

INSTRUCTIONS FOR COMPLETION OF FABRICATION INSPECTION REGISTER (FORM QC-61)

1. REPORT NUMBER - This is a two part number utilizing the numerical portion of the Project Number and the numerical sequence of the individual sequence of the individual report sheet, i.e., 274/03. This defines the third QC-61 used on Project No. FS-274.

2. PROJECT NAME - Name of Project or Plant.

3. PROJECT NUMBER - The PROMATEC Job Number (i.e., 0027-CM).

4. FABRICATOR - The name of the company fabricating blanket.

5. BLANKET NUMBER/ BLANKET FAB ORDER NO. - Identification of assigned blanket number per blanket fab order (Form QC-59).

6. QC-60 NUMBER - Number of the QC-60, Traceability ID Register for reference of traceability.

QC HOLD POINT ONE - MATERIAL RECEIVING

7. ACCEPT/REJECT Insert appropriate check mark upon verification that only accepted materials as prescribed in QCP-10002 are utilized.

8. BY - Initials of the assigned Quality Control Representative performing this inspection.

9. DATE - Date of performance of this inspection.

QC HOLD POINT TWO - IN PROCESS INSPECTION

The assigned Quality Control Inspector shall periodically spot check on a random basis, compliance to the fabrication of Protective Wrap Components as outlined in IP-8400.105.

As a minimum requirement, all wrap assemblies constructed shall be 100% Q.C. inspected the first scheduled week of fabrication, and a minimum of one day's production per week thereafter.

When this inspection is performed, Items 12 and 13 (below) shall be completed.

10. ACCEPT/REJECT -

(a.) External and Internal fabrics are cut to proper dimensions, as determined by fabricator to assure proper finished dimensions as specified on the applicable fabrication order (Form QC-59).

(b.) Stitching is performed per IP-8400.105, Item 6.3.1.

(c.) Filler material is proper size to assure proper finished dimension per IP-8400.105, Item 6.3.2.

(d.) Fabric at open end of envelope is rolled under and double stitched per IP-8400.105, Item 6.3.3.

(e.) Longitudinal stitching performed per IP-8400.105, Item 6.3.4.

(f.) Identification markings are performed per IP-8400.105, Item 6.5.

11. BY - Initials of inspector performing documentation.

12. DATE - Date of documentation of QC HOLD POINT TWO

QC HOLD POINT THREE & FINAL ACCEPTANCE

13. ACCEPT/REJECT - Insert appropriate check mark upon acceptance or rejection of Completed Wrap Assembly.

14. BY - Initials of inspector performing inspection.

15. DATE - Date of Final Acceptance of Completed Wrap Assembly.

PROMATEC

PROGRESSIVE MATERIALS AND TECHNOLOGIES, INC.

FABRICATION INSPECTION REGISTER

REPORT NUMBER 1

PROJECT NAME 2

PROJECT NUMBER 3

FABRICATOR 4

MT BARRIER WRAP	FORM	HOLD POINT ONE				HOLD POINT TWO				HOLD POINT THREE			
COMPONENT / BLANKET	QC-60	MATERIAL INSPECTION				FABRICATION INSPECTION				FINAL INSPECTION			
IDENTIFICATION NUMBER	NUMBER	REJECT	ACCEPT	BY	DATE	REJECT	ACCEPT	BY	DATE	REJECT	ACCEPT	BY	DATE
5	6	7		8	9	10		11	12	13		14	15

QCP-10002
B ISSUE

ATTACHMENT 7.2

QCP-10002
ATTACHMENT 7.3

INSTRUCTIONS FOR COMPLETION OF TRACEABILITY ID REGISTER (FORM QC-60)

1.	REPORT NUMBER -	This is a two part number utilizing the numerical portion of the Project Number and the numerical sequence of the individual sequence of the individual report sheet, i.e., 274/02. This defines the second QC-60 used on Project No. FS-274.
2.	PROJECT NAME -	Name of Project or Plant.
3.	PROJECT NUMBER -	The PROMATEC Job Number (i.e., 0027-CM).
4.	FABRICATOR -	The name of the company fabricating blanket.
5.	BLANKET NUMBER/ BLANKET FAB ORDER NO. -	Identification of assigned blanket number per blanket fab order (Form QC-59).
6.	EXTERNAL FABRIC -	Name of external fabric manufacturing company, type of fabric, lot number of external fabric and receiving report number.
7.	INTERNAL FABRIC -	Name of internal fabric manufacturing company, type of fabric, lot number of internal fabric and receiving report number.
8 & 9.	FILLER MATERIAL -	Name of filler material manufacturing company, type of material, lot number of filler material and receiving report number.
10.	THREAD -	Name of thread manufacturing company, type of material, lot number of thread and receiving report number.
11.	HARDWARE -	Types of hardware and receiving report numbers.
12.	INSPECTOR -	Initials of inspector performing documentation, and date inspection performed.

PROMATEC

PROGRESSIVE MATERIALS AND TECHNOLOGIES, INC.

TRACEABILITY ID REGISTER

REPORT NUMBER (1)

PROJECT NAME (2)

PROJECT NUMBER (3)

FABRICATOR (4)

MT BARRIER WRAP	EXTERNAL FABRIC		INTERNAL FABRIC		FILLER MATERIAL		FILLER MATERIAL		THREAD		HARDWARE		INSPECTOR
MFG													
TYPE													
IDENTIFICATION NO.	I.D. NO.	R.R.#	I.D. NO.	R.R.#	I.D. NO.	R.R.#	I.D. NO.	R.R.#	I.D. NO.	R.R.#	R.R.#	R.R.#	BY / DATE
(5)	(6)		(7)		(8)		(9)		(10)		(11)		(12)

QCP-10002
ISSUE B

ATTACHMENT 7.4

ISSUE DESIGNATION IN THIS COLL INDICATES CURRENT CHANGE

INSTALLATION INSPECTION OF CRITERIA FOR HEMYC PROTECTIVE WRAP COMPONENTS

1.0 PURPOSE

The purpose of this procedure is to assure that the installation of the HEMYC Protective Wrap System components is inspected to verify consistency with the system as tested on the various qualification tests. The Fire Qualification Test, referenced as CTP-1026, consisted of a One (1) Hour Fire Exposure, per ASTM-119 criteria, including hose stream test in accordance with the American Nuclear Insurers Information Bulletin No. 5(79) entitled, "ANI/MAERP Standard Fire Endurance Test Method to Qualify a Protective Envelope for Class IE Electrical Circuits."

2.0 SCOPE

This procedure provides the inspection criteria to enable the assigned Quality Control Inspector to perform adequate verification of compliance to quality requirements for the fabrication of HEMYC Protective Wrap System components.

3.0 REFERENCES

3.1 10CFR50, Appendix R

3.2 ANI Bulletin No. 5(79)

3.3 CTP-1026, HEMYC Fire Qualification Test

3.4 ANI Acceptance dated 08/02/82

3.5 IP-8400.101, Installation of HEMYC Protective Wrap System - Straight Sections

3.6 IP-8400.102, Installation of HEMYC Protective Wrap System - Curved Sections of Cable Tray

3.7 IP-8400.103, Installation of HEMYC Protective Wrap System onto Single or Multiple Conduits

3.8 IP-8400.104, Repair and Installation of the HEMYC Protective Wrap System Around Interferences and Obstructions.

3.9 IP-8400.105, Manufacture of HEMYC Cable Protection System Components

3.10 IP-8400.106, Installation of Firestops and Terminations within the HEMYC Protective Wrap System for Cable Tray(s) and Conduit(s)

3.11 IP-8400.107, Installation of HEMYC Protective Wrap System - Multiple Cable Trays

ISSUE DESIGNATION IN THIS COLUMN INDICATES CURRENT CHANGE

4.0 DEFINITIONS

None

5.0 RESPONSIBILITIES

5.1 The Installer's QUALITY CONTROL PERSONNEL, as trained and certified by PROMATEC, shall be responsible for appropriate inspection, documentation and monitoring activities.

5.2 The DOCUMENT CONTROL COORDINATOR shall be responsible to implement and maintain an adequate filing system of the documentation herein prescribed.

6.0 PROCEDURE

Inspection and acceptance criteria of the framework installation for cable tray and conduit assemblies. The assigned Quality Control Inspector shall inspect the installed framework for compliance to requirements established in the applicable PROMATEC procedures and as defined herein.

6.1 QUALITY CONTROL HOLD POINT NO. ONE

6.1.1 Verify that clamping devices are adequate for the specific type and size of cable tray.

6.1.2 Clamps must be used in sets. All clamps in a single set must be either all locking type or all friction type. NO INTERMIXING of types in a single set is acceptable (Refer to Figure 1 and 2).

6.1.3 Locking type clamps must be utilized at least every seventh clamp set.

6.1.4 Clamp sets are located on approximate eighteen (18") inch centers.

6.1.5 Locknuts shall be securely tightened to secure frame to cable tray. Locknuts shall only be used once.

6.1.6 Verify that a minimum of two (2") inch Dead Air Space is maintained between side, bottom and top of cable tray and outside of frame on all configurations, unless approved by FCR. (See Figure 3.)

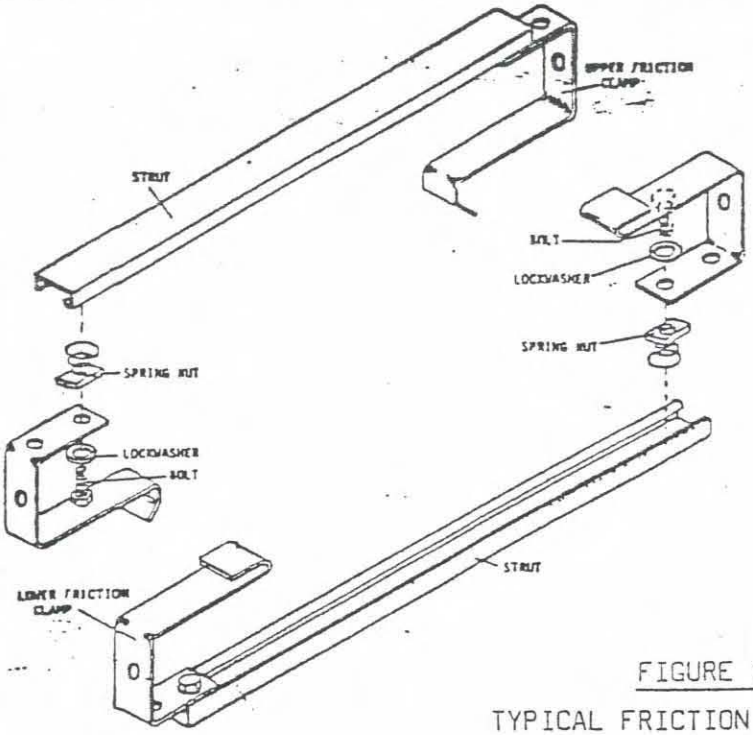

FIGURE 1

TYPICAL FRICTION CLAMP AND
TYPICAL INSTALLATION

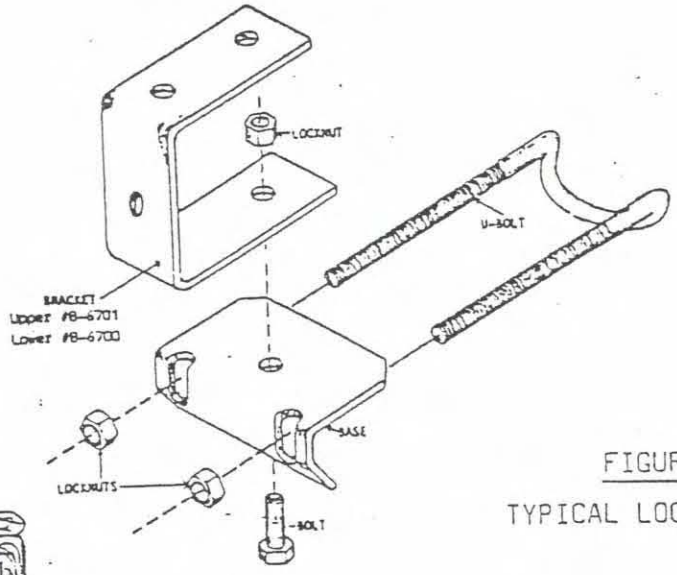

FIGURE 2

TYPICAL LOCKING CLAMP

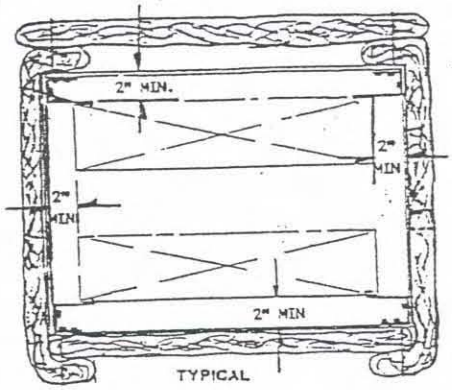

FIGURE 3

2" DEAD AIR SPACE
Single and Multiple Tray Configurations

ISSUE DESIGNATION IN THIS COLU NDICATES CURRENT CHANGE

6.1.7 Verify that top and bottom rails have blanket anchors spaced at a maximum nine (9") inch between centers throughout (Refer to Figure 4).

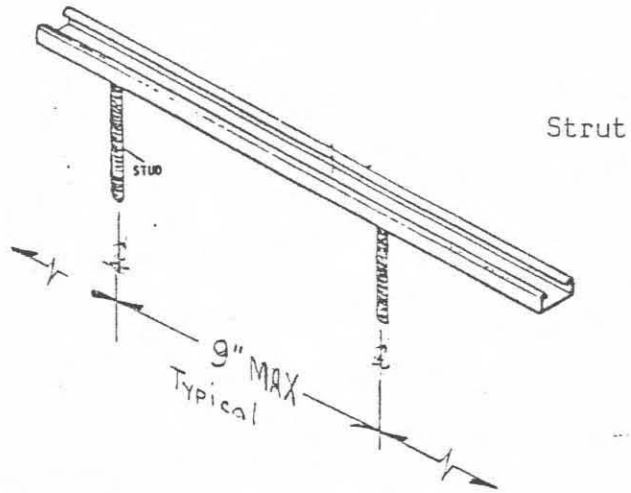

FIGURE 4
BLANKET ANCHOR SPACING

6.1.8 If concrete anchors are utilized to attach blankets to wall, ceiling or floor, they shall be a site-approved type. These anchors shall be spaced on a maximum nine (9") inch between centers throughout.

6.1.9 In the case of direct wrap on conduit, verify that finger strap is firmly attached to conduit per IP-8400.103 (if applicable).

6.1.10 Verify that frame is firmly attached to cable tray and that all nuts are securely tightened.

6.2 QUALITY CONTROL HOLD POINT NO. TWO

Inspection and acceptance criteria for installation of blanket wrap for single and multiple cable trays and conduits.

6.2.1 Assure that blanket to be installed is blanket number assigned for the designated section of cable tray or conduit.

6.2.2 Verify that a minimum of two (2") inches between center of anchors and edges of blanket on overlaps at top, bottom, and side of cable trays is maintained. (See Figure 5.)

6.2.3 Verify that either a eight (8") inch collar is on joints of conduit blanket wrap or that blanket wraps extend over adjoining blanket a minimum of four (4") inches. (See Figure 6.)

ISSUE DESIGNATION IN THIS COLUMN INDICATES CURRENT CHANGE
D

ISSUE DESIGNATION IN THIS COLUMN INDICATES CURRENT CHANGE
D

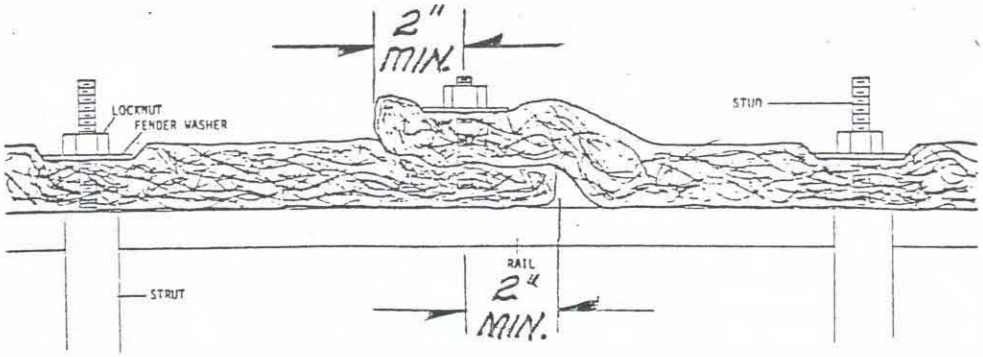

FIGURE 5

TYPICAL OVERLAP

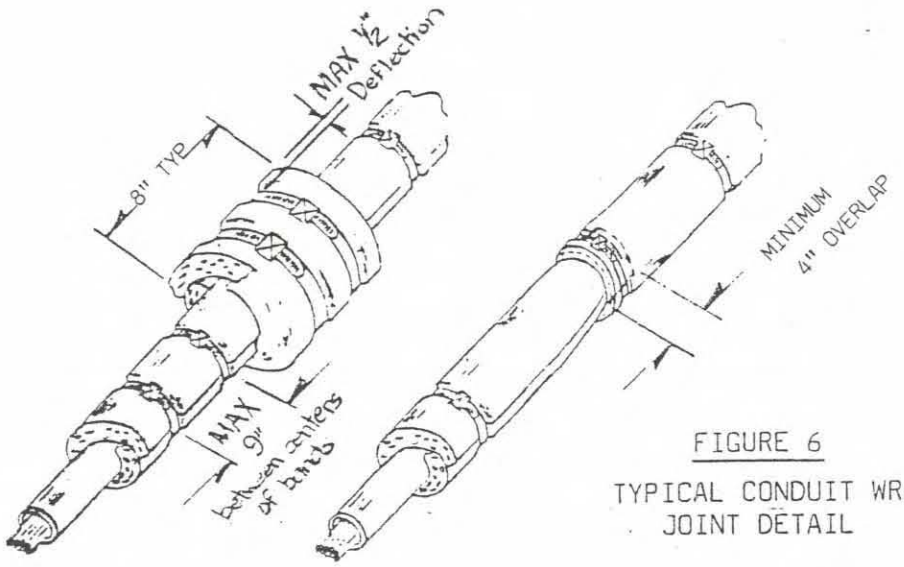

FIGURE 6

TYPICAL CONDUIT WRAP JOINT DETAIL

6.2.4 Verify that either stainless steel strapping or stainless steel band clamps are attached to blanket wrap on a maximum nine (9") inch center on conduit blanket wrap. If single conduit is attached to concrete surface, verify that concrete anchors are of site approved type. These anchors shall be spaced on a maximum of nine (9") inches between centers throughout. (See Figure No. 7.) Banding shall be a minimum gauge of .015 and a minimum width of one-half (1/2") inches.

ISSUE DESIGNATION IN THIS COLUMN INDICATES CURRENT CHANGE

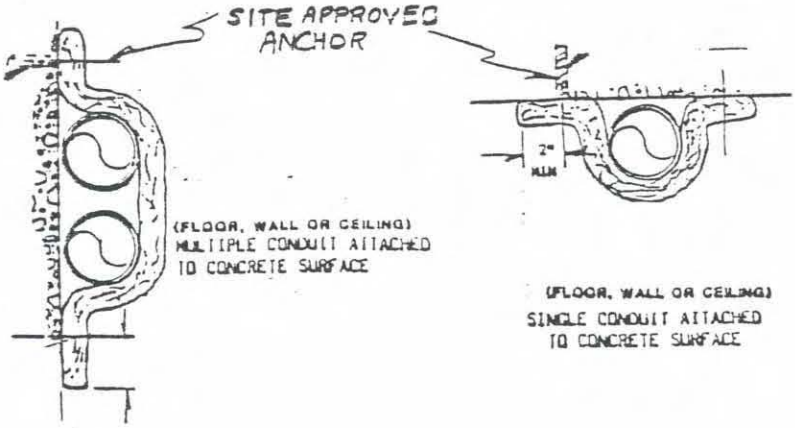

FIGURE 7

CONCRETE ATTACHMENT

6.2.5 Verify that termination of cable tray (floor, ceiling or wall) complies with IP-8400.106, Section 6.2. Check to assure that frame work stops within six (6") inches of surface and ensure that wraps are long enough to extend onto the surface. Wraps shall be attached to surface using the methods outlined in IP-8400.104, Section 6.3 (Refer to Figure 8).

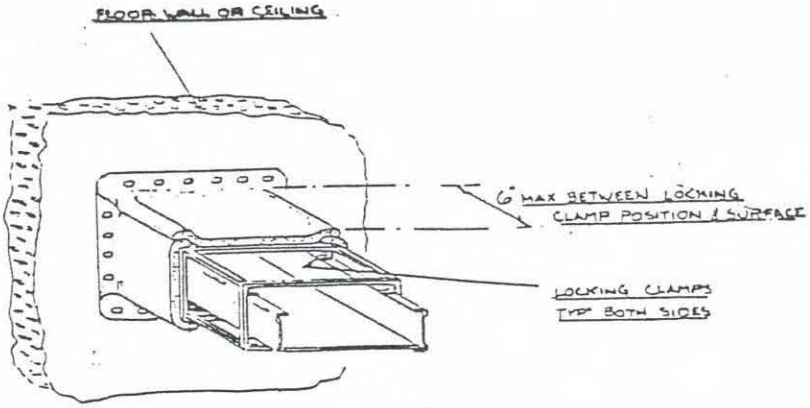

FIGURE 8

TYPICAL TERMINATION OF CABLE TRAY AT WALL, FLOOR OR CEILING

6.2.6 Verify that termination of conduit (floor, ceiling or wall) complies with IP-8400.106, Section 6.3. Assure that flange portion of termination collar is firmly attached onto concrete nuts and lock nuts are firmly tightened and that if gaps exist, they have plumbers tape or equivalent installed as outlined in IP-8400.104, Section 6.3.3 (Refer to Figure 9).

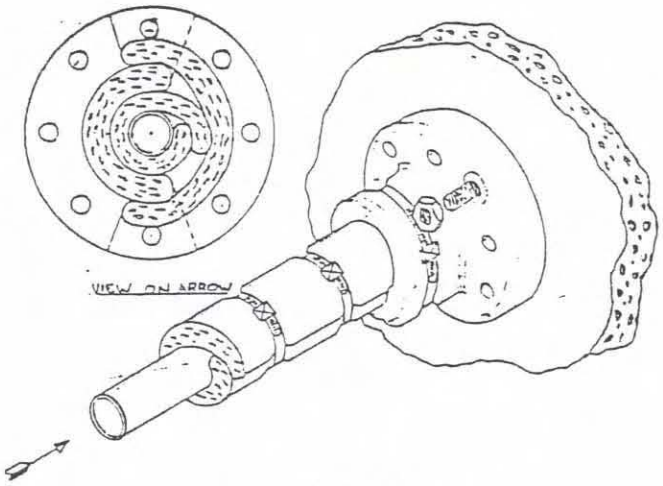

FIGURE 9

TYPICAL TERMINATION OF CONDUIT AT WALL, FLOOR OR CEILING

6.3 If fire stops are required on cable tray that ends with cable protruding, verify that firestops comply with IP-8400.106, Section 6.1.

6.3.1 Assure that a minimum of twelve (12") inch width layer of ceramic blanket is wrapped around bottom, sides and top of cable tray. Tray shall be filled with bulk fiber to that width. Two bands must be applied at four to six (4" - 6") inches apart and compressing both wraps and ceramic fiber filler. (See Figure 10 and 11.)

NOTE: Completed installation shall reflect a good workmanship product with tight folds and secured seams and bands.

ISSUE DESIGNATION IN THIS COLUM. DICATES CURRENT CHANGE

ISSUE DESIGNATION IN THIS COLU NDICATES CURRENT CHANGE

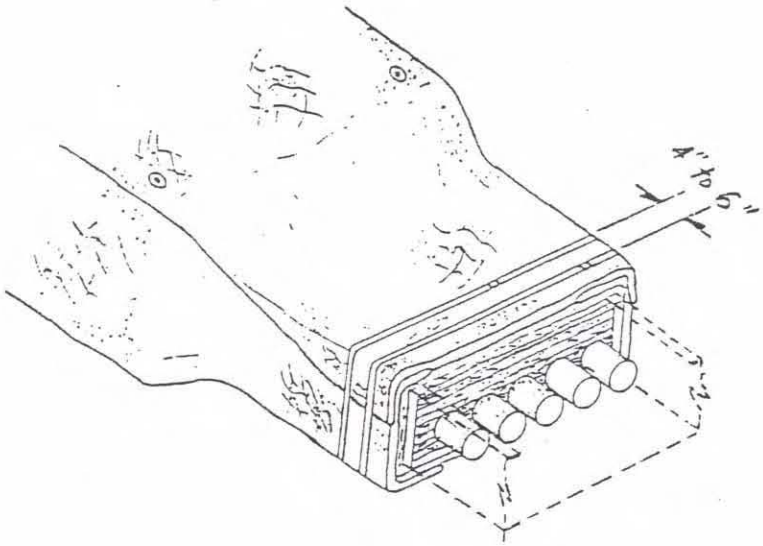

FIGURE 10

TYPICAL TERMINATION OF CABLE TRAY PROTECTIVE SYSTEM
NOT AT WALL, FLOOR OR CEILING (FIRESTOP)

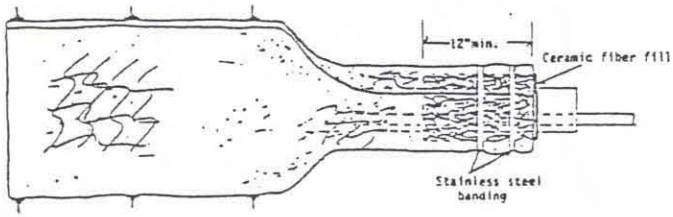

FIGURE 11

TYPICAL TERMINATION SHOWING CERAMIC BLANKET AND
BULK FIBER FILL. (FIRESTOP)

7.0 ATTACHMENTS

D 7.1 PROMATEC Form QC-62 with instructions.

7.2 ADDENDDUM I

HOLD POINT INSPECTION & CLIENT FINAL SIGNOFF REPORT

(QCP-10003)

PROJECT NAME: 2

PROJECT NUMBER: 3

REPORT NO. 1

STRUCTURAL INSPECTION

IDENTIFICATION NUMBER CABLE TRAY/CONDUIT	LOCATION - AREA/ELEVATION/ROOM ETC.	QC HOLD POINTS - STRUCTURAL INTEGRITY						VISUAL INSPECTION & RELEASE			
		1 DEAD AIR SPACE-2"	2 CLAMP DEVICES	3 FRAME SECURE	4 BLANKET ANCHORS	5 CONCRETE ANCHORS	6 OTHER --------	PASS	REJECT	DATE	BY
4	5	6	7	8	9	10	11	12	13	14	15

WRAP INSTALLATION INSPECTION & ACCEPTANCE

BLANKET NO./FAB ORDER NO.									QC HOLD POINTS - WRAP INSTALLATION				QC HOLD POINT 6 & FINAL ACCEPTANCE				
COND.	CABLE TRAY(S)								1 OVERLAPS 4" MIN	2 WRAP RETAINE INTACT	3 BANDING DEFLECT	4 TERMINATION ADEQUATE	VISUAL INSPECTION			FINAL ACCEPTANCE	
	TOP	BOT.	SIDE	SIDE	SIDE	SIDE	SIDE	SIDE					ACCEPT	HOLD	REJECT	DATE	BY
16	17	18	19		21		23		25	26	27	28	29	30	31	32	33

FORM QC-82/REV. 1 07-20-95

QCP-10003
ATTACHMENT 7.1

HOLD POINT INSPECTION
AND
FINAL SIGNOFF REPORT

1.	Report Number -	This is a two part number utilizing the numerical portion of the project number and the numerical sequence of the individual report sheet, i.e., 274/04 (This defines the fourth QC-62 used on Project FS-274).
2.	Project Name -	Name of project or plant.
3.	Project Number -	The PROMATEC assigned job number, i.e., FS-274.
4.	Identification Number Cable Tray/Conduit -	Cable tray identification number and conduit identification number obtained from customer supplied information.
5.	Location/Area/Elevation/ Room/etc. -	Location of Area, Elevation, Room, etc., obtained from customer supplied information.
6.	Dead Air Space - 2" -	Verify that a minimum of two (2") inch Dead Air space is maintained between side, bottom and top of cable tray and outside of frame on all configurations per QCP-10003, page 3, Section 6.1.
7.	Clamp Devices -	Verify that clamps are in sets. Clamps in a single set must be either locking type or all friction type. No intermixing of types in a single set is acceptable per QCP-10003, page 3, Section 6.1.2, Figures 1 & 2. If acceptable, designate with a check mark.
8.	Frame Secure -	Verify that frame is firmly attached to cable tray and that all nuts are securely tightened. If acceptable designate with a check mark.
9.	Blanket Anchors -	Verify that top and bottom rails have blanket anchors spaced on a maximum nine (9") inches between centers throughout, per QCP-10003, page 5, Section 6.1.7, Figure 4.
10.	Concrete Anchors -	Verify that concrete anchors are site approved, maximum spacing of nine (9") inches between centers allowed. If acceptable designate with a check mark.

11.	Other -	Mark N/A. This space is for other Hold Points, as required.
12.	Pass -	If frame is secured to frame, all nuts firmly tightened, and visual inspection verifies that frame work is structurally sound, designate by check mark.
13.	Reject -	If above is rejected designate by check mark.
14.	Date -	Date of visual inspection and release.
15.	By -	Name of inspector performing inspection.

BLANKET NO./FAB ORDER NUMBER FOR CABLE TRAY(S)

16.	Conduit -	Number of conduit assigned by customer supplied information. Refer to Number (4) identification of cable tray or conduit above. If cable tray number, mark N/A.
17.	Top -	Identification of blanket number and fab order number for top section.
18.	Bottom (Bot.) -	Identification of blanket number and fab order number for bottom section.
19 thru 24 (Side) -		Identification of blanket number and fab order number of required side sections. If side sections identification is not required, mark N/A.

QC HOLD POINTS & FINAL ACCEPTANCE

25.	Overlaps -	Overlaps four (4") inches minimum, verify that top, bottom, and side sections overlap each other by at least four (4") inches minimum. If accepted, designate by check mark.
26.	Retainer Intact -	Verify that Retainers are tight and secure, nuts, lock nuts, finger strap clips, etc. If accepted, designate by check mark.
27.	Banding Spacing Deflection -	Verify that the maximum deflection of the banding into the blanket is a maximum of one-half (1/2") inches. If so, designate by check mark.
28.	Termination Adequate -	Verify that the termination of the cable tray (floor, ceiling, or wall) complies with Procedure No. 8400.106, Section 6.2. Verify also that all nuts are securely tightened. If so, designate by a check mark.
29.	Accept Visual Inspection -	Insert check mark upon acceptance of completed blanket assembly.

30.	Hold -	Insert check mark if blanket assembly is incomplete or repairs are needed. Indicate appropriate action on a separate page if necessary.
31.	Reject -	Insert check mark if blanket assembly is rejected. Initiate appropriate action.
32.	Date -	Date inspection was performed.
33.	By -	Name of inspector performing inspection.

ISSUE DESIGNATION IN THIS COLL INDICATES CURRENT CHANGE

ADDENDUM

TO QCP-10003

ROCHESTER GAS & ELECTRIC

SITE SPECIFIC - GINNA STATION

PART A - Figure 6 / Typical Conduit Wrap Joint Detail

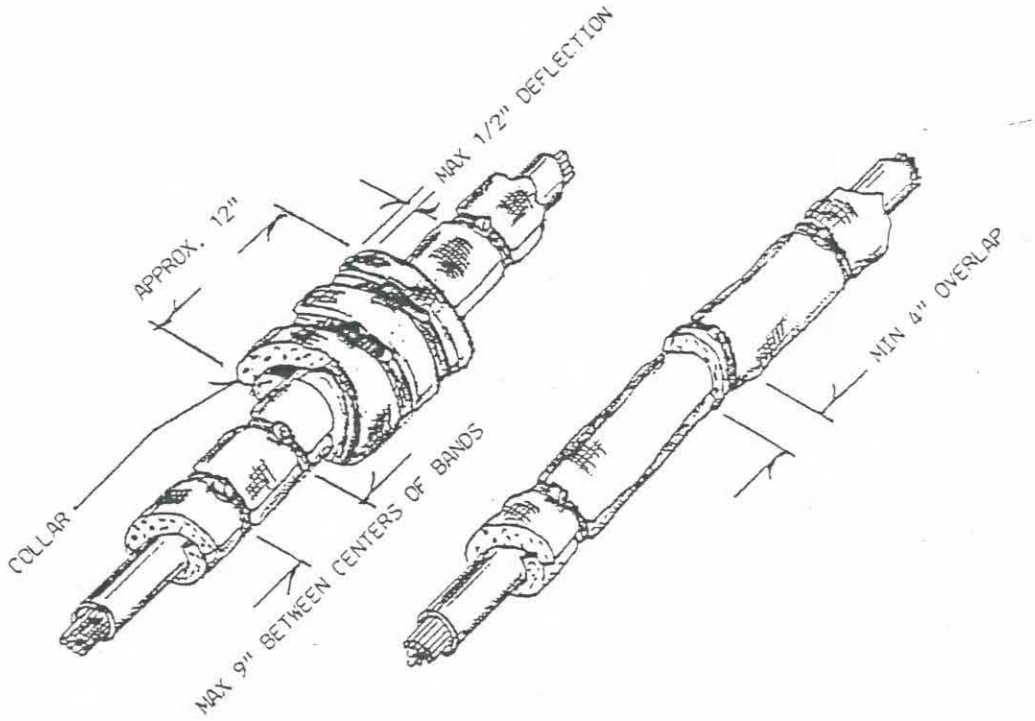

PART B - Figure 12 & Figure 13

Rochester Gas & Electric Note: Due to a pipe interference over Tray 111 the two (2") inch dead air space may be reduced as needed as shown on Figure 12 and 13 below.

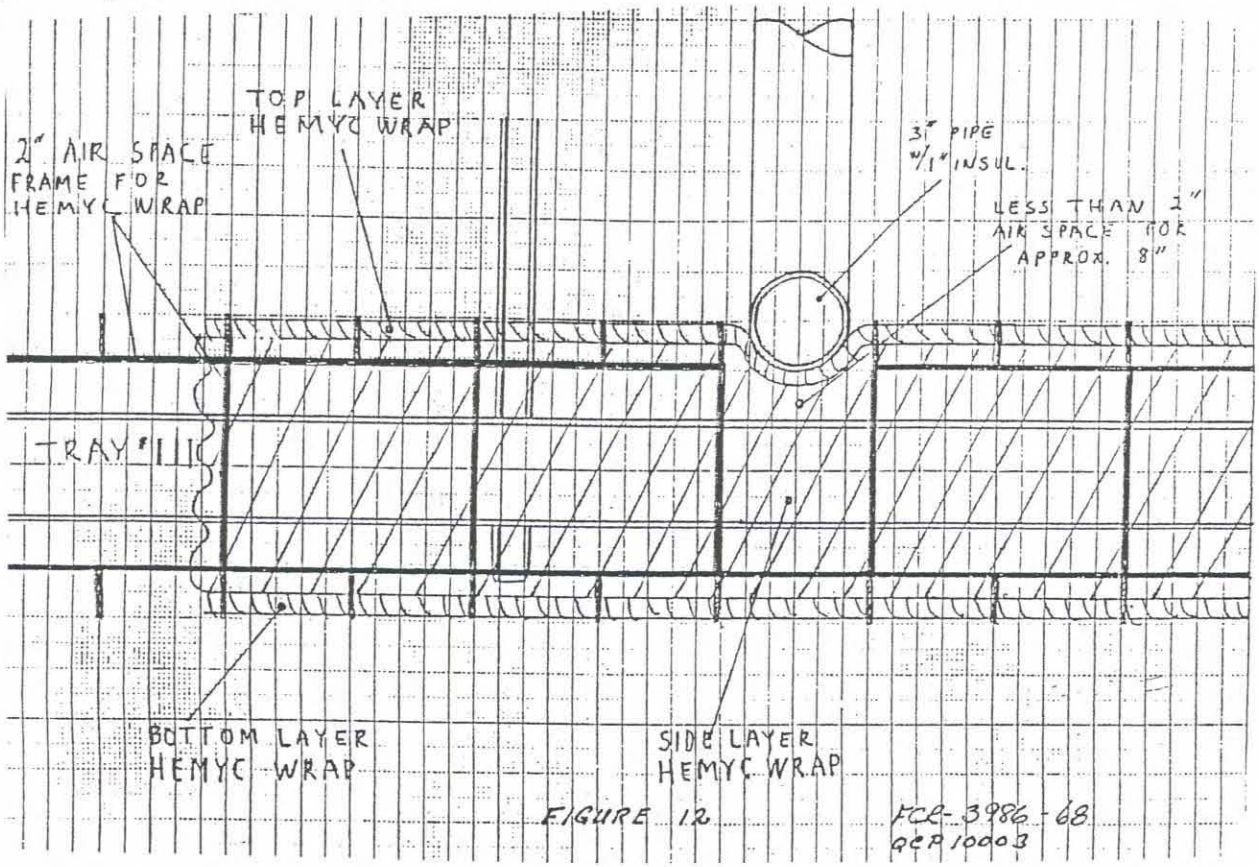

FIGURE 12

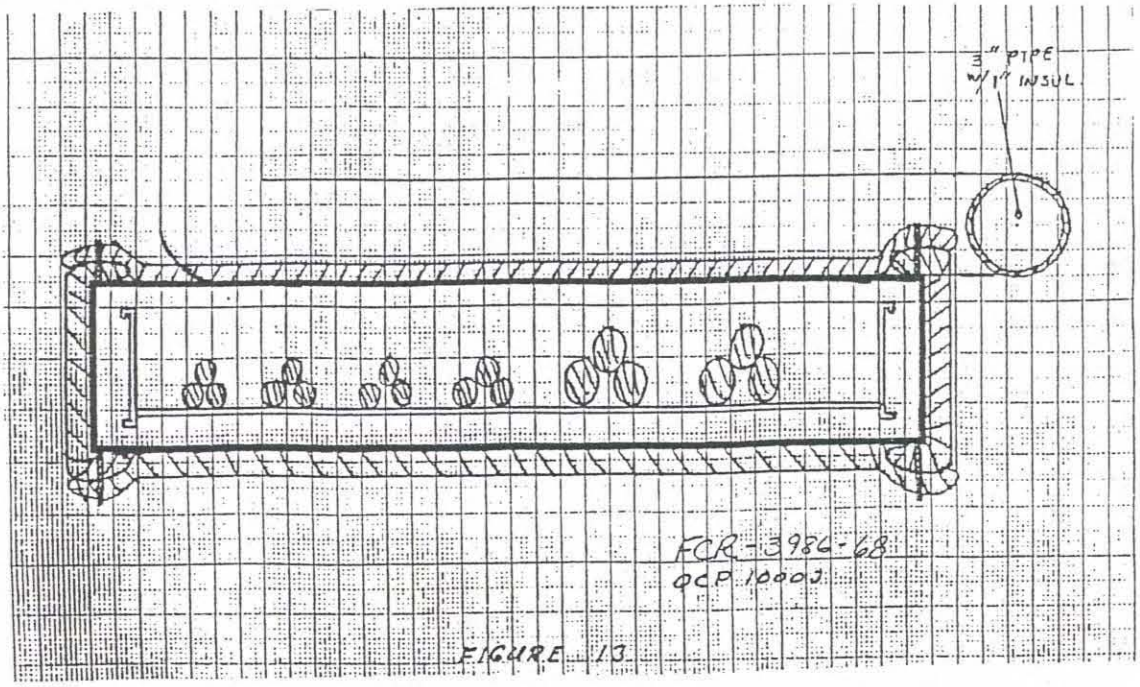

FIGURE 13

ISSUE DESIGNATION IN THIS COLU NDICATES CURRENT CHANGE

ISSUE DESIGNATION IN THIS COL INDICATES CURRENT CHANGE

FABRICATION INSPECTION OF THREE HOUR PROTECTIVE WRAP COMPONENTS

1.0 PURPOSE

1.1 To establish inspection methods and acceptance criteria to assure three hour protective wrap systems are fabricated in accordance with established fabrication procedures.

2.0 SCOPE

2.1 Provide methods for the inspection of protective wrap components during fabrication to verify correct materials are utilized.

2.2 Provide methods for the inspection of protective wrap componets during fabrication to verify conformance to fabrication procedures.

2.3 Provide methods for the final inspection of completed protective wrap components to verify conformance to design requirements.

2.4 Establish requirements for recording inspection activities to provide documentary evidence of proper fabrication.

3.0 REFERENCES

3.1 Procedure No. IP-002, Fabrication Procedure for Three Hour Fire Protective components.

4.0 DEFINITIONS

4.1 Approved Materials -- Materials qualified for use as protective wrap components and issued for fabrication under controlled conditions.

4.2 Hold Point -- Critical steps in the fabrication process that require Quality Control inspection and acceptance prior to proceeding.

4.3 Check Point -- Random sample inspection of fabrication process performed at the descretion of Quality Control. Notification is not required.

4.4 Hot Side -- Outer surface of wrap design.

4.5 Cold Side -- Inner surface of wrap design.

4.6 In-Process Inspection -- Hold Point I and II.

4.7 Final Inspection -- Hold Point III.

ISSUE DESIGNATION IN THIS COL INDICATES CURRENT CHANGE

5.0 RESPONSIBILITIES

5.1 The Quality Assurance Manager or Designee shall be responsible for the development and proper implementation of this procedure.

5.2 The assigned Quality Control Inspector shall be responsible for performing activities established in this procedure.

6.0 PROCEDURE

6.1 Inspection instruments required to perform the activities described in this procedure include a measuring tape. Calibrated instruments are not required.

6.2 Inspection activities (Hold Point I, Hold Point II, Hold Point III) required by this procedure shall be documented on Form QC-61 (Fabrication Inspection Register).

6.3 Approved material traceability identification shall be documented on Form QC-60 (Traceability ID Register).

6.4 Non-conforming conditions identified in paragraph 6.8 shall be documented on Form QC-16 (Nonconformance Report) and dispositioned in accordance with QCP-0018.

6.5 Inspection activities described herein are mandatory hold points. Release for work to proceed shall be given by the assigned Quality Control Inspector upon satisfactory completion of all inspection activities required for each hold point.

6.6 Check point inspections may be performed at any time at the discreation of Quality Control. Such inspections are not mandatory and need not be documented unless discrepancies are identified.

6.7 Discrepancies identified during in process inspection that can be corrected within a (24) twenty four hour period in accorance with Procedure No. IP-002 may be accomplished without generating a non conformance report.

6.8 Non conformance reports shall be generated when any of the following conditions exist.

6.8.1 Discrepancies identified during in-process inspection are not corrected in accordance with IP-002 within (24) twenty four hours.

6.8.2 Discrepancies identified during final inspection where dispositioning party plans to recommend use-as-is, repair or reject dispositions (as defined in QCP-0018).

6.8.3 Any failure to notify Quality Control for hold point inspection prior to proceeding or proceeding prior to acceptance by Quality Control of each inspection attribute required, including satisfactory completion of any discrepancies identified.

6.9 A fabrication order shall be initated and complete, for the exception of the final release signatures at the bottom of Form QC-59, prior to any fabrication.

6.10 Copies of Fabrication Procedure No. IP-002 shall be issued in conjunction with this procedure to each assigned Quality Control Inspector for use and reference.

6.11 Hold Point One -- Material inspection

6.11.1 Only approved materials as listed in IP-002 shall be utilized in the fabrication of three hour fire protective components.

6.11.2 Document individual blanket material traceability on Form QC-60. Document Hold Point I on Form QC-61 after completion of Form QC-60.

6.12 Hold Point Two -- Inspection of inner blanket.

6.12.1 Inspect alumina silicia fiber blanket for proper dimensions in accordance with fabrication order. Verify 6" min. shiplap with 1/2" ± 1/4" deep trim in ceramic fiber blanket.

6.12.2 Inspect fiberglass cloth for proper dimensions in accordance with fabrication order. Verify 3/8" min. tuck allowed for securing hog rings. Verify hog rings are spaced 1" max apart around edges of fiberglass cloth on hot side of envelope.

6.13 Hold Point Two -- Inspection of outer blanket.

6.13.1 The outer blanket consists of two sub-assemblies, enveloped into a silica dioxide cloth. The sub-assemblies consist of, powder envelope (honeycomb and/or straight tubes) and the alumina/silica fiber blanket.

6.13.2 Inspect honeycomb tube powder envelope coated fiberglass cloth for stitching spaced 7/8"± 1/8" apart before powder fill. Verify two sides are stitched 1/2" min. from edge of cloth. Verify two adjacent sides are folded across grain of tube 1"±1/4" and double stitched. Verify 100% fill of powder in tubes. Verify overall dimensions are in accordance with fabrication order 3/4".

ISSUE DESIGNATION IN THIS CO INDICATES CURRENT CHANGE

6.13.3 Inspect straight tube powder envelope coated fiberglass cloth for stitching spaced 1 5/8"±1/8" apart before powder fill. Verify two sides are stitch 1/2" min. from edge of cloth. Verify adjacent two sides are folded across grain of tubes 1"±1/4" and double stitched. Verify 100% fill of powder in tubes. Verify overall dimensions are in accordance with fabrication order 3/4".

6.13.4 Inspect alumina/silica fiber blanket for proper dimensions in accordance with fabrication order. Inspect siltemp for proper dimensions in accordance with fabrication order. Verify siltemp envelope and sub-assemblies (powder envelope and alumina/silica fiber blanket) are placed in proper order and are arranged to allow for min. 6" ship lap design in accordance with fabrication order. Verify siltemp has 3/8" min. tuck for securing hog rings. Verify hog rings are spaced 1" min. around edges of siltemp on cold side of envelope. Type Q-24 telfon coated nylon thread may be used in lieu of hog rings on outer blanket. Verify lacing hooks are placed on hot side 1 1/2" ± 1/4" from edge of all upper shiplap edges and are spaced on maximum of 6" centers. Verify lacing hooks are placed on hot side 7 1/2"±1/4" from edge of all inner ship lap edges and spaced on 6" centers.

6.13.5 Verify that inner and outer blankets are marked with appropriate blanket identification numbers from applicable fabrication order. These markings shall be in min. 3/4" lettering. Marking shall be made with waterproof paint and/or ink which will retain the marking, withstand weather deterioration other handling effects and shall not be deleterious to the fabrics. These markings shall be in close proximity of the edges of any (2) two adjacent sides on the hot side of blanket.

6.13.6 A maximum of two pieces of cermic fiber blanket utilized in one envelope are acceptable only with the use of ship lap design and darting with approved thread to avoid seperation.

6.13.7 A maximum of two pieces of siltemp utilized in one side of envelope are acceptable only with the use of splicing by double stitching. Verify first stitch is 1/2"± 1/4" from edges of siltemp and second stitch is 1/2" ±1/4" from first stitch.

6.14 Hold Point III - Final Inspection

6.14.1 Inspect completed three hour fire protective blankets for damage, proper dimensions and markings in accordance with fabrication order.

6.14.2 Verify Q.C. Forms 59, 60 and 61 are accurately completed.

ISSUE DESIGNATION IN THIS CO INDICATES CURRENT CHANGE

ISSUE DESIGNATION IN THIS CO INDICATES CURRENT CHANGE

7.0 ATTACHMENTS

7.1 Instructions for completion of tractability ID Register. (Form QC-60)

7.2 Form QC-60

7.3 Instruction for completion of Fabrication Inspection Register (Form QC-61)

7.4 Form QC-61

7.5 Instructions for completion of Fabrication Order (Form QC-59).

7.6 Form QC-59

ATTACHMENT 7.1
INSTRUCTIONS FOR COMPLETION OF TRACEABILITY ID REGISTER
FORM QC-60

Report Number	This is a two part number utilizing the numberical portion of the project number and the numerical sequence of the individual report sheet initiated in this project. (i.e. 027/011. This defines the eleventh QC-60 used on project number PMT-027).
Project Name	Name of the project or plant.
Project Number	The PROMATEC job number (i.e. PMT-027)
Fabricaator	Name of company fabricating.
MT Barrier Wrap Identification Number	Identification number assigned on fabrication order (form QC-119)
MFG	Name of appropriate material manufacturer.
Type	Name of appropriate material type/description
I.D. No.	Manufacturers ID/lot number (if applicable).
R.R.#	Promatecs' assigned receiving report number
Inspector By/date	Inspectors initials and date of inspection.

PROMATEC

PROGRESSIVE MATERIALS AND TECHNOLOGIES, INC.

REPORT NUMBER _____

PROJECT NAME _____

PROJECT NUMBER _____

TRACEABILITY ID REGISTER.

FABRICATOR _____

MT BARRIER WRAP			EXTERNAL FABRIC		INTERNAL FABRIC		FILLER MATERIAL		FILLER MATERIAL		THREAD		HARDWARE		INSPECTOR
MFG *			*		*		*		*		*		*	*	
TYPE *			*		*		*		*		*		*	*	
IDENTIFICATION NO:	ID NO.	R.R.#	ID NO.	R.R.#	ID NO.	R.R.#	ID NO.	R.R.#	ID NO.	R.R.#	R.R.#	R.R.#	BY / DATE		

ATTACHMENT 7.3

INSTRUCTION FOR COMPLETION OF FABRICATION INSPECTION REGISTER

FORM QC-61

Report Number	This is a two part number utilizing the numberical portion of the project number and the numerical sequence of the individual report sheet initiated on this project (i.e. 027/011. This defines the eleventh QC-61 used on project number PMT-027.)
Project Name	Name of project or plant.
Project Number	The Promatec job number (i.e. PMT-027).
Fabricator	Name of company fabricating blanket.
MT Barrier Wrap Identification Number	Identification number assigned on fabrication order (form QC-119).
QC-60 Number	Report number of the QC-60, Traceability ID Register for reference to traceability.
Hold Point One	
Reject/Accept	Place check mark in appropriate column.
By	Inspectors initials.
Date	Date of inspection.
Hold Point Two	
Reject/Accept	Place check mark in appropriate column.
By	Inspectors initials.
Date	Date of inspection.
Hold Point Three	
Reject/Accept	Place check mark in appropriate column.
By	Inspectors initials.
Date	Date of inspection.

PROMATEC
PROGRESSIVE MATERIALS AND TECHNOLOGIES, INC.

REPORT NUMBER _____

PROJECT NAME _____

FABRICATION INSPECTION REGISTER

FABRICATOR _____

PROJECT NUMBER _____

MT BARRIER WRAP	FORM	HOLD POINT ONE				HOLD POINT TWO				HOLD POINT THREE			
COMPONENT / BLANKET	QC-60	MATERIAL INSPECTION				FABRICATION INSPECTION				FINAL INSPECTION			
IDENTIFICATION NUMBER	NUMBER	REJECT	ACCEPT	BY	DATE	REJECT	ACCEPT	BY	DATE	REJECT	ACCEPT	BY	DATE

ATTACHMENT 7.5
INSTRUCTIONS FOR COMPLETION OF FORM QC-59

PFO	Promatec fabriction order. Assigned by Corporate Q.A. document control. Prefix with numberic portion of job number. Second portion is numerical sequence on that job. (027/011 represents the eleventh PFO on job #027).
ENG. PORTION	To be completed by Promatec Field Engineers.
PROJECT NAME	Project name.
CUSTOMER	Client
CUSTOMER ORDER NO.	Client order number
JOB NO.	Promatec assigned job number
TYPE	Name of fire protective wrap
QUANTITY	Number of pieces
LENGTH	Dimension in inches
WIDTH	Dimension in inches
THICKNESS	Dimension in inches
TOTAL FT 2	Dimenision in feet
SCHEMATIC DRAWING REF.	
SCHEMATIC NO.	
ID NO.	Individual wrap I.D. No. Ordered by Corporate QA Document Control.
ORDERED BY	Eng. signature
DATE	Date ordered
SKETCH	Eng. to sketch wrap and assign dimension.
CERTIFICTE OF CONFORMANCE	To be completed by Fabricator.
PROMATEC QUALITY ASSURANCE ACCEPTANCE	Promatec Quality Control signature.

ATTACHMENT 7.6

PROMATEC

FABRICATION ORDER

PFO-

PROJECT NAME	CUSTOMER	CUSTOMER ORDER NO.	JOB NO.

TYPE _____ QUANTITY _____

LENGTH _____ WIDTH _____ THICKNESS _____ TOTAL FT^2 _____

SCHEMATIC DRAWING REF. _____ SCHEMATIC NO. _____

I.D. NO. _____

ORDERED BY _____ DATE _____

SKETCH

CERTIFICATE OF CONFORMANCE

We hereby certify that all items furnished were fabricated with materials provided by PROMATEC and conform to the requirements of Purchase Order No. _____.

Signature _____ Company _____ Date _____

PROMATEC QUALITY ASSURANCE ACCEPTANCE

Signature _____ Title _____ Date _____

Form QC-59
Rev. 1 - 10/16/85

ISSUE DESIGNATION IN THIS COLUMN INDICATES CURRENT CHANGE

INSTALLATION INSPECTION OF THREE HOUR PROTECTIVE FIRE WRAP SYSTEMS

1.0 PURPOSE

To establish inspection methods and acceptance criteria to assure three hour protective wrap systems are installed in accordance with established installation procedures.

2.1 SCOPE

2.1 To provide methods for the inspection of protective wrap components during installation to verify correct materials are issued.

2.2 To provide methods for in-process and final inspection of protective wrap systems to verify conformance to design requirements.

2.3 To establish requirements for recording inspection activities to provide documentary evidence proper installation.

3.0 REFERENCES

3.1 Procedure No. IP-001, Installation of Three Hour Fire Protective Wrap Systems

3.2 Typical Design Detail B-495 and B-496

3.3 Procedure No. QCP-0042, Fabrication Inspection of Three Hour Protective Wrap Components

4.0 DEFINITIONS

4.1 **APPROVED MATERIALS** - Materials qualified for use as protective wrap system components and issued for installation under controlled conditions.

4.2 **HOLD POINT** - Criteria steps in the installation process that require Quality Control inspection and acceptance prior to proceeding.

4.3 **CHECK POINT** - Random sample inspection of installation processes performed at the discretion of Quality Control. Notification is not required.

5.0 RESPONSIBILITIES

5.1 The Quality Assurance Manager or Designee shall be responsible for the development and proper implementation of this procedure.

5.2 The assigned Quality Control Inspector shall be responsible for performing activities established in this procedure.

5.3 The Construction Manager or Designee shall be responsible for assuring that craft personnel notify Quality Control for inspections as referenced in IP-001.

ISSUE DESIGNATION IN THIS COLU NDICATES CURRENT CHANGE

6.0 PROCEDURE

6.1 Inspection instruments required to perform the activities described in this procedure include a six (6") inch scale and a measuring tape. Calibrated instruments are not required.

D 6.2 Inspection activities required by this procedure shall be documented on Form No. QC-117 (Three Hour Fire Protective Wrap Inspection Report) or an approved QC checklist. Nonconforming conditions identified in accordance with paragraph 6.5 shall be documented on Form QC-16 (Nonconformance Report) and dispositioned in accordance with Procedure No. QCP-0018.

D 6.3 Inspection activities described herein are mandatory hold points. Release for work to proceed shall be given by the assigned Quality Control Inspector upon satisfactory completion of all inspection activities required for each hold point and sign-off of Form QC-117 or approved QC checklist.

6.4 Random sample check points may be performed at anytime at the discretion of Quality Control. Such inspections are not mandatory and need not be documented unless discrepancies are identified.

6.5 Minor deviations identified during in-process inspection may be corrected without the issuance of Nonconformance Reports provided corrective action is taken immediately and documented on Form QC- 117 or an approved QC checklist. Minor deviations that cannot be corrected immediately shall be documented on Form QC-121 and processed in accordance with Procedure No. QCP-0018.

6.6 Nonconforming conditions that could adversely affect product integrity shall be documented on Form No. QC-16 and processed in accordance with Procedure No. QCP-0018.

6.7 Copies of Installation Procedure No. IP-001 shall be issued in conjunction with this procedure to each assigned Quality Control Inspector for field use and reference.

6.8 Conduit, Cable Drop and Junction Box Wrap Inspection.

6.8.1 Hold Point One - Inner Blanket Inspection

6.8.1.1 For cable drops, verify that cables are bundled tightly with duct tape, cable tie wrap or other suitable means.

D 6.8.1.2 Upon completion of installation, verify that serial number for each blanket is clearly visible and record on Form QC-117 or approved QC checklist.

6.8.1.3 Visually examine each blanket for damage. Holes and tears exceeding one (1") inch shall be repaired in accordance with IP-001 and re-inspected per section 6.13 of this procedure.

6.8.1.4 Inspect shiplap joints on each blanket for tightness and verify that gaps, if any, do not exceed one-half (1/2") inch, including blanket to blanket joints.

ISSUE DESIGNATION IN THIS COLU NDICATES CURRENT CHANGE

D

6.8.1.5 Inspect duct tape and verify application at full circumference around each blanket with tape to tape adhesion

6.8.2 Hold Point Two - Foil Barrier Inspection

6.8.2.1 Upon completion of installation visually examine each foil barrier strip for damage. Cuts, tears and holes shall be repaired with additional strips of foil exceeding one (1") inch and re-inspected prior to installation of outer blankets.

6.8.2.2 Inspect each foil barrier strip for lengthwise application and verify a minimum six (6") inch overlap on ends and edges (two (2") inches for sharp curvatures).

6.8.2.3 Inspect tape for sufficient spacing to assure no excessive gaps exist in overlaps with particular emphasis on conduit curvatures.

6.8.3 Hold Point Three - Outer Blanket Inspection

6.8.3.1 Upon completion of installation, verify that serial number for each blanket is clearly visible and record on Form QC-117 or approved QC checklist.

6.8.3.2 Visually examine each blanket for damage. Holes and tears exceeding one (1") inch shall be repaired in accordance with IP-001 and re-inspected per section 6.13 of this procedure.

6.8.3.3 Inspect shiplap joints for tightness and proper alignment. Verify that gaps, if any, do not exceed one-half (1/2") inch. Inspect each lacing hook and verify 16 gauge stainelss steel tie wire is securely fastened between each adjacent hook.

6.8.4 Hold Point Four - Final Inspection

6.8.4.1 Perform final examination of completed system to assure correct installation in accordance with this section.

6.8.4.2 Verify that correct raceway identification tags are affixed at all entrance and exit points (walls, floors) and at origin and destination points on runs five (5') feet and longer or at the most visible location on runs less than five (5') feet.

6.9 Three sided wrap installation inspection

6.9.1 Hold Point One - Concrete Anchor Inspection

6.9.1.1 Upon completion of installation inspect anchors for compliance to site requirements.

6.9.1.2 Measure anchor spacing for maximum twelve (12") inch centers and verify that each anchor is pre-set.

6.9.2 Hold Point Two - Inner Blanket Inspection

6.9.2.1 Upon completion of installation inspect each blanket in accordance with subsection 6.8.1 of this procedure. Additionally:

6.9.2.2 Inspect each blanket and verify proper alignment following impalement through studs.

6.9.2.3 Measure from blanket edges of each inner blanket to center of corresponding studs and verify minimum two (2") extension.

6.9.3 Hold Point Three - Foil Barrier Inspection

6.9.3.1 Upon completion of installation inspect each foil barrier strip in accordance with subsection 6.8.2. Additionally:

6.9.3.2 Inspect each foil barrier strip and verify proper alignment following impalement through studs.

6.9.3.3 Measure from edges of foil barrier to center of studs on each barrier strip and verify minimum two (2") extension.

6.9.4 Hold Point Four - Outer Blanket Inspection

6.9.4.1 Upon completion of installation inspect each blanket in accordance with subsection 6.8.3 . Additionally:

6.9.4.2 Inspect blanket and verify proper alignment following impalement through studs.

6.9.4.3 Inspect anchor assembly and verify that fender washers and/or B72 studs and/or flat bars are in place and that locknuts (or double nuts) are securely tightened.

6.9.4.4 Visually examine blanket assembly for wrinkles and bunches, and verify that assembly is not depressed over three-fourth (3/4") inch at anchors.

6.9.5 Hold Point Five - Final Inspection

6.9.5.1 Perform final examination of completed system to assure correct installation in accordance with this section.

6.9.5.2 Verify that correct raceway identification tags are affixed at all entrance and exit points (walls, floors) and at origin and destination points on runs five (5') feet and longer or at the most visible location on runs less than five (5') feet.

6.10 Field Modification Inspection - Non-Electrical Interferences

6.10.1 Hold Point One - Fabrication Inspection

D 6.10.1.1 Upon issuance of alumina silica blankets and outer fabric for fabrication record lot number(s) and receiving report number(s) on Form No. QC-117 or approved QC checklist.

ISSUE DESIGNATION IN THIS COLL INDICATES CURRENT CHANGE

6.10.2 Hold Point Two - Installation Inspection

6.10.2.1 Upon completion of fabrication and installation, verify correct thickness based alumina silica blanket size issued (actual measurement is not required due to blanket compression factor). Measure for minimum distance of eighteen (18") inches from point of interference or full length if interference is less than eighteen (18") inches.

6.10.2.2 Inspect lacing hooks and tie wire fasteners for sufficient spacing and tightness (six (6") inch minimum spacing is not required for interferences).

6.10.2.3 Inspect blanket joint and seam, and verify that no apparent gaps exist.

6.11 Cable Tray Interference Installation Inspection

6.11.1 Hold Point - Cable Inspection

D 6.11.1.1 Upon issuance of alumina silica blankets, record lot number and receiving report number on Form QC-117 or approved QC checklist.

6.11.1.2 Upon completion of installation inspect alumina silica blanket and verify that distance from each side of protected conduit is a minimum of eighteen (18") inches.

6.11.2 Cable Tray Interference Wrap Inspection

6.11.2.1 Installation inspection of cable tray wrap systems shall be in accordance with section 6.8 of this procedure and design details as established by Engineering.

6.12 Inspection of Field Fabrication Components

6.12.1 Primary wrap components fabricated in the field shall be inspected and documented in accordance with QCP-0042 prior to installation.

D 6.12.2 Field fabrication of items used for modification of existing wrap components shall be inspected in accordance with the applicable sections of QCP-0042. Inspection results and material traceability shall be recorded on Form QC-117 (or approved QC checklist) in lieu of Form QC-60 and QC-61.

6.13 Field Repair Inspection

D 6.13.1 Record lot numbers and receiving report numbers for materials issued for use on Form No. QC-117 or approved QC checklist.

6.13.2 Upon completion of installation inspect for tightness and verify that patch overlaps a minimum of two (2") inches on undamaged fabric, and that patches have finished edges.

ISSUE DESIGNATION IN THIS COLL NDICATES CURRENT CHANGE

6.13.3 Inspect Q-24 thread stitching on patches and tears two (2") inches and under and verify minimum spacing of one-half (1/2") inch.

6.14 When the alternate method for installing outer blanket assemblies is utilized as described in subsection 6.6 of IP-001, the following Inspection Hold Point shall apply in lieu of subsection 6.8.3 and 6.8.4.

6.14.1 Hold Point Three - Tube Assembly Inspection

D 6.14.1.1 Upon completion of tube assembly installation, verify that serial numbers are clearly visible and record on Form QC-117 or approved QC checklist.

6.14.1.2 Visually examine each component for damage and verify that tubes are parallel with system run. Holes and tears shall be patches with aluminum or duct tape to prevent powder leakage. If holes and tears result in excessive powder loss, the affected component shall be replaced.

6.14.1.3 Inspect circumferential and longitudinal joints and verify abutting fit with no apparent gaps. Inspect duct tape for sufficient spacing and tape to tape adhesion.

6.14.2 Hold Point Four - Alumina Silica Blanket Inspection

D 6.14.2.1 Upon completion of installation of each alumina silica blanket, verify that serial number is clearly visible and record on Form QC-117 or an approved QC checklist.

6.14.2.2 Visually examine each blanket for damage. Holes or tears in fabric exceeding one (1") inch shall be repaired per IP-001 and inspected per section 6.13 of this procedure.

6.14.2.3 Verify that circumferential and longitudinal joints are staggered a minimum six (6") inches from tube assembly joints.

6.14.2.4 Inspect longitudinal and circumferential joints for tightness with no apparent gaps. Verify that 16 gauge stainless steel tie wire is securely fastened between adjacent lacing hooks.

6.14.3 Hold Point Five - Final Inspection

6.14.3.1 Upon completion of total system installation perform final visual inspection of system to assure compliance with all applicable requirements.

6.14.3.2 Verify that correct raceway identification tags are affixed in accordance with paragraph 6.8.4.2.

7.0 ATTACHMENTS

7.1 Form No. QC-117, Three Hour Protective Wrap Inspection Report

7.2 Form No. QC-122, Three Hour MT Barrier Installation Inspection Report Register

ISSUE DESIGNATION IN THIS COLL INDICATES CURRENT CHANGE

MATEC

INSTALLATION INSPECTION REPORT
THREE HOUR MT BARRIER

Page 1 of ____

Report .: /

Project Name:	Job No.:	Raceway I.D. No.:	Schematic No.:	System Description:	Area:	Elevation:

Component Identification Number	Type	Hold Point No.	Tags/ Marking		Visual		Shiplap Overlap		Seam/ Joint		Duct Tape		Stagger		Lacing Hooks		Tie Wire		Anchors		Bolting		Cable-Blanket Bundle		Length/ Thick-ness		Repair/ Modif.		Insp. Initial	Insp. Date
			A	U	A	U	A	U	A	U	A	U	A	U	A	U	A	U	A	U	A	U	A	U	A	U	A	U		

SUPPLEMENTAL MATERIALS TRACEABILITY

TYPE	LOT NO.	APPLICATION	TYPE	LOT NO.	APPLICATION

REMARKS:

Final Acceptance:	Date:	Client Acceptance:	Date:

FORM QC-117

3 HR MT BARRIER
INSTALLATION INSPECTION REPORT REGISTER

PROJECT NAME: _____

PROJECT NO.: _____

REPORT NUMBER	RACEWAY I.D. NO.	SCHEMATIC NUMBER	SYSTEM DESCRIPTION	RELEASE DATE	ACCEPTANCE DATE	COMMENTS

FORM QC-122 REV. 1-07/20/95

PROMATEC

FABRICATION ORDER

PFO-

PROJECT NAME	CUSTOMER	CUSTOMER ORDER NO.	JOB NO.

TYPE _____ QUANTITY _____

LENGTH _____ WIDTH _____ THICKNESS _____ TOTAL FT² _____

SCHEMATIC DRAWING REF. _____ SCHEMATIC NO. _____

I.D. NO. _____

ORDERED BY _____ DATE _____

SKETCH

CERTIFICATE OF CONFORMANCE

We hereby certify that all items furnished were fabricated with materials provided by PROMATEC and conform to the requirements of Purchase Order No. _____.

Signature _____ Company _____ Date _____

PROMATEC QUALITY ASSURANCE ACCEPTANCE

Signature _____ Title _____ Date _____

Form QC-59
Rev. 1 - 10/16/85

(QC 002)

PROJECT NAME _____

PROJECT NUMBER _____

FABRICATOR _____

FABRICATOR ADDRESS _____

REPORT NUMBER ____-_____

TRACEABILITY ID REGISTER

CABLE WRAP FABRICATION

FORM QC-60

03/01/83

REV. 1 - 11/20/84

REV. 2 - 03/04/85

BLANKET NUMBER/ FAB ORDER NUMBER	EXTERNAL FABRIC MFG: _____ TYPE: _____ MFG ID NO:	INTERNAL FABRIC MFG: _____ TYPE: _____ MFG ID NO:	FILLER MATERIAL MFG: _____ TYPE: _____ MFG ID NO:	THREAD 1 MFG: _____ TYPE: _____ MFG ID NO:	COMMENTS	DATE	BY

Appendix F

QA DOCUMENTATION FOR HEMYC INSTALLATION

SANDIA TEST NUMBER 1

FABRICATION AND INSTALLATION CLARIFICATIONS

1. Hemyc pieces used to cover the 90° angles on conduits and hangers were factory stitched miters (except for the 4" conduits A & B and the Junction Box hanger pieces 1I-7 & 8 and 1I-9 & 10 which were field stitched miters).
2. Hemyc pieces used to cover the conduit radial sweeps were factory stitched gores. After installation the Hemyc was opened on the heel of the radius of Conduit C and D, additional Kaowool was added and a patch was applied to fill joint separation.
3. An addition band was installed on the 90° angles on Conduit A and the 2 field fabricated Junction Box Hangers to reduce the distance between bands, as measured on the heel side, to less than 9". Also an additional band was added just above the vertical perimeter overlap joint on Conduit C to close down the longitudinal overlap joint.
4. A 4" width of 2" thick Kaowool and a field fabricated 6" wide collar (1C-C1 and 1D-C4) was added to the top of the radius piece on the 2 – 2 _" Conduits C & D, to extend the coverage out of the furnace the minimum 6" to 12".
5. Field fabricated darts were added to field fabricated piece # 1I-6 after it was installed. The darts did not penetrate through the inner cloth. They only penetrated through approximately 1 _" of the Kaowool.
6. An additional field fabricated collar was added above the 90° angles on Conduits A and B due to an additional Perimeter Butt Joint that was required for 1A-3 and 1B-3.
7. The circumference length of pieces 1A-2A, 1A-2B, 1B-2A and 1B-2B were too long and violated the maximum 2" longitudinal overlap. These pieces were field modified. The circumference of the pieces was reduced by 3 1/2 " along longitudinal overlap portion of the pieces so they would meet the 2" maximum overlap.
8. Patches of Refrasil cloth were installed over various areas were the cloth was scuffed or torn during installation.
9. IP-8400.103, Issue G specifies an 8" minimum width on collars for perimeter butt joints and a 4" perimeter overlap joint. A 6" maximum width collar and a 2" maximum perimeter overlap was used in the test that conform to the minimum collar and overlap dimensions specified in IP-8400.103, Issue E (5/1/84).
10. Two field fabricated Hemyc pads were used to cover the interior hanger supports for 1I.

Mike w Jordan
3-30-03

Q/A RECEIVING REPORT

CLIENT/PROJECT NAME Sandia
LIENT/PROJECT NUMBER 14790-123263, 64465
RECEIVED FROM Promatec
PROJECT LOCATION Omega Point Labs

REPORT NUMBER 2698 . 14790
DATE RECEIVED 3-3-05
DATE INSPECTED 3-3-05
INSPECTED BY: [illegible]

ITEM DESCRIPTION	P.O . NO.	QUANTITY Order	QUANTITY Rec'd	QUANTITY B.O.	I.D. NO.	CON'tD MATL Y/N	CERT REC'D Y/N	SAFETY RELATED Y/N	CONTAINER INTEGRITY	ACCEPTANCE Accept	ACCEPTANCE Hold	ACCEPTANCE Reject	REMARKS
Hemyc	NA	~~0~~	various	~~0~~	See attached Sheets	Y	N	N	GOOD	X			Promatec brought the Hemyc material with them. All pieces were labeled w/appropriate numbering. Receiving only

09-016-11/02

Complete

PCI PERFORMANCE CONTRACTING INC PROMATEC

FABRICATION ORDER

PFO - 051179

PROJECT NAME	CUSTOMER	CUSTOMER ORDER NO.	JOB NO.
HEMYC TEST #1	SANDIA LAB	401177 Rev. 1	1039

TYPE ONE HOUR QUANTITY 8

LENGTH SEE DRAWING WIDTH SEE DRAWING THICKNESS 2" TOTAL FT ² _____

SCHEMATIC DRAWING REF. SEE BELOW SCHEMATIC NO. N/A

I.D. NO. 4" CONDUIT # 1B

ORDERED BY MICHAEL JORDAN DATE 2/22/05

SKETCH

SEE ATTACHED SEGMENT DRAWINGS

4235495-30-3 1B-1 ✓
1B-2 B + 1B-2A - 29-3
29-2 1B-3
30-2 1B-4 ✓
30-3 1B-5 ✓
29-3 1B-C1
29-3 1B-C2
29-3 1B-C3
1B-6 - 29-3
29-3 1B-C4 - 29-2

CERTIFICATE OF CONFORMANCE

We hereby certify that all items furnished were fabricated with materials provided by PCI-Promatec and conform to the requirements of Purchase Order No. 051179.

Signature _____ Company _____ Date _____

PCI-PROMATEC QUALITY ASSURANCE ACCEPTANCE

Signature _____ Title _____ Date _____

Form QC-59
Rev. 2 – 02/18/05

Complete

PCI PERFORMANCE CONTRACTING INC PROMATEC

FABRICATION ORDER

PFO - 051179

PROJECT NAME	CUSTOMER	CUSTOMER ORDER NO.	JOB NO.
HEMYC TEST #1	SANDIA LAB	401177 Rev. 1	1039

TYPE ONE HOUR QUANTITY 8

LENGTH SEE DRAWING WIDTH SEE DRAWING THICKNESS 2" TOTAL FT ² _____

SCHEMATIC DRAWING REF. SEE BELOW SCHEMATIC NO. N/A

I.D. NO. 4" CONDUIT # 1A

ORDERED BY MICHAEL JORDAN DATE 2/22/05

SKETCH

SEE ATTACHED SEGMENT DRAWINGS

4235495-30-3 1A-1 ✓
29-3 1A-2 A+B ✓
29-3 1A-3 ✓
30-2 1A-4 ✓
30-3 1A-5 ✓
29-3 1A-C1 ✓
29-3 1A-C2 ✓
29-3 1A-C3 ✓
29-3 1A-C4 ✓

CERTIFICATE OF CONFORMANCE

We hereby certify that all items furnished were fabricated with materials provided by PCI-Promatec and conform to the requirements of Purchase Order No. 051179.

Signature _____ Company _____ Date _____

PCI-PROMATEC QUALITY ASSURANCE ACCEPTANCE

Signature _____ Title _____ Date _____

Form QC-59
Rev. 2 – 02/18/05

PCI PERFORMANCE CONTRACTING INC PROMATEC

FABRICATION ORDER

PFO - 051179

PROJECT NAME	CUSTOMER	CUSTOMER ORDER NO.	JOB NO.
HEMYC TEST #1	SANDIA LAB	401177 Rev. 1	1039

TYPE ONE HOUR QUANTITY 8

LENGTH SEE DRAWING WIDTH SEE DRAWING THICKNESS 2" TOTAL FT ² _____

SCHEMATIC DRAWING REF. SEE BELOW SCHEMATIC NO. N/A

I.D. NO. 2 1/2" CONDUIT # 1D

ORDERED BY MICHAEL JORDAN DATE 2/22/05

SKETCH

SEE ATTACHED SEGMENT DRAWINGS

4235495-30-3 1D-1 ✓
29-2 1D-2
30-2 1D-3
30-3 1D-4
1D-5 ✓
" 1D-C1
" 1D-C2
" 1D-C3

CERTIFICATE OF CONFORMANCE

We hereby certify that all items furnished were fabricated with materials provided by PCI-Promatec and conform to the requirements of Purchase Order No. 051179.

Signature _____ Company _____ Date _____

PCI-PROMATEC QUALITY ASSURANCE ACCEPTANCE

Signature _____ Title _____ Date _____

Form QC-59
Rev. 2 – 02/18/05

Complete

PCI PERFORMANCE CONTRACTING INC PROMATEC

FABRICATION ORDER

PFO - 051179

PROJECT NAME	CUSTOMER	CUSTOMER ORDER NO.	JOB NO.
HEMYC TEST #1	SANDIA LAB	401177 Rev. 1	1039

TYPE ONE HOUR QUANTITY 5

LENGTH SEE DRAWING WIDTH SEE DRAWING THICKNESS 2" TOTAL FT ²

SCHEMATIC DRAWING REF. SEE BELOW SCHEMATIC NO. N/A

I.D. NO. 2 1/2" CONDUIT # 1C Over Caps

ORDERED BY MICHAEL JORDAN DATE 2/22/05

SKETCH

SEE ATTACHED SEGMENT DRAWINGS

4235495- 29-2 1C-1
29-2 1C-2 ✓
29-2 1C-3
29-3 1C-4 ✓
29-3 1C-5

CERTIFICATE OF CONFORMANCE

We hereby certify that all items furnished were fabricated with materials provided by PCI-Promatec and conform to the requirements of Purchase Order No. 0521179.

Signature _____ Company _____ Date _____

PCI-PROMATEC QUALITY ASSURANCE ACCEPTANCE

Signature _____ Title _____ Date _____

Form QC-59
Rev. 2 – 02/18/05

Complete

PCI PERFORMANCE CONTRACTING INC PROMATEC

FABRICATION ORDER

PFO - 051179

PROJECT NAME	CUSTOMER	CUSTOMER ORDER NO.	JOB NO.
HEMYC TEST #1	SANDIA LAB	401177 Rev. 1	1039

TYPE ONE HOUR QUANTITY 8

LENGTH SEE DRAWING WIDTH SEE DRAWING THICKNESS 2" TOTAL FT ² _____

SCHEMATIC DRAWING REF. SEE BELOW SCHEMATIC NO. N/A

I.D. NO. 1" CONDUIT # 1E

ORDERED BY MICHAEL JORDAN DATE 2/22/05

SKETCH

SEE ATTACHED SEGMENT DRAWINGS

4235495-30.3 1E-1 ✓
29.2 1E-2
1E-3
30.3 1E-4 ✓
1E-5 ✓
30-3 1E-C1 ✓
30-2 1E-C2
30-2 1E-C3
~~1E-C4~~

CERTIFICATE OF CONFORMANCE

We hereby certify that all items furnished were fabricated with materials provided by PCI-Promatec and conform to the requirements of Purchase Order No. 051179 .

Signature _____ Company _____ Date _____

PCI-PROMATEC QUALITY ASSURANCE ACCEPTANCE

Signature _____ Title _____ Date _____

Form QC-59
Rev. 2 – 02/18/05

PERFORMANCE CONTRACTING INC PROMATEC

FABRICATION ORDER

PFC 051179

PROJECT NAME	CUSTOMER	CUSTOMER ORDER NO.	JOB NO.
HEMYC TEST #1	SANDIA LAB	401177 Rev. 1	1039

TYPE ONE HOUR QUANTITY 2

LENGTH SEE DRAWING WIDTH SEE DRAWING THICKNESS 2" TOTAL FT ² _____

SCHEMATIC DRAWING REF. SEE BELOW SCHEMATIC NO. N/A

I.D. NO. HANGER 1H

ORDERED BY MICHAEL JORDAN DATE 2/22/05

SKETCH

SEE ATTACHED SEGMENT DRAWINGS

4235495-29.3 1H-1
~~30.3~~ 29.3 1H-2

CERTIFICATE OF CONFORMANCE

We hereby certify that all items furnished were fabricated with materials provided by PCI-Promatec and conform to the requirements of Purchase Order No. 051179.

Signature _____ Company _____ Date _____

PCI-PROMATEC QUALITY ASSURANCE ACCEPTANCE

Signature _____ Title _____ Date _____

Form QC-59
Rev. 2 – 02/18/05

Complete

PCI PERFORMANCE CONTRACTING INC PROMATEC	FABRICATION ORDER	PFO - 051179 Page 348

PROJECT NAME	CUSTOMER	CUSTOMER ORDER NO.	JOB NO.
HEMYC TEST #1	SANDIA LAB	401177 Rev. 1	1039

TYPE ONE HOUR QUANTITY 2

LENGTH SEE DRAWING WIDTH SEE DRAWING THICKNESS 2" TOTAL FT ² _____

SCHEMATIC DRAWING REF. SEE BELOW SCHEMATIC NO. N/A

I.D. NO. HANGER 1G

ORDERED BY MICHAEL JORDAN DATE 2/22/05

SKETCH

SEE ATTACHED SEGMENT DRAWINGS

~~30-2~~ 29-3 { 1G-1, 1G-2

29-3 { 1H-1, 1H-2

CERTIFICATE OF CONFORMANCE

We hereby certify that all items furnished were fabricated with materials provided by PCI-Promatec and conform to the requirements of Purchase Order No. 051179.

Signature _____ Company _____ Date _____

PCI-PROMATEC QUALITY ASSURANCE ACCEPTANCE

Signature _____ Title _____ Date _____

Form QC-59
Rev. 2 – 02/18/05

PCI PERFORMANCE CONTRACTING INC PROMATEC

TRACEABILITY ID REGISTER

REPORT NUMBER 1

PROJECT NAME Sandia #1

PROJECT NUMBER 1039

FABRICATOR MIT Conduit A

MT BARRIER WRAP	EXTERNAL FABRIC		INTERNAL FABRIC		FILLER MATERIAL		FILLER MATERIAL		THREAD		HARDWARE		INSPECTOR
MFG	Hitco		Hitco		Kaowool		N/A		Alpha		N/A		JT
TYPE	Refrasil-18		Refrasil		#8				Q-24				
IDENTIFICATION NO.	I.D. NO.	R.R.#	I.D. NO.	R.R.#	I.D. NO.	R.R.#	I.D. NO.	R.R.#	I.D. NO.	R.R.#	R.R.#	R.R.#	BY / DATE
	4235495-	R051104	4235495-		4365A-2	R051105			35957	R051102			3/5/05
1A-1	30-3		30-3										
1A-2 A+B	29-3		29-3										
1A-3	29-3		29-3										
1A-4	30-4		30-4										
1A-5	30-3		30-3										
1A-C1	29-3		29-3										
1A-C2	29-3		29-3										
1A-C3	29-3		29-3										
1A-C4	29-3		29-3										

FORM QC-60 rev. 3 (4/15/86)

PCI PERFORMANCE CONTRACTING INC PROMATEC

TRACEABILITY ID REGISTER

REPORT NUMBER 1

PROJECT NAME Sandia #1

PROJECT NUMBER 1039.

FABRICATOR MIT Conduit #1A

MT BARRIER WRAP	EXTERNAL FABRIC		INTERNAL FABRIC		FILLER MATERIAL		FILLER MATERIAL		THREAD		HARDWARE		INSPECTOR
MFG	Hitco		Hitco		Kaowool		N/A		Alpha		N/A		JT
TYPE	Refrasil-18		Refrasil		#8				Q-24				
IDENTIFICATION NO.	I.D. NO.	R.R.#	I.D. NO.	R.R.#	I.D. NO.	R.R.#	I.D. NO.	R.R.#	I.D. NO.	R.R.#	R.R.#	R.R.#	BY / DATE
	4235495-	R051104	4235495-		4365A-2	R051105			35957	R05162			3/5/05
1A-1	30-3		30-3										
1A-2 A+B	29-3		29-3										
1A-3	29-3		29-3										
1A-4	30-4		30-4										
1A-5	30-3		30-3										
1A-C1	29-3		29-3										
1A-C2	29-3		29-3										
1A-C3	29-3		29-3										
1A-C4	29-3		29-3										

PCI PERFORMANCE CONTRACTING INC PROMATEC

TRACEABILITY ID REGISTER

REPORT NUMBER 1

PROJECT NAME Sandia #1

PROJECT NUMBER 1039

FABRICATOR MIT Conduit #1B

MT BARRIER WRAP	EXTERNAL FABRIC		INTERNAL FABRIC		FILLER MATERIAL		FILLER MATERIAL		THREAD		HARDWARE		INSPECTOR
MFG	Hitco		Hitco		Kaowool #8		N/A		Alpha Q-24		N/A		J.T.
TYPE	Refrasil-18		Refrasil										
IDENTIFICATION NO.	I.D. NO.	R.R.#	I.D. NO.	R.R.#	I.D. NO.	R.R.#	I.D. NO.	R.R.#	I.D. NO.	R.R.#	R.R.#	R.R.#	BY / DATE
	4235495-	R051104	4235495-		4365A-2	R051105			35957	R051102			3/5/05
1B-1	30-3		30-3										
1B-2A	29-3		29-3										
1B-2B	29-3		29-3										
1B-3	29-2		29-2										
1B-4	30-2		30-2										
1B-5	30-3		30-3										
1B-C1	29-2		29-2										
1B-C2	29-3		29-3										
1B-C3	29-2		29-2										
1B-C4	29-2		29-2										

PCI PERFORMANCE CONTRACTING INC PROMATEC

TRACEABILITY ID REGISTER

REPORT NUMBER 1

PROJECT NAME Sandia #1

PROJECT NUMBER 1039

FABRICATOR MIT CONDUIT #1C

MT BARRIER WRAP	EXTERNAL FABRIC		INTERNAL FABRIC		FILLER MATERIAL		FILLER MATERIAL		THREAD		HARDWARE		INSPECTOR
MFG	Hitco		Hitco		Kaowool #8		N/A		Alpha Q-24		N/A		JT
TYPE	Refrasil-18		Refrasil										
IDENTIFICATION NO.	I.D. NO.	R.R.#	I.D. NO.	R.R.#	I.D. NO.	R.R.#	I.D. NO.	R.R.#	I.D. NO.	R.R.#	R.R.#	R.R.#	BY / DATE
	4235495-	R051104	4235495-		4365A-2	R051105			35957	R051102			3/5/05
1C-1	29-2		29-2										
1C-2	29-2		29-2										
1C-3	29-2		29-2										
1C-4	29-3		29-3										
1C-5	29-3		29-3										
1C-C1	30-1		30-1										

PCI PERFORMANCE CONTRACTING INC PROMATEC

TRACEABILITY ID REGISTER

REPORT NUMBER 1

PROJECT NAME Sandia #1

PROJECT NUMBER 1039

FABRICATOR MIT 2½ CONDUIT #1D

MT BARRIER WRAP	EXTERNAL FABRIC		INTERNAL FABRIC		FILLER MATERIAL		FILLER MATERIAL		THREAD		HARDWARE		INSPECTOR
MFG	Hitco		Hitco		Kaowool #8		N/A		Alpha Q-24		N/A		JT
TYPE	Refrasil-18		Refrasil										
IDENTIFICATION NO.	I.D. NO.	R.R.#	I.D. NO.	R.R.#	I.D. NO.	R.R.#	I.D. NO.	R.R.#	I.D. NO.	R.R.#	R.R.#	R.R.#	BY / DATE
	4235495	R051104	4235495		4365A-2	R051105			35957	R051102			3/5/05
1D-1	30.3		30.3										
1D-2	29.2		29.2										
1D-3	29.2		29.2										
1D-4	30-2		30-2										
1D-5	30-3		30-3										
1D-C1	30-3		30-3										
1D-C2	30-3		30-3										
1D-C-3	30-3		30-3										
1D-C-4	30-3		30-3										

PCI PERFORMANCE CONTRACTING INC PROMATEC

TRACEABILITY ID REGISTER

REPORT NUMBER 1

PROJECT NAME Sandia #1

PROJECT NUMBER 1039

FABRICATOR MIT 1" CONDUIT #1E

MT BARRIER WRAP	EXTERNAL FABRIC		INTERNAL FABRIC		FILLER MATERIAL		FILLER MATERIAL		THREAD		HARDWARE		INSPECTOR
MFG	Hitco		Hitco		Kaowool #8		N/A		Alpha R-24		N/A		J.T.
TYPE	Refrasil-18		Refrasil										
IDENTIFICATION NO.	I.D. NO.	R.R.#	I.D. NO.	R.R.#	I.D. NO.	R.R.#	I.D. NO.	R.R.#	I.D. NO.	R.R.#	R.R.#	R.R.#	BY / DATE
	4235495-	105104	4235495-		4365A-2	105105			35957	105102			3/5/05
1E-1	30-3		30-3										
1E-2	29-2		29-2										
1E-3	29-2		29-2										
1E-4	30-3		30-3										
1E-5	30-3		30-3										
1E-C1	30-3		30-3										
1E-C2	30-2		30-2										
1E-C3	30-2		30-2										

PCI PERFORMANCE CONTRACTING INC PROMATEC

TRACEABILITY ID REGISTER

REPORT NUMBER 1

PROJECT NAME Sandia #1

PROJECT NUMBER 1039

FABRICATOR MIT 1" CONDUIT #1F

MT BARRIER WRAP	EXTERNAL FABRIC		INTERNAL FABRIC		FILLER MATERIAL		FILLER MATERIAL		THREAD		HARDWARE		INSPECTOR
MFG	Hitco		Hitco		Kaowool #8		N/A		Alpha R-24		N/A		JT
TYPE	Refrasil-18		Refrasil										
IDENTIFICATION NO.	I.D. NO.	R.R.#	I.D. NO.	R.R.#	I.D. NO.	R.R.#	I.D. NO.	R.R.#	I.D. NO.	R.R.#	R.R.#	R.R.#	BY / DATE
	4235495	R051104	4235495		4365A-2	R051105			35957	R051102			3/5/05
1F-1	30-3		30-3										
1F-2	29-2		29-2										
1F-3	30-2		30-2										
1F-4	29-3		29-3										
1F-5	30-2		30-2										

PCI PERFORMANCE CONTRACTING INC PROMATEC

TRACEABILITY ID REGISTER

REPORT NUMBER 1

PROJECT NAME Sandia #1

PROJECT NUMBER 1039

FABRICATOR MIT HANGER 1G

MT BARRIER WRAP	EXTERNAL FABRIC		INTERNAL FABRIC		FILLER MATERIAL		FILLER MATERIAL		THREAD		HARDWARE		INSPECTOR
MFG	Hitco		Hitco		Kaowool #8		N/A		Alpha R-24		N/A		J.T.
TYPE	Refrasil-18		Refrasil										
IDENTIFICATION NO.	I.D. NO.	R.R.#	I.D. NO.	R.R.#	I.D. NO.	R.R.#	I.D. NO.	R.R.#	I.D. NO.	R.R.#	R.R.#	R.R.#	BY / DATE
	4235495	R051104	4235495		4365A-2	R051105			35957	R051102			3/5/05
1G-1	29-3		29-3										
1G-2	29-3		29-3										

PCI PERFORMANCE CONTRACTING INC PROMATEC

TRACEABILITY ID REGISTER

REPORT NUMBER 1

PROJECT NAME Sandia #1

PROJECT NUMBER 1039

FABRICATOR MIT HANGER 1H

MT BARRIER WRAP	EXTERNAL FABRIC		INTERNAL FABRIC		FILLER MATERIAL		FILLER MATERIAL		THREAD		HARDWARE		INSPECTOR
MFG	Hitco		Hitco		Kaowool		N/A		Alpha		N/A		J.T.
TYPE	Refrasil-18		Refrasil		#8				Q-24				
IDENTIFICATION NO.	I.D. NO.	R.R.#	I.D. NO.	R.R.#	I.D. NO.	R.R.#	I.D. NO.	R.R.#	I.D. NO.	R.R.#	R.R.#	R.R.#	BY / DATE
	4235495-	P051104	4235495-		4365A-2	Lot#05			35957	P051102			3/5/05
1H-1	29.3		29.3		↓	↓			↓				↓
1H-2	29.3		29.3										

PCI PERFORMANCE CONTRACTING INC PROMATEC

TRACEABILITY ID REGISTER

REPORT NUMBER 1

PROJECT NAME Sandia #1

PROJECT NUMBER 1039

FABRICATOR MIT Junction Box I

MT BARRIER WRAP	EXTERNAL FABRIC		INTERNAL FABRIC		FILLER MATERIAL		FILLER MATERIAL		THREAD		HARDWARE		INSPECTOR
MFG	Hitco		Hitco		Kaowool #8		N/A		Alpha Q-24		N/A		J.T.
TYPE	Refrasil-18		Refrasil										
IDENTIFICATION NO.	I.D. NO.	R.R.#	I.D. NO.	R.R.#	I.D. NO.	R.R.#	I.D. NO.	R.R.#	I.D. NO.	R.R.#	R.R.#	R.R.#	BY / DATE
	4235495-	R051104	4235495		4365A-2	R051105			35957	R051102			3/5/05
11-1	30-1		30-1										
11-2	30-1		30-1										
11-3	30-1		30-1										
11-4	30-1		30-1										
11-5	30-3		30-3										
11-6	30-1		30-1										
11-7	30-1		30-1										
11-8	30-1		30-1										
11-9	30-1		30-1										
11-10	30-1		30-1										

HOLD POINT INSPECTION & CLIENT FINAL SIGNOFF REPORT

PCI PERFORMANCE CONTRACTING INC PROMATEC

(QCP-10003)

PROJECT NAME: SANDIA #1

PROJECT NUMBER: 1039

REPORT NO.

STRUCTURAL INSPECTION

IDENTIFICATION NUMBER CABLE TRAY/CONDUIT	LOCATION - AREA/ELEVATION/ROOM ETC.	QC HOLD POINTS - STRUCTURAL INTEGRITY						VISUAL INSPECTION & RELEASE			
		1 DEAD AIR SPACE-2"	2 CLAMP DEVICES	3 FRAME SECURE	4 BLANKET ANCHORS	5 CONCRETE ANCHORS	6 OTHER --------	PASS	REJECT	DATE	BY
				N/A							

WRAP INSTALLATION INSPECTION & ACCEPTANCE

BLANKET NO./FAB ORDER NO.									QC HOLD POINTS - WRAP INSTALLATION				QC HOLD POINT 6 & FINAL ACCEPTANCE				
COND.	CABLE TRAY(S)								1 OVERLAPS 2" MIN	2 WRAP RETAINE INTACT	3 BANDING DEFLECT	4 TERMINATION ADEQUATE	VISUAL INSPECTION			FINAL ACCEPTANCE	
	TOP	BOTTOM	SIDE	SIDE	SIDE	SIDE	SIDE	SIDE					ACCEPT	HOLD	REJECT	DATE	BY
#1A									J.T.	J.T.	J.T.	N/A	JT			3/5/05	J.T.

N/A

FORM QC-62/REV. 1 07-20-95

HOLD POINT INSPECTION & CLIENT FINAL SIGNOFF REPORT

PERFORMANCE CONTRACTING INC
PROMATEC

(QCP-10003)

PROJECT NAME: SANDIA #1

PROJECT NUMBER: 1039

REPORT NO.

STRUCTURAL INSPECTION

IDENTIFICATION NUMBER CABLE TRAY/CONDUIT	LOCATION - AREA/ELEVATION/ROOM ETC.	QC HOLD POINTS - STRUCTURAL INTEGRITY						VISUAL INSPECTION & RELEASE			
		1 DEAD AIR SPACE-2"	2 CLAMP DEVICES	3 FRAME SECURE	4 BLANKET ANCHORS	5 CONCRETE ANCHORS	6 OTHER --------	PASS	REJECT	DATE	BY
				N/A							

WRAP INSTALLATION INSPECTION & ACCEPTANCE

BLANKET NO./FAB ORDER NO.									QC HOLD POINTS - WRAP INSTALLATION				QC HOLD POINT 6 & FINAL ACCEPTANCE				
COND.	CABLE TRAY(S)								1 OVERLAPS 2½" MIN	2 WRAP RETAINE INTACT	3 BANDING DEFLECT	4 TERMINATION ADEQUATE	VISUAL INSPECTION			FINAL ACCEPTANCE	
	TOP	BOT.	SIDE	SIDE	SIDE	SIDE	SIDE	SIDE					ACCEPT	HOLD	REJECT	DATE	BY
#1B									J.T.	J.T.	J.T.	J.T.	J.T.			3/5/05	J.T.

N/A

FORM QC-62/REV. 1 07-20-95

HOLD POINT INSPECTION & CLIENT FINAL SIGNOFF REPORT

PCI PERFORMANCE CONTRACTING INC PROMATEC

(QCP-10003)

PROJECT NAME: SANDIA #1

PROJECT NUMBER: 1039

REPORT NO.

STRUCTURAL INSPECTION

IDENTIFICATION NUMBER CABLE TRAY/CONDUIT	LOCATION - AREA/ELEVATION/ROOM ETC.	QC HOLD POINTS - STRUCTURAL INTEGRITY						VISUAL INSPECTION & RELEASE			
		1 DEAD AIR SPACE-2"	2 CLAMP DEVICES	3 FRAME SECURE	4 BLANKET ANCHORS	5 CONCRETE ANCHORS	6 OTHER --------	PASS	REJECT	DATE	BY
				N/A							
				N							

WRAP INSTALLATION INSPECTION & ACCEPTANCE

BLANKET NO./FAB ORDER NO.									QC HOLD POINTS - WRAP INSTALLATION				QC HOLD POINT 6 & FINAL ACCEPTANCE				
COND.	CABLE TRAY(S)								1 OVERLAPS	2 WRAP RETAINE	3 BANDING	4 TERMINATION	VISUAL INSPECTION			FINAL ACCEPTANCE	
	TOP	BOT.	SIDE	SIDE	SIDE	SIDE	SIDE	SIDE	2" MIN	INTACT	DEFLECT	ADEQUATE	ACCEPT	HOLD	REJECT	DATE	BY
#1C									J.T.	J.T.	J.T.	J.T.	J.T.			3/5/05	J.T.
					N/A												

FORM QC-62/REV. 1 07-20-95

HOLD POINT INSPECTION & CLIENT FINAL SIGNOFF REPORT

PCI PERFORMANCE CONTRACTING INC PROMATEC

(QCP-10003)

PROJECT NAME: SANDIA #1

PROJECT NUMBER: 1039

REPORT NO.

STRUCTURAL INSPECTION

IDENTIFICATION NUMBER CABLE TRAY/CONDUIT	LOCATION - AREA/ELEVATION/ROOM ETC.	QC HOLD POINTS - STRUCTURAL INTEGRITY						VISUAL INSPECTION & RELEASE			
		1 DEAD AIR SPACE-2"	2 CLAMP DEVICES	3 FRAME SECURE	4 BLANKET ANCHORS	5 CONCRETE ANCHORS	6 OTHER --------	PASS	REJECT	DATE	BY
				N/A							

WRAP INSTALLATION INSPECTION & ACCEPTANCE

BLANKET NO./FAB ORDER NO.									QC HOLD POINTS - WRAP INSTALLATION				QC HOLD POINT 6 & FINAL ACCEPTANCE				
COND.	CABLE TRAY(S)								1 OVERLAPS 2" MIN	2 WRAP RETAINE INTACT	3 BANDING DEFLECT	4 TERMINATION ADEQUATE	VISUAL INSPECTION			FINAL ACCEPTANCE	
	TOP	BOT.	SIDE	SIDE	SIDE	SIDE	SIDE	SIDE					ACCEPT	HOLD	REJECT	DATE	BY
#1D									J.T.	J.T.	J.T.	J.T.	J.T.			3/5/05	J.T.
					N/A												

FORM QC-62/REV. 1 07-20-95

HOLD POINT INSPECTION & CLIENT FINAL SIGNOFF REPORT

PCI PERFORMANCE CONTRACTING INC PROMATEC

(QCP-10003)

PROJECT NAME: SANDIA #1

PROJECT NUMBER: 1039

REPORT NO.

STRUCTURAL INSPECTION

IDENTIFICATION NUMBER CABLE TRAY/CONDUIT	LOCATION - AREA/ELEVATION/ROOM ETC.	QC HOLD POINTS - STRUCTURAL INTEGRITY						VISUAL INSPECTION & RELEASE			
		1 DEAD AIR SPACE-2"	2 CLAMP DEVICES	3 FRAME SECURE	4 BLANKET ANCHORS	5 CONCRETE ANCHORS	6 OTHER --------	PASS	REJECT	DATE	BY
				N/A							

WRAP INSTALLATION INSPECTION & ACCEPTANCE

BLANKET NO./FAB ORDER NO.									QC HOLD POINTS - WRAP INSTALLATION				QC HOLD POINT 6 & FINAL ACCEPTANCE				
COND.	CABLE TRAY(S)								1 OVERLAPS	2 WRAP RETAINE	3 BANDING	4 TERMINATION	VISUAL INSPECTION			FINAL ACCEPTANCE	
	TOP	BOT.	SIDE	SIDE	SIDE	SIDE	SIDE	SIDE	2" MIN	INTACT	DEFLECT	ADEQUATE	ACCEPT	HOLD	REJECT	DATE	BY
#1E									J.T.	J.T.	J.T.	J.T.	J.T.			3/31/05	J.T.
						N/A											

FORM QC-62/REV. 1 07-20-95

HOLD POINT INSPECTION & CLIENT FINAL SIGNOFF REPORT

PERFORMANCE CONTRACTING INC
PROMATEC

(QCP-10003)

PROJECT NAME: SANDIA #1

PROJECT NUMBER: 1039

REPORT NO.

STRUCTURAL INSPECTION

IDENTIFICATION NUMBER CABLE TRAY/CONDUIT	LOCATION - AREA/ELEVATION/ROOM ETC.	QC HOLD POINTS - STRUCTURAL INTEGRITY						VISUAL INSPECTION & RELEASE			
		1 DEAD AIR SPACE-2"	2 CLAMP DEVICES	3 FRAME SECURE	4 BLANKET ANCHORS	5 CONCRETE ANCHORS	6 OTHER --------	PASS	REJECT	DATE	BY
				N/A							
				N							

WRAP INSTALLATION INSPECTION & ACCEPTANCE

BLANKET NO./FAB ORDER NO.									QC HOLD POINTS - WRAP INSTALLATION				QC HOLD POINT 6 & FINAL ACCEPTANCE				
COND.	CABLE TRAY(S)								1 OVERLAPS	2 WRAP RETAINE	3 BANDING	4 TERMINATION	VISUAL INSPECTION			FINAL ACCEPTANCE	
	TOP	BOT.	SIDE	SIDE	SIDE	SIDE	SIDE	SIDE	2 1/2" MIN	INTACT	DEFLECT	ADEQUATE	ACCEPT	HOLD	REJECT	DATE	BY
#1F									J.T.	J.T.	J.T.	J.T.	J.T.			3/5/05	J.T.
				N/A													

FORM QC-62/REV. 1 07-20-95

HOLD POINT INSPECTION & CLIENT FINAL SIGNOFF REPORT

PCI PERFORMANCE CONTRACTING INC PROMATEC

(QCP-10003)

PROJECT NAME: SANDIA # 1

PROJECT NUMBER: 1039

REPORT NO.

STRUCTURAL INSPECTION

IDENTIFICATION NUMBER CABLE TRAY/CONDUIT	LOCATION - AREA/ELEVATION/ROOM ETC.	QC HOLD POINTS - STRUCTURAL INTEGRITY						VISUAL INSPECTION & RELEASE			
		1 DEAD AIR SPACE-2"	2 CLAMP DEVICES	3 FRAME SECURE	4 BLANKET ANCHORS	5 CONCRETE ANCHORS	6 OTHER --------	PASS	REJECT	DATE	BY
		N/A									

WRAP INSTALLATION INSPECTION & ACCEPTANCE

BLANKET NO./FAB ORDER NO.									QC HOLD POINTS - WRAP INSTALLATION				QC HOLD POINT 6 & FINAL ACCEPTANCE				
COND.	CABLE TRAY(S)								1 OVERLAPS 2" MIN	2 WRAP RETAINE INTACT	3 BANDING DEFLECT	4 TERMINATION ADEQUATE	VISUAL INSPECTION			FINAL ACCEPTANCE	
	TOP	BOT.	SIDE	SIDE	SIDE	SIDE	SIDE	SIDE					ACCEPT	HOLD	REJECT	DATE	BY
HANGER 1G-1									J.T.	J.T.	J.T.	J.T.	J.T.			3/5/05	J.T.
HANGER 1G-2									J.T.	J.T.	J.T.	J.T.	J.T.			3/5/05	J.T.

N/A

FORM QC-62/REV. 1 07-20-95

HOLD POINT INSPECTION & CLIENT FINAL SIGNOFF REPORT

PCI PERFORMANCE CONTRACTING INC PROMATEC

(QCP-10003)

PROJECT NAME: SANDIA #1

PROJECT NUMBER: 1039

REPORT NO.

STRUCTURAL INSPECTION

IDENTIFICATION NUMBER CABLE TRAY/CONDUIT	LOCATION - AREA/ELEVATION/ROOM ETC.	QC HOLD POINTS - STRUCTURAL INTEGRITY						VISUAL INSPECTION & RELEASE			
		1 DEAD AIR SPACE-2"	2 CLAMP DEVICES	3 FRAME SECURE	4 BLANKET ANCHORS	5 CONCRETE ANCHORS	6 OTHER --------	PASS	REJECT	DATE	BY
				N/A							

WRAP INSTALLATION INSPECTION & ACCEPTANCE

BLANKET NO./FAB ORDER NO.									QC HOLD POINTS - WRAP INSTALLATION				QC HOLD POINT 6 & FINAL ACCEPTANCE				
COND.	CABLE TRAY(S)								1 OVERLAPS	2 WRAP RETAINE	3 BANDING	4 TERMINATION	VISUAL INSPECTION			FINAL ACCEPTANCE	
	TOP	BOT.	SIDE	SIDE	SIDE	SIDE	SIDE	SIDE	2¼" MIN	INTACT	DEFLECT	ADEQUATE	ACCEPT	HOLD	REJECT	DATE	BY
HANGER 1H-1									J.T.	J.T.	J.T.	J.T.	J.T.			3/5/05	J.T.
HANGER 1H-2									J.T.	J.T.	J.T.	J.T.	J.T.				J.T.
										N/A							

FORM QC-62/REV. 1 07-20-95