Entergy

**Entergy Nuclear Northeast**
Entergy Nuclear Operations, Inc.
Vermont Yankee
185 Old Ferry Rd.
P.O. Box 500
Brattleboro, VT 05302
Tel 802-257-5271

October 7, 2004

Docket No. 50-271
BVY 04-109
TAC No. MC0761

ATTN: Document Control Desk
U.S. Nuclear Regulatory Commission
Washington, DC 20555-0001

Subject: **Vermont Yankee Nuclear Power Station**
**Technical Specification Proposed Change No. 263 – Supplement No. 19**
**Extended Power Uprate – Initial Plant Test Program**

References:
1) Entergy letter to U.S. Nuclear Regulatory Commission, "Vermont Yankee Nuclear Power Station, License No. DPR-28 (Docket No. 50-271), Technical Specification Proposed Change No. 263 – Supplement No. 3, Extended Power Uprate – Updated Information," BVY 03-98, October 28, 2003

2) Vermont Yankee Nuclear Power Corporation letter to U.S. Atomic Energy Commission, [Startup Test Report], dated May 2, 1974

This letter provides additional information in support of the application by Entergy Nuclear Vermont Yankee, LLC and Entergy Nuclear Operations, Inc. (Entergy) for a license amendment to increase the maximum authorized power level of the Vermont Yankee Nuclear Power Station (VYNPS) from 1593 megawatts thermal (MWt) to 1912 MWt.

Reference 1 provided information that updated the subject license amendment application regarding planned extended power uprate (EPU) power ascension testing. As a benchmark for EPU testing, the initial startup and power test program is described in section 13.5 of the VYNPS Final Safety Analysis Report. This submittal draws comparisons between the two test programs, reviews historical testing, and provides additional justification for the proposed EPU power ascension testing program.

Following the receipt of a low-power (i.e., 1%) operating license that was issued on March 21, 1972, fuel loading and startup testing commenced at VYNPS. During the first operating cycle, testing was completed on all startup tests scheduled to be performed up to the 75% core thermal power level. The startup test results up to 75% power are documented in Reference 2. Startup testing at 100% power was subsequently performed, and the full power warranty run was completed in February 1975.

A001

Attachment 1 to this letter is a copy of Figure VI from VYNPS Startup Test Procedure No. 0 (STP-0). Figure VI depicts the sequence of startup testing, by procedure number, from initial fuel loading through full power testing. STP-0 provided the schedule basis for the original startup test program that began in 1972.

Attachment 2 provides summaries from historical startup testing records and further justifies not performing certain startup tests during EPU power ascension testing. The information in Attachments 1 and 2 to this letter supplements the bases for the proposed EPU testing program provided in Reference 1. The proposed power ascension testing verifies that the plant can be operated safely under EPU conditions.

Reference 1 contains the complete set of startup tests that will be reperformed for EPU, including justifications for not performing certain tests. As discussed in Reference 1, it is not necessary to conduct or repeat certain steady-state and transient performance tests that provide little or no value toward demonstrating that structures, systems, or components (SSCs) will perform satisfactorily after EPU.

Generic Evaluations Supporting Exclusion of Power Ascension Tests

The EPU power ascension test plan does not include all of the power ascension testing that would typically be performed during the initial startup of a new plant. The following factors apply in determining which of the initial startup tests may be excluded from EPU power ascension testing:

- Previous operating experience has demonstrated acceptable performance of SSCs under a variety of steady state and transient conditions. The state of knowledge concerning reactor dynamics has advanced over approximately 30 years of industry experience since the initial startup of VYNPS.

- The effects of VYNPS EPU are in conformance with the criteria of the NRC-accepted Constant Pressure Power Uprate Licensing Topical Report (GE Nuclear Energy, "Constant Pressure Power Uprate," Licensing Topical Report NEDC-33004P-A (Proprietary), July 2003, and NEDO-33004-A (Non-Proprietary), July 2003).

- Because the EPU is a constant pressure power uprate, the effects on SSCs due to changes in thermal-hydraulic phenomena are limited.

- Most of the plant modifications associated with EPU were installed and tested during the spring 2004 refueling outage and subsequent restart. Therefore, modified plant equipment has been in service since that time, and plant staff familiarization with changes in plant operation as a result of the modifications has occurred.

This supplement to the license amendment request provides additional information to clarify Entergy's application for a license amendment and does not change the scope or conclusions in the original application, nor does it change Entergy's determination of no significant hazards consideration.

There are no new regulatory commitments contained in this submittal.

If you have any questions or require additional information, please contact Mr. James M. DeVincentis at (802) 258-4236.

I declare under penalty of perjury that the foregoing is true and correct.

Executed on October 7, 2004.

Sincerely,

Jay K. Thayer
Site Vice President
Vermont Yankee Nuclear Power Station

Attachments (2)

cc: Mr. Richard B. Ennis, Project Manager (w/attachments)
Project Directorate I
Division of Licensing Project Management
Office of Nuclear Reactor Regulation
Mail Stop O 8 B1
Washington, DC 20555

Mr. Samuel J. Collins (w/o attachments)
Regional Administrator, Region 1
U.S. Nuclear Regulatory Commission
475 Allendale Road
King of Prussia, PA 19406-1415

USNRC Resident Inspector (w/o attachments)
Entergy Nuclear Vermont Yankee, LLC
P.O. Box 157
Vernon, Vermont 05354

Mr. David O'Brien, Commissioner (w/attachments)
VT Department of Public Service
112 State Street – Drawer 20
Montpelier, Vermont 05620-2601

Attachment 1

Vermont Yankee Nuclear Power Station

Proposed Technical Specification Change No. 263 – Supplement No. 19

Extended Power Uprate – Initial Plant Test Program

Sequence of Initial Startup Testing (STP-0)

Total number of pages in Attachment 1 (excluding this cover sheet) is 9.

PHASE TWO-F[illegible] LOADING
(1% License)

FICURE VI


1 - Test point

(2) - Control point

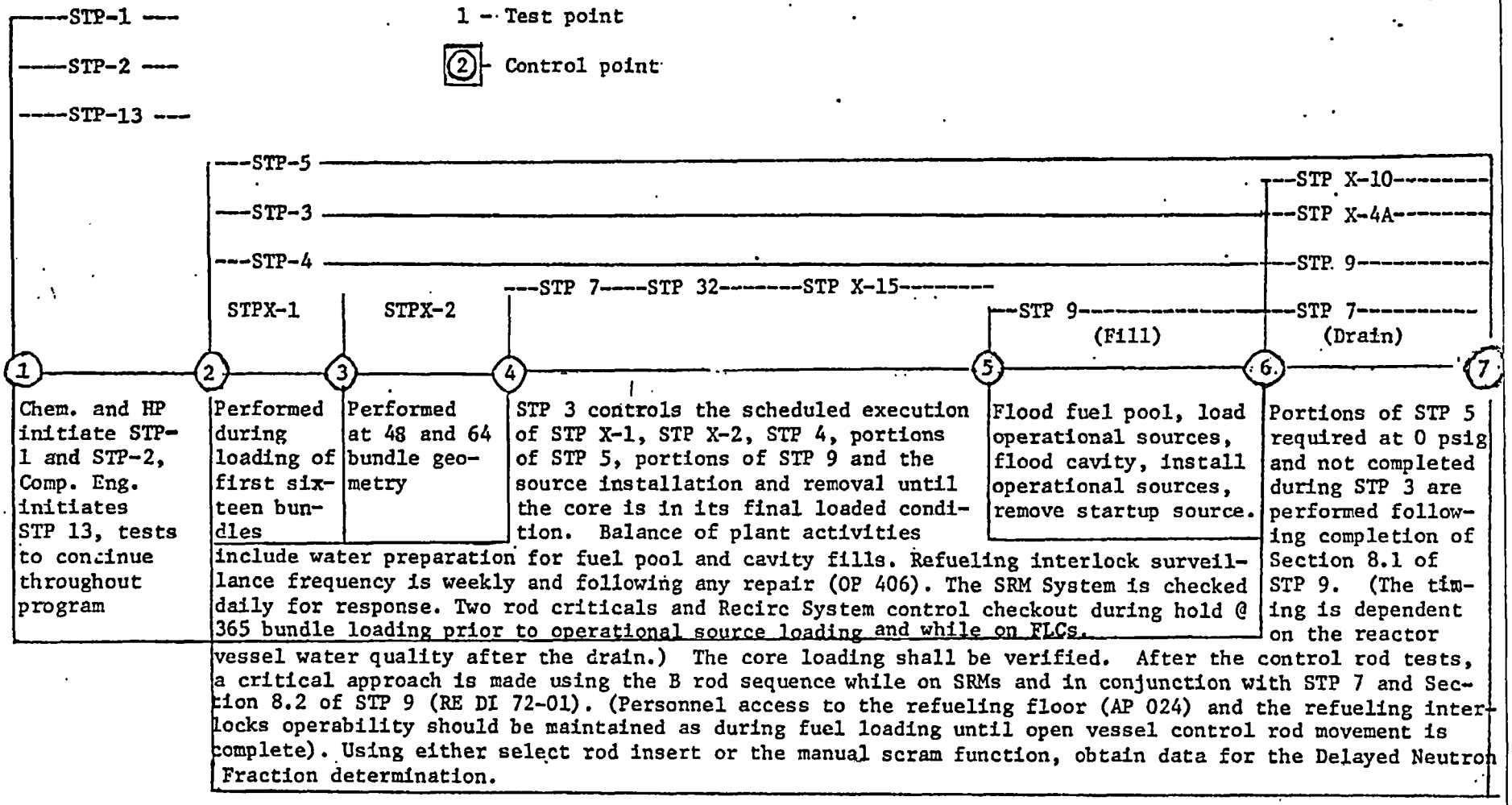


DRAFT

PHASE TWO - REACTOR SYSTEM ASSEMBLY

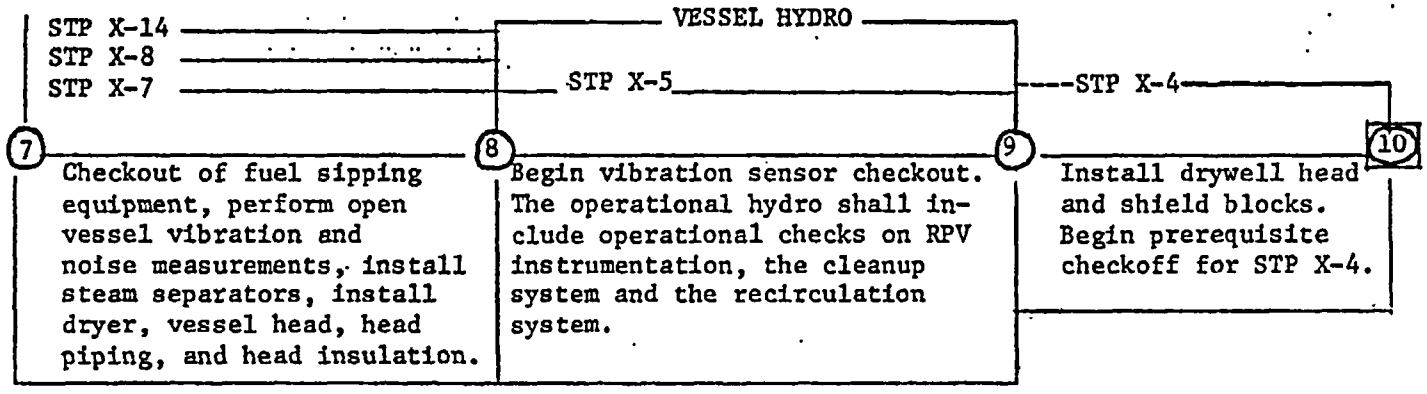

PHASE THREE HEATUP TESTS

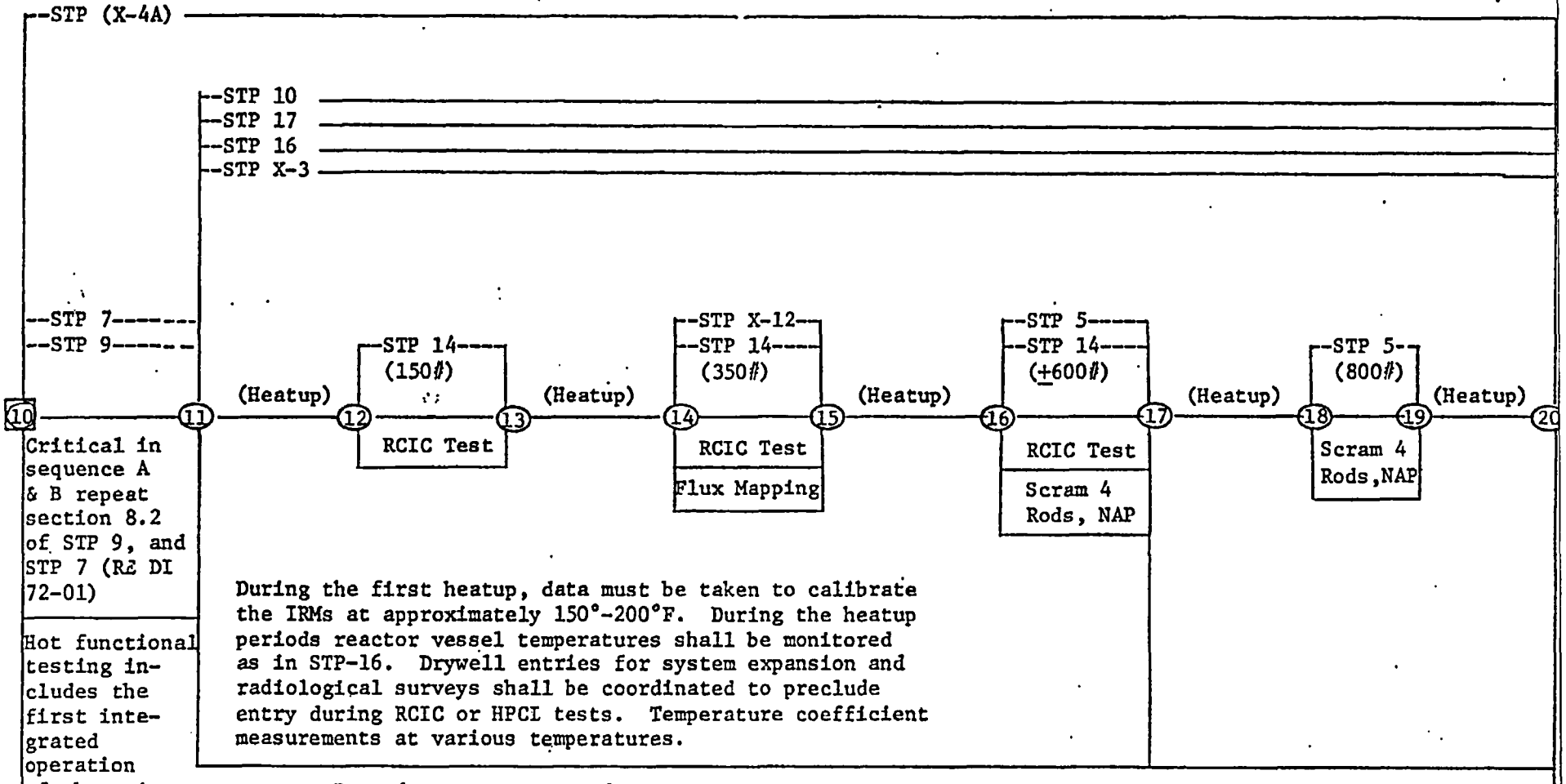


STP X-4 is the integrated test of both primary and secondary systems. STP X-4A is an appendix to STP X-4 covering the integrated testing of the primary systems under the terms of a 1% license.

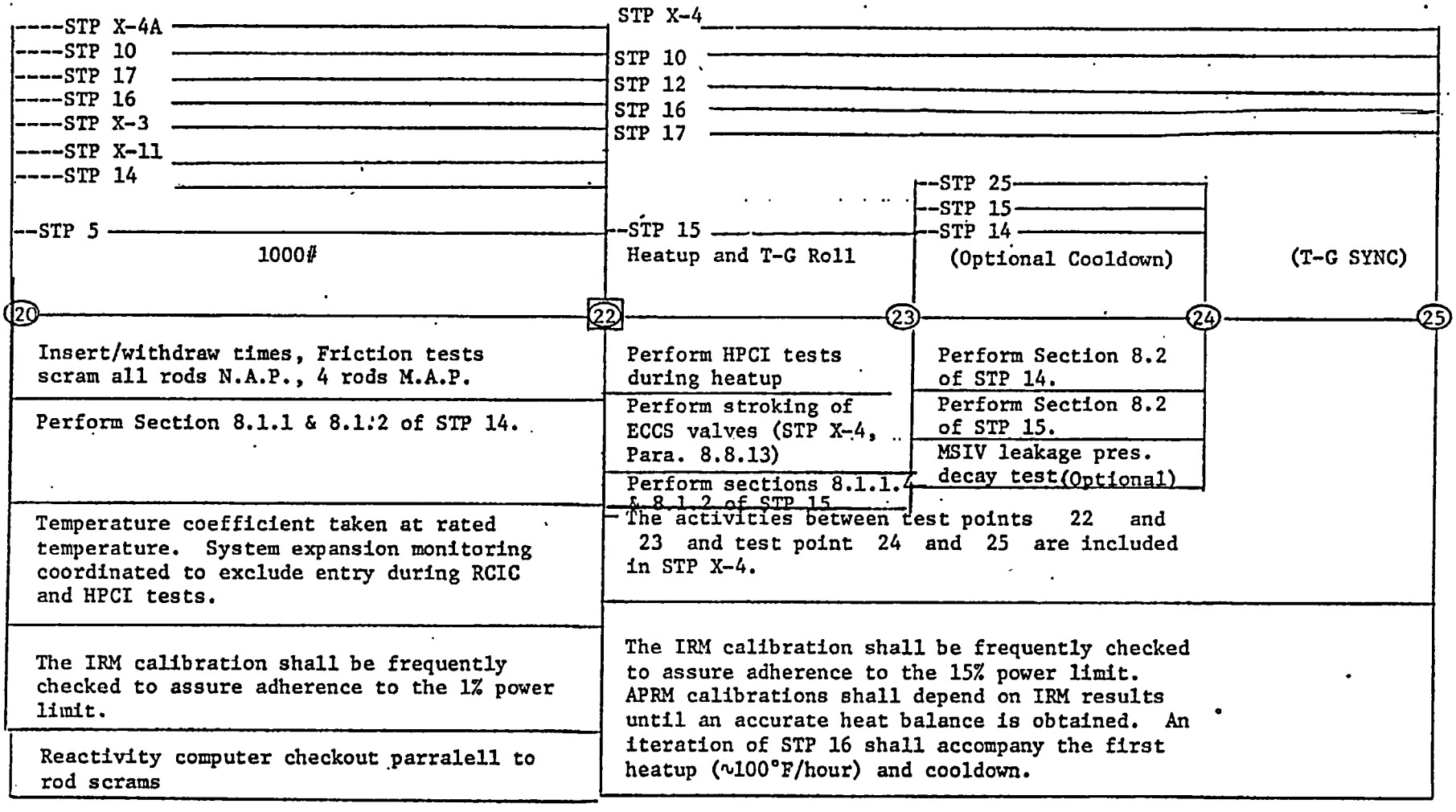
STP X-4A
STP 10
STP 17
STP 16
STP X-3
STP X-11
STP 14
STP 5
1000#
STP X-4
STP 10
STP 12
STP 16
STP 17
STP 15
Heatup and T-G Roll
STP 25
STP 15
STP 14
(Optional Cooldown)
(T-G SYNC)
20
22
23
24
25
Insert/withdraw times, Friction tests scram all rods N.A.P., 4 rods M.A.P.
Perform Section 8.1.1 & 8.1.2 of STP 14.
Temperature coefficient taken at rated temperature. System expansion monitoring coordinated to exclude entry during RCIC and HPCI tests.
The IRM calibration shall be frequently checked to assure adherence to the 1% power limit.
Reactivity computer checkout parralell to rod scrams
Perform HPCI tests during heatup
Perform stroking of ECCS valves (STP X-4, Para. 8.8.13)
Perform sections 8.1.1.4 & 8.1.2 of STP 15
Perform Section 8.2 of STP 14.
Perform Section 8.2 of STP 15.
MSIV leakage pres. decay test(Optional)
The activities between test points 22 and 23 and test point 24 and 25 are included in STP X-4.
The IRM calibration shall be frequently checked to assure adherence to the 15% power limit. APRM calibrations shall depend on IRM results until an accurate heat balance is obtained. An iteration of STP 16 shall accompany the first heatup (~100°F/hour) and cooldown.

# PHASE FOUR -LOW POWER TESTING

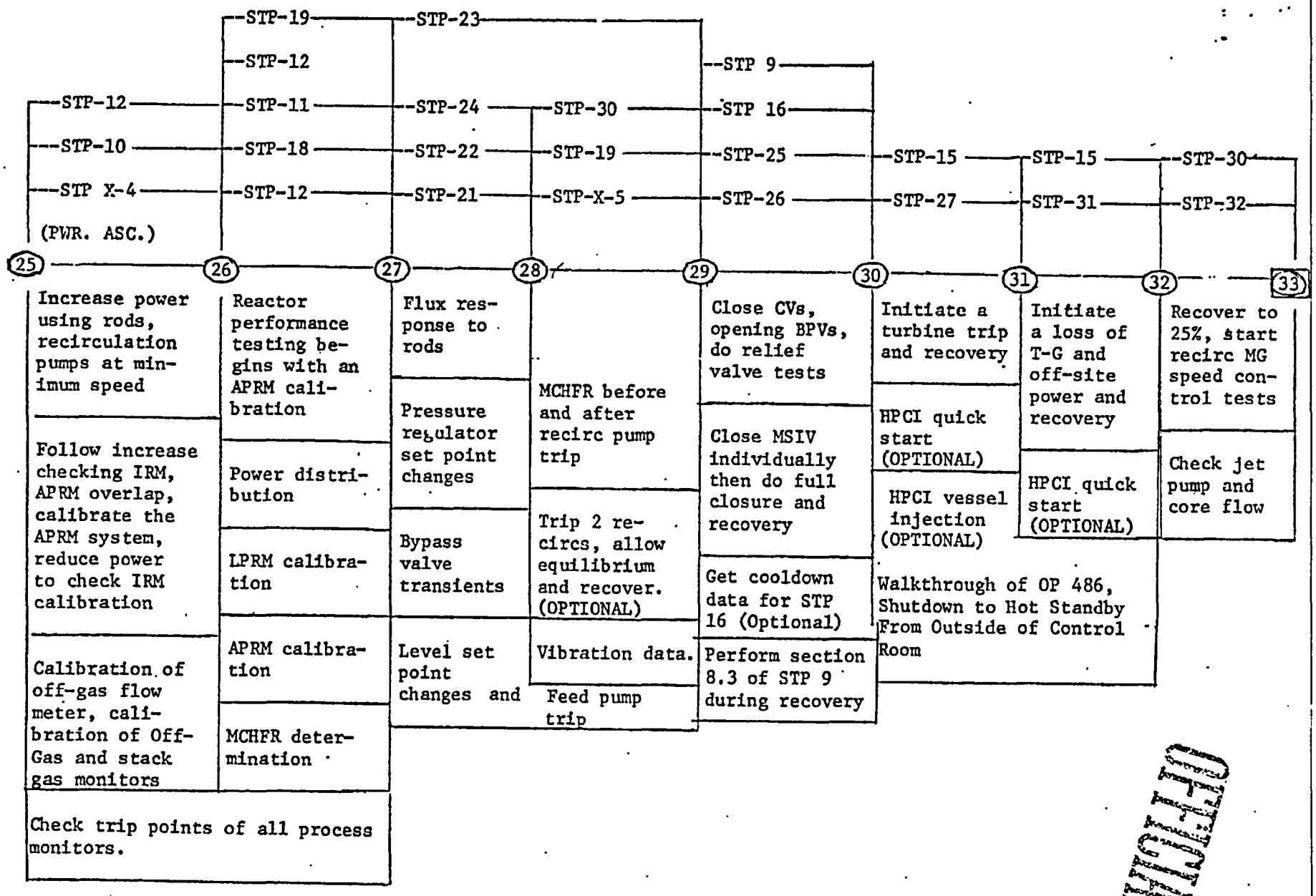


ORIGINAL

# PHASE FOUR - LOW INTERMEDIATE POWER TESTING

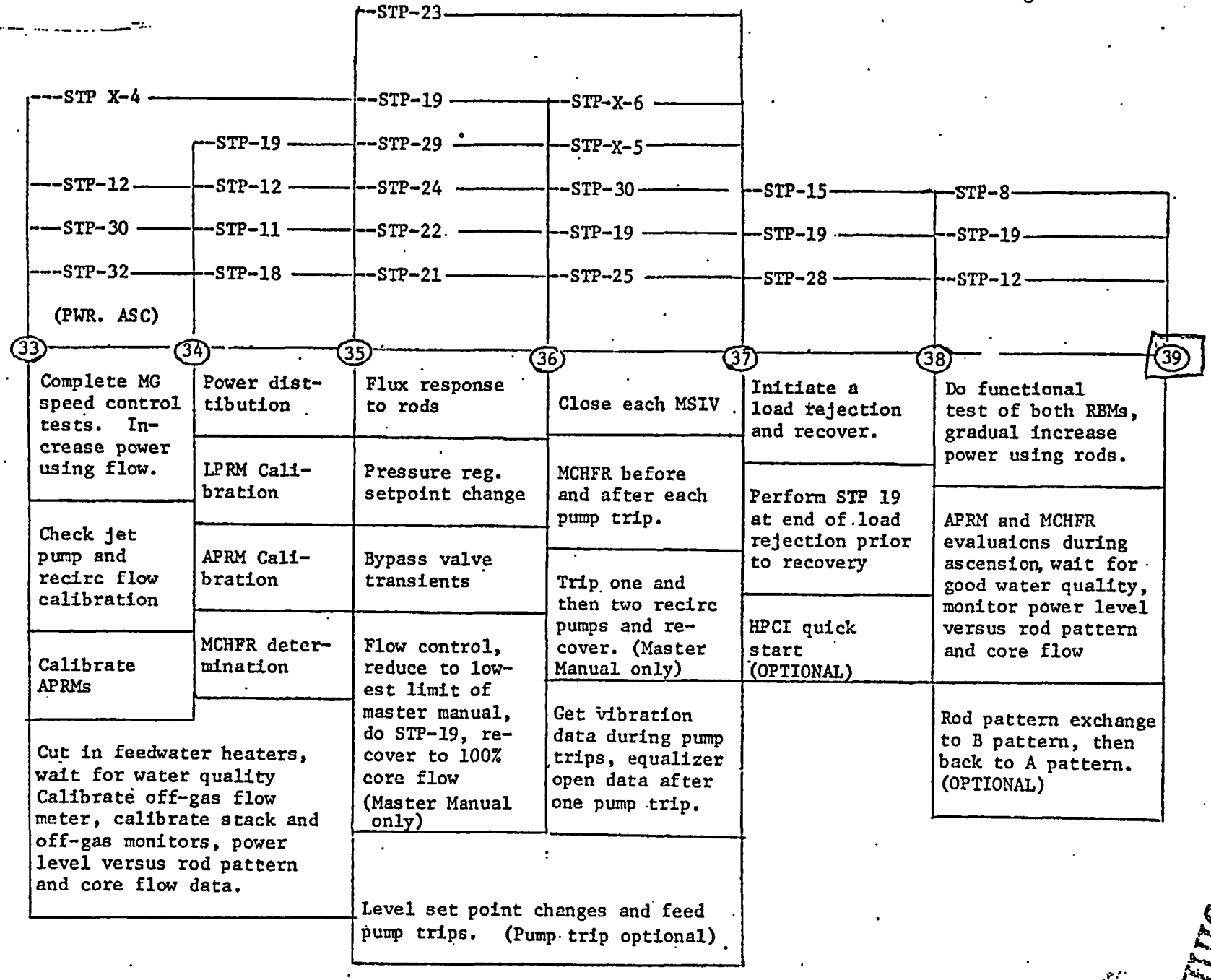


CONFIDENTIAL

PHASE FOUR - HIGH INTERMEDIATE POWER TESTING

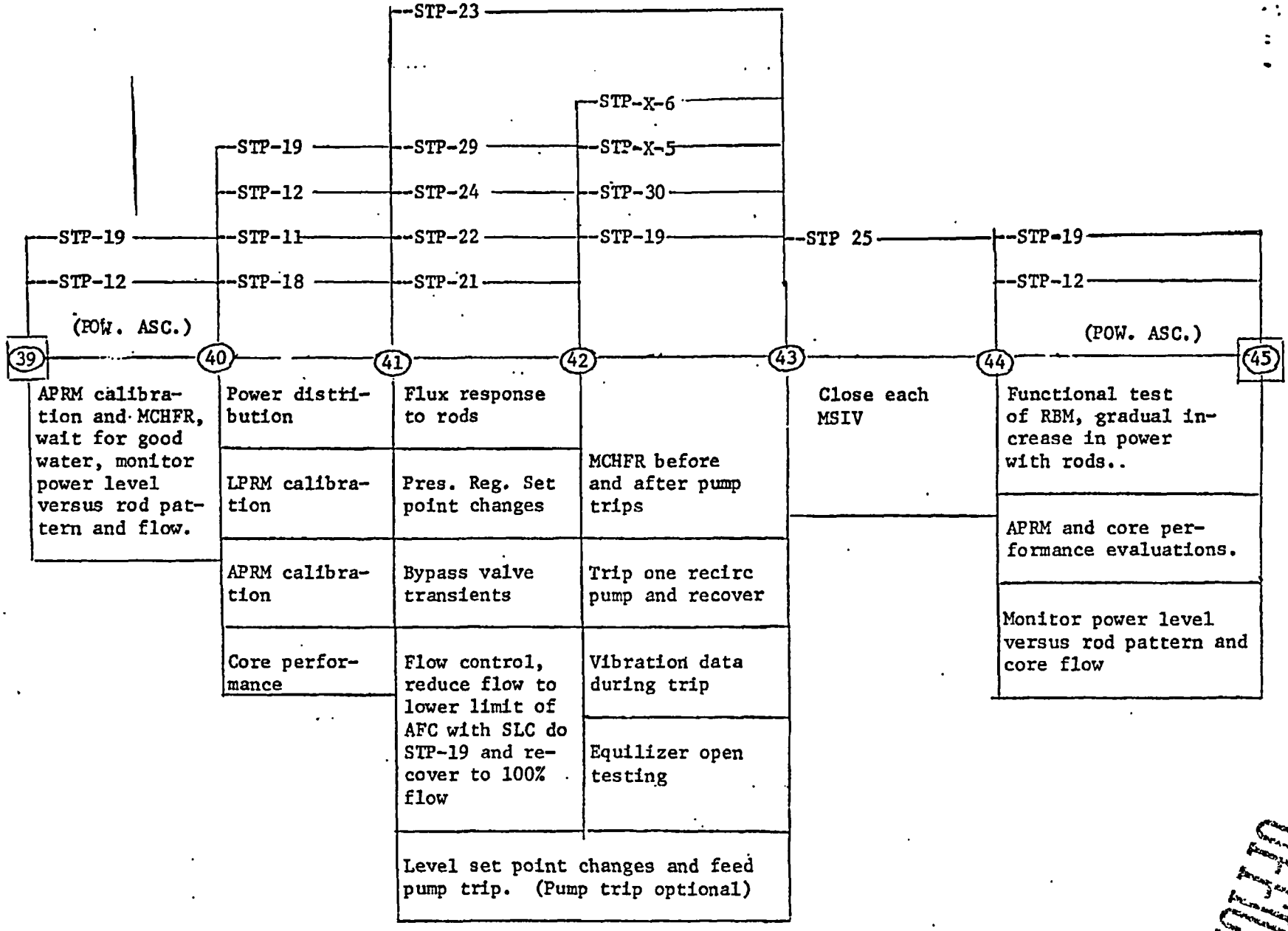


ORIGINAL

PHASE FOUR - HIGH POWER ASCENSION

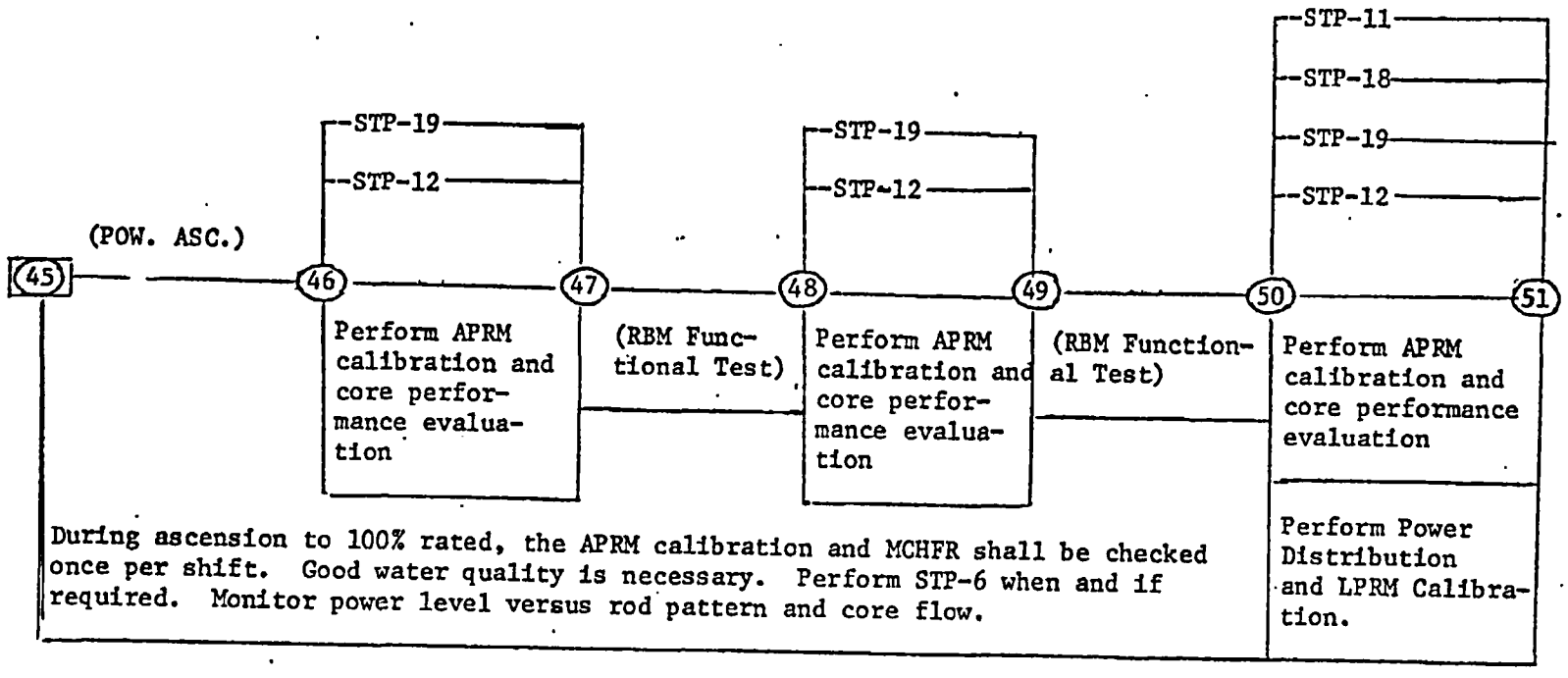


DRAFT

PHASE FOUR - HIGH POWER TESTING

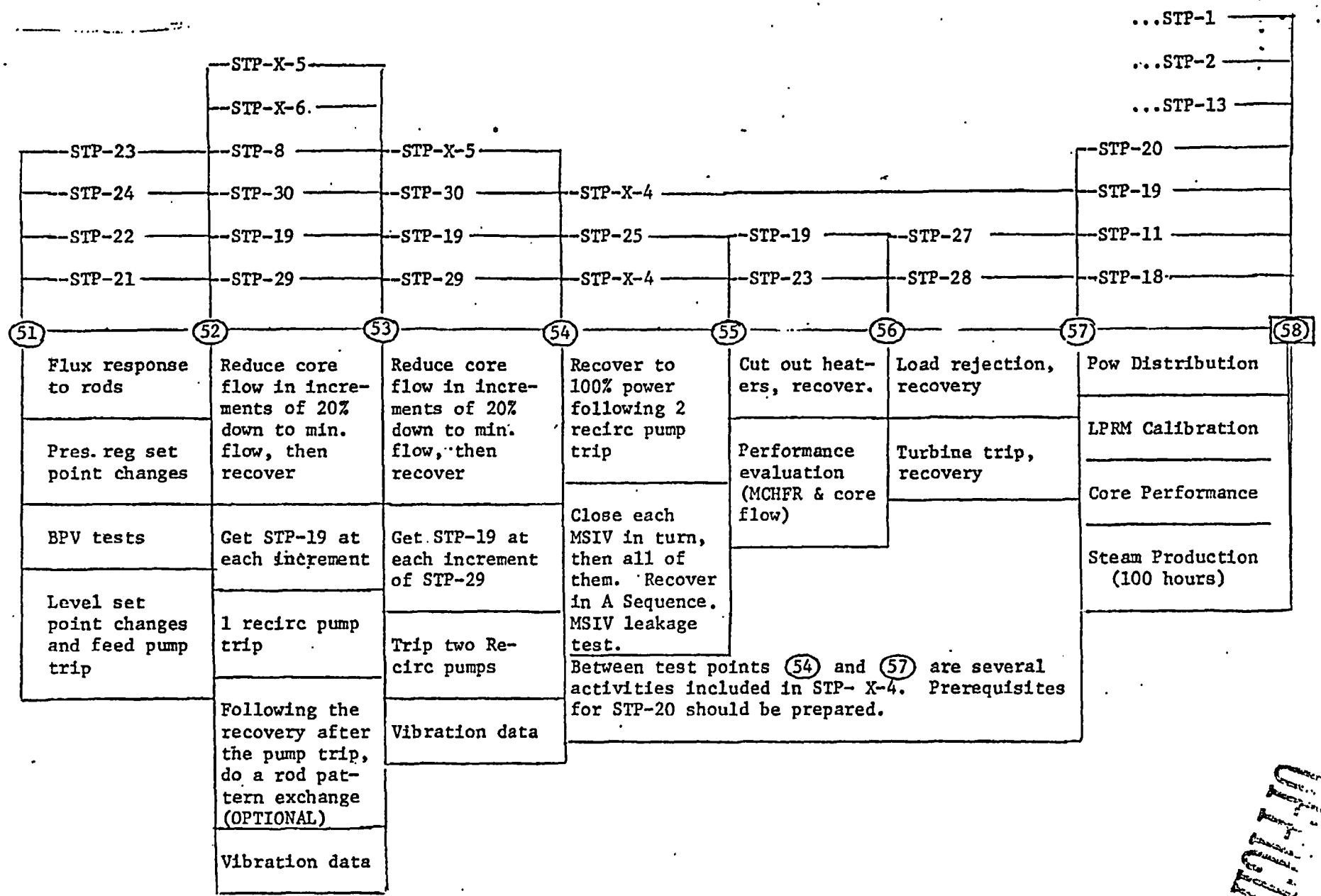

Attachment 2

Vermont Yankee Nuclear Power Station

Proposed Technical Specification Change No. 263 – Supplement No. 19

Extended Power Uprate – Initial Plant Test Program

Historical Records and Justifications

Total number of pages in Attachment 2
(excluding this cover sheet) is 20.

## HISTORICAL RECORDS AND ADDITIONAL JUSTIFICATION FOR PROPOSED EPU POWER ASCENSION TESTING

By letter dated May 2, 1974, Vermont Yankee Nuclear Power Corporation (VY) submitted a Startup Test Report to the U.S. Atomic Energy Commission (AEC). The report contained the results of the startup tests performed at the Vermont Yankee Nuclear Power Station (VYNPS) through 75% of original licensed thermal power (OLTP). As noted therein, startup testing was suspended at 75% power due to fuel hydriding effects and a resultant increases in off-gas release rates. The results of testing above 75% power were not formally reported to the AEC (NRC). As noted in the May 2, 1974 report, VY's Joint Test Group with responsibility for initial startup testing was dissolved in July 1973. Subsequent tests were conducted either in accordance with startup test procedures or plant procedures. Those tests that constitute routine surveillances (e.g., LPRM calibration) continue to be performed in accordance with operating plant procedures. Startup testing at 100% power was subsequently performed, and the full power warranty run was completed in February 1975.

Because VY did not submit a final Startup Test Report to the AEC (NRC) to document initial startup testing at the 100% power level, this submittal provides historical information regarding initial plant testing conducted at ≥ 80%[1] OLTP, but not planned for the extended power uprate (EPU) of VYNPS. Additional justification for not performing EPU power ascension is also provided to supplement justifications previously submitted[2]. Table 1 is a comparison of the power ascension tests that were scheduled[3] to be performed during initial startup testing at power levels ≥ 80% of OLTP level vs. those planned for EPU testing.

---

[1] For the purpose of comparing proposed EPU testing to the initial plant startup test program, draft Standard Review Plan 14.2.1, "Generic Guidelines for Extended Power Uprate Testing Programs," in Section III.A.1 uses a power level of equal to or greater than 80 percent of the original licensed thermal power level.

[2] Entergy's letter to NRC dated October 28, 2003, BVY 03-98, provided a complete update to Attachments 3 and 7 of the September 10, 2003 submittal.

[3] Based on Vermont Yankee Nuclear Power Station Startup Test Procedure No. 0 (STP-0), "Startup Test Schedule," Revision 2, through Change No. 5 (July 15, 1973). GE Startup Specification 22A2217, Rev. 1, January 5, 1973, originally included STP-5, "Control Rod Drive System," STP-26, "Relief Valves," and STP-31, "Loss of Turbine-Generator and Offsite Power," as startup tests to be performed at 100% power.

**Table 1**
**Initial Startup Testing at High Power vs. EPU Testing**

| STP[4] No. | Title | Test planned for EPU[5] |
|---|---|---|
| 1 | Chemical and Radiochemical | Yes |
| 2 | Radiation Measurement | Yes |
| 11 | LPRM Calibration | No |
| 12 | APRM Calibration | Yes |
| 13 | Process Computer | No |
| 18 | Power Distribution | No |
| 19 | Core Performance | Yes |
| 20 | Steam Production | No |
| 21 | Flux Response to Rods | No |
| 22 | Pressure Regulator | Yes |
| 23 | Feedwater System | Yes |
| 24 | Bypass Valves | Yes |
| 25 | Main Steam Isolation Valves | No |
| 27 | Turbine Trip | No |
| 28 | Generator Trip | No |
| 29 | Recirculation Flow Control | No |
| 30 | Recirculation System | No |
| X-5 (90) | Vibration Testing | No |

Entergy's submittal of October 28, 2003 (BVY 03-98) provided an updated Attachment 3 (Modifications and Testing) and Attachment 7 (Justification for Exception to Large Transient Testing) of the September 10, 2003, application for a license amendment for extended power uprate. The following information supplements and expands upon the information provided previously regarding the eleven startup tests identified in Table 1 that will not be entirely re-performed as part of power ascension testing.

Historical records and further justification for not re-performing some of the startup tests identified in Table 1 are summarized in Table 2 below.

[4] Startup Test Procedure (based on VYNPS STP-0)
[5] For those tests where no special EPU power ascension test is planned, the structure, system or component may still be subject to periodic testing in accordance with Technical Specifications or plant procedures as discussed in Table 2.

**Table 2**
**Historical Records of VYNPS Initial Startup Testing and Additional Justifications**

| STP No. | Historical Records and Justification for not performing EPU Testing |
|---|---|
| 11 | STP-11 Title: LPRM Calibration |
| | Test description derived from UFSAR Section 13.5 (subsections 13.5.2, 13.5.3 and 13.5.4):<br><br>LPRM calibrations, which included use of the traversing in-core probe (TIP) subsystem, were made at 50%, 75%, and 100% of rated power. Each local power range monitor was calibrated to read in terms of local fuel rod surface heat flux. |
| | Historical STP-11 LPRM calibration at 100% power:<br><br>The Plant Operations Review Committee (PORC) reviewed the results of STP-11 on June 14, 1974, and determined that the test was satisfactorily completed in accordance with the criteria defined in the procedure. |
| | Entergy's EPU letter of October 28, 2003 (BVY 03-098):<br><br>LPRM calibration is performed at a frequency specified in the Technical Specifications (Table 4.1.2) using approved plant procedures. The method and approach used to perform LPRM calibration is not affected by a constant pressure power uprate (CPPU). Meeting the Technical Specifications requirements is sufficient to demonstrate the adequacy of LPRM performance characteristics. Therefore, this test is not required VYNPS EPU. |
| | Local flux changes under EPU conditions:<br><br>• The increase in local neutron and gamma flux due to EPU does not exceed the design neutron and gamma flux ratings.<br>• The maximum flux experienced by an LPRM will remain approximately the same since the peak bundle powers will not appreciably increase. In addition, there is significant margin between the actual and specified maximum flux at the detector. |
| | Neutron flux noise under EPU conditions:<br><br>• The flux noise increases proportionally with power.<br>• Flux noise (in absolute power units) is proportional to flux, based on industry experience from other uprates. |

| STP No. | Historical Records and Justification for not performing EPU Testing |
|---|---|
| 11 | TIP Calibration Intervals:<br><br>• The current, pre-EPU flux-dependent TIP calibration intervals are adequate for EPU operation.<br>• The average core exposure of 2,000 MWD/T between Technical Specification required LPRM calibrations does not change. The time interval between calibrations will decrease. |
| | The difference in percent recirculation flow (ΔW) between two-loop operation (TLO) and single-loop operation (SLO) drive flow at the same core flow was evaluated for EPU with the following results:<br><br>• The current licensed thermal power ΔW value (with the application of ARTS/MELLLA) of 8% is not changed for EPU.<br>• For EPU, SLO operation is only permitted up to the same absolute power as for pre-EPU operation, so the SLO core and drive flows are the same.<br><br>Reference: Attachment 5 to Entergy's submittal of March 20, 2003 (BVY 03-23), NEDC-33089P, "Vermont Yankee Nuclear Power Station, APRM / RBM / Technical Specifications / Maximum Extended Load Line Limit Analysis (ARTS / MELLLA)," March 2003. |
| | Non-GE Supplied LPRMs:<br><br>LPRM detectors supplied by other vendors must meet all the design specifications of the GE supplied detectors. However, VYNPS currently has only GE supplied detectors. The application for EPU does not preclude the installation of non-GE supplied detectors if the non-GE detectors have equal to or better performance specifications than GE supplied detectors. |
| | LPRM/APRM Signals Calibration:<br><br>• The average flux across the core increases by about the same proportion as the power.<br>• The maximum flux experienced by an LPRM will remain approximately the same.<br>• For EPU operation the APRM channels must be recalibrated and their related trip and alarm functions tested. The recalibration of the APRM channels is required to re-span the channels such that 100% indication is equivalent to the new EPU licensed power level.<br>• The calibration of the LPRM channels for EPU operation is performed at the same average core exposure as pre-EPU operation (i.e., via TIP scan every 2,000 MWD/T core average exposure). However, since the exposure rate will |

| STP No. | Historical Records and Justification for not performing EPU Testing |
|---|---|
| 11 | be ~20% higher, corresponding to a ~20% increase in flux, the time interval between calibrations will be reduced by ~20%.<br>• The EPU limits for all fixed APRM scram setpoints and limits for all fixed rod block setpoints in terms of percent rated thermal power remain unchanged.<br>• The VYNPS plant procedures associated with LPRM calibration and lifetime management are:<br>o OP 4406 LPRM Calibration and Functional Check<br>o OP 4407 LPRM Lifetime Management<br><br>Reference: GE Nuclear Energy, "Generic Guidelines for General Electric Boiling Water Reactor Extended Power Uprate," Licensing Topical Reports NEDC-32424P-A, Class III (Proprietary), February 1999; and NEDO-32424, Class I (Non-Proprietary), April 1995 (ELTR1). |
| | APRM Flow Control Trip Reference (FCTR) Cards:<br><br>The application of the APRM flow-biased setpoints for ARTS/MELLLA required the installation of digital FCTR cards in each of the APRM channels. Since the APRM scram and rod-block setpoints are revised for the application of EPU, new software to implement the revised APRM setpoints (via replacement EPROMs) will be required. The digital FCTR cards do not require replacement for EPU.<br><br>Reference: NEDC-33089P, "Vermont Yankee Nuclear Power Station, APRM/RBM/Technical Specifications / Maximum Extended Load Line Limit Analysis (ARTS/MELLLA)," March 2003. |
| | Recirculation Flow Evaluation:<br><br>• Maximum core flow does not change for EPU.<br>• The slight increase in recirculation pump loop flow per loop (to get the same core flow) has a negligible effect on the APRM flow-biased trip margin determinations after flow calibration.<br>• Bi-stable flow characteristics do not change due to EPU.<br>• Recirculation flow is adequate, without modification, for operation at EPU conditions. |

| STP No. | Historical Records and Justification for not performing EPU Testing |
|---|---|
| 11 | Historical LPRM Calibrations:<br><br>The following are early, historical LPRM calibrations (sample only)<br><br>LPRM CALIBRATION # / Date / Rx Power<br><br>LPRM CALIBRATION #10 19730115 98%<br>LPRM CALIBRATION #14 19730417 79%<br>LPRM CALIBRATION #16 19730503 78%<br>LPRM CALIBRATION #18 19730617 78.8%<br>LPRM CALIBRATION #30 19740107 60%<br>LPRM CALIBRATION #31 19740110 64%<br>LPRM CALIBRATION #32 19740114 88.8%<br>LPRM CALIBRATION #33 19740117 90.8%<br>LPRM CALIBRATION #34 19740201 96.7%<br>LPRM CALIBRATION #35 19740215 95%<br>LPRM CALIBRATION #36 19740308 91%<br>LPRM CALIBRATION #61 19750108 99%<br>LPRM CALIBRATION #62 19750117 99.8%<br>LPRM CALIBRATION #63 19750121 99.8%<br>LPRM CALIBRATION #64 19750126 99.6%<br>LPRM CALIBRATION #65 19750205 99.7% |
| | EPU Conclusion:<br><br>The calibration of LPRMs is not affected by EPU. The Technical Specification surveillance maintains the calibration of LPRMs. Therefore, this test is not required. |
| 13 | STP-13 Title: Process Computer: |
| | As station process variable signals became available to the computer, verification was made of these signals and of the computerized system performance calculations.<br><br>Process computer functions were verified as sensed variables came into range during the ascension to and at rated power. |
| | Test description derived from UFSAR section 13.5 (subsections 13.5.2, 13.5.3 and 13.5.4):<br><br>The central processor performs various calculations, makes necessary interpretations, and provides for general input/output (I/O) device control and buffered transmission between I/O devices and memory. To ensure data |

| STP No. | Historical Records and Justification for not performing EPU Testing |
|---|---|
| 13 | integrity, the computer system has built-in testing checks and diagnostic facilities, such as parity, error detection, correction in the processor, memories, and the system bus, and automatic self-test at power-up. Real-time processing capability is provided with battery backup to facilitate a rapid restart without loss of memory or loss of processor clock time. |
| | Process Computer Administrative Controls:<br><br>The Process Computer is controlled by the following VY Plant procedures:<br><br>• OP 452 Process Computer Updating<br>• OP 2451 ERFIS Process Computer Startup and Shutdown<br>• OP 5399 I/C Calibration of Important Computer Analog Inputs<br>• OP 5401 Data Shuffling and Data Checks for Process Computer at BOC<br>• RP 2454 Emergency Response Data System Operation |
| | Historical STP-13 results at 100% power:<br><br>The PORC reviewed the results of the STP-13 on June 27, 1975 and determined that the test was satisfactorily completed in accordance with the criteria defined in STP-13. |
| | Process Computer Software Upgrades<br><br>The plant process computer software upgrades are performed in accordance with procedure ENN-IT-104, "Software Quality Assurance Program," and any changes made to software which perform the following functions are properly reviewed, approved and documented by computer engineering.<br><br>• Core thermal hydraulic and stability calculations (3D Monicore & Solomon)<br>• Rod Worth Minimizer (RWM)<br>• Safety Parameter Display System (SPDS)<br>• Isolation between safety related inputs and non safety related process computer equipment<br>• Uninterruptible Power Supply (UPS) |
| | Process Computer Point Re-spanning for EPU:<br><br>Minor Modification 2003-039, "NSSS/BOP Instrumentation Upgrades for EPU," was developed to identify and compensate the necessary process computer points affected by EPU. In this modification the following process computer points are re-spanned:<br><br>• B015 Feedwater Flow A |

| STP No. | Historical Records and Justification for not performing EPU Testing |
|---|---|
| 13 | • B016 Feedwater Flow B<br>• B022 Total Steam Flow<br>• B064 Steam Flow A<br>• B065 Steam Flow B<br>• B066 Steam Flow C<br>• B067 Steam Flow D |
| | EPU Conclusion:<br><br>Operation of the process computer is not affected by EPU, and plant procedures maintain the accuracy of the process computer. Therefore, this test is not required. |
| 18 | STP-18 Title: Power Distribution |
| | Test description derived from UFSAR section 13.5 (subsections 13.5.2, 13.5.3 And 13.5.4):<br><br>LPRM calibrations, which included use of the traversing in-core probe (TIP), were made at 50%, 75%, and 100% of rated power. Each local power range monitor was calibrated to read in terms of local fuel rod surface heat flux.<br><br>Axial power distribution measurements were made with the TIP System after significant changes in power, control rod pattern, or flow rate. The TIP data were used for core performance evaluations and LPRM calibrations. |
| | Historical STP-18 at 100% Pre-operational Testing Review in 1974:<br><br>The PORC reviewed the results of STP-18 on June 14, 1974, and determined that the test was satisfactorily completed in accordance with the criteria defined in the procedure. |
| | EPU Conclusion:<br><br>LPRM calibration is performed at a frequency specified in the Technical Specifications using approved plant procedures. The method and approach used to perform LPRM calibration is not affected by CPPU. This test is not required. |
| 20 | STP-20 Title: Steam Production |
| | Test Report for TP 75-01 (STP-20) Steam Production--Reactor Power Level 99.8% (report dated April 11, 1975): |

| STP No. | Historical Records and Justification for not performing EPU Testing |
|---|---|
| 20 | Purpose:<br><br>To demonstrate that the nuclear steam supply and turbine-generator systems meet the specifications of all performance warranties.<br><br>• The nuclear steam supply system output warranty was demonstrated by a system performance test of 100 hours of continuous operation at the warranted steam output. The process computer was utilized to calculate core thermal power and steam flow at 15 minute intervals throughout the test period while gross generation was determined from KWH metering in a manner to obtain the integrated KWHe for the 100 hour duration.<br>• At selected intervals during the 100 hour run, test runs of 4 hour duration were performed to provide a manual check of the process computer calculations.<br>• Steam quality was determined by injecting $Na_2SO_4$ into the reactor water and utilizing the ratio of $Na_2SO_4$ activity of the steam to the $Na_2SO_4$ activity of the reactor water.<br>• The steam pressure at the second isolation valve was determined prior to the 100 hour performance test to ensure that steam quality met its minimum state point requirements.<br><br>Results:<br><br>The average gross plant heat rate for each four hour test run was calculated by using data collected from the process computer and by manual means. The 100-hour calculated values met the specifications of all performance warranties. Calculations derived from data taken during the selected 4-hour test runs show a close correspondence when compared with values calculated by the process computer during the same time span. |
| | Vermont Yankee Design Change (VYDC) 2003-006, "HP Turbine Replacement":<br><br>The installation and testing acceptance criteria in this VYDC require demonstration of steam production and turbine performance to verify the warranty. |
| | EPU Conclusion:<br><br>This test was only applicable for initial plant startup to demonstrate warranted capabilities; therefore, this test is not required for EPU. |

| STP No. | Historical Records and Justification for not performing EPU Testing |
|---|---|
| 21 | STP-21 Title: Response to Control Rod Motion |
| | Test description derived from UFSAR section 13.5 (subsections 13.5.2, 13.5.3 and 13.5.4):<br><br>Flux responses to control rod movements were determined in both equilibrium and transient conditions. Steady-state noise was measured if possible. Power-void loop stability was verified from these data. |
| | The initial plant startup test was performed at 17% and 52% OLTP power. Operation at CPPU increases the upper end of the power operating domain. These changes in the higher end do not significantly or directly affect the manner of operating or response of the reactor at these lower power levels. Therefore, this startup test is not required. |
| | Historical STP-21 Flux Response to Rods Pre-operational Testing Review in 1974:<br><br>The PORC reviewed the results of STP-21 on June 14, 1974, and determined that the test was satisfactorily completed in accordance with the criteria defined in the procedure. |
| | EPU Conclusion:<br><br>Because operation at EPU increases the upper end of the power operating domain, these changes in the higher end do not significantly or directly affect the manner of operating or response of the reactor at lower power levels. Therefore, this test is not required. |
| 25 | STP-25 Title: Main Steam Isolation Valves |
| | Test description derived from UFSAR Section 13.5 (subsections 13.5.2, 13.5.3 and 13.5.4):<br><br>Main Steam Isolation Valve (MSIV) functional tests were made at rated pressure. MSIV functional and operational tests were made as reactor power was increased. |
| | Historical STP-25 Startup Test Report:<br><br>Purpose:<br><br>• To determine reactor transient behavior following the simultaneous full closure of all MSIVs. |

| STP No. | Historical Records and Justification for not performing EPU Testing |
|---|---|
| 25 | • To functionally check the MSIVs for proper operation at 100% power.<br>• To determine isolation valve closure times.<br><br>A partial closure of each MSIV was satisfactorily performed on January 21, 1974, at 91.5% power and again on January 24, 1974, at 98.5% power. For each test the slow closure pushbutton was released as soon as the valve indication showed an intermediate position. There were no observable changes to any reactor parameter. A functional test of MSIV-80A was performed on January 21, 1974, at 91.5% power. In this instance the slow closure pushbutton was not released until ten seconds after relays 43A and 43B de-energized. Reactor pressure increased sharply by 7.5 psi and caused corresponding changes in power level, vessel water level, feedwater level controller, turbine control valves, heat flux, and steam flow.<br><br>At 10:08 hours on February 23, 1974, all MSIVs were caused to shut by pulling fuses in the relay logic train. All valves began to close and a direct reactor scram was initiated within 0.8 seconds of the initiating signal from an initial reactor power level of 92.7%. The turbine, reactor feed pumps, and the steam jet air ejectors were manually tripped as soon as the isolation had been verified by station operators. Reactor pressure increased within 10 seconds to the relief valve setpoint and was maintained between 1,030 and 1,109 psig by automatic relief actuation.<br><br>Three distinct relief valve cycles were allowed to complete before station operators assumed manual control and reopened the isolation valves in accordance with established procedures.<br><br>Initial Test Program Conclusion:<br><br>• MSIV functional testing should be scheduled at power levels below 90% to avoid a pressure induced transient on the reactor.<br>• The test acceptance criteria which apply to reactor pressure were met in that pressure never exceeded a value of 1,104 psig during the full closure transient.<br>• Of additional significance is the fact that the lowest set main steam relief valve, RV2-7IB, did not operate automatically at its design setpoint of 1,080 psi.<br>• The acceptance criterion with regard to MSIV closure time (3-5 seconds) was met for all valves during the full closure transient. |
| | EPU Conclusion:<br><br>Each MSIV is tested at least once per quarter by tripping each valve and verifying the closure time (Technical Specification 4.7.D). As discussed in the "Justification for Exception to Large Transient Testing" in Reference 1, the initial startup test |

| STP No. | Historical Records and Justification for not performing EPU Testing |
|---|---|
| 25 | (involving the simultaneous closure of all MSIVs) would result in an unnecessary and undesirable transient cycle on the primary system. Performing the simultaneous full MSIV closure test will not likely reveal unforeseen equipment issues related to EPU operation. |
| 27 | STP-27 Title: Turbine Trip |
| | Test description derived from UFSAR section 13.5 (subsections 13.5.2, 13.5.3 and 13.5.4):<br><br>Turbine trip tests were performed to determine turbine speed and reactor response. |
| | Historical STP-27 Turbine Trip (as described in Startup Test Report (STR 27/1) dated January 24, 1974; test performed on January 24, 1974):<br><br>Purpose: To demonstrate the response of the reactor and its control systems to protective trips in the turbine.<br><br>Method: The turbine trip was initiated as a result of reactor vessel high water level which occurred during the performance of STP-23, "Feedwater Pump Trip."<br><br>Results:<br><br>• The test was conducted at 98% reactor power. The reactor scrammed and the bypass valves started to open within eight cycles after the turbine trip was initiated.<br>• Fourteen cycles after the turbine trip occurred, all turbine stop valves were closed. Approximately seven seconds after the scram, the MSIVs isolated on a high steam line flow signal.<br>• The reactor pressure reached a peak of 1,056 psig when the MSIVs closed. The relief valves were not opened until twenty seconds after the MSIV isolation at which time one of them was opened manually in order to maintain vessel pressure. The reactor vessel water level dropped from the high level trip setpoint of 50 inches to the low level scram setpoint of 5 inches, six seconds after the trip.<br><br>Conclusions:<br><br>• The acceptance criteria were met in that the safety valves did not open (reactor pressure did not exceed 1,056 psig—some 174 psig below the setpoint of the safety valves). |

| STP No. | Historical Records and Justification for not performing EPU Testing |
|---|---|
| 27 | Turbine Trip (final test at 100% power) - This large transient test and others (i.e., Generator Load Reject, MSIV Closure) are evaluated for exception from the EPU power ascension test program in an attachment to the October 28, 2003, licensing submittal (BVY 03-98).<br><br>Note: For large transient performance evaluation purposes, a turbine trip is equivalent to a generator load rejection (STP-28). Both transients isolate steam flow to the turbine, with only subtle differences due to the characteristics of the valves isolating flow. Whether a turbine trip or generator load rejection test is performed, the test results would be evaluated against the analysis for the specific event performed so that any differences would be taken into account. Part of the reason for the preference in the recommendation for a generator load rejection test in ELTR1 is that it is one of the transient events analyzed.<br><br>VYNPS also experienced the following load rejects which provided additional plant response data:<br><br>• On March 13, 1991, with reactor power at 100%, a reactor scram occurred as a result of turbine/generator trip on generator load rejection due to a 345 KV switchyard tie line differential fault. This event was reported to the NRC in LER 91-005, dated April 12, 1991.<br>• On June 15, 1991, during normal operation with reactor power at 100%, a reactor scram occurred due to a turbine control valve fast closure on generator load rejection resulting from a loss of the 345 KV north switchyard bus. This event was reported to the NRC in LER 91-014, dated July 15, 1991.<br><br>No significant anomalies were seen in the plant's response to these two events. |
| | EPU Conclusion:<br><br>This large transient test was evaluated for exception to testing (see Reference 1). Sufficient justification was provided to demonstrate that a turbine trip test is not necessary or prudent. Therefore, this test is not required. |
| 28 | STP-28 Title: Generator Trip |
| | Test description derived from UFSAR section 13.5 (subsections 13.5.2, 13.5.3 and 13.5.4):<br><br>Generator Trip: Generator trip tests were performed to determine speed and reactor response. |

| STP No. | Historical Records and Justification for not performing EPU Testing |
|---|---|
| 28 | Historical Startup Test Report for STP-28 at Reactor Power Level 93.7% (dated March 29, 1974):<br><br>Purpose:<br><br>To demonstrate the response of the reactor and its control systems (including bypass valve, relief valve, reactor protection and select rod insert systems) to protective trips in the generator.<br><br>The test was initiated by opening the generator output breakers 38IT and 379T and thus disconnecting the generator from the grid. The plant conditions prior to the start of this test were as follows:<br><br>• Reactor Power 93.7%<br>• Reactor Core Flow 47.3 x $10^6$ lb/hr<br>• Gross Generator Output 502 MWe<br>• Net Generator Output 472 MWe<br><br>Results:<br><br>• The load reject was sensed about 0.25 seconds after the 379T breaker was opened, causing the 12 rods on the Select Rod Insert bus to scram and reactor power to decrease to 46%. The control valves started to close and the bypass valves simultaneously started to open about 0.02 seconds after reject had been sensed. The bypass valve cam opened to 95% within 1.5 seconds indicating that #10 bypass valve was halfway open. The TREST trace indicated approximately 1/2 of the bypass valve position visually observed at the time; this discrepancy was caused by a TREST recorder gradient error.<br>• Turbine speed increased to a maximum of 1,960 rpm in approximately 1.5 to 2.0 seconds after the trip was initiated and then coasted back to between 1,905 and 1,910 rpm. During the overspeed transient, generator voltage increased to a maximum of 4.7% above its initial value and the voltage regulator showed good stability.<br>• The combined movement of control and bypass valves caused an initial increase in turbine inlet pressure; the reactor pressure decreased immediately from 1002 psig and reached a value of 960 psig about 12 seconds after the breaker trip.<br>• As a result of the Select Rod Insert, reactor power decreased from 93.7% to 50.7% within approximately 1.5 second. The power level then followed the core flow transient and reached a low of 46% approximately six seconds after the breaker trip. Reactor power then increased to 75% within 27 seconds after the trip was initiated. The APRM setdown was verified to occur 28 seconds after the 379T breaker was opened. The APRM setdown had no effect on the transient since the Select Rod Insert decreased power sufficiently. |

| STP No. | Historical Records and Justification for not performing EPU Testing |
|---|---|
| 28 | • The generator continued to support station loads for a total time of 38.5 seconds. At that time a turbine trip occurred which necessitated a manual reactor scram. The cause of the trip could not be positively ascertained because of a loss of the process computer at the time of the turbine trip. Examination of the post-trip chart recorders resulted in the conclusion that a reactor high water level signal was responsible. The generator overspeed condition caused feedwater flow to increase to a peak value of $7.2 \times 10^6$ lbs/hr. Feedwater flow then decreased to approximately $6.6 \times 10^6$ lbs/hr and remained at that rate for 13 seconds.<br>• Reactor water level decreased 5" during the transient and stabilized to a level 2" below its initial value during the 13 seconds of high feed flow. At the time the turbine tripped, water level indicated 45" by TREST trace indication and reached a peak of 47" approximately four (4) seconds after the trip. The control room GEMAC recorder indicated 51" at a time corresponding to the turbine trip. A close linear correspondence exists between the Yarways, which cause protective trips to be generated, and the GEMAC indicator. Based on the above information, the turbine trip is believed to have been caused by a reactor high water level signal.<br><br>Test Conclusion:<br><br>• All system parameters, with the exception of feed flow and vessel level, followed a classical trend for a generator load rejection from a 100% power condition. The feedwater level control system failed to respond rapidly to an increasing reactor water level. The feedwater system time response should be optimized to provide adequate response to prevent a high water level trip during a generator load reject transient.<br>• Based on the data acquired during the 39-second period following the trip, the load reject transient meets all stated acceptance criteria and is thus considered satisfactory. |
| | EPU Conclusion:<br><br>Generator Load Rejection: This large transient test and others (i.e., Turbine Trip, MSIV Closure) were evaluated for exception from EPU power ascension testing in Attachment 7 to Entergy's letter to NRC of October 28, 2003, (BVY 03-98). |
| 29 | STP-29 Title: Recirculation Flow Control |
| | Test description derived from UFSAR section 13.5 (subsections 13.5.2, 13.5.3 and 13.5.4):<br><br>Flow control capabilities were determined at specified power levels. |

| STP No. | Historical Records and Justification for not performing EPU Testing |
|---|---|
| 29 | Historical STP-29 (test report dated June 26, 1975)<br><br>The PORC reviewed the results of STP-29 on July 23, 1975, and determined that the test was satisfactorily completed in accordance with the criteria defined in STP-29.<br><br>Purpose: To determine plant response to recirculation flow and plant load-following capability.<br><br>• This was the third and final iteration of STP-29 which consisted of a single, approximately 8%, abrupt flow change and a single step/ramp combination flow change of 23%. The 8% change was performed at 91% power and 87% flow and was executed in the master manual mode. The step/ramp combination was executed from 91% power and 88% flow to 84% power and 76% flow for the step portion, then a ramp to 78% power and 69% flow. For the step/ramp combination, the flow controller was set to the master manual mode. The above process was repeated in the reverse direction for both the 8% and 23% flow changes.<br>• Process variables that were expected to respond transiently were monitored with the TREST. As in previous iterations of this test, traces produced were checked to assure that parameters which responded to the changes in an oscillatory manner were adequately damped. Power/flow data obtained were plotted against the previously calculated power-flow map 100% power rod line<br><br>Results:<br><br>• The comparison of transient curves against the criteria defined in the procedure indicated that the monitored process variables that exhibited oscillatory response to flow control had decay ratios less than or equal to 0.25. The step and ramp power changes conform to expected characteristic performance of the system. The power vs. flow information plotted on the power-flow map conforms to the calculated values.<br>• The steam dome and turbine inlet steam pressures vs. reactor power curves were not plotted. This was due to the method of data collection which did not assure that the pressure regulator setting was constant for a given power flow line and did not assure that the monitored parameters of interest were consistent throughout the several test iterations. This fact does not invalidate the successful completion of the test since the actual completion of the curves would have provided primarily historical information.<br><br>Conclusion:<br><br>• The system did not exhibit any instability at the 100% power testing plateau. This iteration of recirculation flow control and the resulting plant stable response adequately demonstrates the plant's load-following capability. |

| STP No. | Historical Records and Justification for not performing EPU Testing |
|---|---|
| 29 | Flow Change Testing:<br><br>Section 3.6 of the Constant Pressure Power Uprate Licensing Topical Report (CLTR) (GE Nuclear Energy, "Constant Pressure Power Uprate," Licensing Topical Report NEDC-33004P-A (Proprietary), July 2003, and NEDO-33004-A (Non-Proprietary), July 2003) indicates that a constant pressure power uprate that increases voids in the core during normal uprate power operations requires a slight increase in recirculation drive flow to achieve the same core flow. |
| | EPU Conclusion:<br><br>Section 3.6 of the VYNPS Power Uprate Safety Analysis Report (PUSAR) (submitted as Attachment 4 (Proprietary) and Attachment 6 (Non-Proprietary) to Entergy's application dated September 10, 2003 (BVY 03-80)) documents that the plant-specific system evaluation of the reactor recirculation system performance at CPPU power determined that adequate core flow can be maintained without requiring any changes to the recirculation system and with only a small increase in pump speed for the same core flow. Because the response to flow changes will be similar to that demonstrated during initial startup testing, this testing is therefore not required. |
| 30 | STP-30 Title: Recirculation System |
| | Test description derived from UFSAR section 13.5 (subsections 13.5.2, 13.5.3 and 13.5.4):<br><br>Recirculation System: Recirculation pump trips and their effects on the jet pumps and the reactor were tested periodically during power increase. |
| | Historical review of STP-30 test results at 100% power:<br><br>The PORC reviewed the results of STP-30 on April 17, 1975 and determined that the test was satisfactorily completed in accordance with the criteria defined in STP-30.<br><br>STP-30, "Recirculation System," was conducted to accomplish the following:<br><br>1. Evaluate the recirculation flow and power level transients following trips of one or both of the recirculation pumps.<br><br>2. Calibrate the jet pump flow instrumentation; determine reactor core flow and jet pump flow consistency.<br><br>3. Measure the reactor core flow by performing mass and energy balances on the reactor downcomer. |

| STP No. | Historical Records and Justification for not performing EPU Testing |
|---|---|
| 30 | EPU RAI:<br><br>In the response to RAI EMCB-B-1 in Entergy's letter to NRC dated March 4, 2004, (BVY 04-025), it was noted that there is no significant change in temperature, pressure and flow rate for the reactor recirculation (RR) piping system resulting from CPPU. The RR operating temperature will decrease slightly (by less than one percent); the operating pressure changes by less than one percent (RR pump suction pressure decreases by less than one percent, and RR pump discharge pressure increases by less than one percent). The RR flow rate increases slightly (by less than two percent). |
| | EPU Evaluation and Conclusion:<br><br>One Pump Trip (Final Test At 100% Power) – CLTR Section 3.6 indicates a CPPU that increases voids in the core during normal uprate power operations requires a slight increase in recirculation drive flow to achieve the same core flow. Section 3.6 of the PUSAR documents that the plant-specific system evaluation of the reactor recirculation system performance at CPPU power determines that adequate core flow can be maintained without requiring any changes to the recirculation system/pumps and with only a small increase in their speed for the same core flow. The response to a one pump trip will be similar to that of original startup testing. Therefore, this testing is not required.<br><br>Two Pump Trip (Final Test At 100% Power) – Section 3.6 of the PUSAR indicates a CPPU that increases voids in the core during normal uprate power operations requires a slight increase in recirculation drive flow to achieve the same core flow. Section 3.6 of the PUSAR documents that the plant-specific system evaluation of the reactor recirculation system performance at CPPU power determines that adequate core flow can be maintained without requiring any changes to the recirculation system/pumps and with only a small increase in their speed for the same core flow. The response to a trip of both pumps will be similar to that of original startup testing. Therefore, this testing is not required. |
| X-5 (90) | STP X-5 Title: Vibration Testing: |
| | Test description derived from UFSAR section 13.5 (subsections 13.5.2, 13.5.3 and 13.5.4):<br><br>Vibration measurements at cold flow conditions were performed as necessary to determine the vibrational characteristics of reactor vessel internals of Vermont Yankee design. The results of extensive vibration measurements made at other BWR installations were considered in selecting the components to be tested if it should be required. |

| STP No. | Historical Records and Justification for not performing EPU Testing |
|---|---|
| X-5 | Vibration measurements were performed as necessary. |
| | PUSAR Section 3.4, Flow Induced Vibration:<br><br>The flow-induced vibration evaluation addresses the influence of an increase in flow during CPPU on reactor pressure vessel internals in PUSAR section 3.4.2, "Structural Evaluation," for core flow dependent reactor pressure vessel internals. The results include:<br><br>• The calculations for CPPU conditions indicate that vibrations of all safety-related reactor internal components are within the GE acceptance criteria.<br>• There is only a slight increase (1.9%) in maximum drive flow at CPPU condition for VYNPS as compared to CLTP.<br>• The results of the vibration evaluation show that continuous operation at a reactor power of 1912 MWt and 107% of rated core flow does not result in any detrimental effects on the safety related reactor internal components. |
| | Historical testing at 100% power:<br><br>A summary report of reactor vessel internal vibration testing at VYNPS was provided to VY by GE letter dated March 17, 1976. The report provides the results of a series of tests that were conducted to obtain vibration measurements on various internal reactor components to confirm the mechanical integrity of the system with respect to flow induced vibrations. Displacement and strain measurement data were taken under a variety of steady state and transient flow conditions, different in-vessel locations, and at power plateaus of 50%, 75%, and 100% power.<br><br>The report concluded that the analysis revealed no flow induced vibrations which approach the criteria limits. No over-stressing was observed in any of the components monitored at any of the steady state or transient test conditions. No restrictions for reasons of flow induced vibration exist for the operation of the recirculation system, other than normal operating limits and recirculation pump speed mismatch limits. |
| | EPU Analysis and Conclusion:<br><br>This test obtains vibration measurements on various reactor pressure vessel internals to demonstrate the mechanical integrity of the system under conditions of flow induced vibration, and to check the validity of the analytical vibration model. Analysis of the reactor vessel internals at CPPU power level was performed to ensure that the design continues to comply with the existing structural requirements. See Entergy's letter of September 23, 2004 (BVY 04- |

| STP No. | Historical Records and Justification for not performing EPU Testing |
|---|---|
| X-5 | 100) for details regarding the monitoring and evaluation of flow induced vibration of the steam dryer, as well as other plant systems and components.<br><br>As stated in Section 3.4.2 of the Power Uprate Safety Analysis Report, calculations indicate that vibrations of all safety-related reactor internal components under EPU conditions are within GE acceptance criteria. |