AmerGen

An Exelon Company
AmerGen Energy Company, LLC
4300 Winfield Road
Warrenville, IL 60555

www.exeloncorp.com

Exelon Nuclear
Exelon Generation
4300 Winfield Road
Warrenville, IL 60555

10 CFR 50.54 (f)

RS-04-109
5928-04-20180

July 27, 2004

United States Nuclear Regulatory Commission
ATTN: Document Control Desk
11555 Rockville Pike
Rockville, Maryland 20852

Braidwood Station, Units 1 and 2
Facility Operating License Nos. NPF-72 and NPF-77
NRC Docket Nos. STN 50-456 and STN 50-457

Byron Station, Units 1 and 2
Facility Operating License Nos. NPF-37 and NPF-66
NRC Docket Nos. STN 50-454 and STN 50-455

Three Mile Island Nuclear Station, Unit No. 1
Facility Operating License No. DPR-50
NRC Docket No. 50-289

Subject: Initial response to NRC Bulletin 2004-01, "Inspection of Alloy 82/182/600 Materials Used in the Fabrication of Pressurizer Penetrations and Steam Space Piping Connections at Pressurized-Water Reactors"

Reference: NRC Bulletin 2004-01, "Inspection of Alloy 82/182/600 Materials Used in the Fabrication of Pressurizer Penetrations and Steam Space Piping Connections at Pressurized-Water Reactors," dated May 28, 2004

The purpose of this letter is to provide the Exelon Generation Company, LLC and the AmerGen Energy Company, LLC initial, sixty-day, response to the referenced NRC bulletin. The responses to NRC Bulletin 2004-01 questions 1(a), 1(b), 1(c), and 1(d) detailing the description and fabrication of the pressurizer connections; the current and proposed inspection program for the components; and the basis for assuring reactor coolant pressure boundary integrity for pressurizer penetrations and steam space connections are provided in the attachments to this letter.

A110

Should you have any questions concerning this letter, please contact David J. Chrzanowski at (630) 657-2816.

I declare under penalty of perjury that the foregoing is true and correct.

Executed on July 27, 2004

Keith R. Jury
Director – Licensing and Regulatory Affairs
Exelon Generation Company, LLC
AmerGen Energy Company, LLC

Attachments: Attachment 1, Initial Response to NRC Bulletin 2004-01, Braidwood Station, Units 1 and 2
Attachment 2, Initial Response to NRC Bulletin 2004-01, Byron Station, Units 1 and 2
Attachment 3, Initial Response to NRC Bulletin 2004-01, Three Mile Island Nuclear Station, Unit 1

Attachment 1
Initial Response to NRC Bulletin 2004-01
Braidwood Station, Units 1 and 2

Requested Information 1 (a)

A description of the pressurizer penetrations and steam space piping connections at your plant. At a minimum, this description should include materials of construction (e.g., stainless steel piping and/or weld metal, Alloy 600 piping/sleeves, Alloy 82/182 weld metal or buttering, etc.), joint design (e.g., partial penetration welds, full penetration welds, bolted connections, etc.), and, in the case of welded joints, whether or not the weld was stress-relieved prior to being put into service. Additional information relevant with respect to determining the susceptibility of your plant's pressurizer penetrations and steam space piping connections to PWSCC should also be included.

Response:

Braidwood Station Unit 1 and Unit 2 are 4-loop pressurized water reactors with the nuclear steam supply system designed by Westinghouse Electric Company, LLC (Westinghouse). The Braidwood Station units have one Westinghouse Model 84 pressurizer in each unit. Braidwood Station, Unit 1 began commercial operation on July 29, 1988. Braidwood Station, Unit 2 began commercial operation on October 17, 1988.

The pressurizers were fabricated by Westinghouse at their Pensacola, Florida facility. Each of the pressurizers has six piping connections: five steam space connections and one surge line connection. The five steam space connections are: one spray line connection, one relief valve line connection, and three safety valve line connections. The pressurizer manways (one per pressurizer) are not discussed in this response since they do not contain any Alloy 600/82/182. Table 1 lists the pressurizer steam space connections and corresponding identifier.

Table 1
Braidwood Station Pressurizer Steam Space Connection Listing

Unit	Steam Space Connection	Identifier
1	safety valve line connection	1PZR-01-SE-02
1	safety valve line connection	1PZR-01-SE-03
1	safety valve line connection	1PZR-01-SE-04
1	relief valve line connection	1PZR-01-SE-05
1	spray line connection	1PZR-01-SE-06
2	safety valve line connection	2PZR-01-SE-02
2	safety valve line connection	2PZR-01-SE-03
2	safety valve line connection	2PZR-01-SE-04
2	relief valve line connection	2PZR-01-SE-05
2	spray line connection	2PZR-01-SE-06

All six of the pressurizer connections have an Alloy 82/182 weld connection from the low alloy steel pressurizer nozzles to the stainless steel safe-end attachments. These six locations are the only Alloy 600/82/182 based connections on the Braidwood Station pressurizers. Piping connections downstream of these safe-end connections do not have any Alloy 600/82/182 based components in any application. Also, the eight, ¾ inch instrument line connections and the ¾ inch sample line connection do not incorporate

any Alloy 600/82/182 based components in their connections to the pressurizer or in any of their downstream connections. The Braidwood Station pressurizers have heater penetrations that use stainless steel sleeves connected to the pressurizer by stainless steel welds.

Pressurizer Steam Space Connections – Braidwood Station, Unit 1

Connection 1PZR-01-SE-02

1PZR-01-SE-02 is a six inch nominal pipe diameter butt welded connection joining the pipe that connects the "A" pressurizer safety relief valve (1RY8001A) to the pressurizer upper head nozzle (1PZR-01-N4A). The welded connection joins the SA-508, Class 2 low alloy steel pressurizer nozzle material to SA-182, Grade F-316L safe-end material with an Alloy 82/182 weld.

Downstream of the nozzle to safe-end weld is a safe-end to elbow weld. This is a stainless steel weld that joins the SA-182, Grade F-316L safe-end material to the six inch, schedule 160, SA-403, Grade WP304 elbow. Downstream of the elbow are all stainless steel welded connections between sections of six inch, schedule 160, SA-376, Grade TP 304 and additional SA-403, Grade WP304 elbows with the final steam space pipe connection terminating in a stainless steel welded connection between a SA-403, Grade WP304 elbow and a SA-182, Grade F-316 flange. The flange provides the bolted connection between the pressurizer steam space piping and the pressurizer safety valve.

During fabrication, weld 1PZR-01-SE-02, identified in shop records as weld 4A on nozzle C, did not receive any post-weld heat treatment. A review of the fabrication records indicated that there were no repairs to this weld during construction.

Connection 1PZR-01-SE-03

1PZR-01-SE-03 is a six inch nominal pipe diameter butt welded connection joining the pipe that connects the "B" pressurizer safety relief valve (1RY8001B) to the pressurizer upper head nozzle (1PZR-01-N4B). The welded connection joins the SA-508, Class 2 low alloy steel pressurizer nozzle material to SA-182, Grade F-316L safe-end material with an Alloy 82/182 weld.

Downstream of the nozzle to safe-end weld is a safe-end to elbow weld. This is a stainless steel weld that joins the SA-182, Grade F-316L safe-end material to the six inch, schedule 160, SA-403, Grade WP304 elbow. Downstream of the elbow are all stainless steel welded connections between sections of six inch, schedule 160, SA-376, Grade TP 304 and additional SA-403, Grade WP304 elbows with the final steam space pipe connection terminating in a stainless steel welded connection between a SA-403, Grade WP304 elbow and a SA-182, Grade F-316 flange. The flange provides the bolted connection between the pressurizer steam space piping and the pressurizer safety valve.

During fabrication, weld 1PZR-01-SE-03, identified in shop records as weld 4B on nozzle B, did not receive any post-weld heat treatment.

A review of the fabrication records indicated that there were five repairs performed on this weld: 2.25" long and 3/8" deep from the inside diameter (ID) between radiography location marks 0 to 1; 1.5" long and 11/16" deep from the outside diameter (OD) between radiography location marks 5 to 6; 0.75" long and 11/16" deep from the OD between radiography location marks 6 to 7; 1" long and 11/16" deep from the OD also between radiography location marks 6 to 7; and 1.25" long and ¼" to 3/8" deep from the OD between radiography location marks 11 to 0.

Subsequent to the repairs, a final, acceptable, radiography examination (RT) was performed.

Connection 1PZR-01-SE-04

1PZR-01-SE-04 is a six inch nominal pipe diameter butt welded connection joining the pipe that connects the "C" pressurizer safety relief valve (1RY8001C) to the pressurizer upper head nozzle (1PZR-01-N4B). The welded connection joins the SA-508, Class 2 low alloy steel pressurizer nozzle material to SA-182, Grade F-316L safe-end material with an Alloy 82/182 weld.

Downstream of the nozzle to safe-end weld is a safe-end to elbow weld. This is a stainless steel weld that joins the SA-182, Grade F-316L safe-end material to the six inch, schedule 160, SA-403, Grade WP304 elbow. Downstream of the elbow are all stainless steel welded connections between sections of six inch, schedule 160, SA-376, Grade TP 304 and additional SA-403, Grade WP304 elbows with the final steam space pipe connection terminating in a stainless steel welded connection between a SA-403, Grade WP304 elbow and a SA-182, Grade F-316 flange. The flange provides the bolted connection between the pressurizer steam space piping and the pressurizer safety valve.

During fabrication, weld 1PZR-01-SE-04, identified in shop records as weld 4C on nozzle A, did not receive any post-weld heat treatment. A review of the fabrication records indicated that there were five spot repairs performed on this weld. The records did not specify the length for any of the repair areas which were located between radiography location marks: 2 to 3, 4 to 5, 5 to 6, 6 to 7, and 7 to 8. All repairs were listed as being 0.2" deep from the OD.

Subsequent to the repairs, a final, acceptable, RT was performed.

Connection 1PZR-01-SE-05

1PZR-01-SE-05 is a four inch nominal pipe diameter butt welded connection joining the pressurizer spray line piping to the four inch pressurizer upper head nozzle (1PZR-01-N2).

The welded connection joins the SA-508, Class 2 low alloy steel pressurizer nozzle material to SA-182, Grade F-316L safe-end material with an Alloy 82/182 weld. The spray nozzle design incorporates a 0.120 inch thick thermal sleeve. The thermal sleeve is internally mounted in the nozzle and is attached by four 0.50 inch spot welds, to the stainless steel cladding, at the nozzle inner radius. The upper portion of the thermal sleeve is welded to the inner diameter of the stainless steel safe-end for approximately 45° of the inner circumference. All these attachment welds are stainless steel material, not Alloy 82/182.

Up stream of the nozzle to safe-end weld is a weld that joins the four inch safe-end to the four inch side of a 4" by 6" schedule 160, concentric reducer. This is a stainless steel weld that joins the SA-182, Grade F-316L safe-end material to the SA-403, Grade WP304 reducer. Upstream of the reducer are all stainless steel welded connections between sections of six inch, schedule 160, SA-376, Grade TP 304 piping and additional SA-403, Grade WP304 elbows. The six inch schedule 160 piping run transitions to a 4 inch schedule 160 piping run which also contains weld connections between SA-376, Grade TP 304 pipe segments and SA-403, Grade WP304 elbows. The piping run terminates with welded connections to valves 1RY455B and 1RY455C (SA-403, Grade WP304 valve bodies).

During fabrication, weld 1PZR-01-SE-05, identified in shop records as weld 2 on nozzle E, did not receive any post-weld heat treatment. A review of the fabrication records indicated that there were no repairs to this weld during construction.

Connection 1PZR-01-SE-06

1PZR-01-SE-06 is a six inch nominal pipe diameter butt welded connection joining the pipe that connects the power operated relief valves (1RY455A and 1RY456) to the pressurizer upper head nozzle (1PZR-01-N3). The welded connection joins the SA-508, Class 2 low alloy steel pressurizer nozzle material to SA-182, Grade F-316L safe-end material with an Alloy 82/182 weld.

Downstream of the nozzle to safe-end weld is a safe-end to elbow weld. This is a stainless steel weld that joins the SA-182, Grade F-316L safe-end material to the six inch, schedule 160, SA-403, Grade WP304, 45° elbow. Downstream of the elbow are all stainless steel welded connections between sections of six inch, schedule 160, SA-376, Grade TP 304 pipe segments and additional SA-403, Grade WP304 elbows connecting to a branching 6 by 6 by 3 reducing tee (SA-403, Grade WP304). Two, three inch piping runs continue downstream with welded connections between SA-376, Grade TP 304 pipe segments and SA-403, Grade WP304 elbows. The piping run terminates with welded connections to valves 1RY455A and 1RY456 (SA-182, Grade F316 valve bodies).

During fabrication, weld 1PZR-01-SE-06, identified in shop records as weld 3 on nozzle D, did not receive any post-weld heat treatment.

A review of the fabrication records indicated that there were no repairs to this weld during construction.

Pressurizer Steam Space Connections – Braidwood Station, Unit 2

Connection 2PZR-01-SE-02

2PZR-01-SE-02 is a six inch nominal pipe diameter butt welded connection joining the pipe that connects the "A" pressurizer safety relief valve (2RY8001A) to the pressurizer upper head nozzle (2PZR-01-N4A).

The welded connection joins the SA-508, Class 2 low alloy steel pressurizer nozzle material to SA-182, Grade F-316L safe-end material with an Alloy 82/182 weld.

Downstream of the nozzle to safe-end weld is a safe-end to elbow weld. This is a stainless steel weld that joins the SA-182, Grade F-316L safe-end material to the six inch, schedule 160, SA-403, Grade WP304 elbow. Downstream of the elbow are all stainless steel welded connections between sections of six inch, schedule 160, SA-376, Grade TP 304 and additional SA-403, Grade WP304 elbows with the final steam space pipe connection terminating in a stainless steel welded connection between a SA-403, Grade WP304 elbow and a SA-182, Grade F-316 flange. The flange provides the bolted connection between the pressurizer steam space piping and the pressurizer safety valve.

During fabrication, weld 2PZR-01-SE-02, identified in shop records as weld 4A on nozzle C, did not receive any post-weld heat treatment.

Additional Information for 2PZR-01-SE-02

A review of the fabrication records indicated that there were four repairs performed on this weld. The records did not specify the length for any of the repair areas which were located between radiography location marks: 6 to 7, 10 to 11, 11 to 12, and 0 to 1. All repairs were listed as being approximately 0.5" deep from the OD.

Subsequent to the repairs, a final, acceptable, RT was performed.

Connection 2PZR-01-SE-03

2PZR-01-SE-03 is a six inch nominal pipe diameter butt welded connection joining the pipe that connects the "B" pressurizer safety relief valve (2RY8001B) to the pressurizer upper head nozzle (2PZR-01-N4B). The welded connection joins the SA-508, Class 2 low alloy steel pressurizer nozzle material to SA-182, Grade F-316L safe-end material with an Alloy 82/182 weld.

Downstream of the nozzle to safe-end weld is a safe-end to elbow weld. This is a stainless steel weld that joins the SA-182, Grade F-316L safe-end material to the six inch, schedule 160, SA-403, Grade WP304 elbow. Downstream of the elbow are all stainless steel welded connections between sections of six inch, schedule 160, SA-376, Grade TP 304 and additional SA-403, Grade WP304 elbows with the final steam space pipe connection terminating in a stainless steel welded connection between a SA-403,

Grade WP304 elbow and a SA-182, Grade F-316 flange. The flange provides the bolted connection between the pressurizer steam space piping and the pressurizer safety valve.

During fabrication, weld 2PZR-01-SE-03, identified in shop records as weld 4B on nozzle B, did not receive any post-weld heat treatment.

A review of the fabrication records indicated that there was one repair performed on this weld. The repair area is listed as being 0.5" long and approximately 0.625" deep from the ID between radiography location mark 5 to 6.

Subsequent to the repair, a final, acceptable, RT was performed.

Connection 2PZR-01-SE-04

2PZR-01-SE-04 is a six inch nominal pipe diameter butt welded connection joining the pipe that connects the "C" pressurizer safety relief valve (2RY8001C) to the pressurizer upper head nozzle (2PZR-01-N4B). The welded connection joins the SA-508, Class 2 low alloy steel pressurizer nozzle material to SA-182, Grade F-316L safe-end material with an Alloy 82/182 weld.

Downstream of the nozzle to safe-end weld is a safe-end to elbow weld. This is a stainless steel weld that joins the SA-182, Grade F-316L safe-end material to the six inch, schedule 160, SA-403, Grade WP304 elbow. Downstream of the elbow are all stainless steel welded connections between sections of six inch, schedule 160, SA-376, Grade TP 304 and additional SA-403, Grade WP304 elbows with the final steam space pipe connection terminating in a stainless steel welded connection between a SA-403, Grade WP304 elbow and a SA-182, Grade F-316 flange. The flange provides the bolted connection between the pressurizer steam space piping and the pressurizer safety valve.

During fabrication, weld 2PZR-01-SE-04, identified in shop records as weld 4C on nozzle A, did not receive any post-weld heat treatment.

A review of the fabrication records indicated that there were no repairs to this weld during construction.

Connection 2PZR-01-SE-05

2PZR-01-SE-05 is a four inch nominal pipe diameter butt welded connection joining the pressurizer spray line piping to the four inch pressurizer upper head nozzle (2PZR-01-N2).

The welded connection joins the SA-508, Class 2 low alloy steel pressurizer nozzle material to SA-182, Grade F-316L safe-end material with an Alloy 82/182 weld. The spray nozzle design incorporates a 0.120 inch thick thermal sleeve. The thermal sleeve is internally mounted in the nozzle and is attached by four 0.50 inch spot welds, to the stainless steel cladding, at the nozzle inner radius. The upper portion of the thermal

sleeve is welded to the inner diameter of the stainless steel safe-end for approximately 45° of the inner circumference. All these attachment welds are stainless steel material, not Alloy 82/182.

Up stream of the nozzle to safe-end weld is a weld that joins the four inch safe-end to the four inch side of a 4" by 6" schedule 160, concentric reducer. This is a stainless steel weld that joins the SA-182, Grade F-316L safe-end material to the SA-403, Grade WP304 reducer. Upstream of the reducer are all stainless steel welded connections between sections of six inch, schedule 160, SA-376, Grade TP 304 piping and additional SA-403, Grade WP304 elbows. The six inch schedule piping run transitions to a 4 inch schedule 160 piping run which also contains weld connections between SA-376, Grade TP 304 pipe segments and SA-403, Grade WP304 elbows. The piping run terminates with welded connections to valves 2RY455B and 2RY455C (SA-403, Grade WP304 valve bodies).

During fabrication, weld 2PZR-01-SE-05, identified in shop records as weld 2 on nozzle E, did not receive any post-weld heat treatment.

A review of the fabrication records indicated that there were no repairs to this weld during construction.

Connection 2PZR-01-SE-06

2PZR-01-SE-06 is a six inch nominal pipe diameter butt welded connection joining the pipe that connects the power operated relief valves (2RY455A and 2RY456) to the pressurizer upper head nozzle (2PZR-01-N3). The welded connection joins the SA-508, Class 2 low alloy steel pressurizer nozzle material to SA-182, Grade F-316L safe-end material with an Alloy 82/182 weld.

Downstream of the nozzle to safe-end weld is a safe-end to elbow weld. This is a stainless steel weld that joins the SA-182, Grade F-316L safe-end material to the six inch, schedule 160, SA-403, Grade WP304, 45° elbow. Downstream of the elbow are all stainless steel welded connections between sections of six inch, schedule 160, SA-376, Grade TP 304 pipe segments and additional SA-403, Grade WP304 elbows connecting to a branching 6 by 6 by 3 reducing tee (SA-403, Grade WP304). Two, three inch piping runs continue downstream with welded connections between SA-376, Grade TP 304 pipe segments and SA-403, Grade WP304 elbows. The piping run terminates with welded connections to valves 2RY455A and 2RY456 (SA-182, Grade F316 valve bodies).

During fabrication, weld 2PZR-01-SE-06, identified in shop records as weld 3 on nozzle D, did not receive any post-weld heat treatment.

A review of the fabrication records indicated that there were no repairs to this weld during construction.

Requested Information 1 (b)

A description of the inspection program for Alloy 82/182/600 pressurizer penetrations and steam space piping connections that has been implemented at your plant. The description should include when the inspections were performed; the areas, penetrations and steam space piping connections inspected; the extent (percentage) of coverage achieved for each location which was inspected; the inspection methods used; the process used to resolve any inspection findings; the quality of the documentation of the inspections (e.g., written report, video record, photographs); and, the basis for concluding that your plant satisfies applicable regulatory requirements related to the integrity of pressurizer penetrations and steam space piping connections. If leaking pressurizer penetrations or steam space piping connections were found, indicate what followup NDE was performed to characterize flaws in the leaking penetrations.

Response:

The Alloy 82/182/600 pressurizer penetration and steam space connections at Braidwood Station are limited to the ten (five per unit) low alloy steel nozzle to stainless steel, Alloy 82, welded safe-end connections. All the pressurizer welds subject to the actions of this bulletin (identified in Table 2) have had volumetric and surface examinations performed in accordance with the requirements of the American Society of Mechanical Engineers (ASME) Boiler and Pressure Vessel Code, Section XI, "Rules for Inservice Inspection of Nuclear Power Plant Components," Code Category B-F,[1] Code Item number B5.40.[2] The first inservice inspection (ISI) Interval examinations were performed in accordance with the 1983 Edition, Summer 1983 addenda, of the ASME Code Section XI. Examinations performed in the second ISI interval were performed in accordance with the 1989 Edition, no addenda, of the ASME Code Section XI. The examination areas for these welds were those identified in the ASME Code Section XI, Figure IWB-2500-8, "Similar and Dissimilar Metal Welds in Components and Piping." This examination area is the same for the ASME Code Section XI Editions 1983 through 1989.

Both Braidwood Station units are now in the 2nd Interval with the ISI program, as stated above, based on the 1989 Edition of the ASME Code Section XI. On February 20, 2001, the NRC approved the use of a risk informed methodology for the selection and examination of ASME Code Class 1 and Code Class 2 piping welds; however, none of the subject pressurizer safe-end welds have been re-examined under the risk informed ISI program. In addition, there have been no volumetric re-examinations performed on the pressurizer welds subject to the actions of this bulletin since the implementation of Supplement 10 [3] to Appendix VIII [4] of the ASME Code Section XI since its implementation in November of 2002.

[1] "Pressure Retaining Dissimilar Metal Welds"
[2] "Pressurizer, Nozzle-to-Safe-end Butt Welds, Nominal Pipe Size 4 Inch or Larger"
[3] "Qualification Requirements for Dissimilar Metal Piping Welds"
[4] "Performance Demonstration for Ultrasonic Examination Systems"

All examinations, surface and volumetric, were recorded on hard copy data sheets. No video or photographs were used to supplement these examinations. There have been no recordable indications on these ten welds that required disposition. All surface examinations covered 100% of the required examination area. The ultrasonic examinations, although partially obstructed in some cases, achieved greater than 90% of the required examination volume coverage.

In addition to the nondestructive examinations listed below, all steam space pressurizer Alloy 82 welds were visually examined, at a minimum, each refueling outage in accordance with the pressure test requirements of the ASME Code Section XI, Category B-P. These examinations have, in the past, been performed with the insulation in place with a four-hour hold time at normal operating pressure and temperature.

There has not been any indication of leaking pressurizer penetrations or steam space piping connections at Braidwood Station and therefore, there has not been a need for dispositions, additional nondestructive examinations (NDE), examination expansions, or flaw characterizations.

Table 2
Braidwood Station Alloy 82/182 Pressurizer Welds
Examination History

Weld Identifier	Exam Date	Exam Method	Exam Technique	Results	Disposition/ Data Sheet
1PZR-01-SE-02	October 1995	Volumetric (Vol)	45° longitudinal wave transducer (45° L-wave)	No Recordable Indication(s) (NRI)	N/A 95BR1-UT-052
		Surface (S)	Dye Penetrant (PT)	NRI	N/A 95BR1-PT-026
1PZR-01-SE-03	March 1994	Vol	45° L-wave and 70° shear wave transducer (S-wave)	NRI	N/A 94BR1-UT-061 and 94BR1-UT-062
		S	PT	Three arc strike indications	Acceptable 94BR1-PT-021
1PZR-01-SE-04	March 1994	Vol	45° L-wave and 70° S-wave	NRI	N/A 94BR1-UT-061 and 94BR1-UT-062
		S	PT	NRI	N/A 94BR1-PT-021
1PZR-01-SE-05	October 1989	Vol	45° L-wave	360° root geometry indication	Acceptable 89BR1-UT-110 and 89BR1-UT-111
		S	PT	NRI	N/A 89BR1-PT-056
	September 1998	Vol	45° L-wave	NRI	N/A 98BR1-UTD-040
		S	PT	NRI	N/A 98BR1-PT-039
1PZR-01-SE-06	October 1989	Vol	45° L-wave	360° root geometry indication	Acceptable 89BR1-UT-108 and 89BR1-UT-109
		S	PT	NRI	N/A 89BR1-PT-057
	September 1998	Vol	45° L-wave	NRI	N/A 98BR1-UTD-045
		S	PT	NRI	N/A 98BR1-PT-040
2PZR-01-SE-02	April 1996	Vol	45° L-wave	NRI	N/A 95BR2-PT-064
		S	PT	NRI	N/A 95BR1-UT-156

Table 2
Braidwood Station Alloy 82/182 Pressurizer Welds
Examination History
(continued)

Weld Identifier	Exam Date	Exam Method	Exam Technique	Results	Disposition/ Data Sheet
2PZR-01-SE-03	October 1994	Vol	45° L-wave	NRI	N/A 94BR1-UT-060
		S	PT	NRI	N/A 94BR2-PT-038
2PZR-01-SE-04	October 1994	Vol	45° L-wave	NRI	N/A 94BR2-UT-060
		S	PT	NRI	N/A 94BR2-PT-038
2PZR-01-SE-05	April 1990	Vol	55° L-wave	Ultrasonic indications from the alloy 82/182 cladding interface	Indication was dispositioned as non-relevant and acceptable 90BR2-UT-100 and 90BR2-UT-101
		S	PT	NRI	N/A 90BR2-PT-043
	April 1999	Vol	45° L-wave	Pipe inner diameter geometry indications	Acceptable 99BR2-UTD-034
		S	PT	NRI	N/A 99BR2-PT-049
2PZR-01-SE-06	April 1990	Vol	55° L-wave	Ultrasonic indications from the alloy 82/182 cladding interface	Indication was dispositioned as non-relevant and acceptable 90BR2-UT-102 and 90BR2-UT-103
		S	PT	NRI	N/A 90BR2-PT0-048
	April 1999	Vol	45° L-wave	Pipe inner diameter geometry indications	Acceptable 99BR2-UTD-035
		S	PT	NRI	N/A 99BR2-PT-050

Table 2
Braidwood Station Alloy 82/182 Pressurizer Welds
Examination History

Basis for Concluding Regulatory Requirements are Satisfied

As stated above, the Braidwood Station pressurizer connections affected by this Bulletin are limited to the ten (five per unit), Alloy 82/182 full penetration nozzle to safe-end welds. The completion of volumetric, surface, and visual examinations without any evidence of recordable, relevant indications, through-wall leakage or any recordable wastage of the low alloy steel surface, is assurance of the prior integrity of the Alloy 82/182 connections.

Ongoing integrity of the Braidwood Station pressurizer steam space Alloy 82/182 connections is assured by performing 100% bare metal visual (BMV) examinations, at a minimum, each refueling outage (approximately 18 months). The examination will be performed until mitigation (i.e., weld overlays of the Alloy 82/182 locations) is performed on all pressurizer steam space connections.

The specific regulatory requirements are listed below with the associated response addressing how the requirement is met.

Compliance with Design Requirements: 10 CFR 50, Appendix A – General Design Criteria (GDC)

Criterion 14 – Reactor Coolant Pressure Boundary

> *"The reactor coolant pressure boundary shall be designed, fabricated, erected and tested so as to have an extremely low probability of abnormal leakage, of rapidly propagating failure, and of gross rupture."*

The Braidwood Station pressurizer steam space connections are designed, fabricated, tested, and examined in accordance with the requirements of the ASME Code Section III, "Requirements for Design and Manufacture of Nuclear Power Plant Components," and the ASME Code Section XI. In general, the controls established by these construction and inspection codes assure that the reactor coolant pressure boundary maintains an extremely low probability of rapidly propagating failure and gross rupture.

The BMV examination technique to be used in the Braidwood Station, Unit 1 Fall 2004 refueling outage, and in the Unit 2 Spring 2005 refueling outage, is a reliable means for identifying the very low leakage rates potentially associated with alloy 82/182 cracking. Therefore, based on the design, materials, and examination methods, the Braidwood Station pressurizers continue to comply with the requirements of GDC 14.

In addition, in the case of the pressurizer steam space Alloy 82/182 locations, modifications in the form of weld overlays using primary water stress corrosion cracking (PWSCC) resistant material will be performed to provide added assurance that these connections will have an extremely low probability of abnormal leakage, of rapidly propagating failure, and of gross rupture.

Criterion 31 – Fracture Prevention of Reactor Coolant Pressure Boundary

> *"The reactor coolant pressure boundary shall be designed with sufficient margin to assure that when stressed under operating, maintenance, testing, and postulated accident conditions (1) the boundary behaves in a non-brittle manner, and (2) the probability of rapidly propagating fracture is minimized. The design shall reflect consideration of service temperatures and other conditions of the boundary material under operating, maintenance, testing and postulated accident conditions and the uncertainties in determining (1) material properties, (2) the effects of irradiation on material properties, (3) residual, steady state and transient thermal stresses, and (4) size of flaws."*

The Braidwood Station pressurizer steam space connections are designed in accordance with the requirements of the ASME Code Section III with sufficient margin to the stresses encountered during operating, maintenance, testing, and postulated accident conditions. The pressurizer steam space connections, even the Alloy 82/182 welds, will continue to behave in a non-brittle manner. Ongoing BMV examinations of the pressurizer steam space connections at Braidwood Station will assure sufficient margin from rapidly propagating fracture until the susceptibility of Alloy 82/182 to PWSCC has been acceptably mitigated.

Criterion 32 – Inspection of Reactor Coolant Pressure Boundary

> *"Components which are part of the reactor coolant pressure boundary shall be designed to permit (1) periodic inspection and testing of important areas and features to assess their structural and leak tight integrity, and (2) an appropriate material surveillance program for the reactor pressure vessel."*

The Braidwood Station pressurizer steam space connections were designed to accommodate the visual, surface, and volumetric examinations of the ASME Code Section XI. While the Alloy 82/182 to safe-end connections present limitations to current, fully qualified performance demonstration initiative (PDI) volumetric examination, ongoing BMV examinations will assure the structural and leak tight integrity of the pressurizer steam space connections at Braidwood Station.

<u>Compliance with Operating Requirement: 10 CFR 50.36 - Plant Technical Specifications</u>

Braidwood Station Technical Specifications include requirements and associated action statements addressing reactor coolant pressure boundary (RCPB) leakage. The Braidwood Station Technical Specification limits for reactor coolant system operational leakage are one gallon per minute (gpm) for unidentified leakage, 10 gpm for identified leakage, and no pressure boundary leakage (reference Braidwood Station Technical Specifications Section 3.4.13, "RCS Operational Leakage"). Compliance with the zero non-isolable leakage criteria is met by conducting inspections and repairs in accordance with ASME B&PV Code, Section XI, and 10 CFR 50.55a, "Codes and standards," as described below.

The unidentified leakage limit of one gpm is established as a quantity which can be accurately measured while sufficiently low to ensure early detection of leakage.

Leakage of this magnitude can be reasonably detected within a short time, thus providing confidence that cracks associated with such leakage will not develop into a critical size before mitigating actions can be taken. If a through-wall boundary leak increases to the point where it is detected by the containment radiation monitor, mass balance calculations, or reactor containment sump level readings, the leak must be evaluated in accordance with the specified acceptance criteria and the plant must be shut down if the leak is determined to be a non-isolable reactor coolant system (RCS) pressure boundary fault.

In addition, Braidwood Station has implemented controls and expectations to address RCS leakage below Technical Specification limits. Exelon Generation Company (EGC) procedure ER-AP-331-1003, "RCS Leakage Monitoring and Action Plan," has been implemented to assure adequate monitoring of RCS leakage and to provide minimum actions that could be taken at various RCS leakage levels.

Compliance with Inspection Requirements: 10 CFR 50.55a and the ASME Code Section XI

10 CFR 50.55a, "Codes and standards," requires that inservice inspection and testing be performed in accordance with the requirements of the ASME Code, Section XI, "Inservice Inspection of Nuclear Plant Components." Section XI contains applicable rules for examination, evaluation, and repair of code class components, including the RCPB.

However, as discussed above, Braidwood Station is using a risk-informed methodology for the selection and examination of similar and dissimilar metal piping welds. While the Alloy 82/182 pressurizer steam space piping connections contain limitations in the performance of a fully qualified PDI volumetric examination, the current ISI program does not require that these welds be selected for volumetric examination. To compensate for the volumetric examination limitations, the Braidwood Station pressurizer steam space Alloy 82/182 connections will be visually examined each refueling outage until appropriate mitigation has been employed.

Compliance with Quality Assurance Requirements: 10 CFR 50, Appendix B

Criterion V of Appendix B to 10 CFR 50

- *Activities affecting quality shall be prescribed by documented instructions, procedures, or drawings, of a type appropriate to the circumstances and shall be accomplished in accordance with these instructions, procedures, or drawings. Instructions, procedures, or drawings shall include appropriate quantitative or qualitative acceptance criteria for determining that important activities have been satisfactorily accomplished.*

The ASME Code Section XI required visual examinations are performed using procedures that contain specific acceptance criteria or detailed recording criteria that are subsequently evaluated for acceptability. The visual examinations are performed using detailed instructions with a combination of qualitative and quantitative standards for the essential examination variables. Supplemental BMV examinations of the pressurizer

steam space Alloy 82/182 connections at Braidwood Station will be performed using standardized EGC procedures, which include appropriate acceptance criteria.

Criterion IX of Appendix B to 10 CFR 50

> *Criterion IX of Appendix B to 10 CFR 50 states that special processes, including nondestructive testing, shall be controlled and accomplished by qualified personnel using qualified procedures in accordance with applicable codes, standards, specifications, criteria, and other special requirements.*

The pressurizer steam space connection BMV examinations at Braidwood Station will be performed by certified Level II or Level III examiners using EGC approved procedures with additional detailed instructions, as necessary.

Criterion XVI of Appendix B to 10 CFR 50

> *Criterion XVI of Appendix B to 10 CFR 50 states that measures shall be established to assure that conditions adverse to quality are promptly identified and corrected. For significant conditions adverse to quality, the measures taken shall include root cause determination and corrective action to preclude repetition of the adverse conditions.*

The identification of an unacceptable visual indication requires repair, replacement or acceptance by analytical evaluation. In all cases, these indications would be tracked by the EGC Corrective Action Program (CAP). In the case of a significant adverse condition, the CAP requires determination of the cause of the failure, evaluation of the extent of condition, and assignment of appropriate corrective actions to preclude recurrence. The EGC CAP meets the requirements of 10 CFR 50, Appendix B, Criterion XVI.

Requested Information 1 (c)

A description of the Alloy 82/182/600 pressurizer penetration and steam space piping connection inspection program that will be implemented at your plant during the next and subsequent refueling outages. The description should include the areas, penetrations and steam space piping connections to be inspected; the extent (percentage) of coverage to be achieved for each location; inspection methods to be used; qualification standards for the inspection methods and personnel; the process used to resolve any inspection indications; the inspection documentation to be generated; and the basis for concluding that your plant will satisfy applicable regulatory requirements related to the structural and leakage integrity of pressurizer penetrations and steam space piping connections. If leaking pressurizer penetrations or steam space piping connections are found, indicate what followup NDE will be performed to characterize flaws in the leaking penetrations. Provide your plans for expansion of the scope of NDE to be performed if circumferential flaws are found in any portion of the leaking pressurizer penetrations or steam space piping connections.

Response:

Braidwood Station will be performing a BMV examination of all affected pressurizer penetrations and steam space piping connections during the next refueling outages for each unit. The visual examinations will be performed by certified Level II/III visual examiners qualified in the detection and assessment of boric acid leakage in accordance with EGC procedures ER-AA-335-015, "VT-2 Visual Examination," ER-AP-331-1001, "Boric Acid Corrosion Control (BACC) Inspection Locations, Implementation, and Inspection Guidelines," and ER-AP-331-1002, "Boric Acid Corrosion Control Program Identification, Assessment, and Evaluation." In addition, Braidwood Station will continue to perform this BMV examination in each subsequent refueling outage until appropriate mitigation has been implemented to eliminate the PWSCC susceptibility of the pressurizer penetrations and steam space piping connections. The current plan is to perform complete weld overlays, with PWSCC resistant material, on all susceptible pressurizer upper head locations.

Braidwood Station will use the guidance of ER-AP-331-1002 and LS-AA-125, "Corrective Action Program (CAP) Procedure," to evaluate the source of any indications and to resolve inspection indications. Any evidence of pressure boundary leakage will require disposition under TS 3.4.13, "RCS Operational Leakage," 10 CFR 50.72, "Immediate notification requirements for operating nuclear power reactors," and the EGC Corrective Action Program.

The examinations will be documented in accordance with ER-AA-335-015 and ER-AP-331-1002 with written reports. All affected pressurizer penetrations and steam space piping connections have met and will continue to meet all requirements related to the structural and leakage integrity of the RCPB. This is assured by compliance with the examination requirements of the ASME Code Section XI and the augmented examinations performed in accordance with this bulletin.

The basis for concluding that Braidwood Station satisfies applicable regulatory requirements related to the structural and leakage integrity of pressurizer penetrations and steam space piping connections is provided above in the "Basis for Concluding Regulatory Requirements are Satisfied" section of the question 1(b) response.

If a leaking penetration is found, a determination will be made, based on the location and nature of the indication, if additional NDE examinations will be performed or whether the location will be directly repaired by a weld overlay. In the evaluation required by the corrective action program, a determination will be made as to the extent of scope expansion and the type of NDE to be performed. All pressurizer upper head penetrations to steam space piping Alloy 82/182 weld connections are of such a configuration that a fully qualified PDI ultrasonic examination is not possible. Therefore, depending on the particulars of the indication, a best effort ultrasonic examination would be performed to characterize the flaw in the leaking penetration and to assess the condition of the other connections. Based on the results, and the quality of the examination technique, EGC may elect to preventively overlay some or all pressurizer upper head Alloy 82/182 locations.

Requested Information 1 (d)

In light of the information discussed in this bulletin and your understanding of the relevance of recent industry operating experience to your facility, explain why the inspection program identified in your response to item (1)(c) above is adequate for the purpose of maintaining the integrity of your facility's RCPB and for meeting all applicable regulatory requirements which pertain to your facility.

Response:

As stated in response to question 1(c) above, Braidwood Station will be performing a BMV examination of all affected pressurizer penetrations and steam space piping connections during the next refueling outages for each unit. The visual examinations will be performed by certified Level II/III visual examiners qualified in the detection and assessment of boric acid leakage in accordance with EGC procedures ER-AA-335-015, "VT-2 Visual Examination," ER-AP-331-1001, "Boric Acid Corrosion Control (BACC) Inspection Locations, Implementation, and Inspection Guidelines," and ER-AP-331-1002, "Boric Acid Corrosion Control Program Identification, Assessment, and Evaluation."

In addition, Braidwood Station will continue to perform BMV examinations in each subsequent refueling outage until appropriate mitigation has been implemented to eliminate the PWSCC susceptibility of the pressurizer penetrations and steam space piping connections. The current plan is to perform complete weld overlays, with PWSCC resistant material, on all susceptible pressurizer upper head locations.

The basis for concluding that the Braidwood Station BMV examination program meets all applicable regulatory requirements related to the structural and leakage integrity of pressurizer penetrations and steam space piping connections is provided above in the "Basis for Concluding Regulatory Requirements are Satisfied" section of the question 1(b) response.

Attachment 2
Initial Response to NRC Bulletin 2004-01
Byron Station, Units 1 and 2

Requested Information 1 (a)

A description of the pressurizer penetrations and steam space piping connections at your plant. At a minimum, this description should include materials of construction (e.g., stainless steel piping and/or weld metal, Alloy 600 piping/sleeves, Alloy 82/182 weld metal or buttering, etc.), joint design (e.g., partial penetration welds, full penetration welds, bolted connections, etc.), and, in the case of welded joints, whether or not the weld was stress-relieved prior to being put into service. Additional information relevant with respect to determining the susceptibility of your plant's pressurizer penetrations and steam space piping connections to PWSCC should also be included.

Response:

Byron Station Unit 1 and Unit 2 are 4-loop pressurized water reactors with the nuclear steam supply system designed by Westinghouse Electric Company, LLC (Westinghouse). The Byron Station units have one Westinghouse Model 84 pressurizer in each unit. Byron Station, Unit 1 began commercial operation on September 15, 1985. Byron Station, Unit 2 began commercial operation on August 21, 1987.

The pressurizers were fabricated by Westinghouse at their Pensacola, Florida facility. Each of the pressurizers has six piping connections: five steam space connections and one surge line connection. The five steam space connections are: one spray line connection, one relief valve line connection, and three safety valve line connections. The pressurizer manways (one per pressurizer) are not discussed in this response since they do not contain any Alloy 600/82/182. Table 1 lists the pressurizer steam space connections and corresponding identifier.

Table 1
Byron Station Pressurizer Steam Space Connection Listing

Unit	Steam Space Connection	Identifier
1	safety valve line connection (NOZZLE A-4C)	(1RY01S) PN-04-F4
1	safety valve line connection (NOZZLE B-4B)	(1RY01S) PN-05-F5
1	safety valve line connection (NOZZLE C-4A)	(1RY01S) PN-06-F6
1	relief valve line connection (NOZZLE D)	(1RY01S) PN-03-F3
1	spray line connection (NOZZLE E)	(1RY01S) PN-02-F2
2	safety valve line connection (NOZZLE A-4C)	(2RY01S) PN-03-F3
2	safety valve line connection (NOZZLE B-4B)	(2RY01S) PN-04-F4
2	safety valve line connection (NOZZLE C-4A)	(2RY01S) PN-05-F5
2	relief valve line connection (NOZZLE D)	(2RY01S) PN-06-F6
2	spray line connection (NOZZLE E)	(2RY01S) PN-02-F2

All six of the pressurizer connections utilize an Alloy 82/182 weld connection from the low alloy steel pressurizer nozzles to the stainless steel safe-end attachments. These six locations are the only Alloy 600/82/182 based connections on the Byron Station pressurizers. The piping downstream of these connections do not have any Alloy 600/82/182 based components in any application. Also, the eight, ¾ inch instrument line connections and the ¾ inch sample line connection do not incorporate any Alloy

600/82/182 based components in their connection to the pressurizer or in any of their downstream connections. The Byron Station pressurizers have heater penetrations that use stainless steel sleeves connected to the pressurizer by stainless steel welds.

Pressurizer Steam Space Connections – Byron Station, Unit 1

Connection (1RY01S) PN-04-F4

(1RY01S) PN-04-F4 is a six inch nominal pipe diameter butt welded connection joining the pipe that connects the "C" pressurizer safety relief valve (1RY8010C) to the pressurizer upper head nozzle (PN-04). The welded connection joins the SA-508, Class 2 low alloy steel pressurizer nozzle material to SA-182, Grade F-316L safe-end material with an Alloy 82/182 weld.

Downstream of the nozzle to safe-end weld is a safe-end to elbow weld. This is a stainless steel weld that joins the SA-182, Grade F-316L safe-end material to the six inch, schedule 160, SA-403, Grade WP304 elbow. Downstream of the elbow are all stainless steel welded connections between sections of six inch, schedule 160, SA-376, Grade TP 304 and additional SA-403, Grade WP304 elbows with the final steam space pipe connection terminating in a stainless steel welded connection between a SA-403, Grade WP304 elbow and a SA-182, Grade F-316 flange. The flange provides the bolted connection between the pressurizer steam space piping and the pressurizer safety valve.

During fabrication, weld (1RY01S) PN-04-F4, identified in shop records as weld 4C on nozzle A, did not receive any post-weld heat treatment.

A review of the fabrication records indicated that there were repairs to this weld during construction with a final acceptable radiography examination (RT) performed. Fabrication records do not indicate size, depth or pertinent details of actual repairs performed.

Connection (1RY01S) PN-05-F5

(1RY01S) PN-05-F5 is a six inch nominal pipe diameter butt welded connection joining the pipe that connects the "B" pressurizer safety relief valve (1RY8010B) to the pressurizer upper head nozzle (PN-05). The welded connection joins the SA-508, Class 2 low alloy steel pressurizer nozzle material to SA-182, Grade F-316L safe-end material with an Alloy 82/182 weld.

Downstream of the nozzle to safe-end weld is a safe-end to elbow weld. This is a stainless steel weld that joins the SA-182, Grade F-316L safe-end material to the six inch, schedule 160, SA-403, Grade WP304 elbow. Downstream of the elbow are all stainless steel welded connections between sections of six inch, schedule 160, SA-376, Grade TP 304 and additional SA-403, Grade WP304 elbows with the final steam space pipe connection terminating in a stainless steel welded connection between a SA-403, Grade WP304 elbow and a SA-182, Grade F-316 flange. The flange provides the bolted

connection between the pressurizer steam space piping and the pressurizer safety valve.

During fabrication, weld (1RY01S) PN-05-F5, identified in shop records as weld 4B on nozzle B, did not receive any post-weld heat treatment.

A review of the fabrication records indicated that there were repairs to this weld during construction with final acceptable RT performed. Fabrication records do not indicate size, depth or pertinent details of actual repairs performed.

Connection (1RY01S) PN-06-F6

(1RY01S) PN-06-F6 is a six inch nominal pipe diameter butt welded connection joining the pipe that connects the "A" pressurizer safety relief valve (1RY8010A) to the pressurizer upper head nozzle (PN-06). The welded connection joins the SA-508, Class 2 low alloy steel pressurizer nozzle material to SA-182, Grade F-316L safe-end material with an Alloy 82/182 weld.

Downstream of the nozzle to safe-end weld is a safe-end to elbow weld. This is a stainless steel weld that joins the SA-182, Grade F-316L safe-end material to the six inch, schedule 160, SA-403, Grade WP304 elbow. Downstream of the elbow are all stainless steel welded connections between sections of six inch, schedule 160, SA-376, Grade TP 304 and additional SA-403, Grade WP304 elbows with the final steam space pipe connection terminating in a stainless steel welded connection between a SA-403, Grade WP304 elbow and a SA-182, Grade F-316 flange. The flange provides the bolted connection between the pressurizer steam space piping and the pressurizer safety valve.

During fabrication, weld (1RY01S) PN-06-F6, identified in shop records as weld 4A on nozzle C, did not receive any post-weld heat treatment.

A review of the fabrication records indicated that there were repairs to this weld during construction with final acceptable RT performed. Fabrication records do not indicate size, depth or pertinent details of actual repairs performed.

Connection (1RY01S) PN-02-F2

(1RY01S) PN-02-F2 is a four inch nominal pipe diameter butt welded connection joining the pressurizer spray line piping to the four inch pressurizer upper head nozzle (PN-02).

The welded connection joins the SA-508, Class 2 low alloy steel pressurizer nozzle material to SA-182, Grade F-316L safe-end material with an Alloy 82/182 weld. The spray nozzle design incorporates a 0.120 inch thick thermal sleeve. The thermal sleeve is internally mounted in the nozzle and is attached by four 0.50 inch spot welds, to the stainless steel cladding, at the nozzle inner radius. The upper portion of the thermal sleeve is welded to the inner diameter of the stainless steel safe-end for approximately 45° of the inner circumference. All these attachment welds are stainless steel material, not Alloy 82/182.

Upstream of the nozzle to safe-end weld is a weld that joins the four inch safe-end to the four inch side of a 4" by 6" schedule 160, concentric reducer. This is a stainless steel weld that joins the SA-182, Grade F-316L safe-end material to the SA-403, Grade WP304 reducer. Upstream of the reducer are all stainless steel welded connections between sections of six inch, schedule 160, SA-376, Grade TP 304 piping and additional SA-403, Grade WP304 elbows. The six inch schedule piping run transitions to a 4 inch schedule 160 piping run which also contains weld connections between SA-376, Grade TP 304 pipe segments and SA-403, Grade WP304 elbows. The piping run terminates with welded connections to valves 1RY455B and 1RY455C (SA-403, Grade WP304 valve bodies).

During fabrication, weld (1RY01S) PN-02-F2, identified in shop records as weld PN-02-F2 on nozzle E, did not receive any post-weld heat treatment.

A review of the fabrication records indicated that there were cladding repairs. No specific information to size, length or depth of repairs was noted. Final RT of the nozzle to safe-end weld was performed and determined to be acceptable.

Connection (1RY01S) PN-03-F3

(1RY01S) PN-03-F3 is a six inch nominal pipe diameter butt welded connection joining the pipe that connects the power operated relief valves (1RY455A and 1RY456) to the pressurizer upper head nozzle. The welded connection joins the SA-508, Class 2 low alloy steel pressurizer nozzle material to SA-182, Grade F-316L safe-end material with an Alloy 82/182 weld.

Downstream of the nozzle to safe-end weld is a safe-end to elbow weld. This is a stainless steel weld that joins the SA-182, Grade F-316L safe-end material to the six inch, schedule 160, SA-403, Grade WP304, 45° elbow. Downstream of the elbow are all stainless steel welded connections between sections of six inch, schedule 160, SA-376, Grade TP 304 pipe segments and additional SA-403, Grade WP304 elbows connecting to a branching 6 by 6 by 3 reducing tee (SA-403, Grade WP304). Two, three inch piping runs continue downstream with welded connections between SA-376, Grade TP 304 pipe segments and SA-403, Grade WP304 elbows. The piping run terminates with welded connections to valves 1RY455A and 1RY456 (SA-182, Grade F316 valve bodies).

During fabrication, weld (1RY01S) PN-03-F3, identified in shop records as weld PN-03-F3 on nozzle D, did not receive any post-weld heat treatment.

A review of the fabrication records indicated that there were cladding repairs and a reject of one area of the Safe-End to Nozzle Weld. No specific information to size, length or depth of repairs was noted. Final RT of the nozzle to safe-end weld was performed and determined to be acceptable.

Pressurizer Steam Space Connections – Byron Station, Unit 2

Connection (2RY01S) PN-03-F3

(2RY01S) PN-03-F3 is a six inch nominal pipe diameter butt welded connection joining the pipe that connects the "C" pressurizer safety relief valve (2RY8010C) to the pressurizer upper head nozzle (PN-03). The welded connection joins the SA-508, Class 2 low alloy steel pressurizer nozzle material to SA-182, Grade F-316L safe-end material with an Alloy 82/182 weld.

Downstream of the nozzle to safe-end weld is a safe-end to elbow weld. This is a stainless steel weld that joins the SA-182, Grade F-316L safe-end material to the six inch, schedule 160, SA-403, Grade WP304 elbow. Downstream of the elbow are all stainless steel welded connections between sections of six inch, schedule 160, SA-376, Grade TP 304 and additional SA-403, Grade WP304 elbows with the final steam space pipe connection terminating in a stainless steel welded connection between a SA-403, Grade WP304 elbow and a SA-182, Grade F-316 flange. The flange provides the bolted connection between the pressurizer steam space piping and the pressurizer safety valve.

During fabrication, weld (2RY01S) PN-03-F3, identified in shop records as weld 4C on nozzle A, did not receive any post-weld heat treatment.

A review of the fabrication records indicated that there were cladding repairs and a reject of one area of the Safe-End to Nozzle Weld. No specific information to size, length or depth of repairs was noted. Final RT of the nozzle to safe-end weld was performed and determined to be acceptable.

Connection (2RY01S) PN-04-F4

(2RY01S) PN-04-F4 is a six inch nominal pipe diameter butt welded connection joining the pipe that connects the "B" pressurizer safety relief valve (2RY8010B) to the pressurizer upper head nozzle (PN-04). The welded connection joins the SA-508, Class 2 low alloy steel pressurizer nozzle material to SA-182, Grade F-316L safe-end material with an Alloy 82/182 weld.

Downstream of the nozzle to safe-end weld is a safe-end to elbow weld. This is a stainless steel weld that joins the SA-182, Grade F-316L safe-end material to the six inch, schedule 160, SA-403, Grade WP304 elbow. Downstream of the elbow are all stainless steel welded connections between sections of six inch, schedule 160, SA-376, Grade TP 304 and additional SA-403, Grade WP304 elbows with the final steam space pipe connection terminating in a stainless steel welded connection between a SA-403, Grade WP304 elbow and a SA-182, Grade F-316 flange. The flange provides the bolted connection between the pressurizer steam space piping and the pressurizer safety valve.

During fabrication, weld (2RY01S) PN-04-F4, identified in shop records as weld 4B on nozzle B, did not receive any post-weld heat treatment.

A review of the fabrication records indicated that there were cladding repairs and a reject of one area of the Safe-End to Nozzle Weld. No specific information to size, length or depth of repairs was noted. Final RT of the nozzle to safe-end weld was performed and determined to be acceptable.

Connection (2RY01S) PN-05-F5

(2RY01S) PN-05-F5 is a six inch nominal pipe diameter butt welded connection joining the pipe that connects the "A" pressurizer safety relief valve (2RY8010A) to the pressurizer upper head nozzle (PN-05). The welded connection joins the SA-508, Class 2 low alloy steel pressurizer nozzle material to SA-182, Grade F-316L safe-end material with an Alloy 82/182 weld.

Downstream of the nozzle to safe-end weld is a safe-end to elbow weld. This is a stainless steel weld that joins the SA-182, Grade F-316L safe-end material to the six inch, schedule 160, SA-403, Grade WP304 elbow. Downstream of the elbow are all stainless steel welded connections between sections of six inch, schedule 160, SA-376, Grade TP 304 and additional SA-403, Grade WP304 elbows with the final steam space pipe connection terminating in a stainless steel welded connection between a SA-403, Grade WP304 elbow and a SA-182, Grade F-316 flange. The flange provides the bolted connection between the pressurizer steam space piping and the pressurizer safety valve.

During fabrication, weld (2RY01S) PN-05-F5, identified in shop records as weld 4A on nozzle C, did not receive any post-weld heat treatment.

A review of the fabrication records indicated that there were cladding repairs and a reject of one area of the Safe-End to Nozzle Weld. No specific information to size, length or depth of repairs was noted. Final RT of the nozzle to safe-end weld was performed and determined to be acceptable.

Connection (2RY01S) PN-02-F2

(2RY01S) PN-02-F2 is a four inch nominal pipe diameter butt welded connection joining the pressurizer spray line piping to the four inch pressurizer upper head nozzle (PN-06).

The welded connection joins the SA-508, Class 2 low alloy steel pressurizer nozzle material to SA-182, Grade F-316L safe-end material with an Alloy 82/182 weld. The spray nozzle design incorporates a 0.120 inch thick thermal sleeve. The thermal sleeve is internally mounted in the nozzle and is attached by four 0.50 inch spot welds, to the stainless steel cladding, at the nozzle inner radius. The upper portion of the thermal sleeve is welded to the inner diameter of the stainless steel safe-end for approximately 45° of the inner circumference. All these attachment welds are stainless steel material, not Alloy 82/182.

Upstream of the nozzle to safe-end weld is a weld that joins the four inch safe-end to the four inch side of a 4" by 6" schedule 160, concentric reducer. This is a stainless steel

weld that joins the SA-182, Grade F-316L safe-end material to the SA-403, Grade WP304 reducer. Upstream of the reducer are all stainless steel welded connections between sections of six inch, schedule 160, SA-376, Grade TP 304 piping and additional SA-403, Grade WP304 elbows. The six inch schedule piping run transitions to a 4 inch schedule 160 piping run which also contains weld connections between SA-376, Grade TP 304 pipe segments and SA-403, Grade WP304 elbows. The piping run terminates with welded connections to valves 2RY455B and 2RY455C (SA-403, Grade WP304 valve bodies).

During fabrication, weld (2RY01S) PN-02-F2 identified in shop records as weld 2 on nozzle E, did not receive any post-weld heat treatment.

A review of the fabrication records indicated that there were cladding repairs and a reject of one area of the Safe-End to Nozzle Weld. No specific information to size, length or depth of repairs was noted. Final RT of the nozzle to safe-end weld was performed and determined to be acceptable.

Connection (2RY01S) PN-06-F6

(2RY01S) PN-06-F6 is a six inch nominal pipe diameter butt welded connection joining the pipe that connects the power operated relief valves (2RY455A and 2RY456) to the pressurizer upper head nozzle. The welded connection joins the SA-508, Class 2 low alloy steel pressurizer nozzle material to SA-182, Grade F-316L safe-end material with an Alloy 82/182 weld.

Downstream of the nozzle to safe-end weld is a safe-end to elbow weld. This is a stainless steel weld that joins the SA-182, Grade F-316L safe-end material to the six inch, schedule 160, SA-403, Grade WP304, 45° elbow. Downstream of the elbow are all stainless steel welded connections between sections of six inch, schedule 160, SA-376, Grade TP 304 pipe segments and additional SA-403, Grade WP304 elbows connecting to a branching 6 by 6 by 3 reducing tee (SA-403, Grade WP304). Two, three inch piping runs continue downstream with welded connections between SA-376, Grade TP 304 pipe segments and SA-403, Grade WP304 elbows. The piping run terminates with welded connections to valves 2RY455A and 2RY456 (SA-182, Grade F316 valve bodies).

During fabrication, weld (2RY01S) PN-06-F6, identified in shop records as weld 3 on nozzle D, did not receive any post-weld heat treatment.

A review of the fabrication records indicated that there were cladding repairs and a reject of one area of the Safe-End to Nozzle Weld. No specific information to size, length or depth of repairs was noted. Final RT of the nozzle to safe-end weld was performed and determined to be acceptable.

Requested Information 1 (b)

A description of the inspection program for Alloy 82/182/600 pressurizer penetrations and steam space piping connections that has been implemented at your plant. The description should include when the inspections were performed; the areas, penetrations and steam space piping connections inspected; the extent (percentage) of coverage achieved for each location which was inspected; the inspection methods used; the process used to resolve any inspection findings; the quality of the documentation of the inspections (e.g., written report, video record, photographs); and, the basis for concluding that your plant satisfies applicable regulatory requirements related to the integrity of pressurizer penetrations and steam space piping connections. If leaking pressurizer penetrations or steam space piping connections were found, indicate what followup NDE was performed to characterize flaws in the leaking penetrations.

Response:

The Alloy 82/182/600 pressurizer penetration and steam space connections at Byron Station are limited to the ten (five per unit) low alloy steel nozzle to stainless steel, Alloy 82/182, welded safe-end connections. All the pressurizer welds subject to the actions of this bulletin (identified in Table 2) have had volumetric and surface examinations performed in accordance with the requirements of the American Society of Mechanical Engineers (ASME) Boiler and Pressure Vessel Code, Section XI, "Rules for Inservice Inspection of Nuclear Power Plant Components," Code Category B-F,[5] Code Item number B5.40.[6] The first inservice inspection (ISI) Interval examinations were performed in accordance with the 1983 Edition, Summer 1983 addenda, of the ASME Code Section XI. Examinations performed in the second ISI interval were performed in accordance with the 1989 Edition, no addenda, of the ASME Code Section XI. The examination areas for these welds were those identified in the ASME Code Section XI, Figure IWB-2500-8, "Similar and Dissimilar Metal Welds in Components and Piping." This examination area is the same for the ASME Code Section XI Editions 1983 through 1989.

Byron Station Unit 1 and Byron Station Unit 2 are in the 2nd Interval with the ISI program, as stated above, based on the 1989 Edition of the ASME Code Section XI. On February 20, 2001 the NRC approved the use of a risk informed methodology for the selection and examination of ASME Code Class 1 and Code Class 2 piping welds; however, none of the subject pressurizer safe-end welds have been re-examined under the risk informed ISI program. In addition, there have been no volumetric re-examinations performed on the pressurizer welds subject to the actions of this bulletin since the implementation of Supplement 10 [7] to Appendix VIII [8] of the ASME Code Section XI since its implementation in November of 2002.

[5] "Pressure Retaining Dissimilar Metal Welds"
[6] "Pressurizer, Nozzle-to-Safe-end Butt Welds, Nominal Pipe Size 4 Inch or Larger"
[7] "Qualification Requirements for Dissimilar Metal Piping Welds"
[8] "Performance Demonstration for Ultrasonic Examination Systems"

All examinations, surface and volumetric, were recorded on hard copy data sheets. No video or photographs were used to supplement these examinations. There have been no recordable indications on these ten welds that required disposition. All surface examinations covered 100% of the required examination area. The ultrasonic examinations, although partially obstructed in some cases, achieved greater than 90% of the required examination volume coverage.

In addition to the nondestructive examinations listed in Table 2, all steam space pressurizer Alloy 82/182 welds were visually examined each refueling outage, at a minimum, in accordance with the pressure test requirements of the ASME Code Section XI, Category B-P. Also, Byron Station performed a 100% bare metal visual (BMV) examination of all affected Unit 2 pressurizer penetrations and steam space piping connections during the Spring 2004 refueling outage. This examination was performed in accordance with the industry's Materials Reliability Program (MRP) recommendations as described in a Leslie Hartz, Chair, MRP Senior Representatives, letter to PWR licensees dated January 20, 2004.

There has not been any indication of leaking pressurizer penetrations or steam space piping connections at Byron Station and therefore, there has not been a need for dispositions, additional nondestructive examinations (NDE), examination expansions, or flaw characterizations.

Table 2
Byron Station Alloy 82/182 Pressurizer Welds
Examination History

Weld Identifier	Exam Date	Exam Method	Exam Technique	Results	Disposition/ Data Sheet
(1RY01S) PN-02-F2	March 1987	Surface (S)	Dye Penetrant (PT)	NRI	N/A PZR-PT-072
	October 1988	Volumetric (Vol)	45° longitudinal wave transducer (45° L-wave)	NRI	N/A 88BY1-UT-084 and 88BY1-UT-086
(1RY01S) PN-03-F3	January 1990	Vol	45° L-wave	360° beam redirection indication	Acceptable 90BY1-UT-111 and 90BY1-UT-084
		S	PT	NRI	N/A 90BY1-PT-020
	November 1997	Vol	45° shear wave transducer (45° S-wave) and 45° L-Wave	Laminations and ID geometry	Acceptable 97BY1-UTD-080 and 97BY1-UTD-083
		S	PT	NRI	N/A 97BY1-PT-005
(1RY01S) PN-04-F4	April 1996	Vol	45° and 60 ° L-wave	NRI	N/A 96BY1-UTD-143
		S	PT	NRI	N/A 96BY1-PT-016
(1RY01S) PN-05-F5	January 1990	Vol	45° L-Wave	360° beam redirection indication	Acceptable 90BY1-UT-084 and 90BY1-UT-111
		S	PT	NRI	N/A 90BY1-PT-20
	November 1997	Vol	45° S-Wave and 45° L-Wave	ID geometry	Acceptable 97BY1-UTD-081 and 97BY1-UTD-084
		S	PT	NRI	N/A 97BY1-PT-008
(1RY01S) PN-06-F6	March 1987	S	PT	NRI	N/A PZR-PT--73
	October 1988	Vol	45° L-Wave	NRI	N/A 88BY1-UT-083 and 88BY1-UT-085
	November 1997	Vol	45° S-Wave and 45° L-Wave	ID geometry	Acceptable 97BY1-UTD-082 and 97BY1-UTD-085
(2RY01S) PN-02-F2	October 1990	Vol	55° L-wave	ID geometry	Acceptable 90BY2-UT-084

Table 2
Byron Station Alloy 82/182 Pressurizer Welds
Examination History
(continued)

Weld Identifier	Exam Date	Exam Method	Exam Technique	Results	Disposition/ Data Sheet
(2RY01S) PN-02-F2	September 1990	S	PT	NRI	N/A 90BY2-PT-044
(2RY01S) PN-03-F3	March 1995	Vol	70° and 45° L-Wave	NRI	N/A 95BY2-UTD-066
	February 1995	S	PT	NRI	N/A 95BY2-PT-062
	April 2001	Vol	45° and 60° L-Wave	NRI	N/A B2R09-UT-053
		S	PT	NRI	N/A B2R09-PT-018
(2RY01S) PN-04-F4	March 1995	Vol	70° and 45° L-Wave	NRI	N/A 95BY2-UTD-066
	February 1995	S	PT	NRI	N/A 95BY2-PT-078
(2RY01S) PN-05-F5	October 1993	Vol	70° and 45° L-Wave	NRI	N/A 93BY2-UT-123 and 93BY2-UT-124
	September 1993	S	PT	NRI	N/A 93BY2-PT-032
	April 2001	Vol	45° and 60° L-Wave	NRI	N/A B2R09-UT-070
		S	PT	NRI	N/A B2R09-PT-018
(2RY01S) PN-06-F6	October 1990	Vol	55° L-Wave	ID geometry	Acceptable 90BY2-UT-080
		S	PT	NRI	N/A 90BY2-PT-048
	April 2001	Vol	45° and 60° L-Wave	ID geometry	Acceptable B2R09-UT-071
		S	PT	NRI	B2R09-PT-019

Basis for Concluding Regulatory Requirements are Satisfied

As stated above, the Byron Station pressurizer connections affected by this Bulletin are limited to the ten (five per unit), Alloy 82/182 full penetration nozzle to safe-end welds. The completion of volumetric, surface, and visual examinations without any evidence of recordable, relevant indications, through-wall leakage or any recordable wastage of the low alloy steel surface, is assurance of the previous integrity of the Alloy 82/182 connections.

Ongoing integrity of the Byron Station pressurizer steam space Alloy 82/182 connections is assured by performing BMV examinations, at a minimum, each refueling outage (approximately 18 months). The examination will be performed until mitigation (i.e., weld overlays of the Alloy 82/182 locations) is performed on all pressurizer steam space connections.

The specific regulatory requirements are listed below with the associated response addressing how the requirement is met.

Compliance with Design Requirements: 10 CFR 50, Appendix A – General Design Criteria (GDC)

Criterion 14 – Reactor Coolant Pressure Boundary

> *"The reactor coolant pressure boundary shall be designed, fabricated, erected and tested so as to have an extremely low probability of abnormal leakage, of rapidly propagating failure, and of gross rupture."*

The Byron Station pressurizer steam space connections are designed, fabricated, tested, and examined in accordance with the requirements of the ASME Code Section III, "Requirements for Design and Manufacture of Nuclear Power Plant Components," and the ASME Code Section XI. In general, the controls established by these construction and inspection codes assures that the reactor coolant pressure boundary maintains an extremely low probability of rapidly propagating failure and gross rupture.

The BMV examination technique to be used in the Byron Station, Unit 1 Spring 2005 refueling outage, and in the Unit 2 Fall 2005 refueling outage, is a reliable means for identifying the very low leakage rates potentially associated with Alloy 82/182 cracking. Therefore, based on the design, materials, and examination methods, the Byron Station pressurizers continue to comply with the requirements of GDC 14.

In addition, in the case of the pressurizer steam space Alloy 82/182 locations, modifications in the form of weld overlays using primary water stress corrosion cracking (PWSCC) resistant material will be performed to provide added assurance that these connections will have an extremely low probability of abnormal leakage, of rapidly propagating failure, and of gross rupture.

Criterion 31 – Fracture Prevention of Reactor Coolant Pressure Boundary

> *"The reactor coolant pressure boundary shall be designed with sufficient margin to assure that when stressed under operating, maintenance, testing, and postulated accident conditions (1) the boundary behaves in a non-brittle manner and (2) the probability of rapidly propagating fracture is minimized. The design shall reflect consideration of service temperatures and other conditions of the boundary material under operating, maintenance, testing and postulated accident conditions and the uncertainties in determining (1) material properties, (2) the effects of irradiation on material properties, (3) residual, steady state and transient thermal stresses, and (4) size of flaws."*

The Byron Station pressurizer steam space connections are designed in accordance with the requirements of the ASME Code Section III with sufficient margin to the stresses encountered during operating, maintenance, testing, and postulated accident conditions. The pressurizer steam space connections, even the Alloy 82/182 welds, will continue to behave in a non-brittle manner. Ongoing BMV examinations of the pressurizer steam space connections at Byron Station will assure sufficient margin from rapidly propagating fracture until the susceptibility of Alloy 82/182 to PWSCC has been acceptably mitigated.

Criterion 32 – Inspection of Reactor Coolant Pressure Boundary

> *"Components which are part of the reactor coolant pressure boundary shall be designed to permit (1) periodic inspection and testing of important areas and features to assess their structural and leak tight integrity, and (2) an appropriate material surveillance program for the reactor pressure vessel."*

The Byron Station pressurizer steam space connections were designed to accommodate the visual, surface, and volumetric examinations of the ASME Code Section XI. While the Alloy 82/182 to safe-end connections present limitations to current, fully qualified performance demonstration initiative (PDI) volumetric examination, ongoing BMV examinations will assure the structural and leak tight integrity of the pressurizer steam space connections at Byron Station.

<u>Compliance with Operating Requirement: 10 CFR 50.36 - Plant Technical Specifications</u>

Byron Station Technical Specifications include requirements and associated action statements addressing reactor coolant pressure boundary (RCPB) leakage. The Byron Station Technical Specification limits for reactor coolant system operational leakage are one gallon per minute (gpm) for unidentified leakage, 10 gpm for identified leakage, and no pressure boundary leakage (reference Byron Station Technical Specifications Section 3.4.13, "RCS Operational Leakage"). Compliance with the zero non-isolable leakage criteria is met by conducting inspections and repairs in accordance with ASME B&PV Code, Section XI, and 10 CFR 50.55a, "Codes and standards," as described below.

The unidentified leakage limit of one gpm is established as a quantity which can be accurately measured while sufficiently low to ensure early detection of leakage. Leakage of this magnitude can be reasonably detected within a short time, thus providing confidence that cracks associated with such leakage will not develop into a

critical size before mitigating actions can be taken. If a through-wall boundary leak increases to the point where it is detected by the containment radiation monitor, mass balance calculations, or reactor containment sump level readings, the leak must be evaluated in accordance with the specified acceptance criteria and the plant must be shut down if the leak is determined to be a non-isolable reactor coolant system (RCS) pressure boundary fault.

In addition, Byron Station has implemented controls and expectations to address RCS leakage below Technical Specification limits. Exelon Generation Company (EGC) procedure ER-AP-331-1003, "RCS Leakage Monitoring and Action Plan," has been implemented to assure adequate monitoring of RCS leakage and to provide minimum actions that could be taken at various RCS leakage levels.

Compliance with Inspection Requirements: 10 CFR 50.55a and the ASME Code Section XI

10 CFR 50.55a, "Codes and standards," requires that inservice inspection and testing be performed in accordance with the requirements of the ASME B&PV Code, Section XI, "Inservice Inspection of Nuclear Plant Components." Section XI contains applicable rules for examination, evaluation, and repair of code class components, including the RCPB.

However, as discussed above, Byron Station is using a risk-informed methodology for the selection and examination of similar and dissimilar metal piping welds. While the Alloy 82/182 pressurizer steam space piping connections contain limitations in the performance of a fully qualified PDI volumetric examination, the current ISI program does not require that these welds be selected for volumetric examination. To compensate for the volumetric examination limitations, the Byron Station pressurizer steam space Alloy 82/182 connections will be visually examined each refueling outage until appropriate mitigation has been employed.

Compliance with Quality Assurance Requirements: 10 CFR 50, Appendix B

Criterion V of Appendix B to 10 CFR 50

> *Activities affecting quality shall be prescribed by documented instructions, procedures, or drawings, of a type appropriate to the circumstances and shall be accomplished in accordance with these instructions, procedures, or drawings. Instructions, procedures, or drawings shall include appropriate quantitative or qualitative acceptance criteria for determining that important activities have been satisfactorily accomplished.*

The ASME Code Section XI required visual examinations are performed using procedures that contain specific acceptance criteria or detailed recording criteria that are subsequently evaluated for acceptability. The visual examinations are performed using detailed instructions with a combination of qualitative and quantitative standards for the essential examination variables. Supplemental BMV examinations of the pressurizer steam space Alloy 82/182 connections at Byron Station will be performed using standardized EGC procedures, which include appropriate acceptance criteria.

Criterion IX of Appendix B to 10 CFR 50

> *Criterion IX of Appendix B to 10 CFR 50 states that special processes, including nondestructive testing, shall be controlled and accomplished by qualified personnel using qualified procedures in accordance with applicable codes, standards, specifications, criteria, and other special requirements.*

The pressurizer steam space connection BMV examinations at Byron Station will be performed by certified Level II or Level III examiners using EGC approved procedures with additional detailed instructions, as necessary.

Criterion XVI of Appendix B to 10 CFR 50

> *Criterion XVI of Appendix B to 10 CFR 50 states that measures shall be established to assure that conditions adverse to quality are promptly identified and corrected. For significant conditions adverse to quality, the measures taken shall include root cause determination and corrective action to preclude repetition of the adverse conditions.*

The identification of an unacceptable visual indication requires repair, replacement or acceptance by analytical evaluation. In all cases, these indications would be tracked by the EGC Corrective Action Program (CAP). In the case of a significant adverse condition, the CAP requires determination of the cause of the failure, evaluation of the extent of condition, and assignment of appropriate corrective actions to preclude recurrence. The EGC CAP meets the requirements of 10 CFR 50, Appendix B, Criterion XVI.

Requested Information 1 (c)

A description of the Alloy 82/182/600 pressurizer penetration and steam space piping connection inspection program that will be implemented at your plant during the next and subsequent refueling outages. The description should include the areas, penetrations and steam space piping connections to be inspected; the extent (percentage) of coverage to be achieved for each location; inspection methods to be used; qualification standards for the inspection methods and personnel; the process used to resolve any inspection indications; the inspection documentation to be generated; and the basis for concluding that your plant will satisfy applicable regulatory requirements related to the structural and leakage integrity of pressurizer penetrations and steam space piping connections. If leaking pressurizer penetrations or steam space piping connections are found, indicate what followup NDE will be performed to characterize flaws in the leaking penetrations. Provide your plans for expansion of the scope of NDE to be performed if circumferential flaws are found in any portion of the leaking pressurizer penetrations or steam space piping connections.

Response:

As stated in the response to question 1(b), Byron Station performed a 100% BMV examination of the Unit 2 Alloy 82/182 pressurizer steam space connections during the recent Spring 2004 refueling outage. Byron Station will continue to perform a 100%

BMV examination of all affected pressurizer penetrations and piping connections during the next refueling outages for each unit. The visual examinations will continue to be performed by certified Level II/III visual examiners qualified in the detection and assessment of boric acid leakage in accordance with EGC procedures ER-AA-335-015, "VT-2 Visual Examination," ER-AP-331-1001, "Boric Acid Corrosion Control (BACC) Inspection Locations, Implementation, and Inspection Guidelines," and ER-AP-331-1002, "Boric Acid Corrosion Control Program Identification, Assessment, and Evaluation." In addition, Byron Station will continue to perform this BMV examination in each subsequent refueling outage until appropriate mitigation has been implemented to eliminate the PWSCC susceptibility of the pressurizer penetrations and steam space piping connections. The current plan is to perform complete weld overlays, with PWSCC resistant material, on all susceptible pressurizer upper head locations.

Byron Station will use the guidance of ER-AP-331-1002 and LS-AA-125, "Corrective Action Program (CAP) Procedure," to evaluate the source of any indications and to resolve inspection indications. Any evidence of pressure boundary leakage will require disposition under TS 3.4.13, "RCS Operational Leakage," 10 CFR 50.72, "Immediate notification requirements for operating nuclear power reactors," and the EGC Corrective Action Program.

The examinations will be documented in accordance with ER-AA-335-015 and ER-AP-331-1002 with written reports. All affected pressurizer penetrations and steam space piping connections have met and will continue to meet all requirements related to the structural and leakage integrity of the RCPB. This is assured by compliance with the examination requirements of the ASME Code Section XI and the augmented examinations performed in accordance with this bulletin.

The basis for concluding that Byron Station satisfies applicable regulatory requirements related to the structural and leakage integrity of pressurizer penetrations and steam space piping connections is provided above in the "Basis for Concluding Regulatory Requirements are Satisfied" section of the question 1(b) response.

If a leaking penetration is found, a determination will be made, based on the location and nature of the indication, if additional NDE examinations will be performed or whether the location will be directly repaired by a weld overlay. In the evaluation required by the corrective action program, a determination will be made as to the extent of scope expansion and the type of NDE to be performed. All pressurizer upper head penetrations to steam space piping Alloy 82/182 connections are of such a configuration that a fully qualified PDI ultrasonic examination is not possible. Therefore, depending on the particulars of the indication, a best effort ultrasonic examination would be performed to characterize the flaw in the leaking penetration and to assess the condition of the other connections. Based on the results, and the quality of the examination technique, EGC may elect to preventively overlay some or all pressurizer upper head Alloy 82/182 connections.

Requested Information 1 (d)

In light of the information discussed in this bulletin and your understanding of the relevance of recent industry operating experience to your facility, explain why the inspection program identified in your response to item (1)(c) above is adequate for the purpose of maintaining the integrity of your facility's RCPB and for meeting all applicable regulatory requirements which pertain to your facility.

Response:

As stated in response to question 1(c) above, Byron Station Unit 2 performed a BMV examination of all affected pressurizer penetrations and steam space piping connections during the Spring 2004 refueling outage. There were no indications of leakage or boric acid deposits identified during this examination.

Byron Station will be performing a BMV examination of all affected pressurizer penetrations and steam space piping connections during the next refueling outages for each unit. The visual examinations will be performed by certified Level II/III visual examiners qualified in the detection and assessment of boric acid leakage in accordance with EGC procedures ER-AA-335-015, "VT-2 Visual Examination," ER-AP-331-1001, "Boric Acid Corrosion Control (BACC) Inspection Locations, Implementation, and Inspection Guidelines," and ER-AP-331-1002, "Boric Acid Corrosion Control Program Identification, Assessment, and Evaluation."

In addition, Byron Station will continue to perform BMV examinations in each subsequent refueling outage until appropriate mitigation has been implemented to eliminate the PWSCC susceptibility of the pressurizer penetrations and steam space piping connections. The current plan is to perform complete weld overlays, with PWSCC resistant material, on all susceptible pressurizer upper head locations.

The basis for concluding that the Byron Station BMV examination program meets all applicable regulatory requirements related to the structural and leakage integrity of pressurizer penetrations and steam space piping connections is provided above in the "Basis for Concluding Regulatory Requirements are Satisfied" section of the question 1(b) response.

Attachment 3
Initial Response to NRC Bulletin 2004-01
Three Mile Island Nuclear Station, Unit No.1

Requested Information 1 (a)

A description of the pressurizer penetrations and steam space piping connections at your plant. At a minimum, this description should include materials of construction (e.g., stainless steel piping and/or weld metal, Alloy 600 piping/sleeves, Alloy 82/182 weld metal or buttering, etc.), joint design (e.g., partial penetration welds, full penetration welds, bolted connections, etc.), and, in the case of welded joints, whether or not the weld was stress-relieved prior to being put into service. Additional information relevant with respect to determining the susceptibility of your plant's pressurizer penetrations and steam space piping connections to PWSCC should also be included.

Response:

Three Mile Island Nuclear Station (TMI), Unit No.1 is a single-loop pressurized water reactor with the nuclear steam supply system designed by Babcox and Willcox Company (B&W). TMI, Unit 1 has one B&W 177-FA pressurizer (Figure 1). TMI, Unit 1 began commercial operation on September 2, 1974.

The pressurizer was fabricated by B&W. The pressurizer has eight (8) water space connections, eight (8) steam space connections, one (1) surge line connection, and one (1) Manway. The eight (8) steam space connections are: one (1) spray line connection; one (1) relief valve line connection; two (2) safety valve line connections; three (3) level sensing connections, and; one (1) vent connection. A description of pressurizer connections materials utilized is contained herein.

Pressurizer Connections – TMI, Unit 1

The pressurizer vessel contains the following 18 penetrations.

Penetration Type	Number
1-inch vent nozzle	1
2½-inch pressure relief nozzles	3
4-inch spray nozzle	1
1½-inch thermowell	1
1-inch level sensing nozzles	6
1-inch sampling nozzle	1
19-inch heater bundle openings	3
10-inch surge nozzle (outside the scope of this document, not steam space)	1
16-inch manway (not discussed in this document as it contains no Alloy 600/182/82)	1

The pressurizer steam space connections on the upper head include a 16-inch manway, a 1-inch vent and sampling nozzle, three 2½-inch relief nozzles, and a 4-inch spray nozzle. The spray line and attached spray head are connected to the inside end of the spray nozzle and suspended from the upper head, as shown in Figure 2A.

The following is a discussion of the penetrations identified above (except for the surge line and manway).

1. Vent Nozzle

A 1-inch, Schedule 160 vent nozzle is located at the top center of the upper head to allow complete venting and to permit sampling from the steam space. The vent nozzle was fabricated from Alloy 600 bar (SB-166). The vent nozzle is joined to the interior of the upper head with a partial penetration weld (also called J-groove weld) as illustrated in Figure 2B. Based on information from the vendor, the J-groove weld is buttered at TMI, Unit 1. In addition to the J-groove weld, the vent nozzle installed at TMI, Unit 1 is a two-piece construction as illustrated in Figure 2B. The two Alloy 600 pieces (the top one is called a safe-end) is jointed, without weld butter, by a full penetration V-groove weld with Alloy 82/182. In addition to the J-groove weld, TMI, Unit 1 has an Alloy 82/182 weld boss welded to the pressurizer upper head outside diameter (O.D.) surface as illustrated in Figure 2B. The weld boss is not in contact with the reactor coolant (RC) water. The weld boss was applied during the pressurizer vessel fabrication as a contingency in the event a weld repair is needed.

Table 1 - Originally Installed 1-inch Vent Nozzle Assembly
(The pressurizer has 1 vent nozzle, see Figure 2A and 2B)

Connection	Material
1-inch vent nozzle, MK-78	Alloy 600
Vent nozzle to upper head J-groove weld, WP-95	Alloy 82 or 182
Butter for J-groove weld, WP-94	Alloy 82 or 182
Vent nozzle safe-end, MK-77	Alloy 600
Vent nozzle to safe-end weld, WP-92	Alloy 82 or 182
Vent nozzle weld boss (not wetted by RC)	Alloy 82 or 182
Safe-end to stainless steel component weld	Alloy 82 or 182

2. 2½-inch Pressure Relief Nozzles

Three 2½-inch pressure relief nozzles are located near the top of the vessel for attachment of pressure relief devices. The nozzles are manufactured from carbon steel with a stainless steel cladding welded on the inner diameter (I.D.). The nozzles are joined to the upper head with a full penetration weld (carbon steel weld) as illustrated in Figure 3.

A type 316 stainless steel safe-end (also called long weld necks) are welded to the top of the nozzles with full penetration V-groove with Alloy 182 as illustrated in Figure 3. Based on information from the vendor, the nozzles were buttered with Alloy 82/182 before the V-groove welding. The flanges on the long weld necks contain eight equally spaced bolt holes for attaching the pressure relief valves or power operated relief valve block valve to the nozzle. The materials used for the pressure relieve nozzle assembly are summarized in Table 2.

Table 2 - Originally Installed 2½-inch Pressure Relief Nozzle Assembly
(The pressurizer has 3 pressure relief nozzles, see Figure 3)

Connection	Material
2½-inch pressure relief nozzle	SS Clad carbon steel
Safe-end (also called long weld neck)	Type 316, SA-182
Pressure relief nozzle to safe-end weld, WP-91[(a)]	Alloy 182/82
Pressure Relief Nozzle Butter, WP-73	Alloy 182

(a) For WP-91, the tack and root layer was Alloy 82 and the balance of the weld and weld repair was Alloy 182.

3. 4-inch Spray Nozzle

The 4-inch, Schedule 120 spray nozzle is located on the upper head of the pressurizer vessel, connecting the external 2½-inch stainless steel spray line from the discharge of a reactor coolant pump with the internal stainless steel spray line and spray head. The nozzle is mounted normal to the pressurizer upper head, entering at a 45° angle from the horizontal. The nozzle body is carbon steel with stainless steel weld clad at the I.D. surface. The nozzle body is joined to the upper head with a full penetration weld (i.e., carbon steel weld).

Alloy 600 transition pieces are welded on both ends of the nozzle, the 8-inch long safe-end connecting with the stainless steel external spray line, and the 5-inch long extension pin (i.e.,

pipe section) that connects to the internal stainless steel spray line as illustrated in Figure 4. At the top, the Alloy 600 safe-end is attached to the 4-inch spray nozzle by a full penetration Alloy 82 V-groove weld. The Alloy 600 extension pin is attached to the stainless steel weld build-up on the inside of the carbon steel shell by a full penetration Alloy 82/182 V-groove weld without butter. The extension pin is attached to the internal stainless steel spray pipe by a full penetration Alloy 82 V-groove weld without butter.

A stainless steel thermal sleeve is installed inside the nozzle assembly to provide protection from thermal stresses. Based on information from the vendor, as illustrated in Figure 5, there are four Alloy 82/182-weld buttons on the inside surface just above the thermal sleeve and four Alloy 82/182 weld pads just below the thermal sleeve. The buttons and pads minimize the chances of the thermal sleeve becoming a loose part. The materials used for the 4-inch spray nozzle assembly at each unit are summarized in Table 3.

Table 3 - Originally Installed 4-inch Spray Nozzle Assembly
(The pressurizer has 1 spray nozzle, see Figure 4 and Figure 5)

Connection	Material
4-inch spray nozzle,	SS clad carbon steel
Safe-end, MK-45	Alloy 600
Safe-end to spray nozzle weld, WP-45	Alloy 82
Extension pin, MK-46	Alloy 600
Extension pin to spray nozzle weld, WP-46	Alloy 82
Extension pin to internal spray pipe, WP-104	Alloy 82 or 182
4 upper weld buttons, WP-103	Alloy 82 or 182
4 lower weld pads, WP-79	Alloy 82 or 182
Safe-end to stainless steel component weld	Alloy 82 or 182

4. 1½-inch Thermowell

The 1½-inch thermowell is a closed penetration located in the side of the pressurizer shell about 9 feet from the bottom of the vessel. The nozzle is located just above the upper heater bundle, extending 4 inches into the water space. The thermowell is made of Alloy 600. The outer end of the thermowell is threaded to hold the RTE sensor. The thermowell is welded to the interior of the vessel wall with an Alloy 82/182 partial penetration (J-groove) weld as illustrated in Figure 6. Alloy 82/182 butter was applied. The weld was generally performed similar to the 1-inch vent J-groove weld (See Figure 2B and Figure 6). In addition to the J-groove weld, TMI, Unit 1 had Alloy 82/182 weld boss welded to the pressure vessel O.D. surface (not wetted, see Figure 6). The weld boss was applied during the fabrication to facilitate future weld repair if needed. The materials used for the 1½-inch thermowell assembly at each unit are summarized in Table 4.

Table 4 - Originally Installed 1½-inch Thermowell Nozzle Assembly
(The pressurizer has 1 thermowell nozzle, see Figure 6)

Connection	Material
1½-inch thermowell,	Alloy 600 SB-166
Pressurizer butter for J-groove weld, WP-80	Alloy 82 or 182
Thermowell to pressurizer (I.D. side) J-groove weld, WP-81	Alloy 182
Weld boss on pressurizer (O.D.) WP-107 (not wetted by RC)	Alloy 82 or 182

5. Level Sensing Nozzles

The six 1-inch, Schedule 160 level sensing nozzles (also called level taps) are located in the pressurizer vessel consisting of two pairs of three nozzles each at high and low elevations. The nozzle bodies are of carbon steel with stainless steel weld clad on the I.D. surface. Each level sensing nozzle is joined to the carbon steel pressurizer shell with a full penetration carbon steel weld. At the top, as illustrated in Figure 7, an Alloy 600 safe-end is attached to each level-sensing nozzle with a full penetration Alloy 82 V-groove weld without butter. The materials used for the level sensing nozzle assembly are summarized in Table 5.

6. 1-inch Sampling Nozzle

The pressurizer has one 1-inch Schedule 160 sampling nozzle (also called sampling tap) connecting to a sampling line. The sampling nozzle is located at the same elevation as the 1½-inch thermowell described in Section 4. The sampling nozzle is mounted similar to the level sensing nozzles (described in Section 5 and Figure 7). The materials used for the 1-inch level sampling nozzle assembly are summarized in Table 5.

Table 5 - Originally Installed Level Sensing Nozzle and Sampling Nozzle Assembly
(The pressurizer has 6 level sensing nozzles and 1 sampling nozzle, see Figure 7)

Connection	Material
1-inch level sensing nozzle and 1-inch sampling nozzle,	SS clad carbon steel
Level sensing nozzle and sampling nozzle safe-end,	Alloy 600
Safe-end to level sensing nozzle and sampling nozzle weld, WP-63	Alloy 82

7. Pressurizer Heater Bundle

The heater belt forgings have three openings to accommodate the heater bundle assemblies. Each heater bundle is an assembly consisting of three parallel disks drilled to hold 39 individual immersion heaters as shown in Figure 9. The outermost of the three disks, the heater bundle diaphragm plate, mates with and forms a seating surface with the heater belt forging penetration. The other two discs, called support plates, are fabricated from stainless steel. Figure 10 gives a cross-sectional view of the pressurizer heater bundle assembly pressure retaining items. The heater bundle cover plates are bolted on the outer surface of the diaphragm plates, holding the diaphragm plates against the mating surface and providing support for the heater bundle assembly. As illustrated in Figure 11, a seal weld provides the pressure boundary between the heater bundle diaphragm plate and the heater belt forging. No structural credit is given for the seal weld.

The original heater bundles contain Alloy 600/182/82. The diaphragm plate is fabricated from Alloy 600 plate (SB-168). In addition, there are short heater sleeves machined from Alloy 600 bar and are attached to the inner side of the Alloy 600 diaphragm plate by an Alloy 82 partial penetration groove weld without buttering as illustrated in Figure 12. Each Type 316L stainless steel heater sheath passes through the diaphragm plate and sleeve and is attached to Alloy 600 sleeve by an Alloy 82 fillet weld shown in Figure 12. The heater bundles materials discussed in this section for each unit are summarized in Table 6.

2003 Replacement Heat Bundle

The original lower heater bundle was found leaking and was replaced in 2003. The replacement heater bundle has 12 larger diameter (1.25-inch) higher power heaters in lieu of the 39 heaters (0.66-inch) in the original heater bundle. The replacement diaphragm plate is fabricated from Type 304 stainless steel, instead of Alloy 600. Due to the original seal weld (original Alloy 600 diaphragm plate to the stainless steel cladding weld) being performed with Alloy 82 and subsequent weld repairs being performed with Alloy 152/52, the new seal weld for the replacement heater bundle diaphragm plate used Alloy 152/52. The new seal weld is illustrated in Figure 11.

Table 6 - Originally Installed Heater Bundle Nozzle Assembly
(The pressurizer has 3 heater bundles)

Alloy 600 Diaphragm Type Heater Bundle Components	**Material[a]**
Diaphragm plate, (1 per heater bundle)	Alloy 600, SB-168
Heater sheath, (39 per heater bundle)	Type 316L, SA-213
Heater sleeve, (39 per heater bundle)	Alloy 600, SB-166
Diaphragm plate seal (Field) weld (1 per heater bundle)	Alloy 82 or 182
Heater sleeve to diaphragm plate weld, WP-119 (39 per heater bundle)	Alloy 82
Heater sheath to diaphragm plate weld, WP-120 (39 per heater bundle)	Alloy 82
Castellated seal nuts to diaphragm plate tack weld, WP-126	Alloy 82

Table 7 - Replacement Heater Bundle Nozzle Assembly

Stainless Steel Diaphragm Type Heater Bundle	Material [b]
Diaphragm plate, (3 per pressurizer)	Stainless Steel
Heater sheath, (12 per heater bundle)	Stainless Steel
Diaphragm plate seal (Field) Weld (1 per heater bundle)	Alloy 52/152
Heater sheath to diaphragm plate weld, WP-121 (WP-123 for DB)	Stainless Steel Weld

(a) The two original bundles for the original lower heater bundle.
(b) The replacement heater bundle for the original lower heater bundle

8. Post-Weld Stress Relief Heat Treatment

The post-weld stress relieve heat treatment (PWHT) of pressurizer connections were typically performed at 1100–1150°F. Based on information from the vendor, the Alloy 600 heater bundle diaphragm plates and heater sleeves did not receive any PWHT. In addition, none of the field welds performed either at the time of the original pressurizer installation or during field repair and modification would have received any PWHT. This includes the following known replacement or field repairs:

- The heater bundle diaphragm plate to shell cladding seal weld (including the replacement heater bundle in 2003).
- All welds connecting the nozzles (or safe-ends) to external piping.

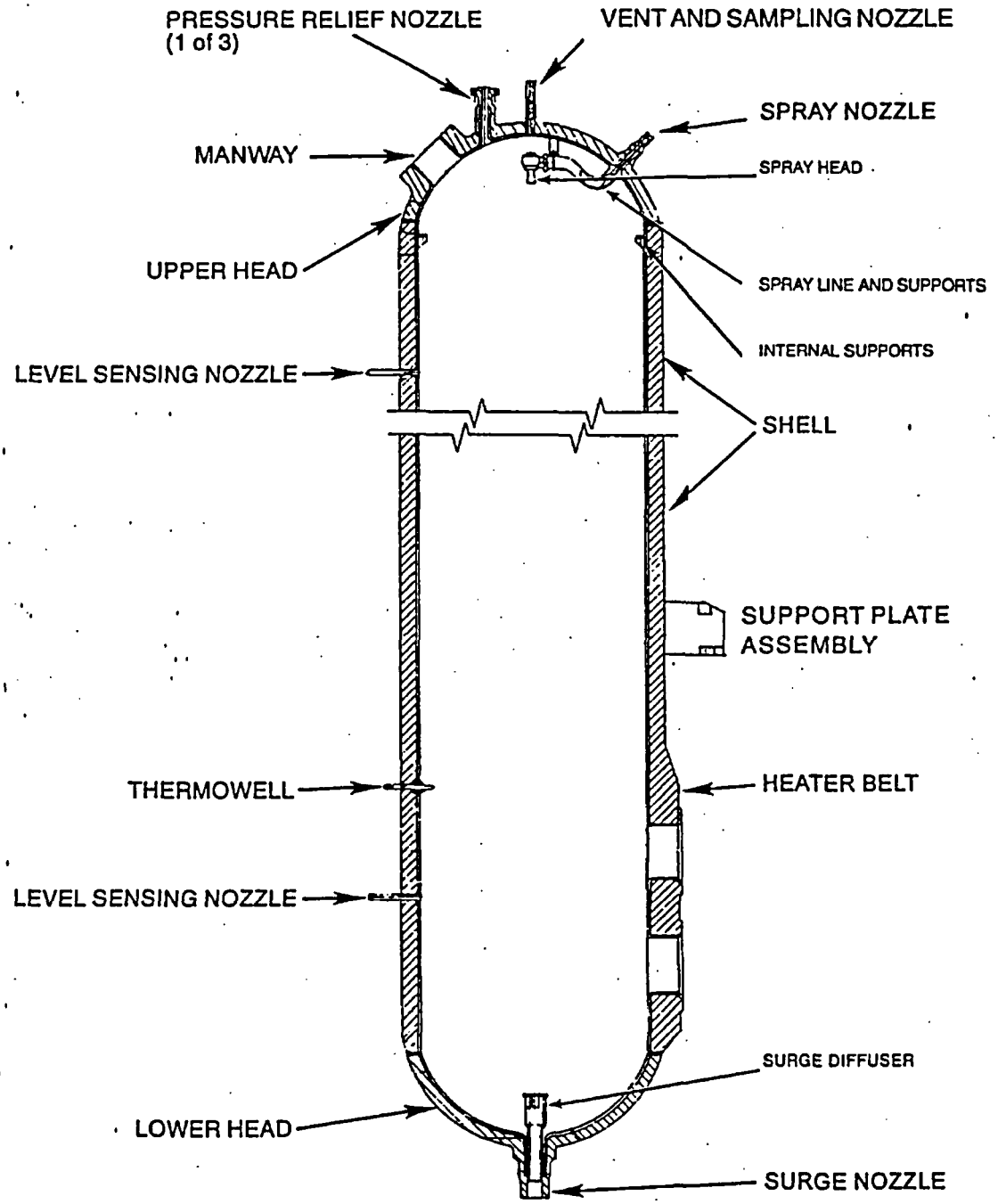

Figure 1 - The general arrangement of pressurizer penetrations at B&W 177-FA units. TMI, Unit 1 also has 36 internal stainless steel ladder rungs welded to the I.D. surface of the pressurizer vessel.

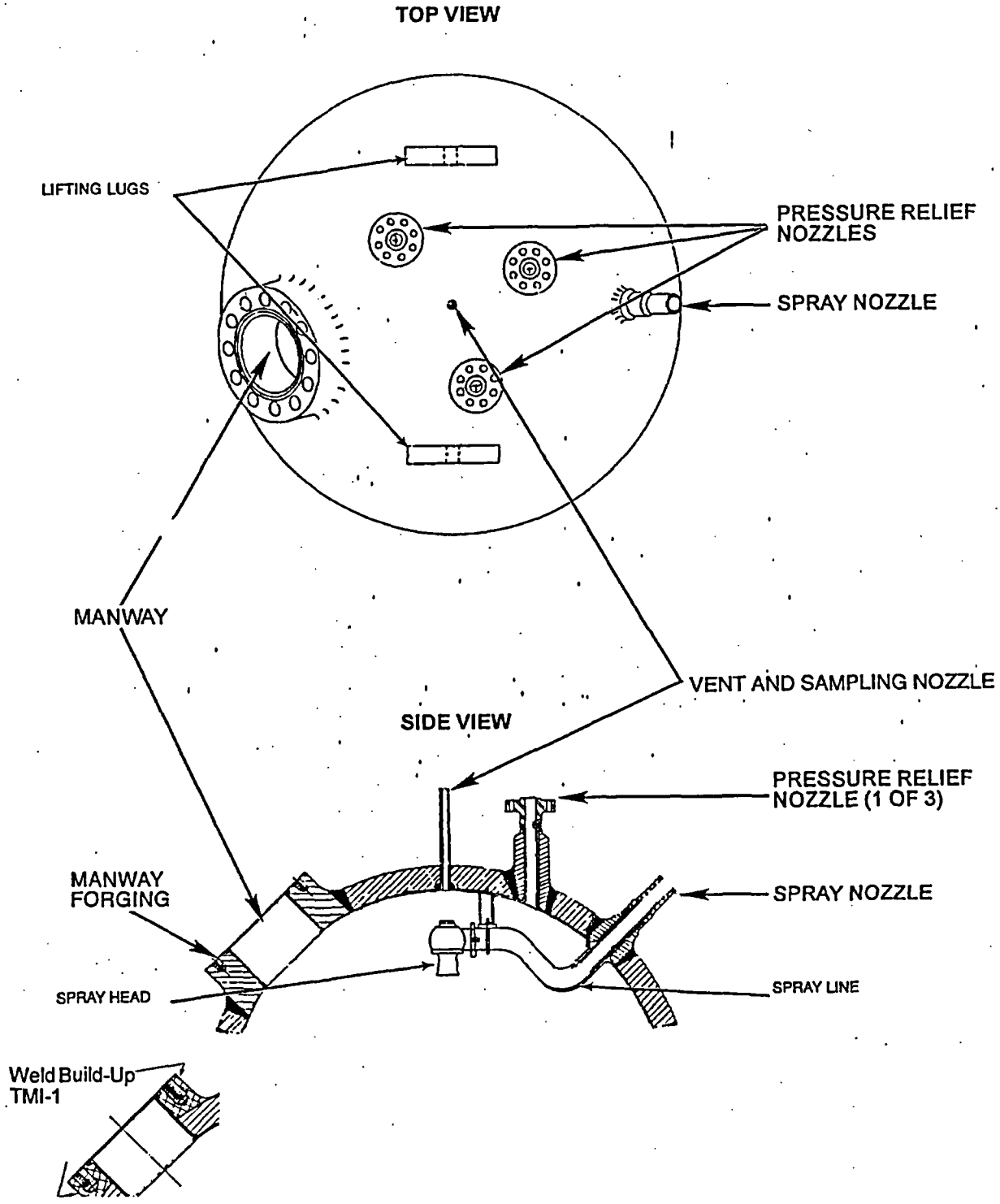

Figure 2A - Penetrations at the upper head of pressurizer vessel. Note, the manway boss was weld buildup at TMI-1, instead of a forging.

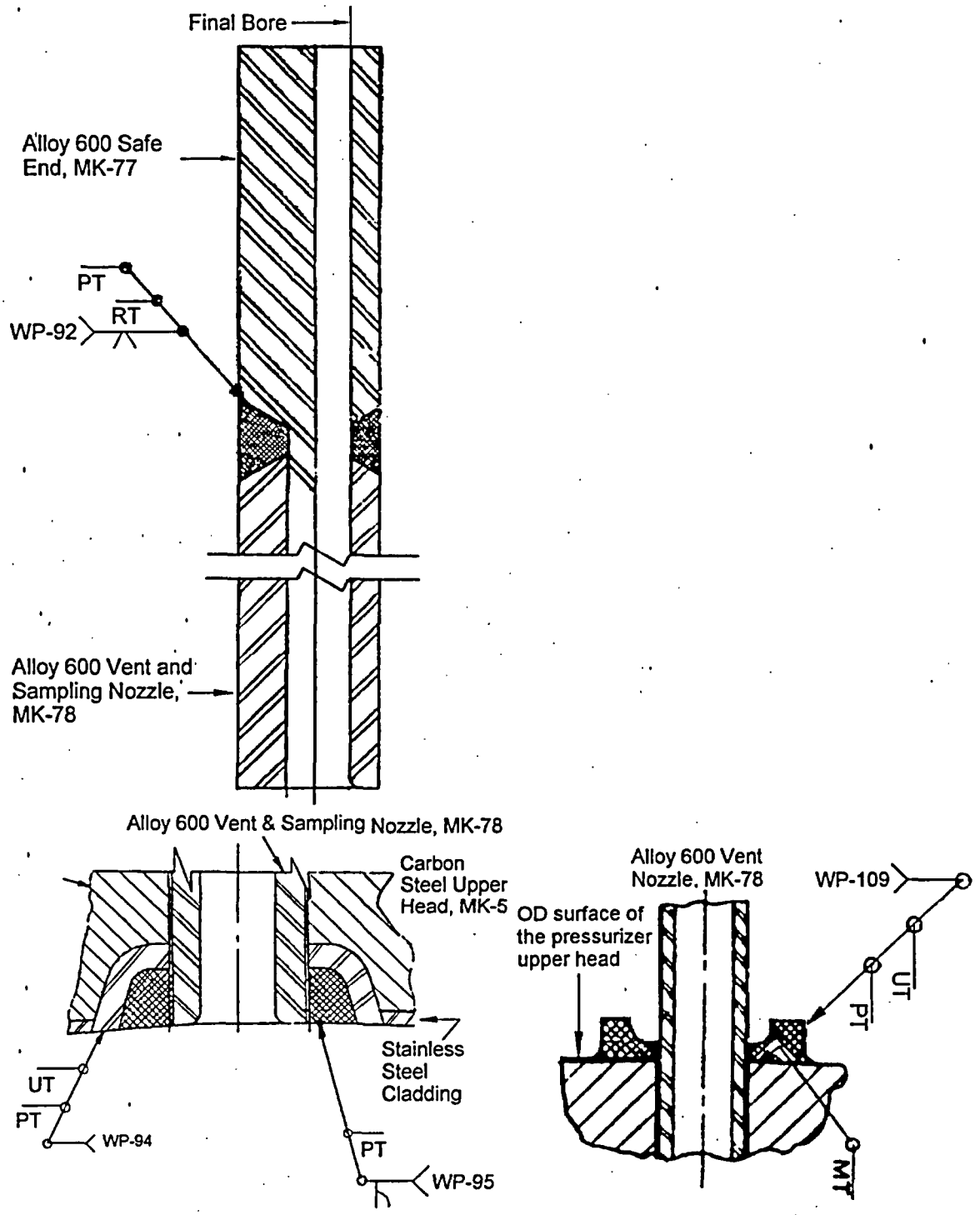

Figure 2B - Top, 1-inch Schedule 160 Alloy 600 vent to Alloy 600 safe-end weld. Bottom, detail of the 1-inch vent and sampling nozzle to pressurizer upper head J-groove weld and weld boss (not wetted by RC).

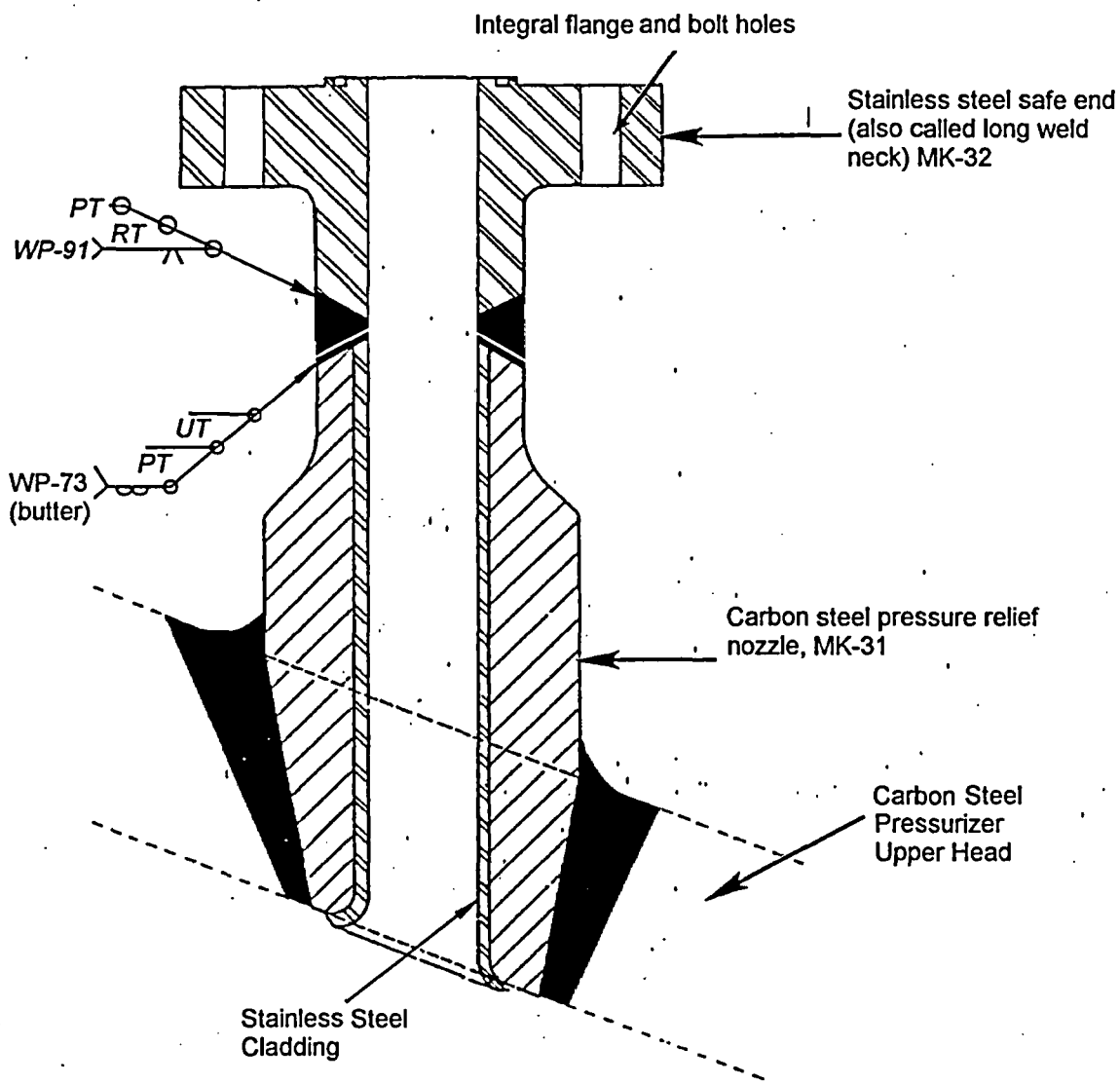

Figure 3 - Detail of the three 2½-inch pressure relief nozzle to stainless steel safe-end weld.

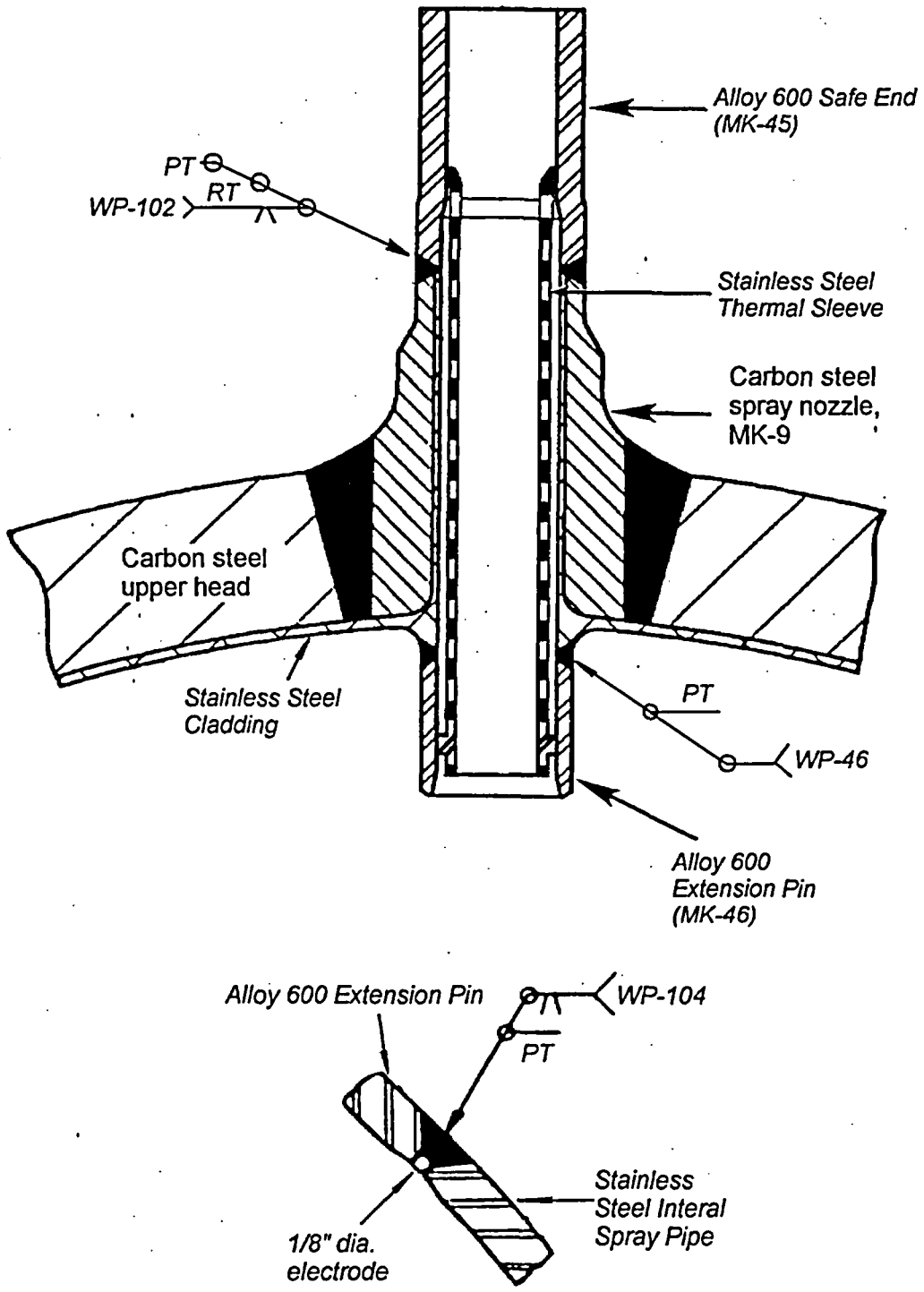

Figure 4 - Top, detail of the 4-inch spray nozzle assembly. Bottom, detail of the extension pin to the internal spray pipe weld. See Figure 5 for detail of the weld buttons for positioning the thermal sleeve.

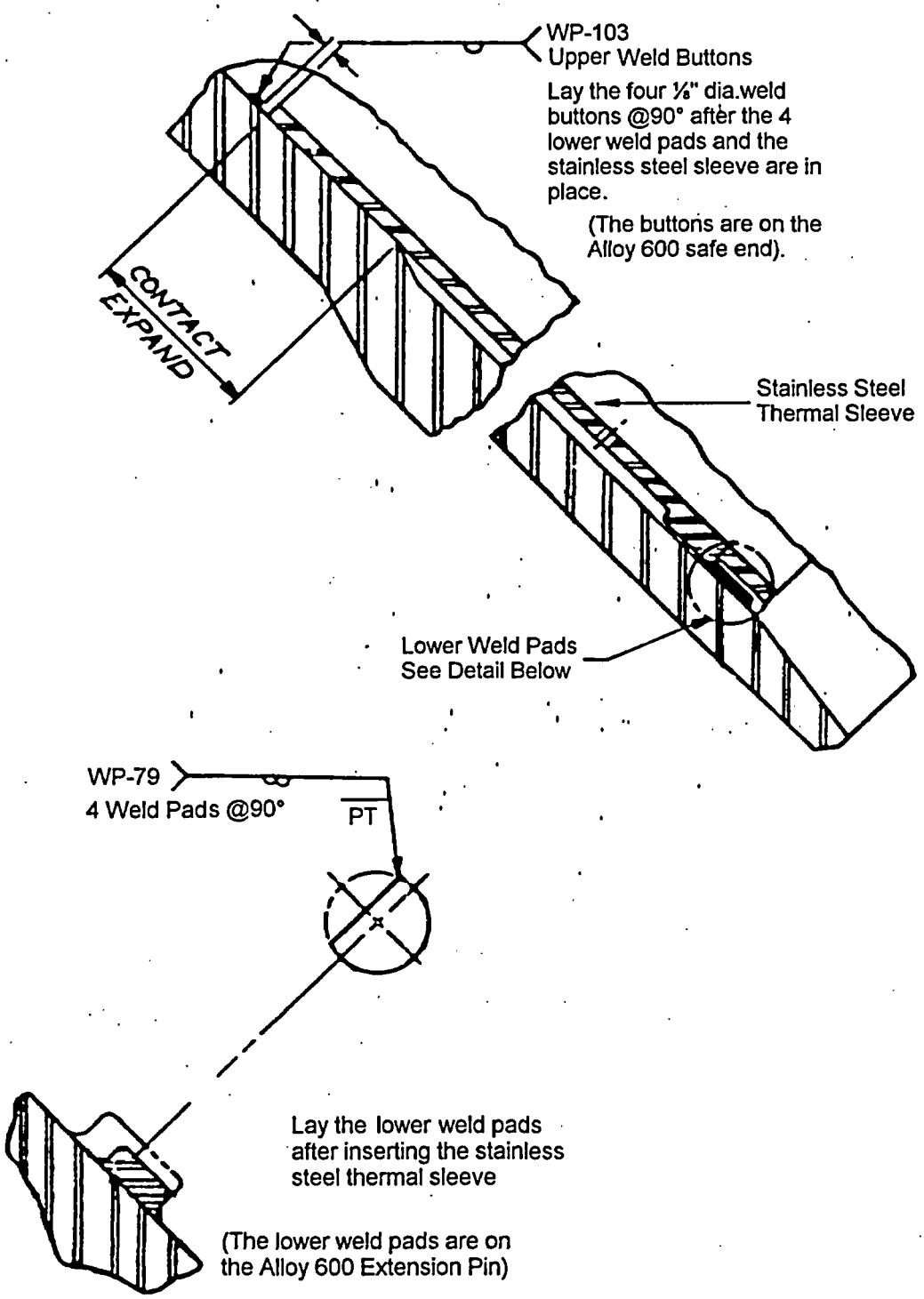

Figure 5 - Detail of the weld buttons for positioning the stainless steel thermal sleeve inside the 4-inch spray nozzle.

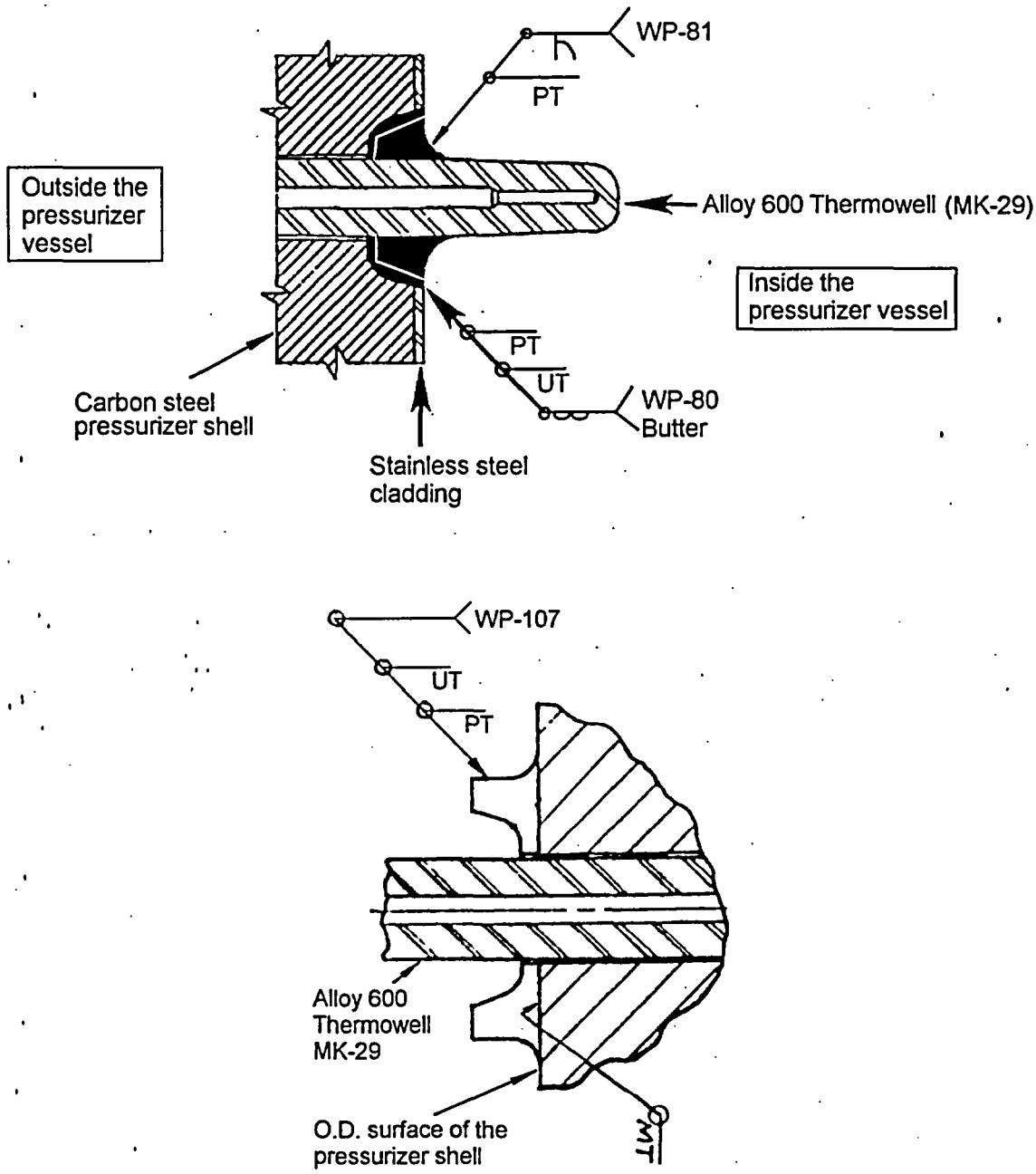

Figure 6 - Top, detail of the 1½-inch thermowell nozzle to the pressurizer shell I.D. surface J-groove weld. Bottom, detail of the weld boss (not wetted) to the pressurizer shell O.D. surface. The weld boss was intended for future welding replacement thermowell nozzle if needed.

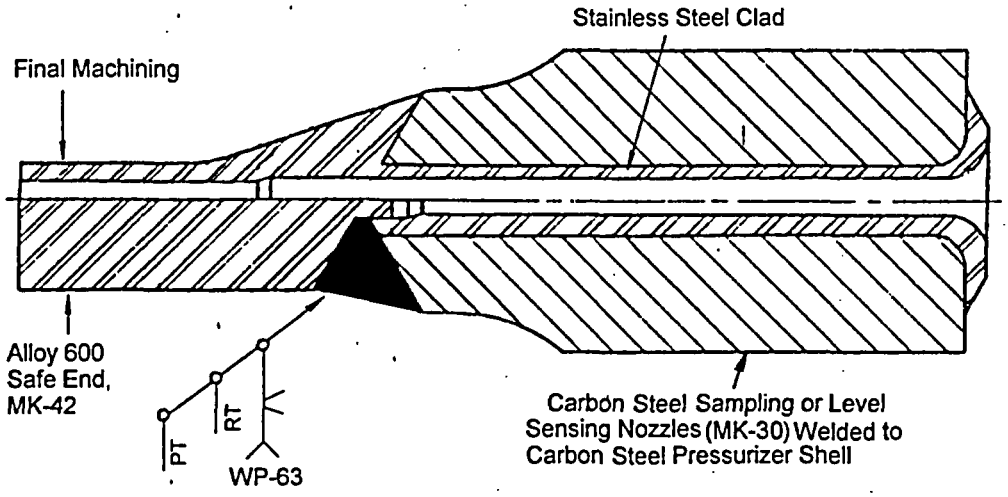

Figure 7 - Detail of the 1-inch level sensing nozzle or 1-inch sampling nozzle to Alloy 600 safe-end weld.

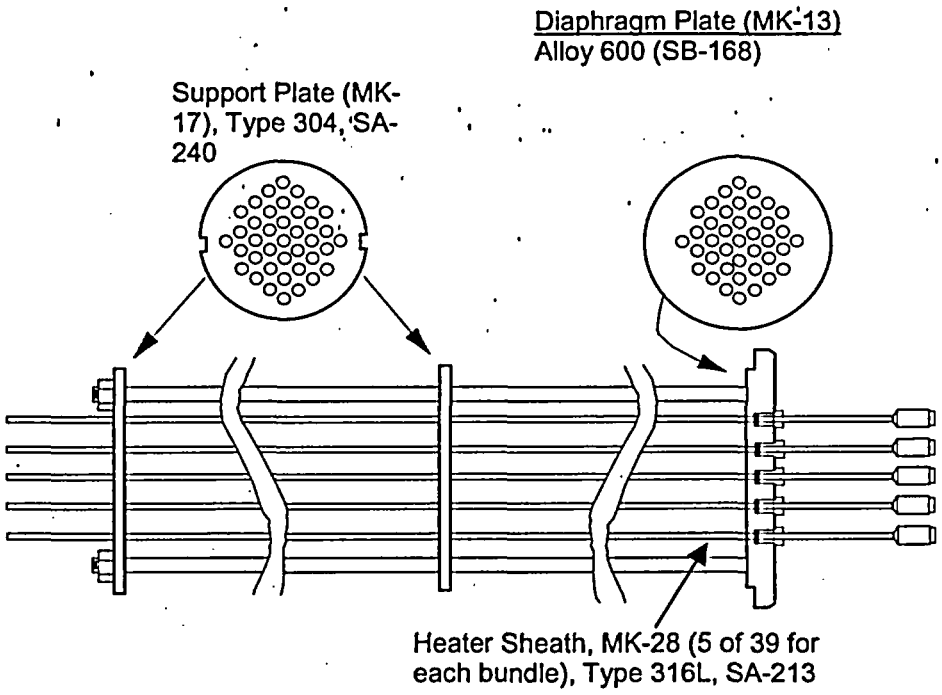

Figure 8 - Original Heater Bundle Assembly.

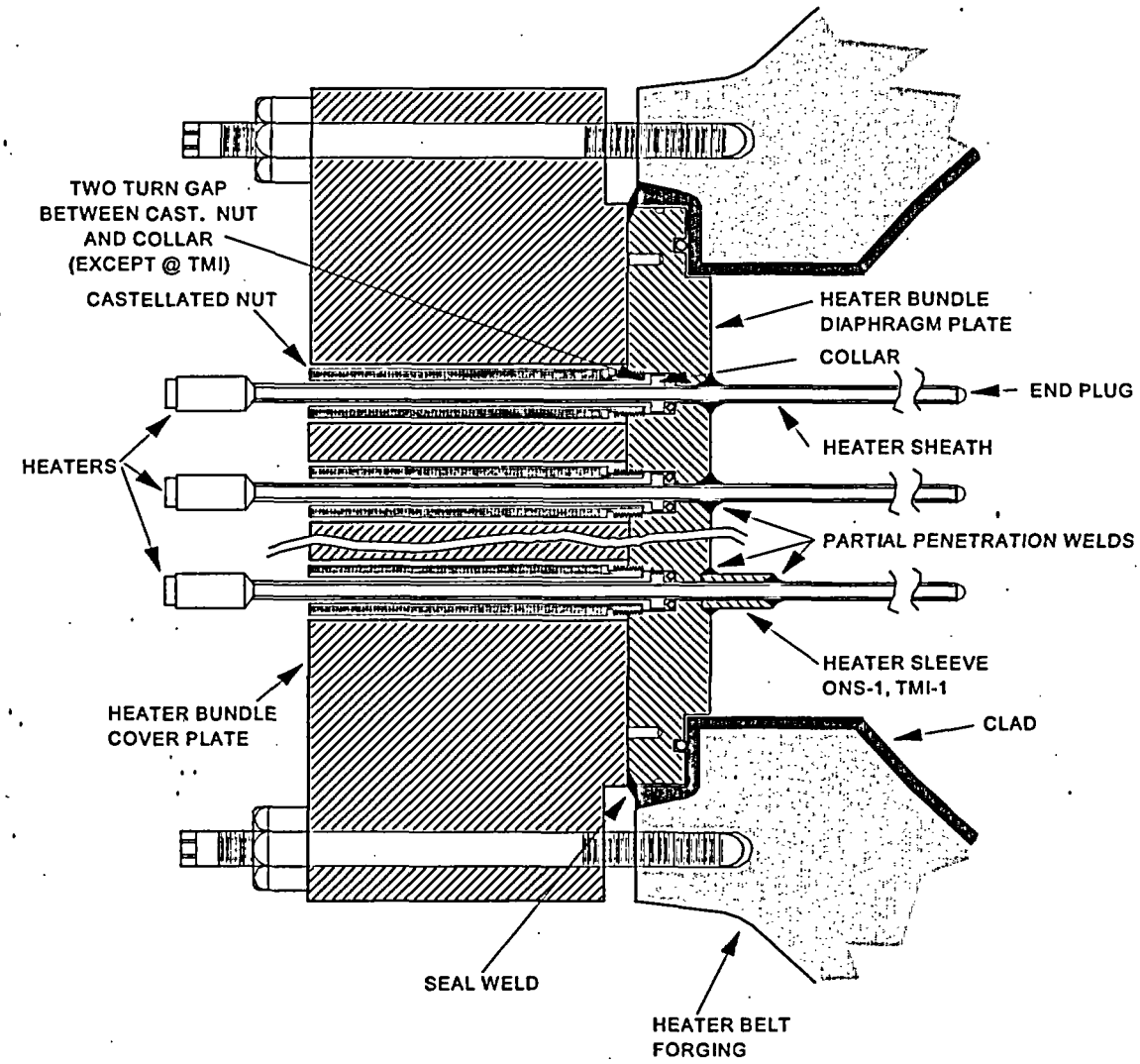

Figure 9 - Cross sectional view of the original heater bundle assembly.

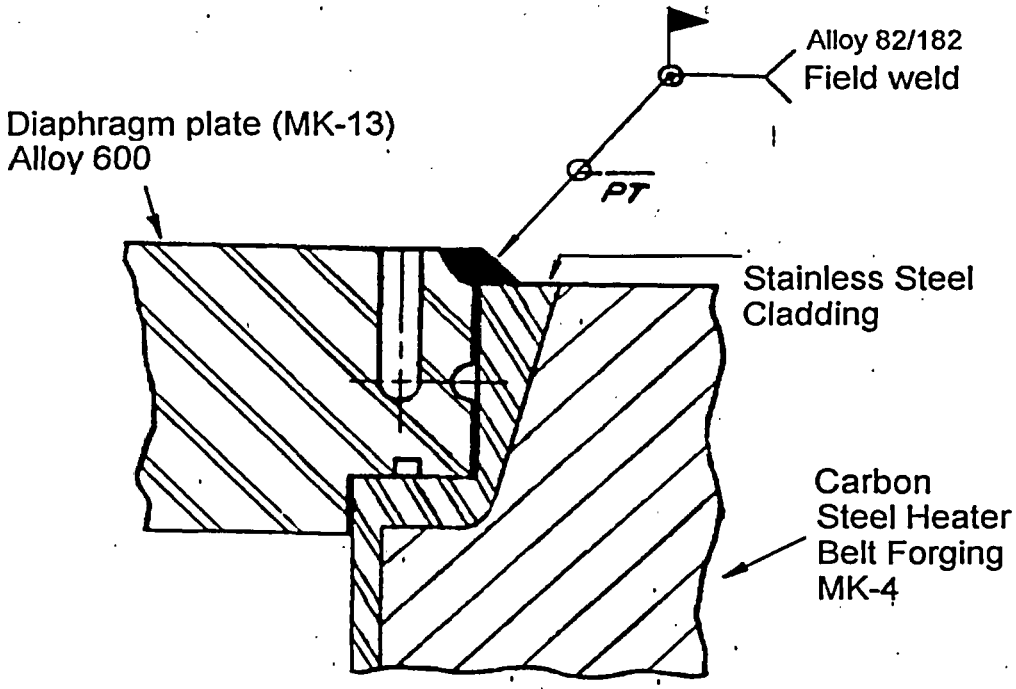

Figure 10 - Detail of the Alloy 600 diaphragm plate to stainless steel cladding seal weld (Alloy 82/182) for the original heater bundles.

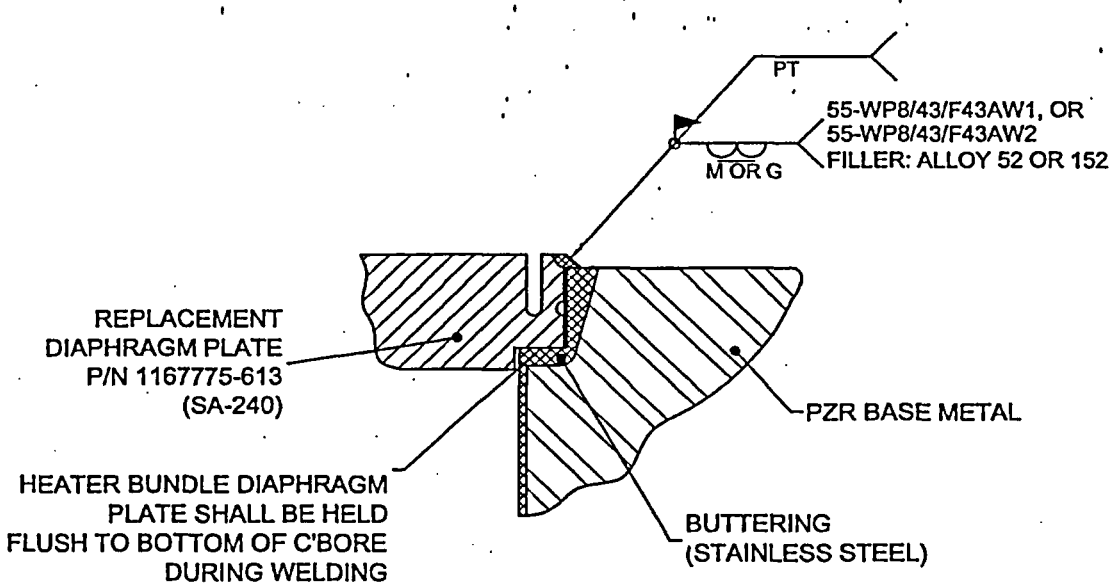

Figure 11 - Detail of the stainless steel diaphragm plate to stainless steel cladding seal weld for the replacement lower heater bundle in 2003. The weld metal is Alloy 52/152.

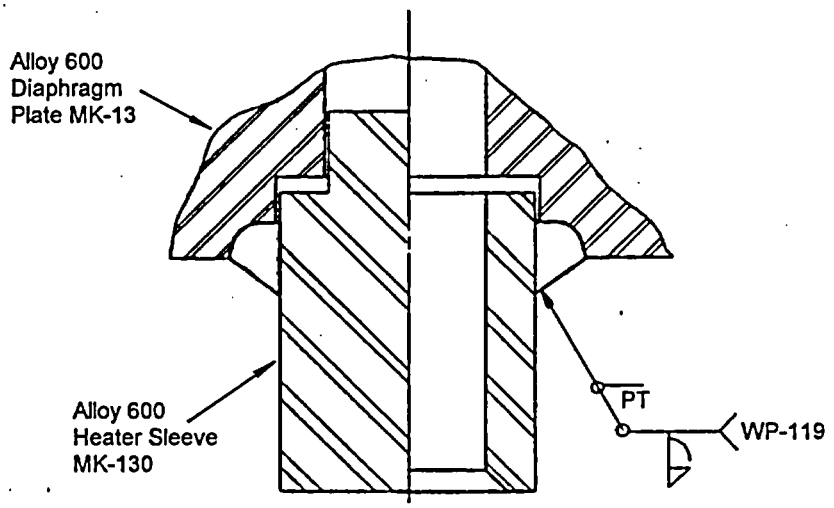

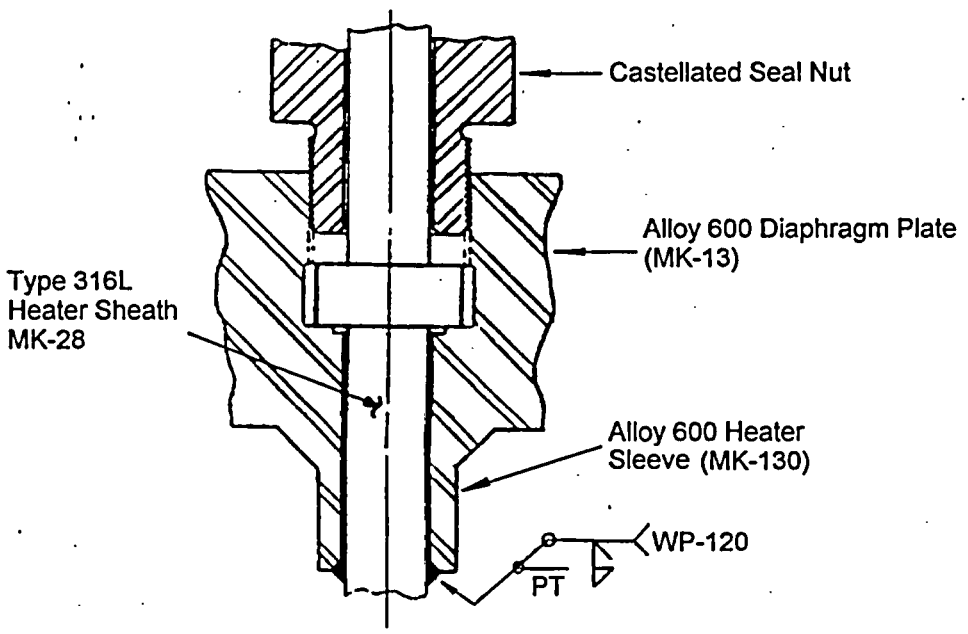

Figure 12 - Top, detail of the Alloy 600 heater sleeve to the Alloy 600 diaphragm plate weld Bottom, detail of the Type 316L heater sheath to the Alloy 600 heater sleeve.

Requested Information 1 (b)

A description of the inspection program for Alloy 82/182/600 pressurizer penetrations and steam space piping connections that has been implemented at your plant. The description should include when the inspections were performed; the areas, penetrations and steam space piping connections inspected; the extent (percentage) of coverage achieved for each location which was inspected; the inspection methods used; the process used to resolve any inspection findings; the quality of the documentation of the inspections (e.g., written report, video record, photographs); and, the basis for concluding that your plant satisfies applicable regulatory requirements related to the integrity of pressurizer penetrations and steam space piping connections. If leaking pressurizer penetrations or steam space piping connections were found, indicate what followup NDE was performed to characterize flaws in the leaking penetrations.

Response:

The Alloy 82/182/600 pressurizer penetration and steam space connections at TMI are limited to the thirteen carbon steel nozzles to alloy 600/82/182 welded safe-end connections and the two alloy to stainless steel field weld connections. Of the fifteen welded connections, only five are subject to inservice inspection examinations as a result of their size or connection type. Two of the welds (4-inch spray nozzle and spray nozzle safe-end to stainless field weld connection) subject to the actions of this bulletin have had volumetric and surface examinations performed in accordance with the requirements of the American Society of Mechanical Engineers (ASME) Boiler and Pressure Vessel Code, Section XI, "Rules for Inservice Inspection of Nuclear Power Plant Components," Code Category B-F, Code Item number B5.40, in the 2nd and 3rd ISI intervals for the 4-inch spray nozzle weld and Code Item B5.130 in the 2nd interval for the spray nozzle safe-end to stainless field weld. The remaining three welds subject to this bulletin were examined in accordance with the requirements of the ASME Code Section XI, Code Category B-F, Code Item number B5.50 during the 2nd ISI Interval. The ISI examinations performed during the 2nd ISI Interval were done in accordance with the 1986 Edition of the ASME Code Section XI. The ISI examination performed during the 3rd Interval was done in accordance with the 1995 Edition of the ASME Code through the 1996 Addenda.

TMI, Unit 1 is now in the 3rd Interval with the ISI program, and complies with the 1995 Edition through the 1996 Addenda of the ASME Code Section XI. In a safety evaluation report dated November 7, 2003, the NRC approved the use of a risk-informed methodology for the selection and examination of ASME Code Class 1 and Code Class 2 piping welds. However, none of the subject pressurizer safe-end welds have been re-examined under the risk-informed ISI program. In addition, two welds (4-inch spray nozzle and spray nozzle safe-end to stainless field weld connection) have had a volumetric examination performed in accordance with Supplement 10 to Appendix VIII of the ASME Code Section XI since its implementation in November of 2002.

All examinations, surface and volumetric, were recorded on hard copy data sheets. No video or photographs were used to supplement these examinations. There have been no recordable indications on these five welds that required disposition. All surface

examinations covered 100% of the required examination area. The ultrasonic examinations, although partially obstructed in some cases, achieved greater than 90% of the required examination volume coverage.

In addition to the nondestructive examinations listed below, all steam space pressurizer Alloy 82/182 welds were visually examined each refueling outage, at a minimum, in accordance with the pressure test requirements of the ASME Code Section XI, Category B-P.

The following is a listing of the previous inspections:

Weld RCT0002PR0009BMWELD (4-inch spray nozzle) This weld was first examined in October 2001. The weld was examined by dye penetrant and by ultrasonic methods. The ultrasonic examination was performed using 30 degree and 45 degree shear wave, and 45 degree longitudinal wave transducers. There were no indications recorded from either the dye penetrant or ultrasonic examinations; therefore, no disposition was required.

This weld was examined again in November 2003 as part of an expanded scope inspection. The weld was examined by dye penetrant and by ultrasonic (UT) methods. The UT examination was performed using performance demonstration initiative (PDI) qualified 60 degree longitudinal/dual, 45 degree shear/single, and 45 degree longitudinal/dual techniques. There were no indications recorded from either the dye penetrant or for the ultrasonic examinations.

Weld RCT0002PR0008BMWELD (2½-inch pressure relief nozzle) This weld was examined in September 1997. The weld was examined by the dye penetrant method. There were no indications recorded from this examination.

Weld RCT0002PR0007BMWELD (2½-inch pressure relief nozzle) This weld was examined in September 1997. The weld was examined by the dye penetrant method. There were no indications recorded from this examination.

Weld RCT0002PR0006BMWELD (2½-inch pressure relief nozzle) This weld was examined in September 1997. The weld was examined by the dye penetrant method. There were no indications recorded from this examination.

Weld SP0021BMWELD (4-inch safe-end to stainless steel component field weld) This weld was examined in September 1999. The weld was examined by the dye penetrant and ultrasonic methods. There was one geometric indication outside the weld that was recordable.

Basis for Concluding Regulatory Requirements are Satisfied

As stated above, the TMI, Unit 1 pressurizer connections affected by this bulletin are limited to the 13 Alloy 82/182 full penetration nozzle to safe-end welds and two safe-end to stainless steel field welds. The completion of volumetric, surface, and visual examinations required by the ASME Code Section XI without any evidence of

recordable, relevant indications, or through-wall leakage of the carbon steel surface, is assurance of the previous integrity of the Alloy 82/182 connections.

The specific regulatory requirements are listed below with the associated response addressing how the requirement is met.

Compliance with Design Requirements: 10 CFR 50, Appendix A – General Design Criteria (GDC)

Criterion 14 – Reactor Coolant Pressure Boundary

> *"The reactor coolant pressure boundary shall be designed, fabricated, erected and tested so as to have an extremely low probability of abnormal leakage, of rapidly propagating failure, and of gross rupture."*

The TMI, Unit 1 pressurizer connections are designed, fabricated, tested, and examined in accordance with the requirements of the ASME Code Section III, "Requirements for Design and Manufacture of Nuclear Power Plant Components," and the ASME Code Section XI. In general, the controls established by these construction and inspection codes assures that the reactor vessel maintains an extremely low probability of rapidly propagating failure and gross rupture.

The BMV examination technique to be used in the TMI, Unit 1, Fall 2005 refueling outage is a reliable means for identifying the very low leakage rates potentially associated with Alloy 82/182 cracking. Therefore, based on the design, materials, and examination methods, the TMI, Unit 1 pressurizer continues to comply with the requirements of GDC 14.

In addition, in the case of the pressurizer steam space Alloy 82/182 locations, appropriate mitigation will be performed to provide added assurance that these connections will have an extremely low probability of abnormal leakage, of rapidly propagating failure, and of gross rupture.

Criterion 31 – Fracture Prevention of Reactor Coolant Pressure Boundary

> *"The reactor coolant pressure boundary shall be designed with sufficient margin to assure that when stressed under operating, maintenance, testing, and postulated accident conditions (1) the boundary behaves in a non-brittle manner, and (2) the probability of rapidly propagating fracture is minimized. The design shall reflect consideration of service temperatures and other conditions of the boundary material under operating, maintenance, testing and postulated accident conditions and the uncertainties in determining (1) material properties, (2) the effects of irradiation on material properties, (3) residual, steady state and transient thermal stresses, and (4) size of flaws."*

The reactor coolant pressure boundary is designed with sufficient margin to assure that when stressed under operating, maintenance, testing, and postulated accident

conditions, the boundary behaves in a non-brittle manner, and the probability of rapidly propagating fracture is minimized.

Criterion 32 – Inspection of Reactor Coolant Pressure Boundary

> *"Components which are part of the reactor coolant pressure boundary shall be designed to permit (1) periodic inspection and testing of important areas and features to assess their structural and leak tight integrity, and (2) an appropriate material surveillance program for the reactor pressure vessel."*

The TMI, Unit 1 pressurizer connections described in this bulletin, which are part of the reactor coolant pressure boundary (RCPB), were designed to accommodate the visual, surface, and volumetric examination requirements of the ASME Code Section XI. Ongoing ASME Code Section XI examinations will ensure the continued structural and leak tight integrity of these connections.

Compliance with Operating Requirement: 10 CFR 50.36 - Plant Technical Specifications

TMI, Unit 1 Technical Specifications include requirements and associated action statements addressing reactor coolant leakage. The TMI, Unit 1 Technical Specification limits for reactor coolant operational leakage are one gallon per minute (gpm) for unidentified leakage, 10 gpm for identified leakage, and no reactor coolant system strength boundary leakage (reference TMI, Unit 1 Technical Specifications 3.1.6, "Leakage"). Compliance with the zero non-isolable leakage criteria is met by conducting inspections and repairs in accordance with ASME Code, Section XI, and 10 CFR 50.55a, "Codes and standards," as described below.

Compliance with Inspection Requirements: 10 CFR 50.55a and the ASME Code Section XI

10 CFR 50.55a, "Codes and standards," requires that inservice inspection and testing be performed in accordance with the requirements of the ASME Code, Section XI, "Inservice Inspection of Nuclear Plant Components." Section XI contains applicable rules for examination, evaluation, and repair of code class components, including the RCPB.

Compliance with Quality Assurance Requirements: 10 CFR 50, Appendix B

Criterion V of Appendix B to 10 CFR 50

> *Activities affecting quality shall be prescribed by documented instructions, procedures, or drawings, of a type appropriate to the circumstances and shall be accomplished in accordance with these instructions, procedures, or drawings. Instructions, procedures, or drawings shall include appropriate quantitative or qualitative acceptance criteria for determining that important activities have been satisfactorily accomplished.*

The ASME Code Section XI required visual examinations are performed using procedures that contain specific acceptance criteria or detailed recording criteria that are subsequently evaluated for acceptability. The visual examinations are performed using detailed instructions with a combination of qualitative and quantitative standards for the essential examination variables. Examinations of the pressurizer steam space Alloy 82/182 connections will be performed using standardized AmerGen procedures, which include appropriate acceptance criteria.

Criterion IX of Appendix B to 10 CFR 50

> *Criterion IX of Appendix B to 10 CFR 50 states that special processes, including nondestructive testing, shall be controlled and accomplished by qualified personnel using qualified procedures in accordance with applicable codes, standards, specifications, criteria, and other special requirements.*

The pressurizer examinations at will be performed by certified Level II or Level III VT-2 examiners using AmerGen approved procedures with additional detailed instructions as necessary.

Criterion XVI of Appendix B to 10 CFR Part 50

> *Criterion XVI of Appendix B to 10 CFR Part 50 states that measures shall be established to assure that conditions adverse to quality are promptly identified and corrected. For significant conditions adverse to quality, the measures taken shall include root cause determination and corrective action to preclude repetition of the adverse conditions.*

The identification of an unacceptable visual indication requires repair, replacement or acceptance by analytical evaluation. In all cases, these indications would be tracked by the TMI, Unit 1 Corrective Action Program (CAP).

Requested Information 1 (c)

A description of the Alloy 82/182/600 pressurizer penetration and steam space piping connection inspection program that will be implemented at your plant during the next and subsequent refueling outages. The description should include the areas, penetrations and steam space piping connections to be inspected; the extent (percentage) of coverage to be achieved for each location; inspection methods to be used; qualification standards for the inspection methods and personnel; the process used to resolve any inspection indications; the inspection documentation to be generated; and the basis for concluding that your plant will satisfy applicable regulatory requirements related to the structural and leakage integrity of pressurizer penetrations and steam space piping connections. If leaking pressurizer penetrations or steam space piping connections are found, indicate what followup NDE will be performed to characterize flaws in the leaking penetrations. Provide your plans for expansion of the scope of NDE to be performed if

circumferential flaws are found in any portion of the leaking pressurizer penetrations or steam space piping connections.

Response:

TMI, Unit 1 will be performing a 100% bare metal visual (BMV) examination of the affected pressurizer penetrations described in this bulletin during the next refueling outage. The visual examinations will be performed by certified Level II/III VT-2 visual examiners. In addition, TMI, Unit 1 will continue to perform this BMV examination in each subsequent refueling outage until appropriate mitigation has been implemented to eliminate the PWSCC susceptibility. Currently, plans are being developed to mitigate susceptible pressurizer upper head locations. TMI, Unit 1 will evaluate the source of any indications and resolve inspection indications.

The affected pressurizer connections described in this bulletin have met, and will continue to meet, all requirements related to the structural and leakage integrity of the RCPB. This is assured by compliance with the examination requirements of the ASME Code Section XI and the augmented examinations performed in accordance with this bulletin.

If a leaking penetration is found, a determination would be made, based on the location and nature of the indication, if additional NDE examinations will be performed and the type of repair methodology that will be utilized. In the evaluation required by the corrective action program, a determination would be made as to the extent of scope expansion and the type of NDE to be performed. Depending on the particulars of the indication, a best effort ultrasonic examination would be performed to characterize the flaw in the leaking penetration and to assess the condition of the other connections.

The basis for concluding that TMI, Unit 1 satisfies applicable regulatory requirements related to the structural and leakage integrity of the affected pressurizer connections described by this bulletin is provided above in the "Basis for Concluding Regulatory Requirements are Satisfied" section of the question 1(b) response.

Requested Information 1 (d)

In light of the information discussed in this bulletin and your understanding of the relevance of recent industry operating experience to your facility, explain why the inspection program identified in your response to item (1)(c) above is adequate for the purpose of maintaining the integrity of your facility's RCPB and for meeting all applicable regulatory requirements which pertain to your facility.

Response:

As stated in response to question 1(c) above, TMI, Unit 1 will be performing a BMV examination of the affected pressurizer penetrations described in this bulletin during the next refueling outage. The visual examinations will be performed by certified Level II/III VT-2 visual examiners. In addition, TMI, Unit 1 will continue to perform BMV examinations in each subsequent refueling outage until appropriate mitigation has been implemented to eliminate the PWSCC susceptibility.

The basis for concluding that TMI, Unit 1 BMV examinations meet applicable regulatory requirements related to the structural and leakage integrity is provided above in the "Basis for Concluding Regulatory Requirements are Satisfied" section of the question 1(b) response.