HANDOUT FOR
NRC MEETING WITH NEI
ON THE CIPIMS

R. J. Bell
J. W. Winters
April 1, 2004

NEI Objectives

Explain and agree with NRC on PERT format, nomenclature and content
Explain and agree with NRC on schedule report format, nomenclature and content
Explain and agree with NRC on activity selection for CIPIMS demonstration
Obtain initial definition of level of detail for demonstration
Obtain initial definition of data to be transferred and its format

PERT REVIEW USING
EXAMPLE OF OVERALL PROJECT

Definitions shown on example:

Activity ID
- Building or type, level, area, category, system or commodity, serial number

Activity Name

Date Reference
- First Nuclear Island Basemat Concrete on January 1, 2000 (1/1/00)

Schedule Assumptions
- Dates are determined by first concrete and logic
- 5 working days per week
- 10 holidays

Early Start

Total Float (2 ways)
- Days
- Bar

Tagging Nomenclature
- I = ITAAC Activity (directly)
- R = Reference Activity for schedule context

Primavera Version 3.1

Activity ID	Activity Description	Orig Dur	Early Start	Early Finish	NRC
L1000GW040	COL APPLICATION & ENVRNMNTL REPORT TO NRC	63	12JUN96	15JAN98	R
P1000GW000	START - RELEASE TO BEGIN PROCUREMENTS	0	22AUG97		R
L8005GE010	START - SITE SELECTED	0	22AUG97	21AUG97	R
Y0123GC000	YARD AREAS - START, CONSTRUCTION FACILITIES	0	01JUL98*		R
Y0123XE010	SITE - CLEARING AND GRUBBING	30	01JUL98	12AUG98	R
Y0223GC001	YARD AREAS - START, PERMANENT SITE FACILITIES	0	09OCT98		R
L1000GW100	NRC ISSUE COL	21	27JUL99	24AUG99	R
L1000GW105	APPLICANT RECEIVES COL	1	25AUG99	25AUG99	R
N0003CC000	PLACE CONCRETE NUCLEAR ISLAND BASEMAT	2	03JAN00*	04JAN00	R
L1IT210091	ITAAC 2.10.9.1 - TGS Functional Arrang TGS1	0		22MAY01	I
L1IT30302A	ITAAC 3.3.2.a) - NI Structures Deviations STR2	0		15MAR02	I
L1000GW175	ISSUE FEDERAL REGISTER NOTICE FOR FUEL LOAD	5	01AUG02	07AUG02	R
S0RX9FT001	FUEL LOAD	23	09OCT02	31OCT02	R
S0RX9ZA999	MILESTONE - FUEL LOAD COMPLETE	0		31OCT02	R
C1009TN072	COMMERCIAL OPERATION	0	15APR03	14APR03	R

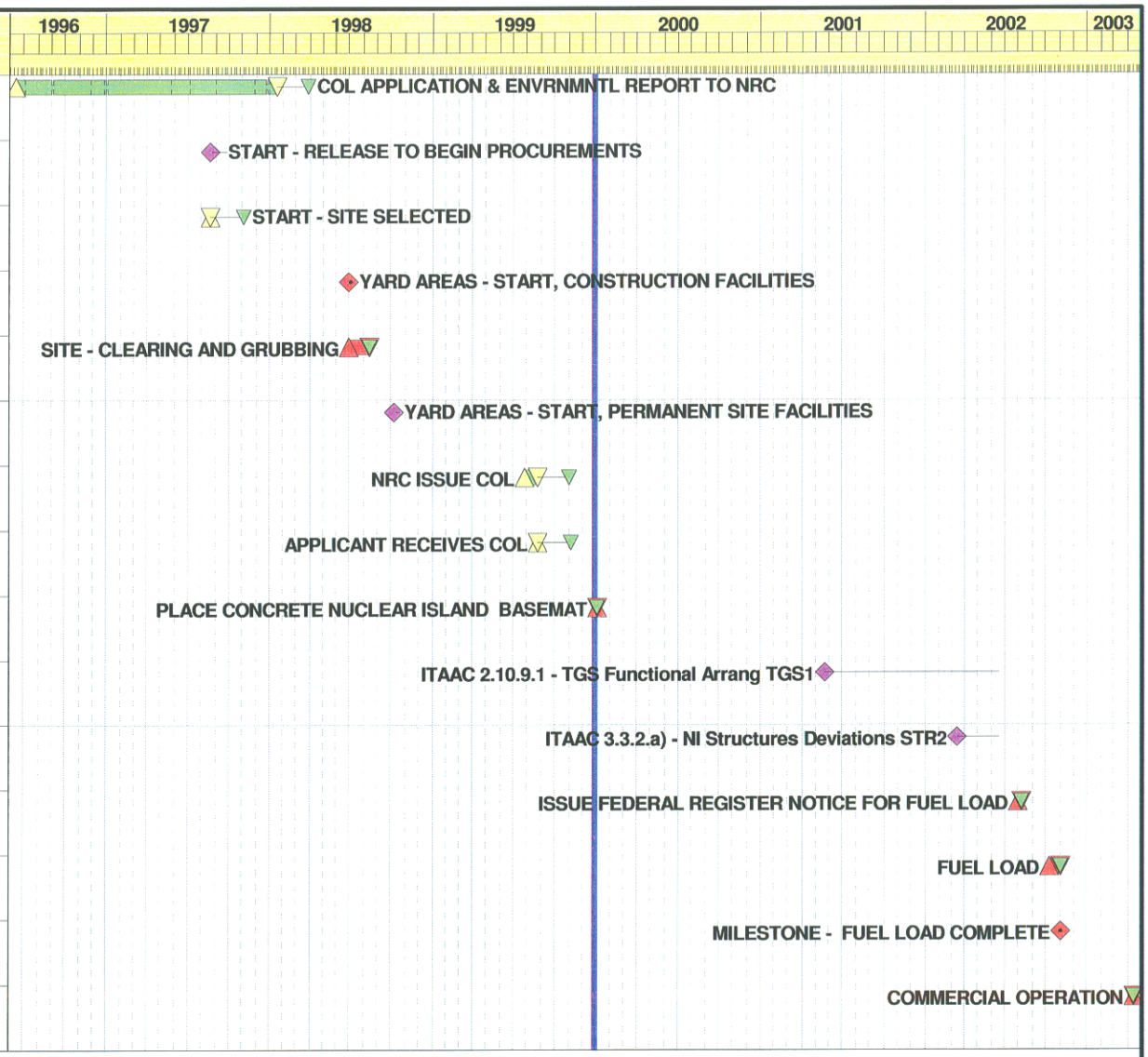

Start Date	01JAN93
Finish Date	16APR03
Data Date	01JAN00
Run Date	30MAR04 09:51

Early Bar
Float Bar
Progress Bar
Critical Activity

© Primavera Systems, Inc.

CIMS

Sheet 1 of 1

CIPIMS/ITAAC DEMONSTRATION SCHEDULE

COL AFTER PLANT ORDER
BUT BEFORE FIRST NI REBAR

SELECTED ITAAC STR2 & TGS1

TGS1

ITAAC

PERT with Predecessors and Successors

Data Report with:

- Activity information and data
- Predecessors and Successors

Table 2.10.9 Turbine Gland Seal System

Inspections, Tests, Analyses and Acceptance Criteria		
Design Commitment	**Inspections, Tests, Analyses**	**Acceptance Criteria**
1. The basic configuration of the TGS System is as shown on Figure 2.10.9.	1. Inspections of the as-built system will be conducted.	1. The as-built TGS System conforms with the basic configuration shown on Figure 2.10.9.
2. Main control room displays provided for the TGS System are as defined in Section 2.10.9.	2. Inspections will be performed on the main control room displays for the TGS System.	2. Displays exist or can be retrieved in the main control room as defined in Section 2.10.9.

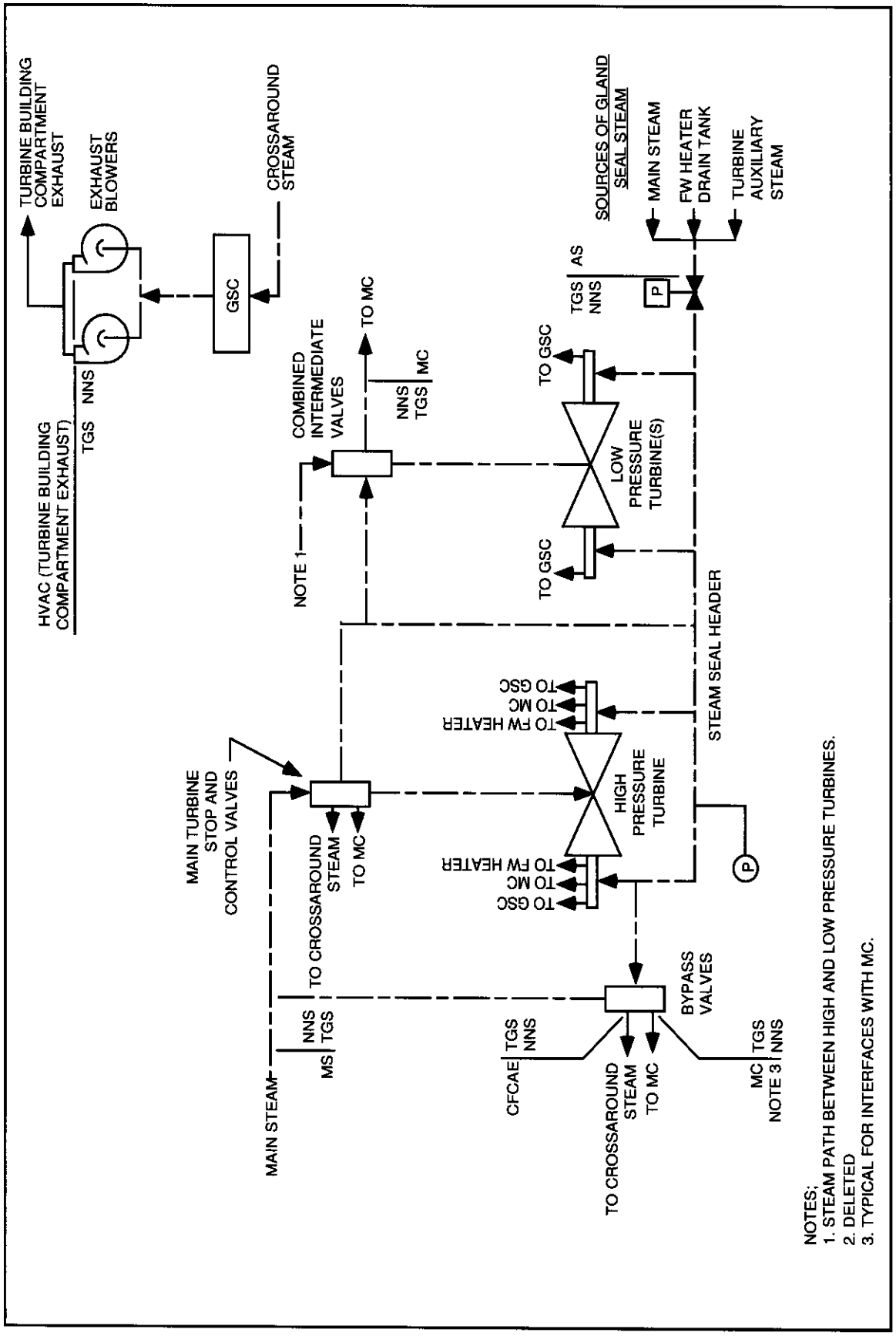

Figure 2.10.9 Turbine Gland Seal System

Activity ID	Activity Description	Orig Dur	Early Start	Early Finish	NRC
T2553PL240	INTERFACE PIPE TO GSS MODULE 2055-W5-50	17	27JUL00	18AUG00	
T2573TX000	PIPING INTEGRITY CHECK EL 135'-3" A 7	10	17NOV00	04DEC00	
T2493W4910	SET GLAND STM COND OUTLET PIPE MODULE 2049-W4-91	4	04DEC00	07DEC00	
T2473TX000	PIPING INTEGRITY CHECK EL 117'-6" A 7	10	12DEC00	26DEC00	
T2493ME001	SET GLAND STEAM CONDENSER GSS-ME-01 EL 117'	3	18DEC00	20DEC00	
T2493W4900	SET CPS PIPE MODULE 2049-W4-90	4	21DEC00	27DEC00	
T2463TX000	PIPING INTEGRITY CHECK EL 117'-6" A 6	10	23APR01	04MAY01	
T2553TX000	PIPING INTEGRITY CHECK EL 135'-3" A 5	10	09MAY01	22MAY01	
L1IT210091	ITAAC 2.10.9.1 - TGS Functional Arrang TGS1	0		22MAY01	I
L1IS210091	Submit ITAAC 2.10.9.1 - TGS Functional Arra TGS1	5	23MAY01	30MAY01	I
L1IV210091	NRC Verify ITAAC 2.10.9.1 - TGS Functional TGS1	20	31MAY01	27JUN01	I
L1IP210091	Publish FRN ITAAC 2.10.9.1 - TGS1	5	28JUN01	05JUL01	I
L1000GW175	ISSUE FEDERAL REGISTER NOTICE FOR FUEL LOAD	5	01AUG02	07AUG02	R

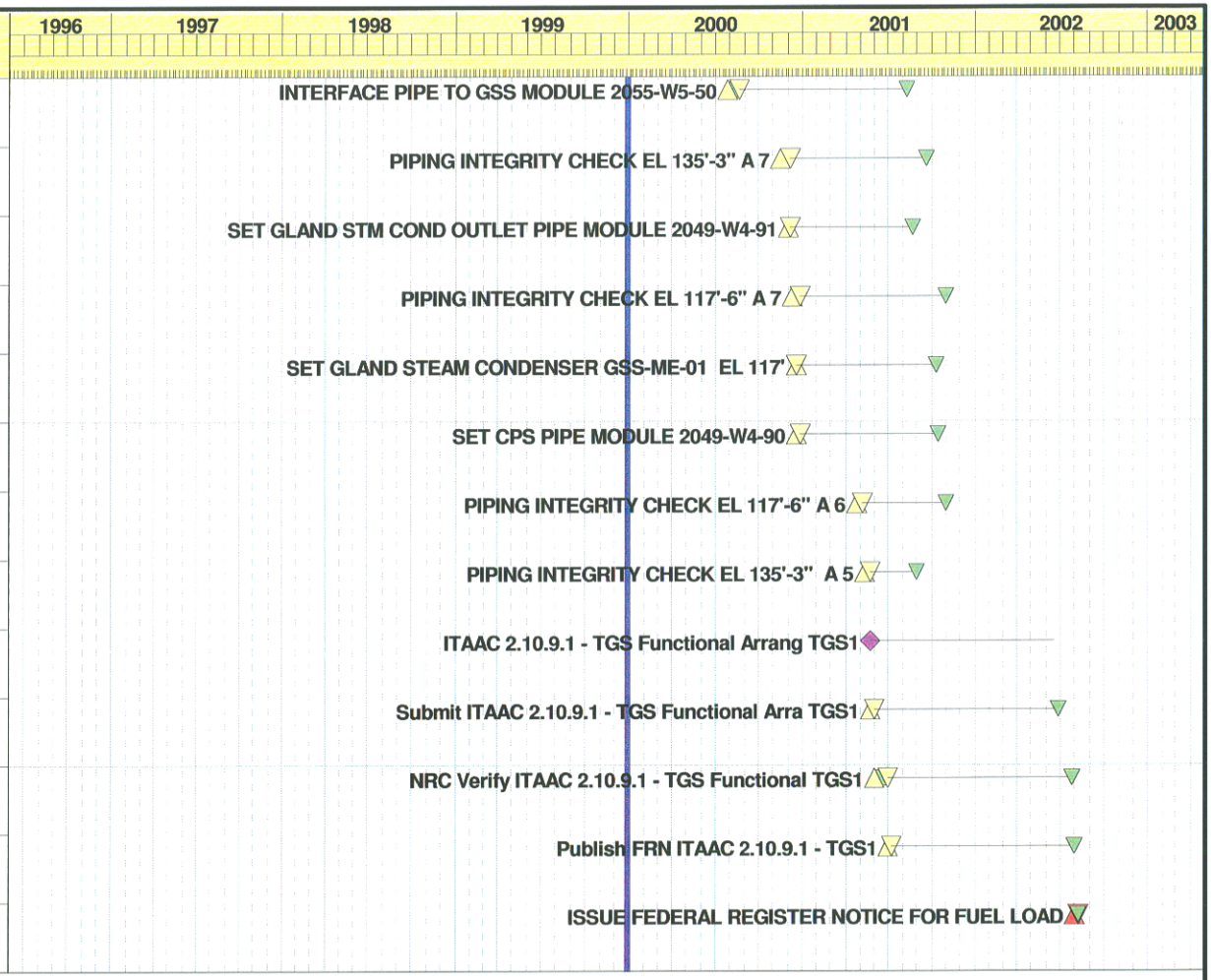

Start Date	01JAN93
Finish Date	16APR03
Data Date	01JAN00
Run Date	30MAR04 09:56

© Primavera Systems, Inc.

Early Bar
Float Bar
Progress Bar
Critical Activity

CIMS

CIPIMS/ITAAC DEMONSTRATION SCHEDULE

COL AFTER PLANT ORDER
BUT BEFORE FIRST NI REBAR

TGS1 PREDECESSORS

ACTIVITY ID	ORIG DUR	REM DUR	CAL	%		ACTIVITY DESCRIPTION	EARLY START	EARLY FINISH	LATE START	LATE FINISH	TOTAL FLOAT
L1IT210091	0	0	1	0		ITAAC 2.10.9.1 - TGS Functional Arrang TGS1		22MAY01		18JUN02	272
					CODE	AA= = =G=GL= =IT= = = = = = = = = = = = = = =I					
..T2463TX000	10	10	1	0	PR	PIPING INTEGRITY CHECK EL 117'-6" A 6	23APR01	4MAY01	17OCT01	30OCT01	124
..T2473TX000	10	10	1	0	PR	PIPING INTEGRITY CHECK EL 117'-6" A 7	12DEC00	26DEC00	17OCT01	30OCT01	216
..T2493ME001	3	3	1	0	PR	SET GLAND STEAM CONDENSER GSS-ME-01 EL 117'	18DEC00	20DEC00	8OCT01	10OCT01	205
..T2493W4900	4	4	1	0	PR	SET CPS PIPE MODULE 2049-W4-90	21DEC00	27DEC00	11OCT01	16OCT01	205
..T2493W4910	4	4	1	0	PR	SET GLAND STM COND OUTLET PIPE MODULE 2049-W4-91	4DEC00	7DEC00	15AUG01	20AUG01	178
..T2553PL240	17	17	1	0	PR	INTERFACE PIPE TO GSS MODULE 2055-W5-50	27JUL00	18AUG00	16JUL01	7AUG01	245
..T2553TX000*	10	10	1	0	PR	PIPING INTEGRITY CHECK EL 135'-3" A 5	9MAY01	22MAY01	15AUG01	28AUG01	68
..T2573TX000	10	10	1	0	PR	PIPING INTEGRITY CHECK EL 135'-3" A 7	17NOV00	4DEC00	5SEP01	18SEP01	201
..L1000GW175	5	5	1	0	SU	ISSUE FEDERAL REGISTER NOTICE FOR FUEL LOAD	1AUG02	7AUG02	1AUG02	7AUG02	0
..L1IS210091*	5	5	1	0	SU	Submit ITAAC 2.10.9.1 - TGS Functional Arra TGS1	23MAY01	30MAY01	19JUN02	25JUN02	272

STR2 in Report Form

ITAAC

Data Report with:

- Activity information and data
- Predecessors and Successors

Table 3.3-6
Inspections, Tests, Analyses, and Acceptance Criteria

Design Commitment	Inspections, Tests, Analyses	Acceptance Criteria
1. The physical arrangement of the nuclear island structures and the annex building is as described in the Design Description of this Section 3.3 and Figures 3.3-1 through 3.3-14. The physical arrangement of the radwaste building, the turbine building, and the diesel generator building is as described in the Design Description of this Section 3.3.	An inspection of the nuclear island structures, the annex building, the radwaste building, the turbine building, and the diesel generator building will be performed.	The as-built nuclear island structures, the annex building, the radwaste building, the turbine building, and the diesel generator building conform with the physical arrangement as described in the Design Description of this Section 3.3 and Figures 3.3-1 through 3.3-14.
2.a) The nuclear island structures, including the critical sections listed in Table 3.3-7, are seismic Category I and are designed and constructed to withstand design basis loads as specified in the Design Description, without loss of structural integrity and the safety-related functions.	i) An inspection of the nuclear island structures will be performed. Deviations from the design due to as-built conditions will be analyzed for the design basis loads. ii) An inspection of the as-built concrete thickness will be performed.	i) A report exists which reconciles deviations during construction and concludes that the as-built nuclear island structures, including the critical sections, conform to the approved design and will withstand the design basis loads specified in the Design Description without loss of structural integrity or the safety-related functions. ii) A report exists that concludes that the as-built concrete thicknesses conform with the building sections defined on Table 3.3-1.
2.b) Site grade level is located relative to floor elevation 100'-0" per Table 3.3-5.	Inspection of the as-built site grade will be conducted.	Site grade is consistent with design plant grade within the dimension defined on Table 3.3-5.
2.c) The containment and its penetrations are designed and constructed to ASME Code Section III, Class MC.[1]	See Tier 1 Material, Subsection 2.2.1, Containment System.	See Tier 1 Material, Subsection 2.2.1, Containment System.

1. Containment isolation devices are addressed in subsection 2.2.1, Containment System.

Table 3.3-7 Nuclear Island Critical Structural Sections
Containment Internal Structures
South west wall of the refueling cavity
South wall of the west steam generator cavity
North east wall of the in-containment refueling water storage tank
In-containment refueling water storage tank steel wall
Column supporting the operating floor
Auxiliary and Shield Building
South wall of auxiliary building (column line 1), elevation 66'-6" to elevation 180'-0"
Interior wall of auxiliary building (column line 7.3), elevation 66'-6" to elevation 160'-6"
West wall of main control room in auxiliary building (column line L), elevation 117'-6" to elevation 153'-0"
North wall of MSIV east compartment (column line 11 between lines P and Q), elevation 117'-6" to elevation 153'-0"
Shield building cylinder, elevation 160'-6" to elevation 200'-0"
Roof slab at elevation 180'-0" adjacent to shield building cylinder
Floor slab on metal decking at elevation 135'-3"
2'-0" slab in auxiliary building (tagging room ceiling) at elevation 135'-3"
Finned floor in the main control room at elevation 135'-3"
Shield building roof, exterior wall of the PCS water storage tank
Shield building roof, tension ring and columns between air inlets, elevation 265'-0" to elevation 275'-10"
Divider wall between the spent fuel pool and the fuel transfer canal
Nuclear Island Basemat Below Auxiliary Building
Bay between reference column lines 9.1 and 11, and K and L
Bay between reference column lines 1 and 2 and K-2 and N

Table 3.3-1
Definition of Wall Thicknesses for Nuclear Island Buildings and Annex Building[1]

Wall or Section Description	Column Lines	Floor Elevation or Elevation Range	Concrete Thickness[2][3]	Applicable Radiation Shielding Wall (Yes/No)
Containment Building Internal Structure				
Shield Wall between Reactor Vessel Cavity and RCDT Room	E-W wall parallel with column line 7	From 71'-6" to 83'-0"	3'-0"	Yes
West Reactor Vessel Cavity Wall	N-S wall parallel with column line N	From 83'-0" to 98'-0"	7'-6"	Yes
North Reactor Vessel Cavity Wall	E-W wall parallel with column line 7	From 83'-0" to 98'-0"	9'-0"	Yes
East Reactor Vessel Cavity Wall	N-S wall parallel with column line N	From 83'-0" to 98'-0"	7'-6"	Yes
West Refueling Cavity Wall	N-S wall parallel with column line N	From 98'-0" to 135'-3"	4'-0"	Yes
North Refueling Cavity Wall	E-W wall parallel with column line 7	From 98'-0" to 135'-3"	4'-0"	Yes
East Refueling Cavity Wall	N-S wall parallel with column line N	From 98'-0" to 135'-3"	4'-0"	Yes
South Refueling Cavity Wall	E-W wall parallel with column line 7	From 98'-0" to 135'-3"	4'-0"	Yes
South wall of west steam generator compartment	Not Applicable	From 103'-0" to 135'-3"	2'-6"	No
West wall of west steam generator compartment	Not Applicable	From 103'-0" to 135'-3"	2'-6"	No
North wall of west steam generator compartment/south wall of pressurizer compartment	Not Applicable	From 103'-0" to 135'-3" and 158'-0"	2'-6"	Yes
West wall of pressurizer compartment	Not Applicable	From 107'-2" to 169'-0"	2'-6"	Yes
North wall of pressurizer compartment	Not Applicable	From 107'-2" to 169'-0"	2'-6"	Yes
East wall of pressurizer compartment	Not Applicable	From 118'-6" to 169'-0"	2'-6"	Yes
North-east wall of in-containment refueling water storage tank	Parallel to column line N	From 103'-0" to 135'-3"	2'-6"	No
West wall of in-containment refueling water storage tank	Not applicable	From 103'-0" to 135'-3"	5/8" steel plate with stiffeners	No
South wall of east steam generator compartment	Not Applicable	From 87'-6" to 135'-3"	2'-6"	Yes

1. The column lines and floor elevations are identified and included on Figures 3.3-1 through 3.3-13.
2. These wall thicknesses have a construction tolerance of ± 1 inch, except for exterior walls below grade where the tolerance is +12 inches, - 1 inch.
3. For walls that are part of structural modules, the concrete thickness also includes the steel face plates.

Table 3.3-1 (cont.)
Definition of Wall Thicknesses for Nuclear Island Buildings and Annex Building[1]

Wall or Section Description	Column Lines	Floor Elevation or Elevation Range	Concrete Thickness[2][3]	Applicable Radiation Shielding Wall (Yes/No)
East wall of east steam generator compartment	Not Applicable	From 94'-0" to 135'-3"	2'-6"	Yes
North wall of east steam generator compartment	Not Applicable	From 87'-6" to 135'-3"	2'-6"	Yes
Shield Building				
Shield Building Cylinder	Not Applicable	From 100'-0" to 265'-0"	3'-0"	Yes
Columns between air inlets	Not Applicable	From 265'-0" to 271'-6"	3'-0"	Yes
Tension Ring	Not Applicable	From 271'-6" to 275'-10"	3'-0"	Yes
Conical Roof	Not Applicable	From 275'-10" to 289'-0"	1'-6" cast-in-place concrete over 6" pre-cast concrete ribbed conical sections	Yes
PCS Tank External Cylindrical Wall	Not Applicable	From 298'-9" to 333'-9"	2'-0"	Yes
PCS Tank Internal Cylindrical Wall	Not Applicable	From 314'-4" to 334'-0"	1'-6"	Yes
PCS Tank Roof	Not Applicable	334'-0"	1'-3"	No
Auxiliary Building Walls/Floors				
Column Line 1 wall	From I to N	From 66'-6" to 100'-0"	3'-0"	No
Column Line 1 wall	From I to N	From 100'-0" to 180'-0"	2'-3"	Yes
Column Line 2 wall	From I to K-2	From 66'-6" to 135'-3"	2'-6"	Yes
Column Line 2 wall	From K-2 to L-2	From 66'-6" to 135'-3"	5'-0"	Yes
Column Line 2 wall	From L-2 to N	From 98'-0" to 135'-3"	2'-6"	Yes
Column Line 2 wall	From I to J-1	From 135'-3" to 153'-0"	2'-0"	Yes
Column Line 3 wall	From J-1 to J-2	From 66'-6" to 82'-6"	2'-6"	Yes
Column Line 3 wall	From J-1 to J-2	From 100'-0" to 135'-3"	2'-6"	Yes

Table 3.3-1 (cont.)
Definition of Wall Thicknesses for Nuclear Island Buildings and Annex Building[1]

Wall or Section Description	Column Lines	Floor Elevation or Elevation Range	Concrete Thickness[2][3]	Applicable Radiation Shielding Wall (Yes/No)
Column Line 3 wall	From J-2 to K-2	From 66'-6" to 135'-3"	2'-6"	Yes
Column Line 3 wall	From K-2 to L-2	From 66'-6" to 94'-3"	2'-6"	Yes
Column Line 4 wall	From I to J-1	From 66'-6" to 153'-0"	2'-6"	Yes
Column Line 4 wall	From J-1 to J-2	From 66'-6" to 92'-6"	2'-6"	Yes
Column Line 4 wall	From J-1 to J-2	From 100'-0" to 135'-3"	2'-6"	Yes
Column Line 4 wall	From J-2 to K-2	From 66'-6" to 135'-3"	2'-6"	Yes
Column Line 4 wall	From I to intersection with shield building wall	From 135'-3" to 180'-0"	2'-0"	Yes
Column Line 5 wall	From I to J-1	From 66'-6" to 160'-6"	2'-0"	Yes
Column Line 7.1 wall	From I to J-1	From 66'-6" to 82'-6"	2'-0"	Yes
Column Line 7.2 wall	From I to J-1	From 66'-6" to 100'-0"	2'-0"	Yes
Column Line 7.3 wall	From I to K	From 66'-6" to 100'-0"	3'-0"	Yes
Column Line 7.3 wall	From I to K	From 100'-0" to 160'-6"	2'-0"	No
Column Line 11 wall	From I to Q	From 66'-6" to 100'-0"	3'-0"	No
Column Line 11 wall	From I to Q	From 100'-0" to 117'-6"	2'-0"	Yes
Column Line 11 wall	From I to L	From 117'-6" to 153'-0"	2'-0"	Yes
Column Line 11 wall	From L to M	From 117'-6" to 135'-3"	4'-0"	Yes
Column Line 11 wall	From M to P	From 117'-6" to 135'-3"	2'-0"	Yes
Column Line 11 wall	From P to Q	From 117'-6" to 135'-3"	4'-0"	Yes
Column Line 11 wall	From L to Q	From 135'-3" to 153'-0"	2'-0"	Yes
Column Line I wall	From 1 to 11	From 66'-6" to 100'-0"	3'-0"	No
Column Line I wall	From 1 to 4	From 100'-0" to 180'-0"	2'-0"	Yes
Column Line I wall	From 4 to 7.3	From 100'-0" to 160'-6"	2'-0"	No

Table 3.3-1 (cont.)
Definition of Wall Thicknesses for Nuclear Island Buildings and Annex Building[1]

Wall or Section Description	Column Lines	Floor Elevation or Elevation Range	Concrete Thickness[2][3]	Applicable Radiation Shielding Wall (Yes/No)
Column Line I wall	From 7.3 to 11	From 100'-0" to 153'-0"	2'-0"	No
Column Line J-1 wall	From 1 to 2	From 82'-6" to 100'-0"	2'-0"	Yes
Column Line J-1 wall	From 2 to 4	From 66'-6" to 135'-3"	2'-6"	Yes
Column Line J-1 wall	From 2 to 4	From 135'-3" to 153'-0"	2'-0"	Yes
Column Line J-1 wall	From 4 to 5	From 66'-6" to 107'-2"	2'-0"	Yes
Column Line J-2 wall	From 2 to 4	From 66'-6" to 135'-3"	2'-6"	Yes
Column Line J-2 wall	From 4 to intersection with shield building wall	From 82'-6" to 107'-2"	2'-0"	Yes
Column Line K-2 wall	From 2 to 4	From 66'-6" to 135'-3"	4'-9"	Yes
Column Line L-2 wall	From 2 to 4	From 66'-6" to 135'-3"	4'-0"	Yes
Column Line N wall	From 1 to 2	From 66'-6" to 119'-9"	3'-0"	No
Column Line N wall	From 1 to 2	From 119'-9" to 135'-3"	3'-0"	Yes
Column Line N wall	From 2 to 4	From 66'-6" to 98'-0"	3'-0"	No
Column Line N wall	From 2 to 4	From 98'-0" to 135'-3"	5'-6"	Yes
Column Line N wall	From 1 to 4	From 135'-3" to 180'-0"	2'-0"	Yes
Column Line J wall	From 7.3 to 11	From 66'-6" to 117'-6"	2'-0"	No
Column Line K wall	From 7.3 to 11	From 60'-6" to 135'-3"	2'-0"	Yes
Column Line L wall	From shield building wall to 11	From 60'-6" to 153'-0"	2'-0"	Yes
Column Line M wall	From shield building wall to 11	From 66'-6" to 153'-0"	2'-0"	Yes
Column Line P wall	From shield building wall to 11	From 66'-6" to 153'-0"	2'-0"	Yes
Column Line Q wall	From shield building wall to 11	From 66'-6" to 100'-0"	3'-0"	No
Column Line Q wall	From shield building wall to 11	From 100'-0" to 153'-0"	2'-0"	Yes
Labyrinth Wall between Col. Line 3 and 4 and J-1 to J-2	Not Applicable	From 82'-6" to 100'-0"	2'-0"	Yes
N-S Shield Wall (low wall)	Between K-2 and L-2 extending from column line 1 north	From 100'-0" to 107'-2"	2'-6"	Yes
N-S Shield Wall	Between K-2 and L-2 extending from column line 1 north	From 100'-0" to 125'-0"	2'-3"	Yes

Table 3.3-1 (cont.)
Definition of Wall Thicknesses for Nuclear Island Buildings and Annex Building[1]

Wall or Section Description	Column Lines	Floor Elevation or Elevation Range	Concrete Thickness[2][3]	Applicable Radiation Shielding Wall (Yes/No)
E-W Shield Wall	Between 1 and 2 extending from column line N east	From 100'-0" to 125'-0"	2'-9"	Yes
Column Line 9.2 wall	From I to J and K to L	From 117'-6" to 135'-3"	2'-0"	Yes
Labyrinth Wall between Column Line 7.3 and 9.2 and J to K	Corner wall	From 117'-6" to 135'-3"	2'-0"	Yes
Auxiliary Area Basemat	From 1-11 and I-Q, excluding shield building	From 60'-6" to 66'-6"	6'-0"	No
Nuclear Island Basemat	Below shield building	From 60'-6" to containment vessel or 82'-6"	6'-0" to 22'-0" (varies)	No
Floor	From 1 to 2 and I to N	82'-6"	2'-0"	Yes
Floor	From 2 to 5 and J-1 to J-2	82'-6"	0'-9"	Yes
Pipe Chase Floor	From 2 to 5 and J-1 to J-2	92'-6"	2'-0"	Yes
Floor	From 2 to 3 and J-2 to K-2	90'-3"	3'-0"	Yes
Floor	From 3 to 4 and J-2 to K-2	92'-6"	2'-0"	Yes
Floor	From 4 to 7.3 and I to J-1	82'-6"	2'-0"	Yes
Floor	From 1 to 2 and I to N	100'-0"	3'-0"	Yes
Floor	From 2 to 4 and K-2 to L-2	92'-8"	3'-2"	Yes
Floor	From I to J-2 and 4 to intersecting vertical wall before column line 5	107'-2"	2'-0"	Yes
Floor	From I to shield building wall and from intersecting vertical wall before column line 5 to column line 5	107'-2"	0'-9"	Yes
Floor	From 5 to 7.3 and I to shield building wall	100'-0"	2'-0"	Yes
Floor	From K to L and shield building wall to column line 10	100'-0"	0'-9"	Yes
Floor	From 1 to 1.6 and L-2 to N	125'-0"	3'-0"	Yes
Floor	From 1.6 to 2 and L-2 to N	117'-6"	2'-0"	Yes
Main Control Room Floor	From 9.2 to 11 and I to L	117'-6"	2'-0"	Yes

Table 3.3-1 (cont.)
Definition of Wall Thicknesses for Nuclear Island Buildings and Annex Building[1]

Wall or Section Description	Column Lines	Floor Elevation or Elevation Range	Concrete Thickness[2][3]	Applicable Radiation Shielding Wall (Yes/No)
Floor	Bounded by shield bldg, 7.3, J, 9.2 and L	117'-6"	2'-0"	Yes
Floor	From 9.2 to 11 and L to Q	117'-6"	2'-0"	Yes
Floor	From 3 to 4 and J-2 to K-2	117'-6"	2'-0"	Yes
Floor	From 2 to 4 and I to J-1	153'-0"	1'-3"	Yes
Floor	From 1 to 4 and I to N	180'-0"	1'-3"	Yes
Floor	From 4 to short of column line 5 and from I to intersection with shield building wall	135'-5"	0'-9"	Yes
Floor	From short of column line 5 to column line 5 and from I to intersection with shield building wall	133'-0"	0'-9"	Yes
Floor	From 5 to 7.3 and from I to intersection with shield building wall	135'-3"	0'-9"	Yes
Annex Building				
Column line 2 wall	From E to H	From 107'-2" to 135'-3"	19 3/4"	Yes
Column line 4 wall	From E to H	From 107'-2" to 162'-6" & 166'-0"	2'-0"	Yes
N-S Shield Wall between E and F	From 2 to 4	From 107'-2" to 135'-3"	1'-0"	Yes
Column line 4.1 wall	From E to H	From 107'-2" to 135'-3"	2'-0"	Yes
E-W Labyrinth Wall between column line 7.1 and 7.8 and G to H	Not Applicable	From 100'-0" to 112'-0"	2'-0"	
N-S Labyrinth Wall between column line 7.8 and 9 and G to H	Not Applicable	From 100'-0" to 112'-0"	2'-0"	
E-W Labyrinth Wall between column line 7.1 and 7.8 and G to H	Not Applicable	From 100'-0" to 112'-0"	2'-0"	Yes
N-S Labyrinth Wall between column line 7.8 and 9 and G to H	Not Applicable	From 100'-0" to 112'-0"	2'-0"	Yes
N-S Shield Wall on Column line. F	From 4.1 North	From 100'-0" to 117'-6"	1'-0"	Yes
Column Line 9 wall	From E to connecting wall between G and H	From 107'-2" to 117'-6"	2'-0"	Yes

Table 3.3-1 (cont.)
Definition of Wall Thicknesses for Nuclear Island Buildings and Annex Building[1]

Wall or Section Description	Column Lines	Floor Elevation or Elevation Range	Concrete Thickness[2][3]	Applicable Radiation Shielding Wall (Yes/No)
Column Line E wall	From 9 to 13	From 100'-0" to 135'-3"	2'-0"	Yes
Column Line 13 wall	From E to I.1	From 100'-0" to 135'-3"	2'-0"	Yes
Column Line I.1 wall	From 11.09 to 13	From 100'-0" to 135'-3"	2'-0"	Yes
Corridor Wall between G and H	From 9 to 13	From 100'-0" to 135'-3"	1'-6"	Yes
Column Line 9 wall	From I to H	From 117'-6" to 158'-0"	2'-0"	Yes
Floor	2 to 4 from shield wall between E and F to column line H	135'-3"	0'-6"	Yes
Floor	From 4 to 4.1 and E to H	135'-3"	1'-0"	Yes
Floor	From 9 to 13 and E to I.1	117'-6"	0'-6"	Yes
Floor	From 9 to 13 and E to I.1	135'-3"	0'-8"	Yes
Containment Filtration Rm A (North Wall)	Between column line E to H	From 135'-3" to 158'-0"	1'-0"	Yes
Containment Filtration Rm A (East wall)	Between column line E to F	From 135'-3" to 158'-0"	1'-0"	Yes
Containment Filtration Rm A (West wall)	Between column line G to H	From 135'-3" to 158'-0"	1'-0"	Yes
Containment Filtration Rm A (Floor)	Between column line E to H	135'-3"	1'-0"	Yes
Containment Filtration Rm B (Floor)	Between column line E to H	146'-3"	0'-6"	Yes
Containment Filtration Rm B (West wall)	Between column line G to H	From 146'-3" to 158'-0"	1'-0"	Yes
North wall (Room 50351)	N/A	100'-0" to top of wall	1'-4"	Yes
East Wall (Room 50351)	DR from 2R past 3R	100'-0" to top of wall	1'-4"	Yes
West wall (Room 50351)	DR from 2R past 3R	100'-0" to top of wall	1'-4"	Yes
East wall (Room 50352)	FR from 1R to 2R	100'-0" to top of wall	2'-0"	Yes
South wall (Room 50352)	1R from FR to DR	100'-0" to top of wall	2'-0"	Yes
West Wall (Room 50352)	DR from 1R to 2R	100'-0" to top of wall	2'-0"	Yes

ACTIVITY ID	ORIG DUR	REM DUR	CAL	%	CODE	ACTIVITY DESCRIPTION	EARLY START	EARLY FINISH	LATE START	LATE FINISH	TOTAL FLOAT
L1IT30302A	0	0	1	0		ITAAC 3.3.2.a) - NI Structures Deviations STR2		15MAR02		18JUN02	66
					CODE	AA= = =G=GL= =IT= = = = = = = = = = = =I					
..C1103CC002	2	2	1	0	PR	PLACE CONCRETE TO EL 80'-6"	22FEB00	23FEB00	22FEB00	23FEB00	0
..C1103CC003	2	2	1	0	PR	PLACE CONCRETE TO EL 71'-6" & SUMP CURBS	7FEB00	8FEB00	7FEB00	8FEB00	0
..C1103CC004	3	3	1	0	PR	PLACE PRECAST FLOOR @ 83' OVER RCDT	24AUG00	28AUG00	18MAR02	20MAR02	395
..C1103CC050	1	1	1	0	PR	PLACE CONCRETE IN CA-05	20MAR00	20MAR00	6OCT00	6OCT00	141
..C1103CR010	3	3	1	0	PR	INSTALL REBAR FOR SG FLOORS @ 83'	24FEB00	28FEB00	12APR00	14APR00	34
..C1103CR020	2	2	1	0	PR	INSTALL VERTICAL REBAR AROUND BASE OF CA01	7MAR00	8MAR00	16MAY00	17MAY00	50
..C1103CR030	2	2	1	0	PR	INSTALL REBAR FOR CVS WALLS TO EL 107'	28FEB00	6MAR00	12MAY00	15MAY00	50
..C1203CC001	2	2	1	0	PR	PLACE CONCRETE TO EL 96' 0" CONTNMNT NORTHEAST	27MAR00	28MAR00	6JUN00	7JUN00	50
..C1203CC002	1	1	1	0	PR	PLC CONC TO 98'0" PRMRY SHLD (BLK-OUT RV SUPTS)	17APR00	17APR00	25JAN01	25JAN01	196
..C1203CC007	2	2	1	0	PR	MASS CONCRETE EL 107'2" W/CURBS 108'-2" NRTHEAST	10AUG00	11AUG00	9OCT00	10OCT00	41
..C1203CC011	2	2	1	0	PR	PLACE CONCRETE TO TOP IN CA01 EAST S/G BAY WALLS	17AUG00	18AUG00	29JAN01	30JAN01	112
..C1203CC017	1	1	1	0	PR	MASS CONCRETE EL 107'2" W/CURBS 108'-2" STHEAST	4AUG00	4AUG00	10OCT00	10OCT00	46
..C1203CC021	2	2	1	0	PR	PLACE CONCRETE TO EL 96' 0" CONTNMNT SOUTHEAST	24MAR00	27MAR00	6JUN00	7JUN00	51
..C1203CC031	2	2	1	0	PR	PLACE CONCRETE TO TOP IN CA01 REFUELNG CNL WALLS	14FEB01	15FEB01	14FEB01	15FEB01	0
..C1203CC041	2	2	1	0	PR	PLACE CONCRETE TO TOP IN CA01 WEST S/G BAY WALLS	16FEB01	19FEB01	16FEB01	19FEB01	0
..C1203CC087	2	2	1	0	PR	PLACE CONCRETE TO EL 87' 6"	16MAR00	17MAR00	25MAY00	29MAY00	50
..C1203CC101	10	10	1	0	PR	CONCRETE FILL CA01&CA02 MODULES TO EL 135'/158'	31JAN01	13FEB01	31JAN01	13FEB01	0
..C1203CC103	3	3	1	0	PR	PLACE CONCRETE TO EL 102'6"/108'2" CNTNMNT WEST	2JUN00	6JUN00	1AUG00	3AUG00	41
..C1203CC105	1	1	1	0	PR	PLACE CONCRETE TO EL 105'2" EAST CNTNMT, NORTH	8MAY00	8MAY00	10JUL00	10JUL00	43
..C1203CC107	2	2	1	0	PR	PLACE CONC. TO 95'10" (IRWST) & 97'7" (RFL FLR)	23MAR00	24MAR00	6JUN00	7JUN00	52
..C1203CC113	1	1	1	0	PR	PLACE CONCRETE IRWST FLOOR 102'6" TO 103'0"	21JUN00	21JUN00	14SEP00	14SEP00	59
..C1203CC115	1	1	1	0	PR	PLACE CONCRETE TO EL 105'2", EAST CNTNMT, SOUTH	21APR00	21APR00	10JUL00	10JUL00	54
..C1203CC117	1	1	1	0	PR	PLACE CONCRETE REFUELING FLOOR TO 98'1"	27MAR00	27MAR00	18JUN01	18JUN01	312
..C1203CC125	1	1	1	0	PR	PLACE CONCRETE PRESSURZR CMPRTMENT 107'2"	2JUN00	2JUN00	12SEP00	12SEP00	70
..C1203CC127	1	1	1	0	PR	PLACE CONCRETE REFUEL GATE WALL TO 107'2"	27MAR00	27MAR00	18JUN01	18JUN01	312
..C1203CC137	1	1	1	0	PR	PLACE CONCRETE CVS PIPE TUNNEL TO 98'6"	8MAY00	8MAY00	3AUG00	3AUG00	61
..C1203CR001	5	5	1	0	PR	INSTALL REBAR-PXS FLOORS @ 96' & WALLS TO 107'	9MAR00	15MAR00	18MAY00	24MAY00	50
..C1203CR002	5	5	1	0	PR	INSTALL REBAR-RNS FLOORS @ 94' & WALLS TO 107'	9MAR00	15MAR00	18MAY00	24MAY00	50
..C1203CR004	5	5	1	0	PR	FIELD INSTLL - FLOOR REBAR FOR 98' (RFLNG CANAL)	23NOV99	1DEC99	10FEB00	16FEB00	53
..C1203CR007	10	10	1	0	PR	INSTALL REBAR FOR IRWST FLOOR @ 102'	18MAY00	1JUN00	18JUL00	31JUL00	41
..C1203CR013	2	2	1	0	PR	INSTALL REBAR FOR PIPE TUNNEL @ 98'	29MAR00	30MAR00	19JUN00	20JUN00	57
..C1203CR014	5	5	1	0	PR	INSTALL REBAR & STL FOR CURBS CMT108'2" NRTHEAST	26JUL00	1AUG00	22SEP00	28SEP00	41
..C1203CR020	5	5	1	0	PR	INSTALL REBAR-PXS FLOORS @ 87'6" & WALLS TO 107'	9MAR00	15MAR00	18MAY00	24MAY00	50
..C1203CR024	5	5	1	0	PR	INSTALL REBAR & STL FOR CURBS CMT108'2" STHEAST	20JUL00	26JUL00	25SEP00	29SEP00	46
..C1203CR025	4	4	1	0	PR	INSTALL REBAR FOR FLOOR @ 107' NORTHEAST	20JUL00	25JUL00	18SEP00	21SEP00	41
..C1203CR035	4	4	1	0	PR	INSTALL REBAR FOR FLOOR @ 107' SOUTHEAST	14JUL00	19JUL00	19SEP00	22SEP00	46
..C1203CR102	8	8	1	0	PR	INSTALL REBAR-ADJACENT TO CV TO 107', EAST SIDE	11APR00	20APR00	8JUN00	19JUN00	41
..C1203CR112	8	8	1	0	PR	INSTALL REBAR-ADJACENT TO CV TO 107', WEST SIDE	11APR00	20APR00	8JUN00	19JUN00	41
..C1303CC001	1	1	1	0	PR	PLACE CONCRETE TO EL 118' ADJACENT TO PRSSRZR	8MAY00	8MAY00	30JAN01	30JAN01	184
..C1303CC009	7	7	1	0	PR	COMPLETE MODULE SLABS AT EL 107' (OVER CVS AREA)	6NOV00	14NOV00	6NOV00	14NOV00	0
..C1403CC001	1	1	1	0	PR	PLACE CONCRETE SLAB AT EL 135'3"	16FEB01	16FEB01	27FEB01	27FEB01	7
..C1503CC011	10	10	1	0	PR	FORM/PLACE - IHP CONCRETE STAND EL. 135' TO 147'	5APR01	18APR01	27JUL01	9AUG01	79
..C2113CC001	1	1	1	0	PR	W-PLACE CONCRETE CL Q 8-9.5 66'-84' A 1	19JAN00	19JAN00	8FEB00	8FEB00	14
..C2113CC002	1	1	1	0	PR	CNCRT CLQ 9+-11, CL11 L-Q, & CL L-P EL 66'-84'	31JAN00	31JAN00	11FEB00	11FEB00	9
..C2113CC010	1	1	1	0	PR	CNCRT CLI 9+-11, CL11 I-L, & J & K 66-84	14JAN00	14JAN00	24JAN00	24JAN00	6
..C2113CC011	1	1	1	0	PR	CONCRETE CL 9.5 FROM K TO P EL 66' - 84' A 1&2	16FEB00	16FEB00	16MAR00	16MAR00	21
..C2113CC021	1	1	1	0	PR	CONCRETE BEAMS 9.1-9.5 FOR CL L, M & P TO 82'6"	13MAR00	13MAR00	10JUL00	10JUL00	83
..C2113CC100	2	2	1	0	PR	PLACE CONCRETE FLOOR SLABS 82'-6" A 1	13MAR00	14MAR00	15JUN00	16JUN00	67
..C2113CR001	6	6	1	0	PR	REBAR MODULE INTERIOR WALL CL J-P 66'-100' A 1&2	24NOV99	3DEC99	22DEC99	30DEC99	18
..C2113CR011	2	2	1	0	PR	MAKE UP REBAR TO CRADLE CL L, M, & P @ 82'-6"	14JAN00	17JAN00	4FEB00	7FEB00	15
..C2113CR100	12	12	1	0	PR	REBAR & EMBEDS FLOOR SLABS EL 82'-6" A 1	24FEB00	10MAR00	2MAY00	17MAY00	48
..C2123CC001	1	1	1	0	PR	CONCRETE CL J & K 7.2-9.1 EL 66' - 84' A 1&2	24JAN00	24JAN00	3MAR00	16MAR00	29
..C2123CC011	1	1	1	0	PR	CONCRETE CL 9.5 FROM I TO K EL 66' - 84' A 1&2	1FEB00	1FEB00	13MAR00	13MAR00	29
..C2123CC021	1	1	1	0	PR	CONCRETE BEAMS 9.1 - 9.5 FOR CL J & K TO 81'-6"	17MAR00	17MAR00	19MAY00	19MAY00	45
..C2123CC100	2	2	1	0	PR	PLACE CONCRETE FLOOR SLABS 82'-6" A 2	17MAR00	20MAR00	18MAY00	19MAY00	44
..C2123CR011	2	2	1	0	PR	MAKE UP REBAR TO CRADLE CL 7.3 & K @ 82'-6"	14JAN00	17JAN00	24JAN00	25JAN00	6
..C2123CR100	12	12	1	0	PR	REBAR & EMBEDS FLOOR SLABS EL 82'-6" A 2	1MAR00	16MAR00	2MAY00	17MAY00	44
..C2133CC001	1	1	1	0	PR	CONCRETE CL I 4-7.2 & WLS4&5 EL 66' TO 84' A 3&4	13JAN00	13JAN00	21JAN00	21JAN00	6
..C2133CC002	1	1	1	0	PR	W-PLACE CONCRETE CL7.3 EL 66'-84' A 3	24JAN00	24JAN00	1FEB00	1FEB00	6
..C2133CC004	1	1	1	0	PR	PLACE CONCRETE FOR RM 12258 FLOOR @ 74'6"	5APR00	5APR00	2JUN00	2JUN00	41
..C2133CC012	1	1	1	0	PR	PLACE CONCRETE CL I, 7.1 & 7.2 EL 66'6"-84' A3	24JAN00	24JAN00	3MAR00	3MAR00	29
..C2133CC100	2	2	1	0	PR	PLACE CONCRETE FLOORS EL 82'-6" A 3&4	4MAY00	5MAY00	4MAY00	5MAY00	0
..C2133CR004	1	1	1	0	PR	REBAR FOR RM 12258 FLOOR @ 74' 6"	4APR00	4APR00	1JUN00	1JUN00	41
..C2133CR100	6	6	1	0	PR	INSTALL & CONNECT REBAR FOR FLOOR EL 82'6" A 3&4	26APR00	3MAY00	26APR00	3MAY00	0

ACTIVITY ID	ORIG DUR	REM DUR	CAL	%		ACTIVITY DESCRIPTION	EARLY START	EARLY FINISH	LATE START	LATE FINISH	TOTAL FLOAT
..C2143CC001	1	1	1	0	PR	CONCRETE WALLS J1, J2 & 4 BEAM EL 66'-84' A 4	3MAR00	3MAR00	3MAR00	3MAR00	0
..C2143CR001	4	4	1	0	PR	REBAR CL J1,J2 & 4 BEAM TO SHIELD WALL & CA20 A4	1FEB00	4FEB00	21FEB00	24FEB00	14
..C2153CC001	1	1	1	0	PR	W-PLACE CONCRETE CL I 1-4 EL 66'-84' A 5	17JAN00	17JAN00	1FEB00	1FEB00	11
..C2153CC002	1	1	1	0	PR	W-PLACE CNCRT CL 1 I-N,WL BTW J2&K2 66'-84' A5&6	12JAN00	12JAN00	20JAN00	20JAN00	6
..C2153CC012	1	1	1	0	PR	PLACE CONCRETE WALL 2 66' 6" - 82' 6 " A 5	10FEB00	10FEB00	16MAR00	16MAR00	25
..C2153CC050	1	1	1	0	PR	CONCRETE FILL CA20 CL 2 & J1 EL 66'-135' A 5&6	25FEB00	25FEB00	8MAR00	8MAR00	8
..C2153CC051	1	1	1	0	PR	CONCRTE FILL CA20 CL J2,3&4toK2 EL 66'-135' A5&6	1MAR00	1MAR00	13MAR00	13MAR00	8
..C2153CC052	1	1	1	0	PR	CONCRETE FILL CA20 CL K2,L2,BALof3&4 EL 66'-135'	6MAR00	6MAR00	16MAR00	16MAR00	8
..C2153CC100	1	1	1	0	PR	PLACE CONCRETE 82'-6" SLAB CL 2-4 & I-J1 A 5	17MAR00	17MAR00	13APR00	13APR00	19
..C2153CC101	1	1	1	0	PR	PLACE CONCRETE FLOOR CL 1-2 EL 82'-6" A 5&6	24FEB00	24FEB00	26APR00	26APR00	44
..C2153CR012	2	2	1	0	PR	CONNECT REBAR WALL 2 TO CA20 66'6" - 100'	1FEB00	2FEB00	7MAR00	8MAR00	25
..C2153CR100	3	3	1	0	PR	REBAR & EMBEDS FOR 82'-6" SLAB CL 2-4 & I-J1 A 5	14MAR00	16MAR00	10APR00	12APR00	19
..C2163CC002	1	1	1	0	PR	W-PLACE CONCR CL N WALL CL 2-4 EL 66'-89' A 6	20JAN00	20JAN00	28JAN00	28JAN00	6
..C2163CR002	2	2	1	0	PR	CONNECT REBAR CRADLE TO WALLS N, Q & 7.3 A 1,3&6	14JAN00	17JAN00	24JAN00	25JAN00	6
..C2173CC001	1	1	1	0	PR	PLACE CONCRETE UNDER CV EL 66'- 74'6" A 7&8	11FEB00	11FEB00	11FEB00	11FEB00	0
..C2173CC002	1	1	1	0	PR	PLACE CONCRETE UNDER CV 74'6" to 82'6" A 7&8	24FEB00	24FEB00	24FEB00	24FEB00	0
..C2173CC010	1	1	1	0	PR	PLACE PEDESTAL CONCRETE UNDER CV CENTER	11JAN00	11JAN00	11JAN00	11JAN00	0
..C2173CC900	2	2	1	0	PR	GROUT CV BOTTOM HEAD	9FEB00	10FEB00	9FEB00	10FEB00	0
..C2173CR002	5	5	1	0	PR	COMPLETE REBAR MAKEUP TO CV BOTTOM HEAD	31JAN00	4FEB00	17FEB00	23FEB00	13
..C2213CC001	1	1	1	0	PR	CONCRT CLQ 8-9.5 @ 84'-100'	27JAN00	27JAN00	17FEB00	17FEB00	15
..C2213CC002	1	1	1	0	PR	CNCRTCLQ 9+-11, CL11 L-Q, & CL L-P EL 84-100	9FEB00	9FEB00	22FEB00	22FEB00	9
..C2213CC100	2	2	1	0	PR	PLACE CONCRETE FLOOR SLABS EL 100' A 1&2	30MAY00	31MAY00	21AUG00	22AUG00	58
..C2213CR011	2	2	1	0	PR	MAKE UP REBAR TO CRADLE CL L, M, & P @ 100'	24JAN00	25JAN00	11FEB00	14FEB00	14
..C2213CR100	10	10	1	0	PR	REBAR & EMBEDS FLOOR SLABS EL 100' A 1&2	12MAY00	25MAY00	7AUG00	18AUG00	59
..C2223CC001	1	1	1	0	PR	CONCRETE CL I, J & K 7.3-9.5 EL 84'-100' A2	24MAR00	24MAR00	25MAY00	25MAY00	44
..C2223CC010	1	1	1	0	PR	CNCRT CLI 9+-11, CL11 I-L, & J & K 84-100	25JAN00	25JAN00	2FEB00	2FEB00	6
..C2223CR011	2	2	1	0	PR	MAKE UP REBAR TO CRADLE CL J @ 100'	24JAN00	25JAN00	21MAR00	22MAR00	41
..C2233CC001	1	1	1	0	PR	PLACE CONCRTE CL I & CL 4&5 EL 84' TO 100' A 3&4	26JAN00	26JAN00	3FEB00	3FEB00	6
..C2233CC002	1	1	1	0	PR	W-PLACE CONCRETE CL 7.3 EL 84'-100' A 3	1FEB00	1FEB00	29MAR00	29MAR00	41
..C2233CC004	1	1	1	0	PR	PLACE CONCRETE FOR RM 12259 FLOOR @ 92' 6"	11APR00	11APR00	8JUN00	8JUN00	41
..C2233CC012	1	1	1	0	PR	PLACE CNCRT CL I TO 7.3 & CL 7.2 EL 84'-100' A3	1FEB00	1FEB00	24MAR00	24MAR00	38
..C2233CC100	1	1	1	0	PR	PLACE CONCRETE SAG FOR FL CL 5-7.3 EL 100' A 3&4	30JUN00	30JUN00	30JUN00	30JUN00	0
..C2233CR004	1	1	1	0	PR	REBAR FOR ROOM 12259 FLOOR @ 92' 6"	10APR00	10APR00	7JUN00	7JUN00	41
..C2243CC001	1	1	1	0	PR	CONCRETE CL J1, J2 & 4 BEAM EL 84'-100' A 4	13MAR00	13MAR00	24MAR00	24MAR00	9
..C2253CC001	1	1	1	0	PR	PLACE CONCRETE CL 1 J1-N & N 1-2 84'-100' A5&6	21JAN00	21JAN00	31JAN00	31JAN00	6
..C2253CC004	1	1	1	0	PR	W-PLACE CONCRETE CL I 1-4 EL 84'-100' A 5	17FEB00	17FEB00	30MAR00	30MAR00	30
..C2253CC005	2	2	1	0	PR	W-PLACE DIVIDERS J1,J2.5,K2,&L2 EL 82'-98' A5&6	6MAR00	7MAR00	5MAY00	8MAY00	44
..C2253CC012	1	1	1	0	PR	PLACE CONCRETE WALL 2 82'6" - 100' A 5	18FEB00	18FEB00	8MAY00	8MAY00	56
..C2253CC013	2	2	1	0	PR	PLACE CNCRT 92'-6" FLOOR AND WALL 3.7 IN CA20 A5	9MAR00	10MAR00	6SEP00	7SEP00	126
..C2253CC100	1	1	1	0	PR	PLACE CONCRETE 100' SLAB CL 2-4 & I-J1 A 5	5APR00	5APR00	22SEP00	22SEP00	119
..C2253CC101	2	2	1	0	PR	PLACE CONCRETE SAG EL 100' A 5&6	21AUG00	22AUG00	23AUG00	24AUG00	2
..C2253CR100	6	6	1	0	PR	REBAR & EMBEDS FOR 100' SLAB CL 2-4 & I-J1 A 5	28MAR00	4APR00	14SEP00	21SEP00	119
..C2263CC002	1	1	1	0	PR	W-PLACE CONCR CL N WALL CL 2-4 EL 89'-98'1" A 6	3FEB00	3FEB00	8MAY00	8MAY00	67
..C2273CC001	1	1	1	0	PR	PLACE CONCRETE UNDER CV EL 82'6"- 92' A 7&8	7MAR00	7MAR00	17MAR00	17MAR00	8
..C2273CC002	1	1	1	0	PR	PLACE CONCRETE UNDER CV EL 92'-100' A 7&8	21MAR00	21MAR00	31MAR00	31MAR00	8
..C2313CC008	1	1	1	0	PR	W-PLACE P,M&L (11-7.3) EL 100' - 118' A 1	16MAY00	16MAY00	30JUN00	30JUN00	32
..C2313CC009	1	1	1	0	PR	W-PLACE Q (8-11) + 11 (Q-L) EL 100'-118' A 1	10MAY00	10MAY00	30JUN00	30JUN00	36
..C2313CC100	2	2	1	0	PR	PLACE CONCRETE FLOOR SLABS EL 117'-6" A 1&2	25OCT00	26OCT00	1DEC00	4DEC00	25
..C2323CC005	1	1	1	0	PR	W-PLACE CL I 7.3-10 EL 100'- 118' A 2	7APR00	7APR00	21JUN00	21JUN00	52
..C2323CC006	1	1	1	0	PR	W-PLACE 11 (L-I) + I (11-10) EL 100'-118' A 2	2MAY00	2MAY00	30JUN00	30JUN00	42
..C2323CC007	1	1	1	0	PR	W-PLACE K (11-7.3) + J (11-7.3) EL 100'-118' A 2	25APR00	25APR00	30JUN00	30JUN00	47
..C2333CC002	1	1	1	0	PR	W-PLACE CONCR CL J-2 EL 100'-118' A 3&4	21MAR00	21MAR00	7AUG00	7AUG00	97
..C2333CC003	1	1	1	0	PR	W-PLACE CL I 5-7.3 5&7.3 EL 100'-118' A 3	20JUL00	20JUL00	20JUL00	20JUL00	0
..C2333CC101	1	1	1	0	PR	PLACE CONCRETE FLOOR EL 117'-6" CL 4.3-7.3 A 3&4	24NOV00	24NOV00	9FEB01	9FEB01	51
..C2343CC003	1	1	1	0	PR	PLACE CONCRETE I 4-5, 4 EL 105'-118' A 4	13SEP00	13SEP00	2OCT00	2OCT00	13
..C2343CC011	1	1	1	0	PR	PLACE CL I 939'6-970 TO 105'10 & 970-985 TO 104	10FEB00	10FEB00	17JUL00	17JUL00	110
..C2343CC013	1	1	1	0	PR	W-PLACE CONCR FLOOR @ 105 FROM CL 4.6 - 5	3AUG00	3AUG00	3AUG00	3AUG00	0
..C2343CC023	1	1	1	0	PR	W-PLACE CONCR FLOOR @ 107'2" FROM CL 4-4.6	3AUG00	3AUG00	3AUG00	3AUG00	0
..C2343CC046	1	1	1	0	PR	PLACE CONCRETE CL 4.6 TO EL 116'-6" A 4	8AUG00	8AUG00	25AUG00	25AUG00	13
..C2343CC100	1	1	1	0	PR	PLACE CONCRETE FLOOR EL 107'-2" A 4	13NOV00	15NOV00	6DEC00	6DEC00	13
..C2343CR003	1	1	1	0	PR	COMPLETE REBAR CL I 4 - 5, EL 105'-135' A 4	30AUG00	30AUG00	19SEP00	19SEP00	13
..C2343CR013	1	1	1	0	PR	REBAR FLOOR FOR ROOM 12353	27JUL00	27JUL00	27JUL00	27JUL00	0
..C2343CR014	1	1	1	0	PR	REBAR DOWEL RODS FOR CL 4.6 TO EL 112'0"	28JUL00	28JUL00	28JUL00	28JUL00	0
..C2343CR023	1	1	1	0	PR	REBAR FLOOR FOR ROOM 12351	1AUG00	1AUG00	1AUG00	1AUG00	0
..C2343CR046	1	1	1	0	PR	REBAR CL 4.6 TO EL 117'-6" A 4	4AUG00	4AUG00	23AUG00	23AUG00	13
..C2353CC001	1	1	1	0	PR	W-PLACE CL N 1-2 & 1 N-J1 EL 100'-118' A 5&6	8MAR00	8MAR00	13JUL00	13JUL00	89
..C2353CC004	1	1	1	0	PR	PLACE CL I 1-939'6, 1 I-J.1 & 4 EL100'-118' A 5	2MAR00	2MAR00	5JUL00	5JUL00	87
..C2353CC100	2	2	1	0	PR	PLACE CONCRETE FLOOR EL 117'-6" A 5&6	26OCT00	27OCT00	24NOV00	29NOV00	21

ACTIVITY ID	ORIG DUR	REM DUR	CAL	%		ACTIVITY DESCRIPTION	EARLY START	EARLY FINISH	LATE START	LATE FINISH	TOTAL FLOAT
..C2363CC002	1	1	1	0	PR	W-PLACE CL N 2-4 EL 98'1"-118' A 6	25FEB00	25FEB00	28JUL00	28JUL00	108
..C2363CC005	1	1	1	0	PR	W-PLACE WALLS CL K2-N & 1-2 EL 100'-118' A 6	31AUG00	31AUG00	19JUN01	19JUN01	202
..C2373CC001	1	1	1	0	PR	W-PLACE SHIELD CL 5-Q EL 100' - 118' A 7&8	3MAY00	3MAY00	12JUL00	12JUL00	48
..C2373CC002	1	1	1	0	PR	W-PLACE SHIELD CL 5-N EL 100' - 118' A 7&8	28APR00	28APR00	7JUL00	7JUL00	48
..C2373CC003	1	1	1	0	PR	W-PLACE SHIELD CL N-Q EL 100' - 118' A 7&8	25APR00	25APR00	3JUL00	3JUL00	48
..C2413CC001	2	2	1	0	PR	PLACE CONCRETE FLOOR SLABS EL 135'-3" A 1&2	10JAN01	11JAN01	19FEB01	20FEB01	28
..C2413CC008	1	1	1	0	PR	W-PLACE P,M&L (11-7.3) EL 118'-133'-3" A 1	19MAY00	19MAY00	11AUG00	11AUG00	58
..C2413CC009	1	1	1	0	PR	W-PLACE Q (8-11) + 11 (Q-L) EL 118' -133' A 1	5JUN00	5JUN00	11AUG00	11AUG00	48
..C2423CC005	1	1	1	0	PR	W-PLACE CL I 7.3-10 EL 118'- 133' A 2	1MAY00	1MAY00	2AUG00	2AUG00	65
..C2423CC006	1	1	1	0	PR	W-PLACE 11 (L-I) + I (11-10) 118'-133' A 2	29MAY00	29MAY00	11AUG00	11AUG00	53
..C2423CC007	1	1	1	0	PR	W-PLACE K 7.3-9.3 J 11-7.3 EL 118'- 133' A 2	8MAY00	8MAY00	11AUG00	11AUG00	67
..C2423CC017	1	1	1	0	PR	W-PLACE CONCR CL 8 J-K & 9.2 K-L EL117'-133' A 2	6NOV00	6NOV00	22JAN01	22JAN01	51
..C2423CR017	3	3	1	0	PR	W-REBAR CL 8 J-K & 9.2 K-L EL 117'-133' A 2	27OCT00	31OCT00	12JAN01	16JAN01	51
..C2433CC002	1	1	1	0	PR	W-PLACE CONCR CL J-2 EL 118'-133'A 3&4	27MAR00	27MAR00	11AUG00	11AUG00	97
..C2433CC003	1	1	1	0	PR	W-PLACE CONCR CL I 4-7.3 5&7.3 EL 118'-133'A 3&4	22SEP00	22SEP00	11OCT00	11OCT00	13
..C2433CC100	2	2	1	0	PR	PLACE CONCRETE FLOOR EL 135'3" A 3&4	22JAN01	23JAN01	8FEB01	9FEB01	13
..C2433CR100	6	6	1	0	PR	INSTALL & CONNECT REBAR MODS FOR FL EL 135' A3&4	12JAN01	19JAN01	31JAN01	7FEB01	13
..C2453CC001	1	1	1	0	PR	W-PLACE CL N 1-2 & 1 N-J.1 EL 118'-133' A 5&6	16MAR00	16MAR00	21JUL00	21JUL00	89
..C2453CC004	1	1	1	0	PR	W-PLACE CL I 1-4 & 1 I-J.1 EL 118'-133' A 5	10MAR00	10MAR00	13JUL00	13JUL00	87
..C2453CC009	1	1	1	0	PR	W-PLACE CL N 1-2 & 1 N-J.1 EL 133'-149' A 5&6	4APR00	4APR00	9AUG00	9AUG00	89
..C2453CC100	2	2	1	0	PR	PLACE CONCRETE FLOORS EL 135'3" A 5&6	29DEC00	2JAN01	30JAN01	31JAN01	21
..C2453CR100	6	6	1	0	PR	INSTALL & CONNECT REBAR MODS EL 135' A 5&6	20DEC00	28DEC00	22JAN01	29JAN01	21
..C2463CC002	1	1	1	0	PR	W-PLACE CL N 2-4 EL 118'-133' A 6	7AUG00	7AUG00	7AUG00	7AUG00	0
..C2463CC005	2	2	1	0	PR	W-PLACE WALLS CL K2-N & 1-2 EL 118'-133' A 6	7NOV00	8NOV00	28JUN01	29JUN01	162
..C2473CC001	1	1	1	0	PR	W-PLACE SHIELD CL 5-Q EL 118' - 133' A 7&8	4AUG00	4AUG00	4AUG00	4AUG00	0
..C2473CC002	1	1	1	0	PR	W-PLACE SHIELD CL 5-N EL 118' - 133' A 7&8	9MAY00	9MAY00	24JUL00	24JUL00	52
..C2473CC003	1	1	1	0	PR	W-PLACE SHIELD CL N-Q EL 118' - 133' A 7&8	4MAY00	4MAY00	23AUG00	23AUG00	77
..C2513CC001	2	2	1	0	PR	PLACE ROOF CONCRETE EL 153'0" A 1&2	3APR01	4APR01	3JUL01	5JUL01	64
..C2513CC008	1	1	1	0	PR	W-PLACE P,M&L (11-7.3) EL 133'-149' A 1	31AUG00	31AUG00	20SEP00	20SEP00	13
..C2513CC009	1	1	1	0	PR	W-PLACE Q (8-11) + 11 (Q-L) EL 133'- 149' A 1	18SEP00	18SEP00	23OCT00	23OCT00	25
..C2513CC018	1	1	1	0	PR	W-PLACE P,M&L (11-7.3) EL 149'-156' A 1	13SEP00	13SEP00	21JUN01	21JUN01	196
..C2513CC019	1	1	1	0	PR	W-PLACE Q (8-11) + 11 (Q-L) EL 149'- 156' A 1	28SEP00	28SEP00	2NOV00	2NOV00	25
..C2513CR001	7	7	1	0	PR	INSTALL ROOF REBAR & FORMS EL 153' A 1&2	23MAR01	2APR01	22JUN01	2JUL01	64
..C2523CC005	1	1	1	0	PR	W-PLACE CL I 7.3-10 EL 133'- 149' A 2	8AUG00	8AUG00	9NOV00	9NOV00	66
..C2523CC006	1	1	1	0	PR	W-PLACE 11 L-I + I 11-10 EL 133'-149' A 2	8SEP00	8SEP00	17APR01	17APR01	153
..C2523CC015	3	3	1	0	PR	W-PLACE CL I 7.3-10 EL 149'-156' A 2	18AUG00	22AUG00	26APR01	30APR01	174
..C2523CC016	1	1	1	0	PR	W-PLACE 11 L-I + I 11-10 EL 149'-156' A 2	21SEP00	21SEP00	30APR01	30APR01	153
..C2533CC003	1	1	1	0	PR	W-PLACE CL I 4-7.3 & 5 EL 133'-149' A 3&4	11OCT00	11OCT00	30OCT00	30OCT00	13
..C2533CC013	1	1	1	0	PR	W-PLACE CONCR CL I 4-7.3,5&7.3EL 149'-165' A 3&4	20OCT00	20OCT00	8NOV00	8NOV00	13
..C2533CC100	2	2	1	0	PR	PLACE ROOF CONCRETE EL 160'0" A 3&4	20APR01	23APR01	23JUL01	24JUL01	64
..C2533CR100	7	7	1	0	PR	INSTALL ROOF REBAR & FORMS EL 160' A 3&4	11APR01	19APR01	12JUL01	20JUL01	64
..C2553CC002	1	1	1	0	PR	W-PLACE CL N 2-4 EL 133'-149' A 6	18AUG00	18AUG00	18AUG00	18AUG00	0
..C2553CC004	1	1	1	0	PR	W-PLACE CL I 1-4 & 1 I-J.1 EL 133'-149' A 5	29MAR00	29MAR00	1AUG00	1AUG00	87
..C2553CC007	2	2	1	0	PR	W-PLACE WALLS CL I-J1 & 2-4 EL 135'-153' A 5	11JAN01	12JAN01	19JUN01	20JUN01	112
..C2553CC008	2	2	1	0	PR	W-PLACE WALLS CL 4 I-K2 EL 135'-149' A 5&6	23AUG00	24AUG00	25AUG00	28AUG00	2
..C2553CC011	1	1	1	0	PR	W-PLACE CL N 1-2 & 1 N-J1 EL 149'-165' A 5&6	14APR00	14APR00	21AUG00	21AUG00	89
..C2553CC012	1	1	1	0	PR	W-PLACE CL N 2-4 EL 149'-165' A 6	25AUG00	25AUG00	25AUG00	25AUG00	0
..C2553CC014	1	1	1	0	PR	W-PLACE CL I 1-4 & 1 I-J.1 EL 149'-165' A 5	11APR00	11APR00	14AUG00	14AUG00	87
..C2573CC001	1	1	1	0	PR	W-PLACE SHIELD CL 5-Q EL 133' - 149' A 7&8	22AUG00	22AUG00	24AUG00	24AUG00	2
..C2573CC002	1	1	1	0	PR	W-PLACE SHIELD CL 5-N EL 133' - 149' A 7&8	24MAY00	24MAY00	8AUG00	8AUG00	52
..C2573CC003	1	1	1	0	PR	W-PLACE SHIELD CL N-Q EL 133' - 149' A 7&8	5SEP00	5SEP00	13SEP00	13SEP00	6
..C2573CC004	1	1	1	0	PR	W-PLACE SHIELD CL 5-Q EL 149' - 165' A 7&8	6SEP00	6SEP00	14SEP00	14SEP00	6
..C2573CC005	1	1	1	0	PR	W-PLACE SHIELD CL 5-N EL 149' - 165' A 7&8	7JUN00	7JUN00	22AUG00	22AUG00	53
..C2573CC006	1	1	1	0	PR	W-PLACE SHIELD CL N-Q EL 149' - 165' A 7&8	15SEP00	15SEP00	12FEB01	12FEB01	102
..C2653CC002	1	1	1	0	PR	W-PLACE CL N 2-4 EL 165'-180'-9" A 6	18SEP00	18SEP00	21SEP00	21SEP00	3
..C2653CC004	1	1	1	0	PR	W-PLACE CL I 1-4 & 1 I-J.1 EL 165'-180'-9" A 5	9AUG00	9AUG00	10NOV00	10NOV00	66
..C2653CC008	2	2	1	0	PR	W-PLACE WALLS CL 4 I-K2 EL 149'-165' A 5&6	13SEP00	14SEP00	15SEP00	18SEP00	2
..C2653CC011	1	1	1	0	PR	W-PLACE CL N 1-2 & 1 N-J1 EL 165'-180'-9" A 5&6	5SEP00	5SEP00	21SEP00	21SEP00	12
..C2653CC018	2	2	1	0	PR	W-PLACE WALLS CL 4 I-K2 EL 165'-180' A 5&6	20SEP00	21SEP00	20SEP00	21SEP00	0
..C2653CC100	2	2	1	0	PR	PLACE ROOF CONCRETE EL 180'-9" A 5&6	14FEB01	15FEB01	24JUL01	25JUL01	112
..C2653CC101	2	2	1	0	PR	W-SLAB CL I-J1 & 2-4 EL 153' A 5	31JAN01	1FEB01	10JUL01	11JUL01	112
..C2653CR100	8	8	1	0	PR	CONNECT ROOF REBAR & FORM ROOF EL 180' A 5&6	2FEB01	13FEB01	12JUL01	23JUL01	112
..C2653CR101	6	6	1	0	PR	REBAR & EMBEDS SLAB CL I-J1 & 2-4 EL 153' A 5	23JAN01	30JAN01	29JUN01	9JUL01	112
..C2673CC001	1	1	1	0	PR	W-PLACE SHIELD CL 5-Q EL 165' - 181' A 7&8	11OCT00	11OCT00	5APR01	5APR01	122
..C2673CC002	1	1	1	0	PR	W-PLACE SHIELD CL 5-N EL 165' - 181' A 7&8	15SEP00	15SEP00	19SEP00	19SEP00	2
..C2673CC003	1	1	1	0	PR	W-PLACE SHIELD CL N-Q EL 165' - 181' A 7&8	4OCT00	4OCT00	10APR01	10APR01	130
..C2673CC004	1	1	1	0	PR	W-PLACE SHIELD CL 5-Q EL 181' - 197' A 7&8	20OCT00	20OCT00	16APR01	16APR01	122
..C2673CC005	1	1	1	0	PR	W-PLACE SHIELD CL 5-N EL 181' - 197' A 7&8	27SEP00	27SEP00	13APR01	13APR01	138

ACTIVITY ID	ORIG DUR	REM DUR	CAL	%		ACTIVITY DESCRIPTION	EARLY START	EARLY FINISH	LATE START	LATE FINISH	TOTAL FLOAT
..C2673CC006	1	1	1	0	PR	W-PLACE SHIELD CL N-Q EL 181' - 197' A 7&8	16OCT00	16OCT00	20APR01	20APR01	130
..C2673CC007	1	1	1	0	PR	W-PLACE SHIELD CL 5-Q EL 179' - 213' A 7&8	20DEC00	20DEC00	4MAY01	4MAY01	95
..C2673CC008	1	1	1	0	PR	W-PLACE SHIELD CL 5-N EL 197' - 213' A 7&8	16OCT00	16OCT00	2MAY01	2MAY01	138
..C2673CC009	1	1	1	0	PR	W-PLACE SHIELD CL N-Q EL 197' - 213' A 7&8	3NOV00	3NOV00	10MAY01	10MAY01	130
..C2773CC001	1	1	1	0	PR	W-PLACE SHIELD CL 5-Q EL 213' - 229' A 7&8	3JAN01	3JAN01	16MAY01	16MAY01	95
..C2773CC002	1	1	1	0	PR	W-PLACE SHIELD CL 5-N EL 213' - 229' A 7&8	26OCT00	26OCT00	14MAY01	14MAY01	138
..C2773CC003	1	1	1	0	PR	W-PLACE SHIELD CL N-Q EL 213' - 229' A 7&8	9JAN01	9JAN01	22MAY01	22MAY01	95
..C2773CC004	1	1	1	0	PR	W-PLACE SHIELD CL 5-Q EL 229' - 241' A 7&8	22JAN01	22JAN01	5JUN01	5JUN01	95
..C2773CC005	1	1	1	0	PR	W-PLACE SHIELD CL 5-N EL 229' - 241' A 7&8	20NOV00	20NOV00	5JUN01	5JUN01	136
..C2773CC006	1	1	1	0	PR	W-PLACE SHIELD CL N-Q EL 229' - 241' A 7&8	19JAN01	19JAN01	6JUN01	6JUN01	97
..C2773CC007	1	1	1	0	PR	W-PLACE SHIELD CLMNS CL 5-Q EL 241' - 246' A 7&8	9FEB01	9FEB01	25JUN01	25JUN01	95
..C2773CC008	1	1	1	0	PR	W-PLACE SHIELD CL 5-N EL 241' - 246' A 7&8	4DEC00	4DEC00	19JUN01	19JUN01	138
..C2773CC009	1	1	1	0	PR	W-PLACE SHIELD CL N-Q EL 241' - 246' A 7&8	7FEB01	7FEB01	25JUN01	25JUN01	97
..C2773CC010	1	1	1	0	PR	W-PLACE PCS MOD EXTERIOR WALL EL 276'-292' A 7&8	5FEB02	5FEB02	18JUN02	18JUN02	94
..C2773CC011	1	1	1	0	PR	W-PLACE PCS MOD EXTERIOR WALL EL 292'-307' A 7&8	4FEB02	4FEB02	4FEB02	4FEB02	0
..C2773CC020	1	1	1	0	PR	W-PLACE PCS MOD INTERIOR WALL EL 281'-292' A 7&8	15FEB02	15FEB02	20MAY02	20MAY02	66
..C2773CC021	1	1	1	0	PR	W-PLACE PCS MOD INTERIOR WALL EL 292'-307' A 7&8	28FEB02	28FEB02	3JUN02	3JUN02	66
..C2773CC030	1	1	1	0	PR	W-PLACE SHIELD PLATFORM SLAB EL 266' A 7&8	17JAN02	17JAN02	4FEB02	4FEB02	12
..C2773CC040	20	20	1	0	PR	REBAR, FORM & PLACE SHIELD ROOF EL 277 A 7&8	18DEC01	16JAN02	18DEC01	16JAN02	0
..C2773CC050	4	4	1	0	PR	W-PLACE SHIELD COMP RING EL 241'- 246' A 7&8	12DEC01	17DEC01	12DEC01	17DEC01	0
..C2773CC051	4	4	1	0	PR	W-PLACE SHIELD TENSION RING EL 241'- 246' A 7&8	17SEP01	20SEP01	10JAN02	15JAN02	79
..C2773CC100*	1	1	1	0	PR	W-PLACE PCS MOD ROOF EL 307' A 7&8	15MAR02	15MAR02	18JUN02	18JUN02	66
..C2773CR000	1	1	1	0	PR	INSTALL REINFORCING PCS TANK AREA 7&8	23JAN02	23JAN02	25APR02	25APR02	66
..C2773CR001	12	12	1	0	PR	INSTALL REINFORCING FOR ROOF SLAB AREA 7&8	27DEC01	14JAN02	18JAN02	4FEB02	15
..L1IT303111	0	0	1	0	PR	ITAAC 3.3.11.i - CONCRETE OVER SOFT SOIL @ 84		6MAR00		16MAR00	8
..L1IT303112	0	0	1	0	PR	ITAAC 3.3.11.ii - CNCRT OVR SOFT SOIL @ 117'-6"		24FEB00		7MAR00	8
..N0003CC000	2	2	1	0	PR	PLACE CONCRETE NUCLEAR ISLAND BASEMAT	3JAN00*	4JAN00	3JAN00*	4JAN00	0
..N0003CR500	12	12	1	0	PR	INSTALL - BASEMAT LOWER REBAR & EMBEDS	8NOV99	23NOV99	8NOV99	23NOV99	0
..N0003CR501	12	12	1	0	PR	INSTALL - BASEMAT UPPER REBAR, FORMWORK & EMBEDS	14DEC99	30DEC99	14DEC99	30DEC99	0
..N0003CR502	12	12	1	0	PR	INSTALL - UPPER REBAR CHAIRS	24NOV99	13DEC99	24NOV99	13DEC99	0
..N0003CR550	18	18	1	0	PR	INSTALL EXTERIOR WALL REINFORCING 66' TO 108'	1DEC99	27DEC99	6DEC99	30DEC99	3
..L1000GW175	5	5	1	0	SU	ISSUE FEDERAL REGISTER NOTICE FOR FUEL LOAD	1AUG02	7AUG02	1AUG02	7AUG02	0
..L1IS30302A*	5	5	1	0	SU	Submit ITAAC 3.3.2.a) - NI Structures Devia STR2	18MAR02	22MAR02	19JUN02	25JUN02	66