Entergy

Entergy Nuclear Northeast
Entergy Nuclear Operations, Inc.
Vermont Yankee
322 Governor Hunt Rd.
P.O. Box 157
Vernon, VT 05354
Tel 802-257-7711

January 31, 2004
BVY 04-009

U.S. Nuclear Regulatory Commission
ATTN: Document Control Desk
Washington, DC 20555

Subject: **Vermont Yankee Nuclear Power Station**
License No. DPR-28 (Docket No. 50-271)
Technical Specification Proposed Change No. 263 – Supplement No. 4
Extended Power Uprate – NRC Acceptance Review

By letter dated September 10, 2003[1], Vermont Yankee[2] (VY) proposed to amend Facility Operating License, DPR-28, for the Vermont Yankee Nuclear Power Station (VYNPS) to increase the maximum authorized power level from 1593 megawatts thermal (MWt) to 1912 MWt. The request for license amendment was prepared in accordance with the guidelines contained in the NRC-approved, licensing topical report NEDC-33004P-A[3] (referred to as the CLTR). Included with the license amendment request was NEDC-33090P[4] (referred to as the PUSAR), a summary of the results of the safety analyses and evaluations performed specifically for the VYNPS power uprate. Subsequent to the initial application, VY provided a supplement dated October 1, 2003 and two supplements dated October 28, 2003.

NRC's letter dated December 15, 2003[5], provided a status of the NRC staff's acceptance review of the extended power uprate (EPU) application for VYNPS and identified areas where additional details are needed. The attachments to this letter provide the additional information requested by the NRC to consider the application for extended power uprate acceptable.

Attachment 1 to this letter provides additional information describing how items stated in the VYNPS PUSAR were dispositioned based on the CLTR or will be dispositioned as part of the cycle-specific reload evaluation. In addition, information is provided as to the method used by VY to review and provide oversight of engineering products of GE Nuclear Energy (GENE). The information provided in Attachment 1 directly corresponds to those areas identified in paragraphs 1.a, 1.b, and 1.c of NRC's December 15, 2003 letter. The response to Item 1.a references a summary confirmation of PUSAR topics that is provided as Attachment 2 to this letter. Because the information provided in Attachment 2 is

[1] Vermont Yankee letter to U.S. Nuclear Regulatory Commission, "Extended Power Uprate," Proposed Change No. 263, BVY 03-80, September 10, 2003.
[2] Entergy Nuclear Vermont Yankee, LLC and Entergy Nuclear Operations, Inc. are the licensees of the Vermont Yankee Nuclear Power Station.
[3] GE Nuclear Energy, "Constant Pressure Power Uprate," Licensing Topical Report NEDC-33004P-A (Proprietary), July 2003, and NEDO-33004-A (Non-Proprietary), July 2003.
[4] GE Nuclear Energy, "Safety Analysis Report for Vermont Yankee Nuclear Power Station Constant Pressure Power Uprate," NEDC-33090P, September 2003.
[5] U.S. Nuclear Regulatory Commission letter to Entergy Nuclear Operations, Inc., "Vermont Yankee Nuclear Power Station – Extended Power Uprate Acceptance Review (TAC No. MC0761)," December 15, 2003.

AP01

deemed to contain proprietary information as defined by 10CFR2.790, that attachment has been designated in its entirety as proprietary information. The specific proprietary information is identified by double underline within double brackets. Attachment 3 to this letter is a non-proprietary version of Attachment 2 with the proprietary information removed.

Attachment 4 to this letter provides a revision to the template safety evaluation in NRC review standard RS-001[6] substituting the plant-specific design criteria and draft General Design Criteria of 10CFR50, Appendix A that constitute VYNPS' licensing basis. The revision will maintain consistency within VYNPS' licensing basis. Changes to the template are identified by change bars in the left-hand margins.

Attachment 5 to this letter is an update to the review matrix that cross-references the criteria of NRC review standard RS-001 for extended power uprates with the information in the VYNPS PUSAR and the NRC-approved CLTR for constant pressure power uprate. "VY Notes" have been added to the matrices to provide additional guidance to direct reviewers to the specific safety analyses and conclusions. Certain information in Matrix 8 is deemed to contain proprietary information as defined by 10CFR2.790. For that reason Attachment 5 has been designated in its entirety as proprietary information. The specific proprietary information is identified by double underline within double brackets. Attachment 6 to this letter is a non-proprietary version of Attachment 5 with the proprietary information removed.

Attachment 7 to this letter addresses steam dryer integrity issues. VY recognizes the importance of these issues and is planning to implement modifications to the dryer during the next refueling outage as described in the attachment. Based on discussions with NRC staff, VY understands that adequately addressing the scope of dryer issues and specific actions identified in GE SIL 644, Rev. 1 will provide sufficient information for the NRC staff to complete its acceptance review in this matter. VY will be responsive to additional information requests throughout the review process. Certain information in Attachment 7 is deemed to contain proprietary information as defined by 10CFR2.790. For that reason Attachment 7 has been designated in its entirety as proprietary information. The specific proprietary information is identified by double underline within double brackets. Attachment 8 to this letter is a non-proprietary version of Attachment 7 with the proprietary information removed.

General Electric Company, as the owner of the proprietary information in Attachments 2, 5, and 7 has executed three affidavits (provided as Attachment 9 to this letter). The enclosed proprietary information has been handled and classified as proprietary, is customarily held in confidence, and has been withheld from public disclosure. The proprietary information was provided to VY in GENE transmittals that are referenced in the affidavits. The proprietary information has been faithfully reproduced in attachments to this letter, such that the affidavits remain applicable. GENE requests that the enclosed proprietary information be withheld from public disclosure in accordance with the provisions of 10CFR2.790 and 9.17.

This supplement to the license amendment request does not change the scope or conclusions in the original application, nor does it change VY's determination of no significant hazards consideration.

If you have any questions, please contact Mr. James DeVincentis at (802) 258-4236.

---

[6] U.S. Nuclear Regulatory Commission, Office of Nuclear Reactor Regulation, "Review Standard for Extended Power Uprates," (RS-001) Revision 0, December 2003.

Sincerely,

Jay K. Thayer
Site Vice President

STATE OF VERMONT)
)ss
WINDHAM COUNTY)

Then personally appeared before me, Jay K. Thayer, who, being duly sworn, did state that he is Site Vice President of the Vermont Yankee Nuclear Power Station, that he is duly authorized to execute and file the foregoing document, and that the statements therein are true to the best of his knowledge and belief.

SALLY A. SANDSTRUM NOTARY WINDHAM COUNTY, VERMONT

Sally A. Sandstrum, Notary Public
My Commission Expires February 10, 2007

Attachments (9)

cc: USNRC Region 1 Administrator (w/o attachments)
USNRC Resident Inspector – VYNPS (w/o attachments)
USNRC Project Manager – VYNPS (two copies/with attachments)
Vermont Department of Public Service (with non-proprietary attachments)

Docket No. 50-271
BVY 04-009

Attachment 9

Vermont Yankee Nuclear Power Station

Proposed Technical Specification Change No. 263

Supplement No. 4

Extended Power Uprate – NRC Acceptance Review

General Electric Company Affidavits

General Electric Company

AFFIDAVIT

I, George B. Stramback, state as follows:

(1) I am Manager, Regulatory Services, General Electric Company ("GE") and have been delegated the function of reviewing the information described in paragraph (2) which is sought to be withheld, and have been authorized to apply for its withholding.

(2) The information sought to be withheld is contained in Attachment 2 to GE letter GE-VYNPS-AEP-307, Michael Dick (GE) to Craig Nichols (ENOI), *VYNPS Extended Power Uprate - Response to NRC Request for Additional Information, Proprietary and Non-Proprietary Versions,* dated January 29, 2004. The Attachment 2 proprietary information, *GE Responses to NRC RAIs,* is delineated by a double underline inside double square brackets. In each case, the superscript notation[3] refers to Paragraph (3) of this affidavit, which provides the basis for the proprietary determination.

(3) In making this application for withholding of proprietary information of which it is the owner, GE relies upon the exemption from disclosure set forth in the Freedom of Information Act ("FOIA"), 5 USC Sec. 552(b)(4), and the Trade Secrets Act, 18 USC Sec. 1905, and NRC regulations 10 CFR 9.17(a)(4), and 2.790(a)(4) for "trade secrets" (Exemption 4). The material for which exemption from disclosure is here sought also qualify under the narrower definition of "trade secret", within the meanings assigned to those terms for purposes of FOIA Exemption 4 in, respectively, Critical Mass Energy Project v. Nuclear Regulatory Commission, 975F2d871 (DC Cir. 1992), and Public Citizen Health Research Group v. FDA, 704F2d1280 (DC Cir. 1983).

(4) Some examples of categories of information which fit into the definition of proprietary information are:

a. Information that discloses a process, method, or apparatus, including supporting data and analyses, where prevention of its use by General Electric's competitors without license from General Electric constitutes a competitive economic advantage over other companies;

b. Information which, if used by a competitor, would reduce his expenditure of resources or improve his competitive position in the design, manufacture, shipment, installation, assurance of quality, or licensing of a similar product;

c. Information which reveals aspects of past, present, or future General Electric customer-funded development plans and programs, resulting in potential products to General Electric;

d. Information which discloses patentable subject matter for which it may be desirable to obtain patent protection.

The information sought to be withheld is considered to be proprietary for the reasons set forth in paragraphs (4)a., and (4)b, above.

(5) To address 10 CFR 2.790 (b) (4), the information sought to be withheld is being submitted to NRC in confidence. The information is of a sort customarily held in confidence by GE, and is in fact so held. The information sought to be withheld has, to the best of my knowledge and belief, consistently been held in confidence by GE, no public disclosure has been made, and it is not available in public sources. All disclosures to third parties including any required transmittals to NRC, have been made, or must be made, pursuant to regulatory provisions or proprietary agreements which provide for maintenance of the information in confidence. Its initial designation as proprietary information, and the subsequent steps taken to prevent its unauthorized disclosure, are as set forth in paragraphs (6) and (7) following.

(6) Initial approval of proprietary treatment of a document is made by the manager of the originating component, the person most likely to be acquainted with the value and sensitivity of the information in relation to industry knowledge. Access to such documents within GE is limited on a "need to know" basis.

(7) The procedure for approval of external release of such a document typically requires review by the staff manager, project manager, principal scientist or other equivalent authority, by the manager of the cognizant marketing function (or his delegate), and by the Legal Operation, for technical content, competitive effect, and determination of the accuracy of the proprietary designation. Disclosures outside GE are limited to regulatory bodies, customers, and potential customers, and their agents, suppliers, and licensees, and others with a legitimate need for the information, and then only in accordance with appropriate regulatory provisions or proprietary agreements.

(8) The information identified in paragraph (2), above, is classified as proprietary because it contains detailed information in support of NEDC-33090P, *Safety Analysis Report for Vermont Yankee Nuclear Power Station Constant Pressure Power Uprate,* Class III (GE Proprietary Information), Revision 0, dated September 2003, which was submitted to the NRC. This power uprate report contains detailed results and conclusions from evaluations of the safety-significant changes necessary to demonstrate the regulatory acceptability for the power uprate of a GE BWR, utilizing analytical models, methods and processes, including computer codes, which GE has developed, obtained NRC approval of and applied to perform evaluations of the transient and accident events in the GE Boiling Water Reactor ("BWR"). The development and approval of these system, component, and thermal hydraulic models and computer codes was achieved at a significant cost to GE, on the order of several million dollars.

The development of the evaluation process along with the interpretation and application of the analytical results is derived from the extensive experience database that constitutes a major GE asset.

(9) Public disclosure of the information sought to be withheld is likely to cause substantial harm to GE's competitive position and foreclose or reduce the availability of profit-making opportunities. The information is part of GE's comprehensive BWR safety and technology base, and its commercial value extends beyond the original development cost. The value of the technology base goes beyond the extensive physical database and analytical methodology and includes development of the expertise to determine and apply the appropriate evaluation process. In addition, the technology base includes the value derived from providing analyses done with NRC-approved methods.

The research, development, engineering, analytical and NRC review costs comprise a substantial investment of time and money by GE.

The precise value of the expertise to devise an evaluation process and apply the correct analytical methodology is difficult to quantify, but it clearly is substantial.

GE's competitive advantage will be lost if its competitors are able to use the results of the GE experience to normalize or verify their own process or if they are able to claim an equivalent understanding by demonstrating that they can arrive at the same or similar conclusions.

The value of this information to GE would be lost if the information were disclosed to the public. Making such information available to competitors without their having been required to undertake a similar expenditure of resources would unfairly provide competitors with a windfall, and deprive GE of the opportunity to exercise its competitive advantage to seek an adequate return on its large investment in developing these very valuable analytical tools.

I declare under penalty of perjury that the foregoing affidavit and the matters stated therein are true and correct to the best of my knowledge, information, and belief.

Executed on this 29th day of January 2004.

George B. Stramback
General Electric Company

General Electric Company

AFFIDAVIT

I, George B. Stramback, state as follows:

(1) I am Manager, Regulatory Services, General Electric Company ("GE") and have been delegated the function of reviewing the information described in paragraph (2) which is sought to be withheld, and have been authorized to apply for its withholding.

(2) The information sought to be withheld is contained in Attachment 2 to GE letter GE-VYNPS-AEP-308, Michael Dick (GE) to Craig Nichols (ENOI), *VYNPS Constant Pressure Power Uprate - Generic Disposition Matrix, Proprietary and Non-Proprietary Versions*, dated January 29, 2004. The Attachment 2, *GE Generic Disposition Matrix*, proprietary information is delineated by a double underline inside double square brackets. In each case, the superscript notation{3} refers to Paragraph (3) of this affidavit, which provides the basis for the proprietary determination.

(3) In making this application for withholding of proprietary information of which it is the owner, GE relies upon the exemption from disclosure set forth in the Freedom of Information Act ("FOIA"), 5 USC Sec. 552(b)(4), and the Trade Secrets Act, 18 USC Sec. 1905, and NRC regulations 10 CFR 9.17(a)(4), and 2.790(a)(4) for "trade secrets" (Exemption 4). The material for which exemption from disclosure is here sought also qualify under the narrower definition of "trade secret", within the meanings assigned to those terms for purposes of FOIA Exemption 4 in, respectively, Critical Mass Energy Project v. Nuclear Regulatory Commission, 975F2d871 (DC Cir. 1992), and Public Citizen Health Research Group v. FDA, 704F2d1280 (DC Cir. 1983).

(4) Some examples of categories of information which fit into the definition of proprietary information are:

a. Information that discloses a process, method, or apparatus, including supporting data and analyses, where prevention of its use by General Electric's competitors without license from General Electric constitutes a competitive economic advantage over other companies;

b. Information which, if used by a competitor, would reduce his expenditure of resources or improve his competitive position in the design, manufacture, shipment, installation, assurance of quality, or licensing of a similar product;

c. Information which reveals aspects of past, present, or future General Electric customer-funded development plans and programs, resulting in potential products to General Electric;

d. Information which discloses patentable subject matter for which it may be desirable to obtain patent protection.

The information sought to be withheld is considered to be proprietary for the reasons set forth in paragraphs (4)a., and (4)b, above.

(5) To address 10 CFR 2.790 (b) (4), the information sought to be withheld is being submitted to NRC in confidence. The information is of a sort customarily held in confidence by GE, and is in fact so held. The information sought to be withheld has, to the best of my knowledge and belief, consistently been held in confidence by GE, no public disclosure has been made, and it is not available in public sources. All disclosures to third parties including any required transmittals to NRC, have been made, or must be made, pursuant to regulatory provisions or proprietary agreements which provide for maintenance of the information in confidence. Its initial designation as proprietary information, and the subsequent steps taken to prevent its unauthorized disclosure, are as set forth in paragraphs (6) and (7) following.

(6) Initial approval of proprietary treatment of a document is made by the manager of the originating component, the person most likely to be acquainted with the value and sensitivity of the information in relation to industry knowledge. Access to such documents within GE is limited on a "need to know" basis.

(7) The procedure for approval of external release of such a document typically requires review by the staff manager, project manager, principal scientist or other equivalent authority, by the manager of the cognizant marketing function (or his delegate), and by the Legal Operation, for technical content, competitive effect, and determination of the accuracy of the proprietary designation. Disclosures outside GE are limited to regulatory bodies, customers, and potential customers, and their agents, suppliers, and licensees, and others with a legitimate need for the information, and then only in accordance with appropriate regulatory provisions or proprietary agreements.

(8) The information identified in paragraph (2), above, is classified as proprietary because it contains detailed information, including identification of the "generic" topics, the methodology and specific scope of parameters for each "generic" topic, and the specific parameter values which in turn would reveal the methodology, in support of NEDC-33090P, *Safety Analysis Report for Vermont Yankee Nuclear Power Station Constant Pressure Power Uprate,* Class III (GE Proprietary Information), Revision 0, dated September 2003, which was submitted to the NRC. This power uprate report contains detailed results and conclusions from evaluations of the safety-significant changes necessary to demonstrate the regulatory acceptability for the power uprate of a GE BWR, utilizing analytical models, methods and processes, including computer codes, which GE has developed, obtained NRC approval of and applied to perform evaluations of the transient and accident events in the GE Boiling Water Reactor ("BWR"). The development and approval of these system, component, and thermal hydraulic models and computer codes was achieved at a significant cost to GE, on the order of several million dollars.

The development of the evaluation process along with the interpretation and application of the analytical results is derived from the extensive experience database that constitutes a major GE asset.

(9) Public disclosure of the information sought to be withheld is likely to cause substantial harm to GE's competitive position and foreclose or reduce the availability of profit-making opportunities. The information is part of GE's comprehensive BWR safety and technology base, and its commercial value extends beyond the original development cost. The value of the technology base goes beyond the extensive physical database and analytical methodology and includes development of the expertise to determine and apply the appropriate evaluation process. In addition, the technology base includes the value derived from providing analyses done with NRC-approved methods.

The research, development, engineering, analytical and NRC review costs comprise a substantial investment of time and money by GE.

The precise value of the expertise to devise an evaluation process and apply the correct analytical methodology is difficult to quantify, but it clearly is substantial.

GE's competitive advantage will be lost if its competitors are able to use the results of the GE experience to normalize or verify their own process or if they are able to claim an equivalent understanding by demonstrating that they can arrive at the same or similar conclusions.

The value of this information to GE would be lost if the information were disclosed to the public. Making such information available to competitors without their having been required to undertake a similar expenditure of resources would unfairly provide competitors with a windfall, and deprive GE of the opportunity to exercise its competitive advantage to seek an adequate return on its large investment in developing these very valuable analytical tools.

I declare under penalty of perjury that the foregoing affidavit and the matters stated therein are true and correct to the best of my knowledge, information, and belief.

Executed on this 29th day of January 2004.

George B. Stramback
General Electric Company

General Electric Company

AFFIDAVIT

I, George B. Stramback, state as follows:

(1) I am Manager, Regulatory Services, General Electric Company ("GE") and have been delegated the function of reviewing the information described in paragraph (2) which is sought to be withheld, and have been authorized to apply for its withholding.

(2) The information sought to be withheld is contained in Attachment 2 to GE letter GE-VYNPS-AEP-309, Michael Dick (GE) to Craig Nichols (ENOI), *VYNPS Constant Pressure Power Uprate - NRC EPU Review Standard Matrix 8 Input, Proprietary and Non-Proprietary Versions*, dated January 29, 2004. The Attachment 2, *NRC EPU Review Standard VY Notes to Matrix 8 Containing GE Input*, proprietary information is delineated by a double underline inside double square brackets. In each case, the superscript notation[{3}] refers to Paragraph (3) of this affidavit, which provides the basis for the proprietary determination.

(3) In making this application for withholding of proprietary information of which it is the owner, GE relies upon the exemption from disclosure set forth in the Freedom of Information Act ("FOIA"), 5 USC Sec. 552(b)(4), and the Trade Secrets Act, 18 USC Sec. 1905, and NRC regulations 10 CFR 9.17(a)(4), and 2.790(a)(4) for "trade secrets" (Exemption 4). The material for which exemption from disclosure is here sought also qualify under the narrower definition of "trade secret", within the meanings assigned to those terms for purposes of FOIA Exemption 4 in, respectively, Critical Mass Energy Project v. Nuclear Regulatory Commission, 975F2d871 (DC Cir. 1992), and Public Citizen Health Research Group v. FDA, 704F2d1280 (DC Cir. 1983).

(4) Some examples of categories of information which fit into the definition of proprietary information are:

a. Information that discloses a process, method, or apparatus, including supporting data and analyses, where prevention of its use by General Electric's competitors without license from General Electric constitutes a competitive economic advantage over other companies;

b. Information which, if used by a competitor, would reduce his expenditure of resources or improve his competitive position in the design, manufacture, shipment, installation, assurance of quality, or licensing of a similar product;

c. Information which reveals aspects of past, present, or future General Electric customer-funded development plans and programs, resulting in potential products to General Electric;

d. Information which discloses patentable subject matter for which it may be desirable to obtain patent protection.

The information sought to be withheld is considered to be proprietary for the reasons set forth in paragraphs (4)a., and (4)b, above.

(5) To address 10 CFR 2.790 (b) (4), the information sought to be withheld is being submitted to NRC in confidence. The information is of a sort customarily held in confidence by GE, and is in fact so held. The information sought to be withheld has, to the best of my knowledge and belief, consistently been held in confidence by GE, no public disclosure has been made, and it is not available in public sources. All disclosures to third parties including any required transmittals to NRC, have been made, or must be made, pursuant to regulatory provisions or proprietary agreements which provide for maintenance of the information in confidence. Its initial designation as proprietary information, and the subsequent steps taken to prevent its unauthorized disclosure, are as set forth in paragraphs (6) and (7) following.

(6) Initial approval of proprietary treatment of a document is made by the manager of the originating component, the person most likely to be acquainted with the value and sensitivity of the information in relation to industry knowledge. Access to such documents within GE is limited on a "need to know" basis.

(7) The procedure for approval of external release of such a document typically requires review by the staff manager, project manager, principal scientist or other equivalent authority, by the manager of the cognizant marketing function (or his delegate), and by the Legal Operation, for technical content, competitive effect, and determination of the accuracy of the proprietary designation. Disclosures outside GE are limited to regulatory bodies, customers, and potential customers, and their agents, suppliers, and licensees, and others with a legitimate need for the information, and then only in accordance with appropriate regulatory provisions or proprietary agreements.

(8) The information identified in paragraph (2), above, is classified as proprietary because it contains detailed information identifying the methodology and specific transient and accident events and justifications, as contained in supporting proprietary reference documents and NEDC-33090P, *Safety Analysis Report for Vermont Yankee Nuclear Power Station Constant Pressure Power Uprate,* Class III (GE Proprietary Information), Revision 0, dated September 2003, which was submitted to the NRC. This power uprate report contains detailed results and conclusions from evaluations of the safety-significant changes necessary to demonstrate the regulatory acceptability for the power uprate of a GE BWR, utilizing analytical models, methods and processes, including computer codes, which GE has developed, obtained NRC approval of and applied to perform evaluations of the transient and accident events in the GE Boiling Water Reactor ("BWR"). The development and approval of these system, component, and thermal hydraulic models and computer codes was achieved at a significant cost to GE, on the order of several million dollars.

The development of the evaluation process along with the interpretation and application of the analytical results is derived from the extensive experience database that constitutes a major GE asset.

(9) Public disclosure of the information sought to be withheld is likely to cause substantial harm to GE's competitive position and foreclose or reduce the availability of profit-making opportunities. The information is part of GE's comprehensive BWR safety and technology

base, and its commercial value extends beyond the original development cost. The value of the technology base goes beyond the extensive physical database and analytical methodology and includes development of the expertise to determine and apply the appropriate evaluation process. In addition, the technology base includes the value derived from providing analyses done with NRC-approved methods.

The research, development, engineering, analytical and NRC review costs comprise a substantial investment of time and money by GE.

The precise value of the expertise to devise an evaluation process and apply the correct analytical methodology is difficult to quantify, but it clearly is substantial.

GE's competitive advantage will be lost if its competitors are able to use the results of the GE experience to normalize or verify their own process or if they are able to claim an equivalent understanding by demonstrating that they can arrive at the same or similar conclusions.

The value of this information to GE would be lost if the information were disclosed to the public. Making such information available to competitors without their having been required to undertake a similar expenditure of resources would unfairly provide competitors with a windfall, and deprive GE of the opportunity to exercise its competitive advantage to seek an adequate return on its large investment in developing these very valuable analytical tools.

I declare under penalty of perjury that the foregoing affidavit and the matters stated therein are true and correct to the best of my knowledge, information, and belief.

Executed on this 29th day of January 2004.

George B. Stramback
General Electric Company

Docket No. 50-271
BVY 04-009

Attachment 1

Vermont Yankee Nuclear Power Station

Proposed Technical Specification Change No. 263

Supplement No. 4

Extended Power Uprate – NRC Acceptance Review

Disposition of PUSAR Topics

ITEM 1 – APPLICABILITY OF CPPU ANALYSES TO VYNPS
(italicized text is from NRC letter of December 15, 2003)

1. *Several areas are identified as being bounded by analyses performed as part of the Constant Pressure Power Uprate (CPPU) Licensing Topical Report (CLTR) or by the previous EPU Licensing Topical Report (ELTR) 1 and ELTR 2 assessments. Your application does not provide sufficient information to allow the NRC staff to be able to determine the applicability of the CPPU analyses to VYNPS. Specifically, information relating proposed VYNPS operation to the assumptions, evaluations, reviews, and assessments used in the CPPU analyses were not provided. Examples of these include:*

ITEM 1.a – GENERIC LTR DISPOSITION

a. *In the EPU Safety Analysis Report (SAR) (Attachment 4 to the September 10, 2003 application), items are stated by General Electric Nuclear Energy (GENE) to be dispositioned based on confirmation of consistency between VYNPS and the generic description provided in the CLTR (or ELTR-1 and ELTR-2). However, no details are provided to allow NRC staff to understand how this VYNPS to CLTR confirmation was performed. Specifically, what criteria, key parameters, etc., were examined to confirm the consistency?*

VY RESPONSE

The VYNPS Power Uprate Submittal dated September 10, 2003 (BVY 03-80) contains 54 tables summarizing CPPU evaluation topic dispositions for each of the 54 topic categories. Dispositions are characterized as either "Generic" or "Plant Specific." For dispositions characterized as Generic, the text associated with the evaluation specifies that the Generic disposition provided in the CLTR was confirmed. A summary of this confirmation, identifying applicability to VYNPS, is provided as Attachment 2 to this letter (contains Proprietary Information). Attachment 3 to this letter is a non-proprietary version of Attachment 2.

ITEM 1.b – GENE OVERSIGHT

1.b It is not clear to the NRC staff if VYNPS performed any independent confirmation or oversight of the GENE dispositions or assessments in compliance with the NRC CLTR Safety Evaluation Report (SER), Section 1.5, licensee expectations or restrictions, and applicable Title 10 of the Code of Federal Regulations (10 CFR) Part 50, Appendix B requirements. For example, Entergy should have conducted reviews, audits or inspections, or examined key parameters, or performed independent calculations, to support the engineering judgments made by GENE.

VY RESPONSE

CLTR SE Section 1.5 specifies the following expectations:

> "Licensee will identify all codes and methodologies used to obtain safety limits and operating limits and explain how these limits were verified to be correct for the uprated core. Also identify and discuss any limitations imposed by the staff on the use of these methodologies. The NRC expects that a table be provided, indicating that all applicable codes were reviewed and approved by the NRC, with any exceptions being noted and individually justified. The licensee is expected to confirm having reviewed the results of GENE analyses to assure that the codes were used correctly by GENE for CPPU conditions and that the limitations and restrictions were followed appropriately by GENE."

PUSAR Section 1.2.2 describes applications of limitations and exceptions pertaining to codes used in VYNPS CPPU analyses. PUSAR Table 1-1 lists the codes used to perform power uprate safety analyses. Safety limit minimum critical power ratio (SLMCPR) is evaluated in the reload licensing analysis (RLA)[1]. VYNPS is not restricted in its application of these methodologies other than those presently identified.

Safety related portions of the GENE work were performed in accordance with GENE's Quality Assurance Program. GENE maintains and implements this program in accordance with 10CFR50 Appendix B and allows access to facilities and records associated with the VY contract for the purpose of QA audits/surveillances. The VYNPS Quality Assurance Program provides for the audit, inspection and/or surveillance of vendor activities to ensure the effectiveness of contractual interfaces and compliance with the applicable criteria of 10 CFR 50, Appendix B.

VY confirmed the results of GENE analyses through:

1. Rigorous, multidisciplinary technical review of GENE evaluation reports to ensure:
    a. Appropriate use of design inputs,
    b. Consistency with the CLTR, and
    c. Design basis and licensing basis requirements are addressed;
2. Feedback of technical review results, in the form of detailed comments, to GENE performers;

[1] Vermont Yankee letter to U.S. Nuclear Regulatory Commission, "Technical Specification Proposed Change No. 264, Safety Limit Minimum Critical Power Ratio (SLMCPR) Change," (BVY 03-114) December 5, 2003.

3. Discussions with GENE performers to address comments and resolve; and

4. Application of the VY control of off-site services process to GENE.

Technical Assessment of GENE's work associated with the Vermont Yankee Nuclear Power Station (VYNPS) Power Uprate Project was performed during two assessments conducted at GENE offices in San Jose, CA during May and October of 2003. The scope of these Assessments included work performed by GENE, Global Nuclear Fuels (GNF) and GE Energy Services (GEES) in support of the VYNPS ARTS/MELLLA, Constant Pressure Power Uprate (CPPU) and MELLLA+ projects. There was also a review of other historical project information, such as GE-14 New Fuel Introduction. Participating in those activities were representatives of VY engineering disciplines, including mechanical/structural, nuclear, reactor engineering, and project engineering. The VY team reviewed design inputs, analysis methodologies and results in the GENE Design Record Files. The reviews included interviews of GENE technical task performers in order to obtain a thorough understanding of analysis methods. VY has plans for a future assessment of the steam dryer analysis and physical modifications in conjunction with the NRC staff audit. An additional assessment of the completed design record files will be conducted by September 2004.

ITEM 1.c – DISPOSITIONS BASED ON EXPERIENCE

Items (e.g., in Section 2) of the EPU SAR are dispositioned based on experience and are stated to be confirmed because they will be evaluated for the uprated core prior to CPPU implementation. However, these evaluations will be performed by Global Nuclear Fuel close to the reload outage and will only be available in the Supplemental Reload Licensing Report and the Core Operating Limits Report. There is no discussion as to how these confirmations, prior to CPPU implementation, will be verified by Entergy (by reviews, audits, etc.) in accordance with the NRC CLTR SER, Section 1.5, licensee expectations or restrictions, and applicable 10 CFR 50, Appendix B requirements.

VY RESPONSE

Item 1.c notes that certain items in the EPU SAR are dispositioned based on experience and are stated to be confirmed because they will be evaluated for the uprated core prior to CPPU implementation. The section of the EPU SAR provided as an example is Section 2, which deals with Reactor Core and Fuel Performance.

A majority of the analyses performed to justify operation at EPU conditions are insensitive to the specific core design. However, some analyses, such as those justifying thermal operating limits, require analysis with the actual cycle specific core design. Section 1.1.1 of the CLTR states:

> *Some of the safety evaluations affected by CPPU are fuel operating cycle (reload) dependent. Reload dependent evaluations require that the reload fuel design, core loading pattern, and operational plan be established so that analyses can be performed to establish core operating limits. The reload analysis demonstrates that the core design for CPPU meets the applicable NRC evaluation criteria and limits documented in Reference 3...*
>
> *... Therefore, the reload fuel design and core loading pattern dependent plant evaluations for CPPU operation will be performed with the reload analysis as part of the standard reload licensing process. No plant can implement a power uprate unless the appropriate reload core analysis is performed and all criteria and limits documented in Reference 3 are satisfied. Otherwise, the plant would be in an unanalyzed condition. Based on current requirements, the reload analysis results are documented in the Supplemental Reload Licensing Report (SRLR), and the applicable core operating limits are documented in the plant specific Core Operating Limits Report (COLR).*

Section 1.1.1 of the EPU SAR states:

> *Generic assessments are those safety evaluations that can be dispositioned for a group or all BWR plants by:*
>
> - *A bounding analysis for the limiting conditions;*
> - *Demonstrating that there is a negligible effect due to CPPU; or*
> - *Demonstrating that the required plant cycle specific reload analyses are sufficient and appropriate for establishing the CPPU licensing basis.*

Additionally, Section 1.1.1 of the EPU SAR states:

> *For generic assessments that are fuel design dependent, the assessments are applicable to GE / Global Nuclear Fuel (GNF) fuel designs up through GE14, analyzed with GE methodology.*

For these items that take this approach, the generic CLTR disposition requires no analysis to be performed as part of the CPPU submittal, as the specific reload core design will be analyzed for the uprated cycle. The VY EPU SAR confirms this generic disposition from the CLTR because the reload core will be analyzed at the uprated power. This is stated in the EPU SAR for each item that takes this approach.

For example, consider the SLMCPR. Section 2.2.1 of the CLTR, which states:

> *2.2.1 Safety Limit MCPR*
>
> *CPPU Effect: The Safety Limit MCPR (SLMCPR) can be affected slightly by CPPU due to the flatter power distribution inherent in the increased power level.*
>
> *CPPU Basis: ... This effect is not changed by following the constant pressure approach for the uprate. The SLMCPR analysis reflects the actual plant core loading pattern and is performed for each plant reload core (see Reference 3). ...*

Section 2.2.1 of the EPU SAR states:

> *2.2.1 Safety Limit MCPR*
>
> *The Safety Limit MCPR (SLMCPR) can be affected slightly by CPPU due to the flatter power distribution inherent in the increased power level... This effect is not changed by the CPPU approach (Reference 1). The SLMCPR analysis reflects the actual plant core-loading pattern and is performed for each plant reload core (Reference 5)...*

Section 1.5 of the NRC CLTR SER correctly identifies that the reload analysis process is documented in GESTAR II and that it is expected from experience that there will not be significant differences in the pre- and post-uprate analyses results. The SER section goes on to state that based on these facts, further review of the reload analysis methods or results is not necessary for CPPU applications.

It should be noted, however, that VY plans to perform the reload licensing analysis process as a design change, as it has for the past five reloads. This process requires senior management review and approval for all key reload related decisions. Input to the analyses, as well as output from the vendor, is reviewed by all relevant disciplines, as part of the design change process. A number of reviewers of the reload design change have also been involved in the power uprate process, thereby promoting seamless transfer of knowledge between the two endeavors.

Reload vendor oversight includes evaluation of manufacturing (fuel assemblies and components) and technical (core design work and accident/transient analysis). Additionally, VY has reviewed audit/surveillance results by other utilities and industry groups. VY also participates in a number of

reload design meetings with GNF, which to date for the upcoming reload, have included the Critical Eigenvalue and Thermal Margin Review, the Licensing Kickoff Meeting, and the Reload Licensing Transient Review. Other reviews will be conducted following the completion of the reload licensing analysis. Finally, there is a weekly phone call between VY, GNF, and Entergy White Plains Office personnel to discuss issues related to the reload.

Docket No. 50-271
BVY 04-009

Attachment 2

Vermont Yankee Nuclear Power Station

Proposed Technical Specification Change No. 263

Supplement No. 4

Extended Power Uprate – NRC Acceptance Review

Summary Disposition of PUSAR Topics

PROPRIETARY INFORMATION

Docket No. 50-271
BVY 04-009

Attachment 3

Vermont Yankee Nuclear Power Station

Proposed Technical Specification Change No. 263

Supplement No. 4

Extended Power Uprate – NRC Acceptance Review

Summary Disposition of PUSAR Topics

NON-PROPRIETARY VERSION

Vermont Yankee Nuclear Power Station (VYNPS)
Power Uprate Safety Analysis Report (PUSAR) Generic Disposition Topics

PUSAR SECTION	TOPIC	CLTR[1] GENERIC PARAMETER(S) OR REQUIREMENT(S)	JUSTIFICATION / CLTP VS. CPPU COMPARISON
[[			]]
[[			]]
[[			]]
[[			]]
[[			]]
[[			]]
[[			]]

[1] NEDC-33004P-A, "Licensing Topical Report, Constant Pressure Power Uprate," Revision 4, dated June 2003.
[2] Further explanation of the reload process is contained in the Entergy response to Section 1.C. of the NRC Acceptance Letter (Letter, C. F. Holden, NRC, to M. Kansler, Entergy, "Vermont Yankee Nuclear Power Station – Extended Power Uprate Acceptance Review (TAC No. MC0761)," dated December 15, 2003).

PUSAR SECTION	TOPIC	CLTR[1] GENERIC PARAMETER(S) OR REQUIREMENT(S)	JUSTIFICATION / CLTP VS. CPPU COMPARISON
[[			]]
[[			]]
[[			]]
[[		]]	• Reactor dome pressure is unchanged for CPPU. [[

PUSAR SECTION	TOPIC	CLTR[1] GENERIC PARAMETER(S) OR REQUIREMENT(S)	JUSTIFICATION / CLTP VS. CPPU COMPARISON
			]]
[[		]]	• Reactor dome pressure is unchanged for CPPU. [[ ]]
[[			

PUSAR SECTION	TOPIC	CLTR[1] GENERIC PARAMETER(S) OR REQUIREMENT(S)	JUSTIFICATION / CLTP VS. CPPU COMPARISON
			]]
[[		]]	VYNPS plant procedure addresses these characteristics. [[ ]]
[[		]]	[[ ]] These components are unaffected by CPPU operating conditions.

PUSAR SECTION	TOPIC	CLTR[1] GENERIC PARAMETER(S) OR REQUIREMENT(S)	JUSTIFICATION / CLTP VS. CPPU COMPARISON
[[			]]
[[			]]
[[		]]	Maximum core flow at CLTP and CPPU is 51.4 Mlb/hr.
[[			

PUSAR SECTION	TOPIC	CLTR[1] GENERIC PARAMETER(S) OR REQUIREMENT(S)	JUSTIFICATION / CLTP VS. CPPU COMPARISON

PUSAR SECTION	TOPIC	CLTR[1] GENERIC PARAMETER(S) OR REQUIREMENT(S)	JUSTIFICATION / CLTP VS. CPPU COMPARISON

PUSAR SECTION	TOPIC	CLTR[1] GENERIC PARAMETER(S) OR REQUIREMENT(S)	JUSTIFICATION / CLTP VS. CPPU COMPARISON
			]]
[[			

PUSAR SECTION	TOPIC	CLTR[1] GENERIC PARAMETER(S) OR REQUIREMENT(S)	JUSTIFICATION / CLTP VS. CPPU COMPARISON
			]]
[[		]]	Maximum core flow at CLTP and CPPU is 51.4 Mlb/hr
[[		]]	[[ ]] This is unchanged with CPPU.
[[		]]	• Maximum normal operating dome pressure at CLTP and CPPU is 1025 psia [[

PUSAR SECTION	TOPIC	CLTR[1] GENERIC PARAMETER(S) OR REQUIREMENT(S)	JUSTIFICATION / CLTP VS. CPPU COMPARISON
			3.]]
[[		]]	• Maximum normal operating dome pressure at CLTP and CPPU is 1025 psia • SRV / Spring Safety Valve (SSV) setpoints do remain the same: SRV Nominal Trip Setpoints (NTSPs) – 1080 / 1090 / 1100 psig SSV NTSP - 1240 psig
[[			[[

PUSAR SECTION	TOPIC	CLTR[1] GENERIC PARAMETER(S) OR REQUIREMENT(S)	JUSTIFICATION / CLTP VS. CPPU COMPARISON
		]]	]] • There is no change in maximum normal operating dome pressure CLTP – 1025 psia CPPU – 1025 psia • The SRV/SSV setpoints remain the same: SRV NTSPs – 1080 / 1090 / 1100 psig SSV NTSP - 1240 psig [[ ]]
[[		]]	• Maximum normal operating dome pressure at CLTP and CPPU is 1025 psia • SRV/SSV setpoints do remain the same. SRV NTSPs – 1080 / 1090 / 1100 psig SSV NTSP - 1240 psig • No change was required or made to the system operating parameters or configuration.
[[			• No change was required or made to the system operating parameters or configuration. [[

PUSAR SECTION	TOPIC	CLTR[1] GENERIC PARAMETER(S) OR REQUIREMENT(S)	JUSTIFICATION / CLTP VS. CPPU COMPARISON
		]]	]]
[[			]]
[[		]]	• SRV setpoints do remain the same. SRV NTSPs – 1080 / 1090 / 1100 psig SSV NTSP - 1240 psig [[ ]]
[[			]]
[[			]]
[[			

PUSAR SECTION	TOPIC	CLTR[1] GENERIC PARAMETER(S) OR REQUIREMENT(S)	JUSTIFICATION / CLTP VS. CPPU COMPARISON
			]]
[[			]]
[[			]]
[[			]]
[[			

PUSAR SECTION	TOPIC	CLTR[1] GENERIC PARAMETER(S) OR REQUIREMENT(S)	JUSTIFICATION / CLTP VS. CPPU COMPARISON
			]]
[[			]]
[[			]]
[[			]]
[[			

PUSAR SECTION	TOPIC	CLTR[1] GENERIC PARAMETER(S) OR REQUIREMENT(S)	JUSTIFICATION / CLTP VS. CPPU COMPARISON
			]]
[[		]]	• VYNPS uses all GE14 or earlier fuel. • Thermal power increase: CLTP (same as OLTP) – 1593 MWt CPPU – 1912 MWt Thermal power increase is equal to 20% of OLTP. [[ ]]
[[			]]
[[			]]
[[			

PUSAR SECTION	TOPIC	CLTR[1] GENERIC PARAMETER(S) OR REQUIREMENT(S)	JUSTIFICATION / CLTP VS. CPPU COMPARISON
			]]
[[			]]
[[			]]
[[			

PUSAR SECTION	TOPIC	CLTR[1] GENERIC PARAMETER(S) OR REQUIREMENT(S)	JUSTIFICATION / CLTP VS. CPPU COMPARISON
			]]
[[			]]
[[			

PUSAR SECTION	TOPIC	CLTR[1] GENERIC PARAMETER(S) OR REQUIREMENT(S)	JUSTIFICATION / CLTP VS. CPPU COMPARISON
			]]
[[			]]
[[		]]	[[ ]] VYNPS uses only GE fuel through GE14.
[[			]]
[[			]]
[[			[[ ]] Further, none of the identified parameters are significantly affected by CPPU.

PUSAR SECTION	TOPIC	CLTR[1] GENERIC PARAMETER(S) OR REQUIREMENT(S)	JUSTIFICATION / CLTP VS. CPPU COMPARISON
		]]	
[[			]]
[[		]]	The VYNPS specific parameters are as follows: • Only GE14 and resident GE13 and GE 9 fuel are used for VYNPS CPPU. [[ ]]

PUSAR SECTION	TOPIC	CLTR[1] GENERIC PARAMETER(S) OR REQUIREMENT(S)	JUSTIFICATION / CLTP VS. CPPU COMPARISON
			]]
[[			]]
[[			]]
[[			]]
[[			]]
[[			

PUSAR SECTION	TOPIC	CLTR[1] GENERIC PARAMETER(S) OR REQUIREMENT(S)	JUSTIFICATION / CLTP VS. CPPU COMPARISON
			]]
[[			]]
[[			]]
[[			• The maximum rod line for CPPU is unchanged. [[

PUSAR SECTION	TOPIC	CLTR[1] GENERIC PARAMETER(S) OR REQUIREMENT(S)	JUSTIFICATION / CLTP VS. CPPU COMPARISON
		]]	]]
[[			]]
[[			]]

Table 1

[[

]]

The plant specific parameters used to conclude that the CLTR [[ ]] bounding evaluation is applicable to VYNPS are:

Parameter	Generic Input Criteria	VYNPS-Specific Value
Reactor Power, MWt	≤ 4600	1912
[[		
		]]

All VYNPS-specific values are in compliance with the required generic input. Therefore, the generic analysis is bounding for VYNPS.

Table 2

[[

]]

[[				
1	▪			
2	▪			

[[				
3	▪			
4	▪			
5	▪			

[[				
6	▪			
7	▪			
8	▪			

[[				
9	▪			
10	▪			
11	▪			
12	▪			

[[				
13	▪			
14	▪			
15	▪			

[[				
16	▪			
17	–			
18	▪			

[[				
19	▪			
20	▪			

[[				
21				]]

Docket No. 50-271
BVY 04-009

Attachment 4

Vermont Yankee Nuclear Power Station

Proposed Technical Specification Change No. 263

Supplement No. 4

Extended Power Uprate – NRC Acceptance Review

Revised Safety Evaluation Template for GDC

ITEM 2 – GENERAL DESIGN CRITERIA

(italicized text is from NRC letter of December 15, 2003)

The NRC staff's 12-month review schedule for an EPU request is based on an application using RS-001, "Review Standard for Extended Power Uprates." The NRC staff intends to use the template safety evaluation (SE) in RS-001 when generating a plant-specific SE for the VYNPS power uprate. The template SE provides a draft regulatory evaluation and conclusion for each review area. The NRC staff expected that Entergy would review the template to ensure that it reflects the licensing basis for the plant. Also, you should ensure sufficient technical information is provided so that the NRC staff can verify the regulatory evaluation and develop the technical evaluation to support the conclusion. The template was developed to provide guidance so that the NRC staff review could be completed without extensive requests for additional information.

The NRC staff received your supplements dated October 1 and October 28, 2003, providing a matrix cross-referencing the design criteria within the licensing basis for VYNPS to the General Design Criteria (GDC) in 10 CFR, Part 50, Appendix A. To aid the NRC staff in preparing the plant-specific SE for the VYNPS EPU, please confirm that replacing the numerical values of the GDC in the template regulatory evaluation section of the SE with the corresponding VYNPS design criteria from your matrix would not result in an SE that is inconsistent with the VYNPS licensing basis. If inconsistencies are created by this approach, please provide markups of the template SE in RS-001 identifying and correcting any inconsistencies that would be created.

VY RESPONSE

Because VYNPS is a pre-GDC plant (licensed in March 1972), and its current licensing basis is the 70 proposed General Design Criteria for Nuclear Power Plant Construction Permits (hereinafter referred to as "draft GDC") published in the Federal Register on July 11, 1967 (32FR10213), NRC's template SE for EPU requires modification for application to VYNPS' licensing basis. Appendix F of the Updated Final Safety Analysis Report describes the applicability of the draft GDC to VYNPS.

The final version of the GDC was published in the Federal Register on February 20, 1971, as Appendix A to 10CFR50. Differences between the proposed and final versions of the GDC include a consolidation from 70 to 64 criteria and general elaboration of design requirement details. In general, however, the basic content of the design criteria are consistent between the two versions, and as stated at the time of issuance of the GDC, the Atomic Energy Commission stressed that the final version of the GDC did not reflect new requirements, but were promulgated to more clearly articulate the licensing requirements and practices in effect at the time.

To aid the NRC staff in preparing the VYNPS-specific SE for EPU, VY replaced the numeric values of the GDC in the following, revised template regulatory evaluation section of the SE with the corresponding VYNPS design criteria based on the current licensing basis. Related changes to VYNPS-specific design criteria were also incorporated into the revised safety evaluation template.

SECTION 3.2 of RS-001

TEMPLATE SAFETY EVALUATION

for

BOILING-WATER REACTOR EXTENDED POWER UPRATE

TABLE OF CONTENTS

1.0 INTRODUCTION ..... - 1 -
1.1 Application ..... - 1 -
1.2 Background ..... - 1 -
1.3 Licensee's Approach ..... - 2 -
1.4 Plant Modifications ..... - 2 -
1.5 Method of NRC Staff Review ..... - 3 -

2.0 EVALUATION ..... - 3 -
2.1 Materials and Chemical Engineering ..... - 3 -
2.2 Mechanical and Civil Engineering ..... - 3 -
2.3 Electrical Engineering ..... - 3 -
2.4 Instrumentation and Controls ..... - 4 -
2.5 Plant Systems ..... - 4 -
2.6 Containment Review Considerations ..... - 4 -
2.7 Habitability, Filtration, and Ventilation ..... - 4 -
2.8 Reactor Systems ..... - 4 -
2.9 Source Terms and Radiological Consequences Analyses ..... - 4 -
2.10 Health Physics ..... - 4 -
2.11 Human Performance ..... - 4 -
2.12 Power Ascension and Testing Plan ..... - 4 -
2.13 Risk Evaluation ..... - 4 -

3.0 FACILITY OPERATING LICENSE AND TECHNICAL SPECIFICATION CHANGES ..... - 4 -

4.0 REGULATORY COMMITMENTS ..... - 5 -

5.0 RECOMMENDED AREAS FOR INSPECTION ..... - 5 -

6.0 STATE CONSULTATION ..... - 5 -

7.0 ENVIRONMENTAL CONSIDERATION ..... - 5 -

8.0 CONCLUSION ..... - 6 -

9.0 REFERENCES ..... - 6 -

Attachment: List of Acronyms

SAFETY EVALUATION BY THE OFFICE OF NUCLEAR REACTOR REGULATION

RELATED TO AMENDMENT NO. TO FACILITY OPERATING LICENSE NO. [XXX-XX]

[NAME OF LICENSEE]

[NAME OF FACILITY]

DOCKET NO. 50-[XXX]

1.0 INTRODUCTION

1.1 Application

By application dated [ ], as supplemented by letter[s] dated [ ], the **[Name of Licensee]** (the licensee) requested changes to the Facility Operating License and Technical Specifications (TSs) for the **[Plant Name]**. The supplemental letter[s] dated [ ], provided additional clarifying information that did not expand the scope of the initial application and did not change the Nuclear Regulatory Commission (NRC) staff's original proposed no significant hazards consideration determination as published in the *Federal Register* on **[date] (XX FR XXXX)**.

The proposed changes would increase the maximum steady-state reactor core power level from **[current licensed power level]** megawatts thermal (MWt) to **[power level proposed by the licensee]** MWt, which is an increase of approximately **[##]** percent. The proposed increase in power level is considered an extended power uprate (EPU).

1.2 Background

[Plant Name] is a boiling-water reactor (BWR) plant of the BWR/**[#]** design with a Mark-**[#]** containment. **[Plant Name]** has the following special features/unique designs:

[Insert any special features/unique designs]

The NRC originally licensed **[Plant Name]** on **[date]** for operation at **[original licensed power level]** MWt. **[By Amendment No. [###] dated [ ], the NRC granted a power uprate to [Plant Name] of [##] percent, allowing the plant to be operated at [current licensed power level] MWt.] Therefore, the proposed EPU would result in an increase of approximately [##] percent over the original licensed power level [and [##] percent over the current licensed power level] for [Plant Name].]**

1.3 Licensee's Approach

The licensee's application for the proposed EPU follows the guidance in the Office of Nuclear Reactor Regulation's (NRR's) Review Standard (RS)-001, "Review Standard for Extended Power Uprates," to the extent that the review standard is consistent with the design basis of the plant. Where differences exist between the plant-specific design basis and RS-001, the licensee described the differences and provided evaluations consistent with the design basis of the plant. The licensee also used **[Identify topical reports or other documents used by the licensee for guidance related to the scope of the proposed EPU; NRC staff approvals, ranges of applicability, any limitations/restrictions associated with the documents; and consistency of the licensee's application with the ranges of applicability and limitations/restrictions. The discussion in this section is to cover topical reports and other documents referenced for the overall power uprate process. It is not intended to cover topical reports and other documents for specific methods of analyses. Topical reports and other documents referenced for specific methods of analyses are to be covered in the applicable technical evaluation section of this safety evaluation].**

Insert this sentence if the licensee is planning to implement the EPU in one stage.
[The licensee plans to implement the EPU in one step. The licensee plans to make the modifications necessary to implement the EPU during the refueling outage in [season year (e.g., fall 2003)]. Subsequently, the plant will be operated at [##] MWt starting in Cycle [##].]

Insert this paragraph if the licensee is planning to implement the EPU in stages:
[The licensee plans to implement the EPU in [#] steps of [## and ##] percent. The licensee plans to make modifications necessary to implement the first step during the refueling outage in [season year (e.g., fall 2003)]. Subsequently, the plant will be operated at [##] MWt during Cycle [##]. The remainder of the modifications will be completed during the refueling outage in [season year (e.g., fall 2003)], with subsequent operation at [##] MWt starting in Cycle [##].]

1.4 Plant Modifications

The licensee has determined that several plant modifications are necessary to implement the proposed EPU. The following is a list of these modifications and the licensee's proposed schedule for completing them.

[Provide a list of plant modifications.]

The NRC staff's evaluation of the licensee's proposed plant modifications is provided in Section 2.0 of this safety evaluation.

1.5 Method of NRC Staff Review

The NRC staff reviewed the licensee's application to ensure that (1) there is reasonable assurance that the health and safety of the public will not be endangered by operation in the proposed manner, (2) activities proposed will be conducted in compliance with the Commission's regulations, and (3) the issuance of the amendments will not be inimical to the common defense and security or to the health and safety of the public. The purpose of the NRC staff's review is to evaluate the licensee's assessment of the impact of the proposed EPU on design-basis analyses. The NRC staff evaluated the licensee's application and supplements. The NRC staff also evaluated **[Include additional review items, as necessary (e.g., audits of certain information at the plant and vendor sites, and independent analyses), for areas where such analyses were deemed appropriate by the NRC staff].**

In areas where the licensee and its contractors used NRC-approved or widely accepted methods in performing analyses related to the proposed EPU, the NRC staff reviewed relevant material to ensure that the licensee/contractor used the methods consistent with the limitations and restrictions placed on the methods. In addition, the NRC staff considered the affects of the changes in plant operating conditions on the use of these methods to ensure that the methods are appropriate for use at the proposed EPU conditions. Details of the NRC staff's review are provided in Section 2.0 of this safety evaluation.

Audits of analyses supporting the EPU were conducted in relation to the following topics:

[Provide a list of areas for which audits were performed.]

The results of the audits are discussed in section 2.0 of this safety evaluation.

Independent NRC staff calculations were performed in relation to the following topics:

[Provide a list of areas for which independent NRC staff calculations were performed.]

The results of the calculations are discussed in section 2.0 of this safety evaluation.

2.0 EVALUATION

2.1 Materials and Chemical Engineering

SEE INSERT 1 FOR SECTION 3.2 OF RS-001

2.2 Mechanical and Civil Engineering

SEE INSERT 2 FOR SECTION 3.2 OF RS-001

2.3 Electrical Engineering

SEE INSERT 3 FOR SECTION 3.2 OF RS-001

2.4 Instrumentation and Controls

SEE INSERT 4 FOR SECTION 3.2 OF RS-001

2.5 Plant Systems

SEE INSERT 5 FOR SECTION 3.2 OF RS-001

2.6 Containment Review Considerations

SEE INSERT 6 FOR SECTION 3.2 OF RS-001

2.7 Habitability, Filtration, and Ventilation

SEE INSERT 7 FOR SECTION 3.2 OF RS-001

2.8 Reactor Systems

SEE INSERT 8 FOR SECTION 3.2 OF RS-001

2.9 Source Terms and Radiological Consequences Analyses

SEE INSERT 9 FOR SECTION 3.2 OF RS-001

2.10 Health Physics

SEE INSERT 10 FOR SECTION 3.2 OF RS-001

2.11 Human Performance

SEE INSERT 11 FOR SECTION 3.2 OF RS-001

2.12 Power Ascension and Testing Plan

SEE INSERT 12 FOR SECTION 3.2 OF RS-001

2.13 Risk Evaluation

SEE INSERT 13 FOR SECTION 3.2 OF RS-001

3.0 FACILITY OPERATING LICENSE AND TECHNICAL SPECIFICATION CHANGES

To achieve the EPU, the licensee proposed the following changes to the Facility Operating License and TSs for **[Plant Name]**.

[Provide a list of license and TSs changes (including license conditions) and an NRC staff evaluation of each.]

4.0 REGULATORY COMMITMENTS

Insert the following sentence if the licensee has not made any regulatory commitments in support of the EPU.
The licensee has made no regulatory commitments in its application for the EPU.

Insert the following if the licensee has made regulatory commitments in support of the EPU.
The licensee has made the following regulatory commitment(s):

[Provide a summary of each regulatory commitment made by the licensee.]

The NRC staff finds that reasonable controls for the implementation and for subsequent evaluation of proposed changes pertaining to the above regulatory commitment(s) are best provided by the licensee's administrative processes, including its commitment management program. The above regulatory commitments do not warrant the creation of regulatory requirements (items requiring prior NRC approval of subsequent changes).

5.0 RECOMMENDED AREAS FOR INSPECTION

As described above, the NRC staff has conducted an extensive review of the licensee's plans and analyses related to the proposed EPU and concluded that they are acceptable. The NRC staff's review has identified the following areas for consideration by the NRC inspection staff during the licensee's implementation of the proposed EPU. These areas are recommended based on past experience with EPUs, the extent and unique nature of modifications necessary to implement the proposed EPU, and new conditions of operation necessary for the proposed EPU. They do not constitute inspection requirements, but are intended to give inspectors insight into important bases for approving the EPU.

[Provide list of recommended areas for inspection.]

6.0 STATE CONSULTATION

In accordance with the Commission's regulations, the **[Name of State]** State official was notified of the proposed issuance of the amendment. The State official had **[no]** comments.
[If comments were received, address them here.]

7.0 ENVIRONMENTAL CONSIDERATION

Pursuant to 10 CFR 51.21, 51.32, 51.33, and 51.35, a draft Environmental Assessment and finding of no significant impact was prepared and published in the *Federal Register* on **[Date] (FR)**. The draft Environmental Assessment provided a 30-day opportunity for public comment. *If no comments were received, use the following sentence:* **[No comments were received on the draft Environmental Assessment.]** *If comments were received, use the following sentence*: **[The NRC staff received comments which were addressed in the final environmental assessment.]** The final Environmental Assessment was published in the *Federal Register* on **[Date] (FR)**. Accordingly, based upon the environmental assessment, the Commission has determined that the issuance of this amendment will not have a significant effect on the quality of the human environment.

8.0 CONCLUSION

The Commission has concluded, based on the considerations discussed above, that: (1) there is reasonable assurance that the health and safety of the public will not be endangered by operation in the proposed manner, (2) such activities will be conducted in compliance with the Commission's regulations, and (3) the issuance of the amendments will not be inimical to the common defense and security or to the health and safety of the public.

9.0 REFERENCES

1. RS-001, Revision 0, "Review Standard for Extended Power Uprates," December 2003.

2. **[Insert additional references as necessary]**

Attachment: List of Acronyms

Principal Contributors:

Date:

LIST OF ACRONYMS

AAC	alternate ac sources
ac	alternating current
ALARA	as low as reasonably achievable
ARAVS	auxiliary and radwaste area ventilation system
ARI	alternate rod insertion
ASME	American Society of Mechanical Engineers
ATWS	anticipated transient without scram
B&PV	boiler and pressure vessel
BL	bulletin
BOP	balance-of-plant
BTP	branch technical position
BWR	boiling-water reactor
BWRVIP	Boiling Water Reactor Vessel and Internals Project
CDF	core damage frequency
CFR	*Code of Federal Reguations*
CFS	condensate and feedwater system
CRAVS	control room area ventilation system
CRDA	control rod drop accident
CRDM	control rod drive mechanism
CRDS	control rod drive system
CUF	cumulative usage factor
CWS	circulating water system
DBA	design-basis accident
DBLOCA	design-basis loss-of-coolant accident
dc	direct current
DG	draft guide

EAB	exclusion area boundary
ECCS	emergency core cooling system
EFDS	equipment and floor drainage system
EPG	emergency procedure guideline
EPRI	Electric Power Research Institute
EPU	extended power uprate
EQ	environmental qualification
ESF	engineered safety feature
ESFAS	engineered safety feature actuation system
ESFVS	engineered safety feature ventilation system
FAC	flow-accelerated corrosion
FHA	fuel handling accident
FPP	fire protection program
GDC	general design criterion (or criteria)
GL	generic letter
I&C	instrumentation and controls
IN	information notice
IPE	individual plant examination
IPEEE	individual plant examination of external events
LERF	large early release frequency
LLHS	light load handling system
LOCA	loss-of-coolant accident
LOOP	loss of offsite power
LPZ	low population zone
MC	main condenser
MCES	main condenser evacuation system
MOV	motor-operated valve
MSIV	main steam isolation valve

MSIVLCS	main steam isolation valve leakage control system
MSLB	main steamline break
MSSS	main steam supply system
MWt	megawatts thermal
NEI	Nuclear Energy Institute
NPSH	net positive suction head
NRC	Nuclear Regulatory Commission
NRR	Office of Nuclear Reactor Regulation
NSSS	nuclear steam supply system
O&M	operations and maintenance
P-T	pressure-temperature
PWSCC	primary water stress-corrosion cracking
RCIC	reactor core isolation cooling
RCPB	reactor coolant pressure boundary
RCS	reactor coolant system
RG	regulatory guide
RHR	residual heat removal
RS	review standard
RWCS	reactor water cleanup system
SAFDL	specified acceptable fuel design limit
SAG	severe accident guideline
SAR	Safety Analysis Report
SBO	station blackout
SFP	spent fuel pool
SFPAVS	spent fuel pool area ventilation system
SGTS	standby gas treatment system
SLCS	standby liquid control system
SRP	Standard Review Plan

SSCs	structures, systems, and components
SSE	safe-shutdown earthquake
SWMS	solid waste management system
SWS	service water system
TAVS	turbine area ventilation system
TBS	turbine bypass system
TCV	turbine control valve
TEDE	total effective dose equivalent
TS	technical specification
UHS	ultimate heat sink

INSERT 1

FOR

SECTION 3.2 - BWR TEMPLATE SAFETY EVALUATION

2.1 Materials and Chemical Engineering

2.1.1 Reactor Vessel Material Surveillance Program

Regulatory Evaluation

[Note: VYNPS intends to participate in the BWR Integrated Surveillance Program. A license amendment request is currently pending in this regard.]

The reactor vessel material surveillance program provides a means for determining and monitoring the fracture toughness of the reactor vessel beltline materials to support analyses for ensuring the structural integrity of the ferritic components of the reactor vessel. The NRC staff's review primarily focused on the effects of the proposed EPU on the licensee's reactor vessel surveillance capsule withdrawal schedule. The NRC's acceptance criteria are based on (1) draft General Design Criterion[1] (GDC)-9, insofar as it requires that the reactor coolant pressure boundary (RCPB) be designed and constructed so as to have an exceedingly low probability of gross rupture or significant leakage; (2) draft GDC-33, insofar as it requires that the RCPB be capable of accommodating without rupture, and with only limited allowance for energy absorption through plastic deformation, the static and dynamic loads imposed on any boundary component as a result of any inadvertent and sudden release of energy to the coolant; (3) draft GDC-34 insofar as it requires that the RCPB be designed to minimize the probability of rapidly propagating type failures; (4) 10 CFR Part 50, Appendix H, which provides for monitoring changes in the fracture toughness properties of materials in the reactor vessel beltline region; and (5) 10 CFR 50.60, which requires compliance with the requirements of 10 CFR Part 50, Appendix H. Specific review criteria are contained in Standard Review Plan (SRP) Section 5.3.1 and other guidance provided in Matrix 1 of RS-001.

Technical Evaluation

[Insert technical evaluation. The technical evaluation should (1) clearly explain why the proposed changes satisfy each of the requirements in the regulatory evaluation and (2) provide a clear link to the conclusions reached by the NRC staff, as documented in the conclusion section.]

Conclusion

The NRC staff has reviewed the licensee's evaluation of the effects of the proposed EPU on the reactor vessel surveillance withdrawal schedule and concludes that the licensee has adequately addressed changes in neutron fluence and their effects on the schedule. The NRC staff further concludes that the reactor vessel capsule withdrawal schedule is appropriate to ensure that the material surveillance program will continue to meet the requirements of 10 CFR Part 50, Appendix H, and 10 CFR 50.60, and will provide the licensee with information to ensure continued compliance with draft GDC-9, 33, and 34 in this respect following implementation of the proposed EPU. Therefore, the NRC staff finds the proposed EPU acceptable with respect to the reactor vessel material surveillance program.

---

[1] The Vermont Yankee Nuclear Power Station was licensed in accordance with the 70 draft General Design Criteria proposed by the Atomic Energy Commission in *Federal Register* 32FR10213, July 11, 1967.

2.1.2 Pressure-Temperature Limits and Upper-Shelf Energy

Regulatory Evaluation

Pressure-temperature (P-T) limits are established to ensure the structural integrity of the ferritic components of the RCPB during any condition of normal operation, including anticipated operational occurrences and hydrostatic tests. The NRC staff's review of P-T limits covered the P-T limits methodology and the calculations for the number of effective full power years specified for the proposed EPU, considering neutron embrittlement effects and using linear elastic fracture mechanics. The NRC's acceptance criteria for P-T limits are based on (1) draft GDC-9, insofar as it requires that the RCPB be designed and constructed so as to have an exceedingly low probability of gross rupture or significant leakage; (2) draft GDC-33, insofar as it requires that the RCPB be capable of accommodating without rupture, and with only limited allowance for energy absorption through plastic deformation, the static and dynamic loads imposed on any boundary component as a result of any inadvertent and sudden release of energy to the coolant; (3) draft GDC-34 insofar as it requires that the RCPB be designed to minimize the probability of rapidly propagating type failures; (4) draft GDC-35 insofar as it requires that service temperatures for RCPB components constructed of ferritic materials ensure the structural integrity of such components when subjected to potential loadings; (5)10 CFR Part 50, Appendix G, which specifies fracture toughness requirements for ferritic components of the RCPB; and (6) 10 CFR 50.60, which requires compliance with the requirements of 10 CFR Part 50, Appendix G. Specific review criteria are contained in SRP Section 5.3.2 and other guidance provided in Matrix 1 of RS-001.

Technical Evaluation

[Insert technical evaluation. The technical evaluation should (1) clearly explain why the proposed changes satisfy each of the requirements in the regulatory evaluation and (2) provide a clear link to the conclusions reached by the NRC staff, as documented in the conclusion section.]

Conclusion

The NRC staff has reviewed the licensee's evaluation of the effects of the proposed EPU on the P-T limits for the plant and concludes that the licensee has adequately addressed changes in neutron fluence and their effects on the P-T limits. The NRC staff further concludes that the licensee has demonstrated the validity of the proposed P-T limits for operation under the proposed EPU conditions. Based on this, the NRC staff concludes that the proposed P-T limits will continue to meet the requirements of 10 CFR Part 50, Appendix G, and 10 CFR 50.60 and will enable the licensee to comply with draft GDC-9, 33, 34, and 35 in this respect following implementation of the proposed EPU. Therefore, the NRC staff finds the proposed EPU acceptable with respect to the proposed P-T limits.

2.1.3 Reactor Internal and Core Support Materials

Regulatory Evaluation

The reactor internals and core supports include structures, systems, and components (SSCs) that perform safety functions or whose failure could affect safety functions performed by other SSCs. These safety functions include reactivity monitoring and control, core cooling, and fission product confinement (within both the fuel cladding and the reactor coolant system (RCS)). The NRC staff's review covered the materials' specifications and mechanical properties, welds, weld controls, nondestructive examination procedures, corrosion resistance, and susceptibility to degradation. The NRC's acceptance criteria for reactor internal and core support materials are based on draft GDC-1 and 10 CFR 50.55a for material specifications, controls on welding, and inspection of reactor internals and core supports. Specific review criteria are contained in SRP Section 4.5.2 and Boiling Water Reactor Vessel and Internals Project (BWRVIP)-26.

Technical Evaluation

[Insert technical evaluation. The technical evaluation should (1) clearly explain why the proposed changes satisfy each of the requirements in the regulatory evaluation and (2) provide a clear link to the conclusions reached by the NRC staff, as documented in the conclusion section.]

Conclusion

The NRC staff has reviewed the licensee's evaluation of the effects of the proposed EPU on the susceptibility of reactor internal and core support materials to known degradation mechanisms and concludes that the licensee has identified appropriate degradation management programs to address the effects of changes in operating temperature and neutron fluence on the integrity of reactor internal and core support materials. The NRC staff further concludes that the licensee has demonstrated that the reactor internal and core support materials will continue to be acceptable and will continue to meet the requirements of draft GDC-1 and 10 CFR 50.55a with respect to material specifications, welding controls, and inspection following implementation of the proposed EPU. Therefore, the NRC staff finds the proposed EPU acceptable with respect to reactor internal and core support materials.

2.1.4 Reactor Coolant Pressure Boundary Materials

Regulatory Evaluation

The RCPB defines the boundary of systems and components containing the high-pressure fluids produced in the reactor. The NRC staff's review of RCPB materials covered their specifications, compatibility with the reactor coolant, fabrication and processing, susceptibility to degradation, and degradation management programs. The NRC's acceptance criteria for RCPB materials are based on (1) 10 CFR 50.55a and draft GDC-1, insofar as they require that SSCs important to safety be designed, fabricated, erected, constructed, tested, and inspected to quality standards commensurate with the importance of the safety functions to be performed; (2) draft GDC-40 and 42, insofar as they require that protection be provided for engineered safety features (ESFs) against the dynamic effects and missiles that might result from plant equipment failures, as well as the effects of a loss-of-coolant accident; (3) draft GDC-9 and 33, insofar as they require that the RCPB be designed and constructed so as to have an exceedingly low probability of gross rupture or significant leakage; (4) draft GDC-34 insofar as it requires that the RCPB be designed to minimize the probability of rapidly propagating type failures; (5) draft GDC-35 insofar as it requires that service temperatures for RCPB components constructed of ferritic materials ensure the structural integrity of such components when subjected to potential loadings; and (6) 10 CFR Part 50, Appendix G, which specifies fracture toughness requirements for ferritic components of the RCPB. Specific review criteria are contained in SRP Section 5.2.3 and other guidance provided in Matrix 1 of RS-001. Additional review guidance for thermal embrittlement of cast austenitic stainless steel components is contained in a letter from C. Grimes, NRC, to D. Walters, Nuclear Energy Institute (NEI), dated May 19, 2000.

Technical Evaluation

[Insert technical evaluation. The technical evaluation should (1) clearly explain why the proposed changes satisfy each of the requirements in the regulatory evaluation and (2) provide a clear link to the conclusions reached by the NRC staff, as documented in the conclusion section.]

Conclusion

The NRC staff has reviewed the licensee's evaluation of the effects of the proposed EPU on the susceptibility of RCPB materials to known degradation mechanisms and concludes that the licensee has identified appropriate degradation management programs to address the effects of changes in system operating temperature on the integrity of RCPB materials. The NRC staff further concludes that the licensee has demonstrated that the RCPB materials will continue to be acceptable following implementation of the proposed EPU and will continue to meet the requirements of draft GDC-1, 9, 33, 34, 35, 40, and 42, 10 CFR Part 50, Appendix G, and 10 CFR 50.55a. Therefore, the NRC staff finds the proposed EPU acceptable with respect to RCPB materials.

2.1.5 Protective Coating Systems (Paints) - Organic Materials

Regulatory Evaluation

Protective coating systems (paints) provide a means for protecting the surfaces of facilities and equipment from corrosion and contamination from radionuclides and also provide wear protection during plant operation and maintenance activities. The NRC staff's review covered protective coating systems used inside the containment for their suitability for and stability under design-basis loss-of-coolant accident (DBLOCA) conditions, considering radiation and chemical effects. The NRC's acceptance criteria for protective coating systems are based on (1) 10 CFR Part 50, Appendix B, which states quality assurance requirements for the design, fabrication, and construction of safety-related SSCs and (2) Regulatory Guide 1.54, Revision 1, for guidance on application and performance monitoring of coatings in nuclear power plants. Specific review criteria are contained in SRP Section 6.1.2.

Technical Evaluation

[Insert technical evaluation. The technical evaluation should (1) clearly explain why the proposed changes satisfy each of the requirements in the regulatory evaluation and (2) provide a clear link to the conclusions reached by the NRC staff, as documented in the conclusion section.]

Conclusion

The NRC staff has reviewed the licensee's evaluation of the effects of the proposed EPU on protective coating systems and concludes that the licensee has appropriately addressed the impact of changes in conditions following a DBLOCA and their effects on the protective coatings. The NRC staff further concludes that the licensee has demonstrated that the protective coatings will continue to be acceptable following implementation of the proposed EPU and will continue to meet the requirements of 10 CFR Part 50, Appendix B. Therefore, the NRC staff finds the proposed EPU acceptable with respect to protective coatings systems.

2.1.6 Flow-Accelerated Corrosion

Regulatory Evaluation

Flow-accelerated corrosion (FAC) is a corrosion mechanism occurring in carbon steel components exposed to flowing single- or two-phase water. Components made from stainless steel are immune to FAC, and FAC is significantly reduced in components containing small amounts of chromium or molybdenum. The rates of material loss due to FAC depend on velocity of flow, fluid temperature, steam quality, oxygen content, and pH. During plant operation, control of these parameters is limited and the optimum conditions for minimizing FAC effects, in most cases, cannot be achieved. Loss of material by FAC will, therefore, occur. The NRC staff has reviewed the effects of the proposed EPU on FAC and the adequacy of the licensee's FAC program to predict the rate of loss so that repair or replacement of damaged components could be made before they reach critical thickness. The licensee's FAC program is based on NUREG-1344, GL 89-08, and the guidelines in Electric Power Research Institute (EPRI) Report NSAC-202L-R2. It consists of predicting loss of material using the CHECWORKS computer code, and visual inspection and volumetric examination of the affected components. The NRC's acceptance criteria are based on the structural evaluation of the minimum acceptable wall thickness for the components undergoing degradation by FAC.

Technical Evaluation

[Insert technical evaluation. The technical evaluation should (1) clearly explain why the proposed changes satisfy each of the requirements in the regulatory evaluation and (2) provide a clear link to the conclusions reached by the NRC staff, as documented in the conclusion section.]

Conclusions

The NRC staff has reviewed the licensee's evaluation of the effect of the proposed EPU on the FAC analysis for the plant and concludes that the licensee has adequately addressed changes in the plant operating conditions on the FAC analysis. The NRC staff further concludes that the licensee has demonstrated that the updated analyses will predict the loss of material by FAC and will ensure timely repair or replacement of degraded components following implementation of the proposed EPU. Therefore, the NRC staff finds the proposed EPU acceptable with respect to FAC.

2.1.7 Reactor Water Cleanup System

Regulatory Evaluation

The reactor water cleanup system (RWCS) provides a means for maintaining reactor water quality by filtration and ion exchange and a path for removal of reactor coolant when necessary. Portions of the RWCS comprise the RCPB. The NRC staff's review of the RWCS included component design parameters for flow, temperature, pressure, heat removal capability, and impurity removal capability; and the instrumentation and process controls for proper system operation and isolation. The review consisted of evaluating the adequacy of the plant's TSs in these areas under the proposed EPU conditions. The NRC's acceptance criteria for the RWCS are based on (1) draft GDC-9, insofar as it requires that the RCPB be designed and constructed so as to have an exceedingly low probability of gross rupture or significant leakage; (2) draft GDC-70, insofar as it requires that the plant design include means to control the release of radioactive effluents; and (3) draft GDC-51, insofar as it requires that systems that contain radioactivity be designed with appropriate confinement. Specific review criteria are contained in SRP Section 5.4.8.

Technical Evaluation

[Insert technical evaluation. The technical evaluation should (1) clearly explain why the proposed changes satisfy each of the requirements in the regulatory evaluation and (2) provide a clear link to the conclusions reached by the NRC staff, as documented in the conclusion section.]

Conclusion

The NRC staff has reviewed the licensee's evaluation of the effects of the proposed EPU on the RWCS and concludes that the licensee has adequately addressed changes in impurity levels and pressure and their effects on the RWCS. The NRC staff further concludes that the licensee has demonstrated that the RWCS will continue to be acceptable following implementation of the proposed EPU and will continue to meet the requirements of draft GDC-9, 51, and 70. Therefore, the NRC staff finds the proposed EPU acceptable with respect to the RWCS.

[2.1.8 Additional Review Areas (Materials and Chemical Engineering)]

[Insert Regulatory Evaluation, Technical Evaluation, and Conclusion sections as necessary]

INSERT 2

FOR

SECTION 3.2 - BWR TEMPLATE SAFETY EVALUATION

2.2 Mechanical and Civil Engineering

2.2.1 Pipe Rupture Locations and Associated Dynamic Effects

Regulatory Evaluation

SSCs important to safety could be impacted by the pipe-whip dynamic effects of a pipe rupture. The NRC staff conducted a review of pipe rupture analyses to ensure that SSCs important to safety are adequately protected from the effects of pipe ruptures. The NRC staff's review covered (1) the implementation of criteria for defining pipe break and crack locations and configurations, (2) the implementation of criteria dealing with special features, such as augmented inservice inspection (ISI) programs or the use of special protective devices such as pipe-whip restraints, (3) pipe-whip dynamic analyses and results, including the jet thrust and impingement forcing functions and pipe-whip dynamic effects, and (4) the design adequacy of supports for SSCs provided to ensure that the intended design functions of the SSCs will not be impaired to an unacceptable level as a result of pipe-whip or jet impingement loadings. The NRC staff's review focused on the effects that the proposed EPU may have on items (1) thru (4) above. The NRC's acceptance criteria are based on draft GDC-40 insofar as it requires that protection be provided for ESFs against the dynamic effects and missiles that might result from plant equipment failures. Specific review criteria are contained in SRP Section 3.6.2.

Technical Evaluation

[Insert technical evaluation. The technical evaluation should (1) clearly explain why the proposed changes satisfy each of the requirements in the regulatory evaluation and (2) provide a clear link to the conclusions reached by the NRC staff, as documented in the conclusion section.]

Conclusion

The NRC staff has reviewed the licensee's evaluations related to determinations of rupture locations and associated dynamic effects and concludes that the licensee has adequately addressed the effects of the proposed EPU on them. The NRC staff further concludes that the licensee has demonstrated that ESFs will continue to meet the requirements of draft GDC-40 following implementation of the proposed EPU. Therefore, the NRC staff finds the proposed EPU acceptable with respect to the determination of rupture locations and dynamic effects associated with the postulated rupture of piping.

2.2.2 Pressure-Retaining Components and Component Supports

Regulatory Evaluation

The NRC staff has reviewed the structural integrity of pressure-retaining components (and their supports) designed in accordance with the American Society of Mechanical Engineers (ASME) *Boiler and Pressure Vessel Code* (B&PV Code), Section III, Division 1, and draft GDC 1, 2, 9, 33, 40 and 42. The NRC staff's review focused on the effects of the proposed EPU on the design input parameters and the design-basis loads and load combinations for normal operating, upset, emergency, and faulted conditions. The NRC staff's review covered (1) the analyses of flow-induced vibration and (2) the analytical methodologies, assumptions, ASME Code editions, and computer programs used for these analyses. The NRC staff's review also included a comparison of the resulting stresses and cumulative fatigue usage factors (CUFs) against the code-allowable limits. The NRC's acceptance criteria are based on (1) 10 CFR 50.55a and draft GDC-1, insofar as they require that those systems and components which are essential to the prevention of accidents which could affect the public health and safety or to mitigation of their consequences be designed, fabricated, erected, constructed, tested, and inspected to quality standards commensurate with the importance of the safety functions to be performed; (2) draft GDC-2, insofar as it requires that those systems and components which are essential to the prevention of accidents which could affect the public health and safety or to mitigation of their consequences be designed to withstand the effects of earthquakes combined with the effects of normal or accident conditions; (3) draft GDC-40 and 42, insofar as they require that protection be provide for ESFs against the dynamic effects that might result from plant equipment failures, as well as the effects of a loss of coolant accident; and (4) draft GDC-9 and 33, insofar as they require that the RCPB be designed and constructed so as to have an exceedingly low probability of RCPB gross rupture or significant leakage; and (5) draft GDC-34 insofar as it requires that the RCPB be designed to minimize the probability of rapidly propagating type failures. Specific review criteria are contained in SRP Sections 3.9.1, 3.9.2, 3.9.3, and 5.2.1.1; and other guidance provided in Matrix 2 of RS-001.

Technical Evaluation

Nuclear Steam Supply System Piping, Components, and Supports

[Insert technical evaluation for nuclear steam supply system (NSSS) piping, components, and supports. Include an intermediate conclusion in the form of "Because [summarize reasons], the NSSS piping, components, and supports are adequate under the proposed EPU conditions."]

Balance-of-Plant Piping, Components, and Supports

[Insert technical evaluation for balance-of-plant piping, components, and supports. Include an intermediate conclusion in the form of "Because [summarize reasons], the balance-of-plant piping, components, and supports are adequate under the proposed EPU conditions."]

Reactor Vessel and Supports

[Insert technical evaluation for reactor vessel and supports. Include an intermediate conclusion in the form of "Because [summarize reasons], the reactor vessel and supports are adequate under the proposed EPU conditions."]

Control Rod Drive Mechanism

[Insert technical evaluation for control rod drive mechanism. Include an intermediate conclusion in the form of "Because [summarize reasons], the control rod drive mechanism is adequate under the proposed EPU conditions."]

Recirculation Pumps and Supports

[Insert technical evaluation for reactor coolant pumps and supports. Include an intermediate conclusion in the form of "Because [summarize reasons], the recirculation pumps and supports are adequate under the proposed EPU conditions."]

Conclusion

The NRC staff has reviewed the licensee's evaluations related to the structural integrity of pressure-retaining components and their supports. For the reasons set forth above, the NRC staff concludes that the licensee has adequately addressed the effects of the proposed EPU on these components and their supports. Based on the above, the NRC staff further concludes that the licensee has demonstrated that pressure-retaining components and their supports will continue to meet the requirements of 10 CFR 50.55a, draft GDC-1, 2, 9, 33, 34, 40, and 42 following implementation of the proposed EPU. Therefore, the NRC staff finds the proposed EPU acceptable with respect to the structural integrity of the pressure-retaining components and their supports.

2.2.3 Reactor Pressure Vessel Internals and Core Supports

Regulatory Evaluation

Reactor pressure vessel internals consist of all the structural and mechanical elements inside the reactor vessel, including core support structures. The NRC staff reviewed the effects of the proposed EPU on the design input parameters and the design-basis loads and load combinations for the reactor internals for normal operation, upset, emergency, and faulted conditions. These include pressure differences and thermal effects for normal operation, transient pressure loads associated with loss-of-coolant accidents (LOCAs), and the identification of design transient occurrences. The NRC staff's review covered (1) the analyses of flow-induced vibration for safety-related and non-safety-related reactor internal components and (2) the analytical methodologies, assumptions, ASME Code editions, and computer programs used for these analyses. The NRC staff's review also included a comparison of the resulting stresses and CUFs against the corresponding Code-allowable limits. The NRC's acceptance criteria are based on (1) 10 CFR 50.55a and draft GDC-1, insofar as they require that those systems and components which are essential to the prevention of accidents which could affect the public health and safety or to mitigation of their consequences be designed, fabricated, erected, constructed, tested, and inspected to quality standards commensurate with the importance of the safety functions to be performed; (2) draft GDC-2, insofar as it requires that those systems and components which are essential to the prevention of accidents which could affect the public health and safety or to mitigation of their consequences be designed to withstand the effects of earthquakes combined with the effects of normal or accident conditions; (3) draft GDC-40 and 42, insofar as they require that protection be provided for ESFs against the dynamic effects and missiles that might result from plant equipment failures, as well as the effects of a loss of coolant accident; and (4) draft GDC-6, insofar as it requires that the reactor core be designed with appropriate margin to assure that acceptable fuel damage limits are not exceeded during any condition of normal operation, including the effects of anticipated operational occurrences. Specific review criteria are contained in SRP Sections 3.9.1, 3.9.2, 3.9.3, and 3.9.5; and other guidance provided in Matrix 2 of RS-001.

Technical Evaluation

[Insert technical evaluation. The technical evaluation should (1) clearly explain why the proposed changes satisfy each of the requirements in the regulatory evaluation and (2) provide a clear link to the conclusions reached by the NRC staff, as documented in the conclusion section.]

Conclusion

The NRC staff has reviewed the licensee's evaluations related to the structural integrity of reactor internals and core supports and concludes that the licensee has adequately addressed the effects of the proposed EPU on the reactor internals and core supports. The NRC staff further concludes that the licensee has demonstrated that the reactor internals and core supports will continue to meet the requirements of 10 CFR 50.55a, draft GDC-1, 2, 6, 40, and 42 following implementation of the proposed EPU. Therefore, the NRC staff finds the proposed EPU acceptable with respect to the design of the reactor internal and core supports.

2.2.4 Safety-Related Valves and Pumps

Regulatory Evaluation

The NRC's staff's review included certain safety-related pumps and valves typically designated as Class 1, 2, or 3 under Section III of the ASME B&PV Code and within the scope of Section XI of the ASME B&PV Code and the ASME Operations and Maintenance (O&M) Code, as applicable. The NRC staff's review focused on the effects of the proposed EPU on the required functional performance of the valves and pumps. The review also covered any impacts that the proposed EPU may have on the licensee's motor-operated valve (MOV) programs related to GL 89-10, GL 96-05, and GL 95-07. The NRC staff also evaluated the licensee's consideration of lessons learned from the MOV program and the application of those lessons learned to other safety-related power-operated valves. The NRC's acceptance criteria are based on (1) draft GDC-1, insofar as it requires that those systems and components which are essential to the prevention of accidents which could affect the public health and safety or to mitigation of their consequences be designed, fabricated, erected, and tested to quality standards commensurate with the importance of the safety functions to be performed; (2) draft GDC-38, 46, 47, 48, 59, 60, 61, 63, 64, and 65 insofar as they require that the emergency core cooling system (ECCS), the containment heat removal system, the containment atomospheric cleanup systems, and the cooling water system, respectively, be designed to permit appropriate periodic testing to ensure the leak-tight integrity and performance of their active components; (3) draft GDC-57, insofar as it requires that piping systems penetrating containment be designed with the capability to periodically test the operability of the isolation valves to determine if valve leakage is within acceptable limits; and (4) 10 CFR 50.55a(f), insofar as it requires that pumps and valves subject to that section must meet the inservice testing program requirements identified in that section. Specific review criteria are contained in SRP Sections 3.9.3 and 3.9.6; and other guidance provided in Matrix 2 of RS-001.

Technical Evaluation

[Insert technical evaluation. The technical evaluation should (1) clearly explain why the proposed changes satisfy each of the requirements in the regulatory evaluation and (2) provide a clear link to the conclusions reached by the NRC staff, as documented in the conclusion section.]

Conclusion

The NRC staff has reviewed the licensee's assessments related to the functional performance of safety-related valves and pumps and concludes that the licensee has adequately addressed the effects of the proposed EPU on safety-related pumps and valves. The NRC staff further concludes that the licensee has adequately evaluated the effects of the proposed EPU on its MOV programs related to GL 89-10, GL 96-05, and GL 95-07, and the lessons learned from those programs to other safety-related, power-operated valves. Based on this, the NRC staff concludes that the licensee has demonstrated that safety-related valves and pumps will continue to meet the requirements of draft GDC-1, 38, 46, 47, 48, 57, 59, 60, 61, 63, 64, and 65, and 10 CFR 50.55a(f) following implementation of the proposed EPU. Therefore, the NRC staff finds the proposed EPU acceptable with respect to safety-related valves and pumps.

2.2.5 Seismic and Dynamic Qualification of Mechanical and Electrical Equipment

Regulatory Evaluation

Mechanical and electrical equipment covered by this section includes equipment associated with systems that are essential to emergency reactor shutdown, containment isolation, reactor core cooling, and containment and reactor heat removal. Equipment associated with systems essential to preventing significant releases of radioactive materials to the environment are also covered by this section. The NRC staff's review focused on the effects of the proposed EPU on the qualification of the equipment to withstand seismic events and the dynamic effects associated pipe-whip and jet impingement forces. The primary input motions due to the safe shutdown earthquake (SSE) are not affected by an EPU. The NRC's acceptance criteria are based on (1) draft GDC-1, insofar as it requires that that those systems and components which are essential to the prevention of accidents which could affect the public health and safety or to mitigation of their consequences be designed, fabricated, erected, and tested to quality standards commensurate with the importance of the safety functions to be performed; (2) draft GDC-2, insofar as it requires that those systems and components which are essential to the prevention of accidents which could affect the public health and safety or to mitigation of their consequences be designed to withstand the effects of earthquakes combined with the effects of normal or accident conditions; (3) draft GDC-40 and 42, insofar as they require that protection be provided for ESFs against the dynamic effects and missiles that might result from plant equipment failures, as well as the effects of a loss of coolant accident; (4) draft GDC-9 and 33, insofar as they require that the RCPB be designed and constructed so as to have an exceedingly low probability of gross rupture or significant leakage; (5) draft GDC-34 insofar as it requires that the RCPB be designed to minimize the probability of rapidly propagating type failures; and (6) 10 CFR Part 50, Appendix B, which sets quality assurance requirements for safety-related equipment. Specific review criteria are contained in SRP Section 3.10.

Technical Evaluation

[Insert technical evaluation. The technical evaluation should (1) clearly explain why the proposed changes satisfy each of the requirements in the regulatory evaluation and (2) provide a clear link to the conclusions reached by the NRC staff, as documented in the conclusion section.]

Conclusion

The NRC staff has reviewed the licensee's evaluations of the effects of the proposed EPU on the qualification of mechanical and electrical equipment and concludes that the licensee has (1) adequately addressed the effects of the proposed EPU on this equipment and (2) demonstrated that the equipment will continue to meet the requirements of draft GDC-1, 2, 9, 33, 34, 40, and 42; 10 CFR Part 100, Appendix A; and 10 CFR Part 50, Appendix B, following implementation of the proposed EPU. Therefore, the NRC staff finds the proposed EPU acceptable with respect to the qualification of the mechanical and electrical equipment.

[2.2.6 Additional Review Areas (Mechanical and Civil Engineering)]

[Insert Regulatory Evaluation, Technical Evaluation, and Conclusion sections as necessary]

INSERT 3

FOR

SECTION 3.2 - BWR TEMPLATE SAFETY EVALUATION

2.3 Electrical Engineering

2.3.1 Environmental Qualification of Electrical Equipment

Regulatory Evaluation

Environmental qualification (EQ) of electrical equipment involves demonstrating that the equipment is capable of performing its safety function under significant environmental stresses which could result from DBAs. The NRC staff's review focused on the effects of the proposed EPU on the environmental conditions that the electrical equipment will be exposed to during normal operation, anticipated operational occurrences, and accidents. The NRC staff's review was conducted to ensure that the electrical equipment will continue to be capable of performing its safety functions following implementation of the proposed EPU. The NRC's acceptance criteria for EQ of electrical equipment are based on 10 CFR 50.49, which sets forth requirements for the qualification of electrical equipment important to safety that is located in a harsh environment. Specific review criteria are contained in SRP Section 3.11.

Technical Evaluation

[Insert technical evaluation. The technical evaluation should (1) clearly explain why the proposed changes satisfy each of the requirements in the regulatory evaluation and (2) provide a clear link to the conclusions reached by the NRC staff, as documented in the conclusion section.]

Conclusion

The NRC staff has reviewed the licensee's assessment of the effects of the proposed EPU on the EQ of electrical equipment and concludes that the licensee has adequately addressed the effects of the proposed EPU on the environmental conditions for and the qualification of electrical equipment. The NRC staff further concludes that the electrical equipment will continue to meet the relevant requirements of 10 CFR 50.49 following implementation of the proposed EPU. Therefore, the NRC staff finds the proposed EPU acceptable with respect to the EQ of electrical equipment.

2.3.2 Offsite Power System

Regulatory Evaluation

The offsite power system includes two or more physically independent circuits capable of operating independently of the onsite standby power sources. The NRC staff's review covered the descriptive information, analyses, and referenced documents for the offsite power system; and the stability studies for the electrical transmission grid. The NRC staff's review focused on whether the loss of the nuclear unit, the largest operating unit on the grid, or the most critical transmission line will result in the loss of offsite power (LOOP) to the plant following implementation of the proposed EPU. The NRC's acceptance criteria for offsite power systems are based on draft GDC-39. Specific review criteria are contained in SRP Sections 8.1 and 8.2, Appendix A to SRP Section 8.2, and Branch Technical Positions (BTPs) PSB-1 and ICSB-11.

Technical Evaluation

[Insert technical evaluation. The technical evaluation should (1) clearly explain why the proposed changes satisfy each of the requirements in the regulatory evaluation and (2) provide a clear link to the conclusions reached by the NRC staff, as documented in the conclusion section.]

Conclusion

The NRC staff has reviewed the licensee's assessment of the effects of the proposed EPU on the offsite power system and concludes that the offsite power system will continue to meet the requirements of draft GDC-39 following implementation of the proposed EPU. Adequate physical and electrical separation exists and the offsite power system has the capacity and capability to supply power to all safety loads and other required equipment. The NRC staff further concludes that the impact of the proposed EPU on grid stability is insignificant. Therefore, the NRC staff finds the proposed EPU acceptable with respect to the offsite power system.

2.3.3 AC Onsite Power System

Regulatory Evaluation

The alternating current (ac) onsite power system includes those standby power sources, distribution systems, and auxiliary supporting systems provided to supply power to safety-related equipment. The NRC staff's review covered the descriptive information, analyses, and referenced documents for the ac onsite power system. The NRC's acceptance criteria for the ac onsite power system are based on draft GDC-24 and 39, insofar as they require the system to have the capacity and capability to perform its intended functions during anticipated operational occurrences and accident conditions. Specific review criteria are contained in SRP Sections 8.1 and 8.3.1.

Technical Evaluation

[Insert technical evaluation. The technical evaluation should (1) clearly explain why the proposed changes satisfy each of the requirements in the regulatory evaluation and (2) provide a clear link to the conclusions reached by the NRC staff, as documented in the conclusion section.]

Conclusion

The NRC staff has reviewed the licensee's assessment of the effects of the proposed EPU on the ac onsite power system and concludes that the licensee has adequately accounted for the effects of the proposed EPU on the system's functional design. The NRC staff further concludes that the ac onsite power system will continue to meet the requirements of draft GDC-24 and 39 following implementation of the proposed EPU. Therefore, the NRC staff finds the proposed EPU acceptable with respect to the ac onsite power system.

2.3.4 DC Onsite Power System

Regulatory Evaluation

The direct current (dc) onsite power system includes the dc power sources and their distribution and auxiliary supporting systems that are provided to supply motive or control power to safety-related equipment. The NRC staff's review covered the information, analyses, and referenced documents for the dc onsite power system. The NRC's acceptance criteria for the dc onsite power system are based on draft GDC-24 and 39, insofar as they require the system to have the capacity and capability to perform its intended functions during anticipated operational occurrences and accident conditions. Specific review criteria are contained in SRP Sections 8.1 and 8.3.2

Technical Evaluation

[Insert technical evaluation. The technical evaluation should (1) clearly explain why the proposed changes satisfy each of the requirements in the regulatory evaluation and (2) provide a clear link to the conclusions reached by the NRC staff, as documented in the conclusion section.]

Conclusion

The NRC staff has reviewed the licensee's assessment of the effects of the proposed EPU on the dc onsite power system and concludes that the licensee has adequately accounted for the effects of the proposed EPU on the system's functional design. The NRC staff further concludes that the dc onsite power system will continue to meet the requirements of draft GDC-24 and 39 following implementation of the proposed EPU. Adequate physical and electrical separation exists and the system has the capacity and capability to supply power to all safety loads and other required equipment. Therefore, the NRC staff finds the proposed EPU acceptable with respect to the dc onsite power system.

2.3.5 Station Blackout

Regulatory Evaluation

Station blackout (SBO) refers to a complete loss of ac electric power to the essential and nonessential switchgear buses in a nuclear power plant. SBO involves the LOOP concurrent with a turbine trip and failure of the onsite emergency ac power system. SBO does not include the loss of available ac power to buses fed by station batteries through inverters or the loss of power from "alternate ac sources" (AACs). The NRC staff's review focused on the impact of the proposed EPU on the plant's ability to cope with and recover from an SBO event for the period of time established in the plant's licensing basis. The NRC's acceptance criteria for SBO are based on 10 CFR 50.63. Specific review criteria are contained in SRP Sections 8.1 and Appendix B to SRP Section 8.2; and other guidance provided in Matrix 3 of RS-001.

Technical Evaluation

[Insert technical evaluation. The technical evaluation should (1) clearly explain why the proposed changes satisfy each of the requirements in the regulatory evaluation and (2) provide a clear link to the conclusions reached by the NRC staff, as documented in the conclusion section.]

Conclusion

The NRC staff has reviewed the licensee's assessment of the effects of the proposed EPU on the plant's ability to cope with and recover from an SBO event for the period of time established in the plant's licensing basis. The NRC staff concludes that the licensee has adequately evaluated the effects of the proposed EPU on SBO and demonstrated that the plant will continue to meet the requirements of 10 CFR 50.63 following implementation of the proposed EPU. Therefore, the NRC staff finds the proposed EPU acceptable with respect to SBO.

[2.3.6 Additional Review Areas (Electrical Engineering)]

[Insert Regulatory Evaluation, Technical Evaluation, and Conclusion sections as necessary]

INSERT 4

FOR

SECTION 3.2 - BWR TEMPLATE SAFETY EVALUATION

2.4 Instrumentation and Controls

2.4.1 Reactor Protection, Safety Features Actuation, and Control Systems

Regulatory Evaluation

Instrumentation and control systems are provided (1) to control plant processes having a significant impact on plant safety, (2) to initiate the reactivity control system (including control rods), (3) to initiate the engineered safety features (ESF) systems and essential auxiliary supporting systems, and (4) for use to achieve and maintain a safe shutdown condition of the plant. Diverse instrumentation and control systems and equipment are provided for the express purpose of protecting against potential common-mode failures of instrumentation and control protection systems. The NRC staff conducted a review of the reactor trip system, engineered safety feature actuation system (ESFAS), safe shutdown systems, control systems, and diverse instrumentation and control systems for the proposed EPU to ensure that the systems and any changes necessary for the proposed EPU are adequately designed such that the systems continue to meet their safety functions. The NRC staff's review was also conducted to ensure that failures of the systems do not affect safety functions. The NRC's acceptance criteria related to the quality of design of protection and control systems are based on 10 CFR 50.55a(a)(1), 10 CFR 50.55a(h), and draft GDC-1, 11, 12, 14, 15, 19, 20, 22, 23, 25, 26, 40, and 42. Specific review criteria are contained in SRP Sections 7.0, 7.2, 7.3, 7.4, 7.7, and 7.8.

Technical Evaluation

[Insert technical evaluation. The technical evaluation should (1) clearly explain why the proposed changes satisfy each of the requirements in the regulatory evaluation and (2) provide a clear link to the conclusions reached by the NRC staff, as documented in the conclusion section.]

Conclusion

The NRC staff has reviewed the licensee's application related to the effects of the proposed EPU on the functional design of the reactor trip system, ESFAS, safe shutdown system, and control systems. The NRC staff concludes that the licensee has adequately addressed the effects of the proposed EPU on these systems and that the changes that are necessary to achieve the proposed EPU are consistent with the plant's design basis. The NRC staff further concludes that the systems will continue to meet the requirements of 10 CFR 50.55a(a)(1), 10 CFR 50.55(a)(h), and draft GDC-1, 11, 12, 14, 15, 19, 20, 22, 23, 25, 26, 40, and 42. Therefore, the NRC staff finds the licensee's proposed EPU acceptable with respect to instrumentation and controls.

[2.4.2 Additional Review Areas (Instrumentation and Controls)]

[Insert Regulatory Evaluation, Technical Evaluation, and Conclusion sections as necessary]

INSERT 5

FOR

SECTION 3.2 - BWR TEMPLATE SAFETY EVALUATION

2.5 Plant Systems

2.5.1 Internal Hazards

2.5.1.1 Flooding

2.5.1.1.1 Flood Protection

Regulatory Evaluation

The NRC staff conducted a review in the area of flood protection to ensure that SSCs important to safety are protected from flooding. The NRC staff's review covered flooding of SSCs important to safety from internal sources, such as those caused by failures of tanks and vessels. The NRC staff's review focused on increases of fluid volumes in tanks and vessels assumed in flooding analyses to assess the impact of any additional fluid on the flooding protection that is provided. The NRC's acceptance criteria for flood protection are based on draft GDC-2. Specific review criteria are contained in SRP Section 3.4.1.

Technical Evaluation

[Insert technical evaluation. The technical evaluation should (1) clearly explain why the proposed changes satisfy each of the requirements in the regulatory evaluation and (2) provide a clear link to the conclusions reached by the NRC staff, as documented in the conclusion section.]

Conclusion

The NRC staff has reviewed the proposed changes in fluid volumes in tanks and vessels for the proposed EPU. The NRC staff concludes that SSCs important to safety will continue to be protected from flooding and will continue to meet the requirements of draft GDC-2 following implementation of the proposed EPU. Therefore, the NRC staff finds the proposed EPU acceptable with respect to flood protection.

2.5.1.1.2 Equipment and Floor Drains

Regulatory Evaluation

The function of the equipment and floor drainage system (EFDS) is to assure that waste liquids, valve and pump leakoffs, and tank drains are directed to the proper area for processing or disposal. The EFDS is designed to handle the volume of leakage expected, prevent a backflow of water that might result from maximum flood levels to areas of the plant containing safety-related equipment, and protect against the potential for inadvertent transfer of contaminated fluids to an uncontaminated drainage system. The NRC staff's review of the EFDS included the collection and disposal of liquid effluents outside containment.
The NRC staff's review focused on any changes in fluid volumes or pump capacities that are necessary for the proposed EPU and are not consistent with previous assumptions with respect to floor drainage considerations. The NRC's acceptance criteria for the EFDS are based on draft GDC-2 insofar as it requires the EFDS to be designed to withstand the effects of earthquakes and to be compatible with the environmental conditions (flooding) associated with normal operation, maintenance, testing, and postulated accidents (pipe failures and tank ruptures). Specific review criteria are contained in SRP Section 9.3.3.

Technical Evaluation

[Insert technical evaluation. The technical evaluation should (1) clearly explain why the proposed changes satisfy each of the requirements in the regulatory evaluation and (2) provide a clear link to the conclusions reached by the NRC staff, as documented in the conclusion section.]

Conclusion

The NRC staff has reviewed the licensee's assessment of the effects of the proposed EPU on the EFDS and concludes that the licensee has adequately accounted for the plant changes resulting in increased water volumes and larger capacity pumps or piping systems. The NRC staff concludes that the EFDS has sufficient capacity to (1) handle the additional expected leakage resulting from the plant changes, (2) prevent the backflow of water to areas with safety-related equipment, and (3) ensure that contaminated fluids are not transferred to noncontaminated drainage systems. Based on this, the NRC staff concludes that the EFDS will continue to meet the requirements of draft GDC-2 following implementation of the proposed EPU. Therefore, the NRC staff finds the proposed EPU acceptable with respect to the EFDS.

2.5.1.1.3 Circulating Water System

Regulatory Evaluation

The circulating water system (CWS) provides a continuous supply of cooling water to the main condenser to remove the heat rejected by the turbine cycle and auxiliary systems. The NRC staff's review of the CWS focused on changes in flooding analyses that are necessary due to increases in fluid volumes or installation of larger capacity pumps or piping needed to accommodate the proposed EPU. The NRC's acceptance criteria for the CWS are based on draft GDC-40 for the effects of flooding of safety-related areas due to leakage from the CWS and the effects of malfunction or failure of a component or piping of the CWS on the functional performance capabilities of safety-related SSCs. Specific review criteria are contained in SRP Section 10.4.5.

Technical Evaluation

[Insert technical evaluation. The technical evaluation should (1) clearly explain why the proposed changes satisfy each of the requirements in the regulatory evaluation and (2) provide a clear link to the conclusions reached by the NRC staff, as documented in the conclusion section.]

Conclusion

The NRC staff has reviewed the licensee's assessment of the modifications to the CWS and concludes that the licensee has adequately evaluated these modifications. The NRC staff concludes that, consistent with the requirements of draft GDC-40, the increased volumes of fluid leakage that could potentially result from these modifications would not result in the failure of safety-related SSCs following implementation of the proposed EPU. Therefore, the NRC staff finds the proposed EPU acceptable with respect to the CWS.

2.5.1.2 Missile Protection

2.5.1.2.1. Internally Generated Missiles

Regulatory Evaluation

The NRC staff's review concerns missiles that could result from in-plant component overspeed failures and high-pressure system ruptures. The NRC staff's review of potential missile sources covered pressurized components and systems, and high-speed rotating machinery. The NRC staff's review was conducted to ensure that safety-related SSCs are adequately protected from internally generated missiles. In addition, for cases where safety-related SSCs are located in areas containing non-safety-related SSCs, the NRC staff reviewed the non-safety-related SSCs to ensure that their failure will not preclude the intended safety function of the safety-related SSCs. The NRC staff's review focused on any increases in system pressures or component overspeed conditions that could result during plant operation, anticipated operational occurrences, or changes in existing system configurations such that missile barrier considerations could be affected. The NRC's acceptance criteria for the protection of SSCs important to safety against the effects of internally generated missiles that may result from equipment failures are based on draft GDC-40. Specific review criteria are contained in SRP Sections 3.5.1.1 and 3.5.1.2.

Technical Evaluation

[Insert technical evaluation. The technical evaluation should (1) clearly explain why the proposed changes satisfy each of the requirements in the regulatory evaluation and (2) provide a clear link to the conclusions reached by the NRC staff, as documented in the conclusion section.]

Conclusion

The NRC staff has reviewed the changes in system pressures and configurations that are required for the proposed EPU and concludes that SSCs important to safety will continue to be protected from internally generated missiles and will continue to meet the requirements of draft GDC-40 following implementation of the proposed EPU. Therefore, the NRC staff finds the proposed EPU acceptable with respect to internally generated missiles.

2.5.1.2.2 Turbine Generator

Regulatory Evaluation

The turbine control system, steam inlet stop and control valves, low pressure turbine steam intercept and inlet control valves, and extraction steam control valves control the speed of the turbine under normal and abnormal conditions, and are thus related to the overall safe operation of the plant. The NRC staff's review of the turbine generator focused on the effects of the proposed EPU on the turbine overspeed protection features to ensure that a turbine overspeed condition above the design overspeed is very unlikely. The NRC's acceptance criteria for the turbine generator are based on draft GDC-40, and relates to protection of ESFs from the effects of turbine missiles by providing a turbine overspeed protection system (with suitable redundancy) to minimize the probability of generating turbine missiles. Specific review criteria are contained in SRP Section 10.2.

Technical Evaluation

[Insert technical evaluation. The technical evaluation should (1) clearly explain why the proposed changes satisfy each of the requirements in the regulatory evaluation and (2) provide a clear link to the conclusions reached by the NRC staff, as documented in the conclusion section.]

Conclusion

The NRC staff has reviewed the licensee's assessment of the effects of the proposed EPU on the turbine generator and concludes that the licensee has adequately accounted for the effects of changes in plant conditions on turbine overspeed. The NRC staff concludes that the turbine generator will continue to provide adequate turbine overspeed protection to minimize the probability of generating turbine missiles and will continue to meet the requirements of draft GDC-40 following implementation of the proposed EPU. Therefore, the NRC staff finds the proposed EPU acceptable with respect to the turbine generator.

2.5.1.3 Pipe Failures

Regulatory Evaluation

The NRC staff conducted a review of the plant design for protection from piping failures outside containment to ensure that (1) such failures would not cause the loss of needed functions of safety-related systems and (2) the plant could be safely shut down in the event of such failures. The NRC staff's review of pipe failures included high and moderate energy fluid system piping located outside of containment. The NRC staff's review focused on the effects of pipe failures on plant environmental conditions, control room habitability, and access to areas important to safe control of postaccident operations where the consequences are not bounded by previous analyses. The NRC's acceptance criteria for pipe failures are based on draft GDC-40 and 42, insofar that they require that ESFs be designed to accommodate the dynamic effects of postulated pipe ruptures, as well as the effects of a loss of coolant accident. Specific review criteria are contained in SRP Section 3.6.1.

Technical Evaluation

[Insert technical evaluation. The technical evaluation should (1) clearly explain why the proposed changes satisfy each of the requirements in the regulatory evaluation and (2) provide a clear link to the conclusions reached by the NRC staff, as documented in the conclusion section.]

Conclusion

The NRC staff has reviewed the changes that are necessary for the proposed EPU and the licensee's proposed operation of the plant, and concludes that SSCs important to safety will continue to be protected from the dynamic effects of postulated piping failures in fluid systems outside containment and will continue to meet the requirements of draft GDC-40 and 42 following implementation of the proposed EPU. Therefore, the NRC staff finds the proposed EPU acceptable with respect to protection against postulated piping failures in fluid systems outside containment.

2.5.1.4 Fire Protection

Regulatory Evaluation

The purpose of the fire protection program (FPP) is to provide assurance, through a defense-in-depth design, that a fire will not prevent the performance of necessary safe plant shutdown functions and will not significantly increase the risk of radioactive releases to the environment. The NRC staff's review focused on the effects of the increased decay heat on the plant's safe shutdown analysis to ensure that SSCs required for the safe shutdown of the plant are protected from the effects of the fire and will continue to be able to achieve and maintain safe shutdown following a fire. The NRC's acceptance criteria for the FPP are based on (1) 10 CFR 50.48 and associated Appendix R to 10 CFR Part 50, insofar as they require the development of an FPP to ensure, among other things, the capability to safely shut down the plant; and (2) draft GDC-3, insofar as it requires that the reactor facility be designed (a) to minimize the probability of events, such as fire and explosions, and (b) to minimize the potential effects of such events to safety. Specific review criteria are contained in SRP Section 9.5.1, as supplemented by the guidance provided in Attachment 2 to Matrix 5 of Section 2.1 of RS-001.

Technical Evaluation

[Insert technical evaluation. The technical evaluation should (1) clearly explain why the proposed changes satisfy each of the requirements in the regulatory evaluation and (2) provide a clear link to the conclusions reached by the NRC staff, as documented in the conclusion section.]

Conclusion

The NRC staff has reviewed the licensee's fire-related safe shutdown assessment and concludes that the licensee has adequately accounted for the effects of the increased decay heat on the ability of the required systems to achieve and maintain safe shutdown conditions. The NRC staff further concludes that the FPP will continue to meet the requirements of 10 CFR 50.48, Appendix R to 10 CFR Part 50, and draft GDC-3 following implementation of the proposed EPU. Therefore, the NRC staff finds the proposed EPU acceptable with respect to fire protection.

2.5.2 Fission Product Control

2.5.2.1 Fission Product Control Systems and Structures

Regulatory Evaluation

The NRC staff's review for fission product control systems and structures covered the basis for developing the mathematical model for DBLOCA dose computations, the values of key parameters, the applicability of important modeling assumptions, and the functional capability of ventilation systems used to control fission product releases. The NRC staff's review primarily focused on any adverse effects that the proposed EPU may have on the assumptions used in the analyses for control of fission products. The NRC's acceptance criteria are based on draft GDC-70, insofar as it requires that the facility design include those means necessary to maintain radioactivity control on the basis of 10CFR50.67 dose guidelines for potential reactor accidents. Specific review criteria are contained in SRP Section 6.5.3.

Technical Evaluation

[Insert technical evaluation. The technical evaluation should (1) clearly explain why the proposed changes satisfy each of the requirements in the regulatory evaluation and (2) provide a clear link to the conclusions reached by the NRC staff, as documented in the conclusion section.]

Conclusion

The NRC staff has reviewed the licensee's assessment of the effects of the proposed EPU on fission product control systems and structures. The NRC staff concludes that the licensee has adequately accounted for the increase in fission products and changes in expected environmental conditions that would result from the proposed EPU. The NRC staff further concludes that the fission product control systems and structures will continue to provide adequate fission product removal in postaccident environments following implementation of the proposed EPU. Based on this, the NRC staff also concludes that the fission product control systems and structures will continue to meet the requirements of draft GDC-70. Therefore, the NRC staff finds the proposed EPU acceptable with respect to the fission product control systems and structures.

2.5.2.2 Main Condenser Evacuation System

Regulatory Evaluation

The main condenser evacuation system (MCES) generally consists of two subsystems: (1) the "hogging" or startup system which initially establishes main condenser vacuum and (2) the system which maintains condenser vacuum once it has been established. The NRC staff's review focused on modifications to the system that may affect gaseous radioactive material handling and release assumptions, and design features to preclude the possibility of an explosion (if the potential for explosive mixtures exists). The NRC's acceptance criteria for the MCES are based on (1) draft GDC-70, insofar as it requires that the plant design include means to control the release of radioactive effluents; and (2) draft GDC-17, insofar as it requires that means be provided for monitoring effluent discharge paths and the plant environs for radioactivity that may be released from normal operations, including anticipated operational occurrences and postulated accidents. Specific review criteria are contained in SRP Section 10.4.2.

Technical Evaluation

[Insert technical evaluation. The technical evaluation should (1) clearly explain why the proposed changes satisfy each of the requirements in the regulatory evaluation and (2) provide a clear link to the conclusions reached by the NRC staff, as documented in the conclusion section.]

Conclusion

The NRC staff has reviewed the licensee's assessment of required changes to the MCES and concludes that the licensee has adequately evaluated these changes. The NRC staff concludes that the MCES will continue to maintain its ability to control and provide monitoring for releases of radioactive materials to the environment following implementation of the proposed EPU. The NRC also concludes that the MCES will continue meet the requirements of draft GDC-17 and 70. Therefore, the NRC staff finds the proposed EPU acceptable with respect to the MCES.

2.5.2.3 Turbine Gland Sealing System

Regulatory Evaluation

The turbine gland sealing system is provided to control the release of radioactive material from steam in the turbine to the environment. The NRC staff reviewed changes to the turbine gland sealing system with respect to factors that may affect gaseous radioactive material handling (e.g., source of sealing steam, system interfaces, and potential leakage paths). The NRC's acceptance criteria for the turbine gland sealing system are based on (1) draft GDC-70, insofar as it requires that the plant design include means to control the release of radioactive effluents; and (2) draft GDC-17, insofar as it requires that means be provided for monitoring effluent discharge paths and the plant environs for radioactivity that may be released from normal operations, including anticipated operational occurrences and postulated accidents. Specific review criteria are contained in SRP Section 10.4.3.

Technical Evaluation

[Insert technical evaluation. The technical evaluation should (1) clearly explain why the proposed changes satisfy each of the requirements in the regulatory evaluation and (2) provide a clear link to the conclusions reached by the NRC staff, as documented in the conclusion section.]

Conclusion

The NRC staff has reviewed the licensee's assessment of required changes to the turbine gland sealing system and concludes that the licensee has adequately evaluated these changes. The NRC staff concludes that the turbine gland sealing system will continue to maintain its ability to control and provide monitoring for releases of radioactive materials to the environment consistent with draft GDC-17 and 70. Therefore, the NRC staff finds the proposed EPU acceptable with respect to the turbine gland sealing system.

2.5.2.4 Main Steam Isolation Valve Leakage Control System

[Not applicable. VYNPS does not have a MSIV leakage control system.]

Regulatory Evaluation

Technical Evaluation

Conclusion

2.5.3 Component Cooling and Decay Heat Removal

2.5.3.1 Spent Fuel Pool Cooling and Cleanup System

Regulatory Evaluation

The spent fuel pool provides wet storage of spent fuel assemblies. The safety function of the spent fuel pool cooling and cleanup system is to cool the spent fuel assemblies and keep the spent fuel assemblies covered with water during all storage conditions. The NRC staff's review for the proposed EPU focused on the effects of the proposed EPU on the capability of the system to provide adequate cooling to the spent fuel during all operating and accident conditions. The NRC's acceptance criteria for the spent fuel pool cooling and cleanup system are based on (1) draft GDC-67, insofar as it requires that reliable decay heat removal systems be designed to prevent damage to the fuel in storage. Specific review criteria are contained in SRP Section 9.1.3, as supplemented by the guidance provided in Attachment 1 to Matrix 5 of Section 2.1 of RS-001.

Technical Evaluation

[Insert technical evaluation. The technical evaluation should (1) clearly explain why the proposed changes satisfy each of the requirements in the regulatory evaluation and (2) provide a clear link to the conclusions reached by the NRC staff, as documented in the conclusion section.]

Conclusion

The NRC staff has reviewed the licensee's assessment related to the spent fuel pool cooling and cleanup system and concludes that the licensee has adequately accounted for the effects of the proposed EPU on the spent fuel pool cooling function of the system. Based on this review, the NRC staff concludes that the spent fuel pool cooling and cleanup system will continue to provide sufficient cooling capability to cool the spent fuel pool following implementation of the proposed EPU and will continue to meet the requirements of draft GDC-67. Therefore, the NRC staff finds the proposed EPU acceptable with respect to the spent fuel pool cooling and cleanup system.

2.5.3.2 Station Service Water System

Regulatory Evaluation

The station service water system (SWS) provides essential cooling to safety-related equipment and may also provide cooling to non-safety-related auxiliary components that are used for normal plant operation. The NRC staff's review covered the characteristics of the station SWS components with respect to their functional performance as affected by adverse operational (i.e., water hammer) conditions, abnormal operational conditions, and accident conditions (e.g., a LOCA with the LOOP). The NRC staff's review focused on the additional heat load that would result from the proposed EPU. The NRC's acceptance criteria are based on draft GDC-40 and 42, insofar as they require that protection be provided for ESFs against the dynamic effects that might result from plant equipment failures, as well as the effects of a loss of coolant accident. Specific review criteria are contained in SRP Section 9.2.1, as supplemented by GL 89-13 and GL 96-06.

Technical Evaluation

[Insert technical evaluation. The technical evaluation should (1) clearly explain why the proposed changes satisfy each of the requirements in the regulatory evaluation and (2) provide a clear link to the conclusions reached by the NRC staff, as documented in the conclusion section.]

Conclusion

The NRC staff has reviewed the licensee's assessment related to the effects of the proposed EPU on the station SWS and concludes that the licensee has adequately accounted for the increased heat loads on system performance that would result from the proposed EPU. The NRC staff concludes that the station SWS will continue to be protected from the dynamic effects associated with flow instabilities and provide sufficient cooling for SSCs important to safety following implementation of the proposed EPU. Therefore, the NRC staff has determined that the station SWS will continue to meet the requirements of draft GDC-40 and 42. Based on the above, the NRC staff finds the proposed EPU acceptable with respect to the station SWS.

2.5.3.3 Reactor Auxiliary Cooling Water Systems

Regulatory Evaluation

The NRC staff's review covered reactor auxiliary cooling water systems that are required for (1) safe shutdown during normal operations, anticipated operational occurrences, and mitigating the consequences of accident conditions, or (2) preventing the occurrence of an accident. These systems include closed-loop auxiliary cooling water systems for reactor system components, reactor shutdown equipment, ventilation equipment, and components of the ECCS. The NRC staff's review covered the capability of the auxiliary cooling water systems to provide adequate cooling water to safety-related ECCS components and reactor auxiliary equipment for all planned operating conditions. Emphasis was placed on the cooling water systems for safety-related components (e.g., ECCS equipment, ventilation equipment, and reactor shutdown equipment). The NRC staff's review focused on the additional heat load that would result from the proposed EPU. The NRC's acceptance criteria for the reactor auxiliary cooling water system are based on draft GDC-40 and 42, insofar as they require that protection be provided for ESFs against the dynamic effects that might result from plant equipment failures, as well as the effects of a loss of coolant accident. Specific review criteria are contained in SRP Section 9.2.2, as supplemented by GL 89-13 and GL 96-06.

Technical Evaluation

[Insert technical evaluation. The technical evaluation should (1) clearly explain why the proposed changes satisfy each of the requirements in the regulatory evaluation and (2) provide a clear link to the conclusions reached by the NRC staff, as documented in the conclusion section.]

Conclusion

The NRC staff has reviewed the licensee's assessment of the effects of the proposed EPU on the reactor auxiliary cooling water systems and concludes that the licensee has adequately accounted for the increased heat loads from the proposed EPU on system performance. The NRC staff concludes that the reactor auxiliary cooling water systems will continue to be protected from the dynamic effects associated with flow instabilities and provide sufficient cooling for SSCs important to safety following implementation of the proposed EPU. Therefore, the NRC staff has determined that the reactor auxiliary cooling water systems will continue to meet the requirements of draft GDC-40 and 42. Based on the above, the NRC staff finds the proposed EPU acceptable with respect to the reactor auxiliary cooling water systems.

2.5.3.4 Ultimate Heat Sink

Regulatory Evaluation

The ultimate heat sink (UHS) is the source of cooling water provided to dissipate reactor decay heat and essential cooling system heat loads after a normal reactor shutdown or a shutdown following an accident. The NRC staff's review focused on the impact that the proposed EPU has on the decay heat removal capability of the UHS. Additionally, the NRC staff's review included evaluation of the design-basis UHS temperature limit determination to confirm that post-licensing data trends (e.g., air and water temperatures, humidity, wind speed, water volume) do not establish more severe conditions than previously assumed. Specific review criteria are contained in SRP Section 9.2.5.

Technical Evaluation

[Insert technical evaluation. The technical evaluation should (1) clearly explain why the proposed changes satisfy each of the requirements in the regulatory evaluation and (2) provide a clear link to the conclusions reached by the NRC staff, as documented in the conclusion section.]

Conclusion

The NRC staff has reviewed the information that was provided by the licensee for addressing the effects that the proposed EPU would have on the UHS safety function, including the licensee's validation of the design-basis UHS temperature limit based on post-licensing data. Based on the information that was provided, the NRC staff concludes that the proposed EPU will not compromise the design-basis safety function of the UHS, and that the UHS will continue to satisfy applicable safety requirements following implementation of the proposed EPU. Therefore, the NRC staff finds the proposed EPU acceptable with respect to the UHS.

2.5.4 Balance-of-Plant Systems

2.5.4.1. Main Steam

Regulatory Evaluation

The main steam supply system (MSSS) transports steam from the NSSS to the power conversion system and various safety-related and non-safety-related auxiliaries. The NRC staff's review focused on the effects of the proposed EPU on the system's capability to transport steam to the power conversion system, provide heat sink capacity, supply steam to drive safety system pumps, and withstand adverse dynamic loads (e.g., water steam hammer resulting from rapid valve closure and relief valve fluid discharge loads). The NRC's acceptance criteria for the MSSS are based on draft GDC-40 and 42, insofar as they require that protection be provided for ESFs against the dynamic effects and missiles that might result from plant equipment failures, as well as the effects of a loss of coolant accident. Specific review criteria are contained in SRP Section 10.3.

Technical Evaluation

[Insert technical evaluation. The technical evaluation should (1) clearly explain why the proposed changes satisfy each of the requirements in the regulatory evaluation and (2) provide a clear link to the conclusions reached by the NRC staff, as documented in the conclusion section.]

Conclusion

The NRC staff has reviewed the licensee's assessment of the effects of the proposed EPU on the MSSS and concludes that the licensee has adequately accounted for the effects of changes in plant conditions on the design of the MSSS. The NRC staff concludes that the MSSS will maintain its ability to transport steam to the power conversion system, provide heat sink capacity, supply steam to steam-driven safety pumps, and withstand steam hammer. The NRC staff further concludes that the MSSS will continue to meet the requirements of draft GDC-40 and 42. Therefore, the NRC staff finds the proposed EPU acceptable with respect to the MSSS.

2.5.4.2 Main Condenser

Regulatory Evaluation

The main condenser (MC) system is designed to condense and deaerate the exhaust steam from the main turbine and provide a heat sink for the turbine bypass system (TBS). For BWRs without an MSIV leakage control system, the MC system may also serve an accident mitigation function to act as a holdup volume for the plateout of fission products leaking through the MSIVs following core damage. The NRC staff's review focused on the effects of the proposed EPU on the steam bypass capability with respect to load rejection assumptions, and on the ability of the MC system to withstand the blowdown effects of steam from the TBS. The NRC's acceptance criteria for the MC system are based on draft GDC-70, insofar as it requires that the plant design include means to control the release of radioactive effluents. Specific review criteria are contained in SRP Section 10.4.1.

Technical Evaluation

[Insert technical evaluation. The technical evaluation should (1) clearly explain why the proposed changes satisfy each of the requirements in the regulatory evaluation and (2) provide a clear link to the conclusions reached by the NRC staff, as documented in the conclusion section.]

Conclusion

The NRC staff has reviewed the licensee's assessment of the effects of the proposed EPU on the MC system and concludes that the licensee has adequately accounted for the effects of changes in plant conditions on the design of the MC system. The NRC staff concludes that the MC system will continue to maintain its ability to withstand the blowdown effects of the steam from the TBS and thereby continue to meet draft GDC-70 with respect to controlling releases of radioactive effluents. Therefore, the NRC staff finds the proposed EPU acceptable with respect to the MC system.

2.5.4.3 Turbine Bypass

Regulatory Evaluation

The TBS is designed to discharge a stated percentage of rated main steam flow directly to the MC system, bypassing the turbine. This steam bypass enables the plant to take step-load reductions up to the TBS capacity without the reactor or turbine tripping. The system is also used during startup and shutdown to control reactor pressure. For a BWR without an MSIV leakage control system, the TBS could also provide an accident mitigation function. A TBS, along with the MSSS and MC system, may be credited for mitigating the effects of MSIV leakage during a LOCA by the holdup and plateout of fission products. The NRC staff's review for the TBS focused on the effects that the proposed EPU have on load rejection capability, analysis of postulated system piping failures, and the consequences of inadvertent TBS operation. The NRC's acceptance criteria for the TBS are based on draft GDC-40 and 42, insofar as they require that protection be provided for ESFs against the dynamic effects that might result from plant equipment failures, as well as the effects of a loss of coolant accident. Specific review criteria are contained in SRP Section 10.4.4.

Technical Evaluation

[Insert technical evaluation. The technical evaluation should (1) clearly explain why the proposed changes satisfy each of the requirements in the regulatory evaluation and (2) provide a clear link to the conclusions reached by the NRC staff, as documented in the conclusion section.]

Conclusion

The NRC staff has reviewed the licensee's assessment of the effects of the proposed EPU on the TBS. The NRC staff concludes that the licensee has adequately accounted for the effects of changes in plant conditions on the design of the TBS. The NRC staff concludes that the TBS will continue to mitigate the effects of MSIV leakage during a LOCA and provide a means for shutting down the plant during normal operations. The NRC staff further concludes that TBS failures will not adversely affect essential SSCs. Based on this, the NRC staff concludes that the TBS will continue to meet draft GDC-40 and 42. Therefore, the NRC staff finds the proposed EPU acceptable with respect to the TBS.

2.5.4.4 Condensate and Feedwater

Regulatory Evaluation

The condensate and feedwater system (CFS) provides feedwater at a particular temperature, pressure, and flow rate to the reactor. The only part of the CFS classified as safety-related is the feedwater piping from the NSSS up to and including the outermost containment isolation valve. The NRC staff's review focused on how the proposed EPU affects previous analyses and considerations with respect to the capability of the CFS to supply adequate feedwater during plant operation and shutdown, and isolate components, subsystems, and piping in order to preserve the system's safety function. The NRC's acceptance criteria for the CFS are based on draft GDC-40 and 42, insofar as they require that protection be provided for ESFs against the dynamic effects that might result from plant equipment failures, as well as the effects of a loss of coolant accident. Specific review criteria are contained in SRP Section 10.4.7.

Technical Evaluation

[Insert technical evaluation. The technical evaluation should (1) clearly explain why the proposed changes satisfy each of the requirements in the regulatory evaluation and (2) provide a clear link to the conclusions reached by the NRC staff, as documented in the conclusion section.]

Conclusion

The NRC staff has reviewed the licensee's assessment of the effects of the proposed EPU on the CFS and concludes that the licensee has adequately accounted for the effects of changes in plant conditions on the design of the CFS. The NRC staff concludes that the CFS will continue to maintain its ability to satisfy feedwater requirements for normal operation and shutdown, withstand water hammer, maintain isolation capability in order to preserve the system safety function, and not cause failure of safety-related SSCs. The NRC staff further concludes that the CFS will continue to meet the requirements of draft GDC 40 and 42. Therefore, the NRC staff finds the proposed EPU acceptable with respect to the CFS.

2.5.5 Waste Management Systems

2.5.5.1 Gaseous Waste Management Systems

Regulatory Evaluation

The gaseous waste management systems involve the gaseous radwaste system, which deals with the management of radioactive gases collected in the offgas system or the waste gas storage and decay tanks. In addition, it involves the management of the condenser air removal system; the gland seal exhaust and the mechanical vacuum pump operation exhaust; and the building ventilation system exhausts. The NRC staff's review focused on the effects that the proposed EPU may have on (1) the design criteria of the gaseous waste management systems, (2) methods of treatment, (3) expected releases, (4) principal parameters used in calculating the releases of radioactive materials in gaseous effluents, and (5) design features for precluding the possibility of an explosion if the potential for explosive mixtures exists. The NRC's acceptance criteria for gaseous waste management systems are based on (1) 10 CFR 20.1302, insofar as it provides for demonstrating that annual average concentrations of radioactive materials released at the boundary of the unrestricted area do not exceed specified values; (2) draft GDC-3, insofar as it requires that the reactor facility shall be designed (1) to minimize the probability of events, such as fire and explosions and (2) to minimize the potential effects of such events to safety; (3) draft GDC-70, insofar as it requires that the plant design include means to control the release of radioactive effluents; (4) draft GDC-67, 68, and 69, insofar as they require that systems that contain radioactivity be designed with appropriate confinement; and (5) 10 CFR Part 50, Appendix I, Sections II.B, II.C, and II.D, which set numerical guides for design objectives and limiting conditions for operation to meet the "as low as is reasonably achievable" (ALARA) criterion. Specific review criteria are contained in SRP Section 11.3.

Technical Evaluation

[Insert technical evaluation. The technical evaluation should (1) clearly explain why the proposed changes satisfy each of the requirements in the regulatory evaluation and (2) provide a clear link to the conclusions reached by the NRC staff, as documented in the conclusion section.]

Conclusion

The NRC staff has reviewed the licensee's assessment related to the gaseous waste management systems. The NRC staff concludes that the licensee has adequately accounted for the effects of the increase in fission product and amount of gaseous waste on the abilities of the systems to control releases of radioactive materials and preclude the possibility of an explosion if the potential for explosive mixtures exists. The NRC staff finds that the gaseous waste management systems will continue to meet their design functions following implementation of the proposed EPU. The NRC staff further concludes that the licensee has demonstrated that the gaseous waste management systems will continue to meet the requirements of 10 CFR 20.1302; draft GDC-3, 67, 68, 69, and 70; and 10 CFR Part 50, Appendix I, Sections II.B, II.C, and II.D. Therefore, the NRC staff finds the proposed EPU acceptable with respect to the gaseous waste management systems.

2.5.5.2 Liquid Waste Management Systems

Regulatory Evaluation

The NRC staff's review for liquid waste management systems focused on the effects that the proposed EPU may have on previous analyses and considerations related to the liquid waste management systems' design, design objectives, design criteria, methods of treatment, expected releases, and principal parameters used in calculating the releases of radioactive materials in liquid effluents. The NRC's acceptance criteria for the liquid waste management systems are based on (1) 10 CFR 20.1302, insofar as it provides for demonstrating that annual average concentrations of radioactive materials released at the boundary of the unrestricted area do not exceed specified values; (2) draft GDC-70, insofar as it requires that the plant design include means to control the release of radioactive effluents; (3) draft GDC-67, 68, and 69, insofar as they require that systems that contain radioactivity be designed with appropriate confinement; and (4) 10 CFR Part 50, Appendix I, Sections II.A and II.D, which set numerical guides for dose design objectives and limiting conditions for operation to meet the ALARA criterion. Specific review criteria are contained in SRP Section 11.2.

Technical Evaluation

[Insert technical evaluation. The technical evaluation should (1) clearly explain why the proposed changes satisfy each of the requirements in the regulatory evaluation and (2) provide a clear link to the conclusions reached by the NRC staff, as documented in the conclusion section.]

Conclusion

The NRC staff has reviewed the licensee's assessment related to the liquid waste management systems. The NRC staff concludes that the licensee has adequately accounted for the effects of the increase in fission product and amount of liquid waste on the ability of the liquid waste management systems to control releases of radioactive materials. The NRC staff finds that the liquid waste management systems will continue to meet their design functions following implementation of the proposed EPU. The NRC staff further concludes that the licensee has demonstrated that the liquid waste management systems will continue to meet the requirements of 10 CFR 20.1302; draft GDC-67, 68, 69, and 70; and 10 CFR Part 50, Appendix I, Sections II.A and II.D. Therefore, the NRC staff finds the proposed EPU acceptable with respect to the liquid waste management systems.

2.5.5.3 Solid Waste Management Systems

Regulatory Evaluation

The NRC staff's review for the solid waste management systems (SWMS) focused on the effects that the proposed EPU may have on previous analyses and considerations related to the design objectives in terms of expected volumes of waste to be processed and handled, the wet and dry types of waste to be processed, the activity and expected radionuclide distribution contained in the waste, equipment design capacities, and the principal parameters employed in the design of the SWMS. The NRC's acceptance criteria for the SWMS are based on (1) 10 CFR 20.1302, insofar as it provides for demonstrating that annual average concentrations of radioactive materials released at the boundary of the unrestricted area do not exceed specified values; (2) draft GDC-70, insofar as it requires that the plant design include means to control the release of radioactive effluents; (3) draft GDC-18, insofar as it requires that systems be provided in waste handling areas to detect conditions that may result in excessive radiation levels, (4) draft GDC-17, insofar as it requires that means be provided for monitoring effluent discharge paths and the plant environs for radioactivity that may be released from normal operations, including AOOs, and postulated accidents; and (5) 10 CFR Part 71, which states requirements for radioactive material packaging. Specific review criteria are contained in SRP Section 11.4.

Technical Evaluation

[Insert technical evaluation. The technical evaluation should (1) clearly explain why the proposed changes satisfy each of the requirements in the regulatory evaluation and (2) provide a clear link to the conclusions reached by the NRC staff, as documented in the conclusion section.]

Conclusion

The NRC staff has reviewed the licensee's assessment related to the SWMS. The NRC staff concludes that the licensee has adequately accounted for the effects of the increase in fission product and amount of solid waste on the ability of the SWMS to process the waste. The NRC staff finds that the SWMS will continue to meet its design functions following implementation of the proposed EPU. The NRC staff further concludes that the licensee has demonstrated that the SWMS will continue to meet the requirements of 10 CFR 20.1302, draft GDC-17, 18, and 70, and 10 CFR Part 71. Therefore, the NRC staff finds the proposed EPU acceptable with respect to the SWMS.

2.5.6 Additional Considerations

2.5.6.1 Emergency Diesel Engine Fuel Oil Storage and Transfer System

Regulatory Evaluation

Nuclear power plants are required to have redundant onsite emergency power supplies of sufficient capacity to perform their safety functions (e.g., power diesel engine-driven generator sets), assuming a single failure. The NRC staff's review focused on increases in emergency diesel generator electrical demand and the resulting increase in the amount of fuel oil necessary for the system to perform its safety function. The NRC's acceptance criteria for the emergency diesel engine fuel oil storage and transfer system are based on (1) draft GDC-40 and 42, insofar as they require that protection be provided for ESFs against the dynamic effects, including missiles associated with pipe breaks, as well as the effects of a loss of coolant accident; and (2) draft GDC-39, insofar as it requires onsite power supplies to have sufficient independence and redundancy to perform their safety functions, assuming a single failure. Specific review criteria are contained in SRP Section 9.5.4.

Technical Evaluation

[Insert technical evaluation. The technical evaluation should (1) clearly explain why the proposed changes satisfy each of the requirements in the regulatory evaluation and (2) provide a clear link to the conclusions reached by the NRC staff, as documented in the conclusion section.]

Conclusion

The NRC staff has reviewed the licensee's assessment related to the amount of required fuel oil for the emergency diesel generators and concludes that the licensee has adequately accounted for the effects of the increased electrical demand on fuel oil consumption. The NRC staff concludes that the fuel oil storage and transfer system will continue to provide an adequate amount of fuel oil to allow the diesel generators to meet the onsite power requirements of draft GDC-39, 40, and 42. Therefore, the NRC staff finds the proposed EPU acceptable with respect to the fuel oil storage and transfer system.

2.5.6.2 Light Load Handling System (Related to Refueling)

Regulatory Evaluation

The light load handling system (LLHS) includes components and equipment used in handling new fuel at the receiving station and the loading of spent fuel into shipping casks. The NRC staff's review covered the avoidance of criticality accidents, radioactivity releases resulting from damage to irradiated fuel, and unacceptable personnel radiation exposures. The NRC staff's review focused on the effects of the new fuel on system performance and related analyses. The NRC's acceptance criteria for the LLHS are based on (1) draft GDC-67, 68, and 69, insofar as they require that systems that contain radioactivity be designed with appropriate confinement and with suitable shielding for radiation protection; and (2) draft GDC-66, insofar as it requires that criticality be prevented. Specific review criteria are contained in SRP Section 9.1.4.

Technical Evaluation

[Insert technical evaluation. The technical evaluation should (1) clearly explain why the proposed changes satisfy each of the requirements in the regulatory evaluation and (2) provide a clear link to the conclusions reached by the NRC staff, as documented in the conclusion section.]

Conclusion

The NRC staff has reviewed the licensee's assessment of the effects of the new fuel on the ability of the LLHS to avoid criticality accidents and concludes that the licensee has adequately incorporated the effects of the new fuel in the analyses. Based on this review, the NRC staff further concludes that the LLHS will continue to meet the requirements of draft GDC-66, 67, 68, and 69 for radioactivity releases and prevention of criticality accidents. Therefore, the NRC staff finds the proposed EPU acceptable with respect to the LLHS.

[2.5.7 Additional Review Areas (Plant Systems)]

[Insert Regulatory Evaluation, Technical Evaluation, and Conclusion sections as necessary]

INSERT 6

FOR

SECTION 3.2 - BWR TEMPLATE SAFETY EVALUATION

2.6 Containment Review Considerations

2.6.1 Primary Containment Functional Design

Regulatory Evaluation

The containment encloses the reactor system and is the final barrier against the release of significant amounts of radioactive fission products in the event of an accident. The NRC staff's review for the primary containment functional design covered (1) the temperature and pressure conditions in the drywell and wetwell due to a spectrum of postulated LOCAs, (2) the differential pressure across the operating deck for a spectrum of LOCAs (Mark II containments only), (3) suppression pool dynamic effects during a LOCA or following the actuation of one or more RCS safety/relief valves, (4) the consequences of a LOCA occurring within the containment (wetwell), (5) the capability of the containment to withstand the effects of steam bypassing the suppression pool, (6) the suppression pool temperature limit during RCS safety/relief valve operation, and (7) the analytical models used for containment analysis. The NRC's acceptance criteria for the primary containment functional design are based on (1) draft GDC-40 and 42, insofar as they require that protection be provided for ESFs against the dynamic effects that might result from plant equipment failures, as well as the effects of a loss of coolant accident; (2) draft GDC-10, insofar as it requires that reactor containment be designed to sustain the initial effects of gross equipment failures, such as a large coolant boundary break, without loss of required integrity and, together with other engineered safety features as may be necessary, to retain for as long as the situation requires the functional capability; (3) draft GDC-49, insofar as it requires that the containment and its associated heat removal systems be designed so that the containment structure can accommodate, without exceeding the design leakage rate the pressures and temperatures resulting from the largest credible energy release following a loss-of-coolant accident, including considerable margin for effects from metal-water or other chemical reactions that could occur as a consequence of failure of emergency core cooling systems; (4) draft GDC-12, insofar as it requires that instrumentation and controls be provided as required to monitor and maintain variables within prescribed operating ranges; and (5) draft GDC-17, insofar as it requires that means be provided to monitor the reactor containment atmosphere for radioactivity that may be released from normal operations and from postulated accidents. Specific review criteria are contained in SRP Section 6.2.1.1.C.

Technical Evaluation

[Insert technical evaluation. The technical evaluation should (1) clearly explain why the proposed changes satisfy each of the requirements in the regulatory evaluation and (2) provide a clear link to the conclusions reached by the NRC staff, as documented in the conclusion section.]

Conclusion

The NRC staff has reviewed the licensee's assessment of the containment temperature and pressure transient and concludes that the licensee has adequately accounted for the increase of mass and energy resulting from the proposed EPU. The NRC staff further concludes that containment systems will continue to provide sufficient pressure and temperature mitigation capability to ensure that containment integrity is maintained. The NRC staff also concludes that containment systems and instrumentation will continue to be adequate for monitoring

containment parameters and release of radioactivity during normal and accident conditions and the containment and associated systems will continue to meet the requirements of draft GDC-10, 12, 17, 40, 42, and 49 following implementation of the proposed EPU. Therefore, the NRC staff finds the proposed EPU acceptable with respect to primary containment functional design.

2.6.2 Subcompartment Analyses

Regulatory Evaluation

A subcompartment is defined as any fully or partially enclosed volume within the primary containment that houses high-energy piping and would limit the flow of fluid to the main containment volume in the event of a postulated pipe rupture within the volume. The NRC staff's review for subcompartment analyses covered the determination of the design differential pressure values for containment subcompartments. The NRC staff's review focused on the effects of the increase in mass and energy release into the containment due to operation at EPU conditions, and the resulting increase in pressurization. The NRC's acceptance criteria for subcompartment analyses are based on (1) draft GDC-40 and 42, insofar as they require that protection be provided for ESFs against the dynamic effects that might result from plant equipment failures, as well as the effects of a loss of coolant accident; and (2) draft GDC-49, insofar as it requires that the containment structure, including access openings and penetrations, and any necessary containment heat removal systems be designed so that the containment structure can accommodate without exceeding the design leakage rate the pressures and temperatures resulting from the largest credible energy release following a loss-of-coolant accident. Specific review criteria are contained in SRP Section 6.2.1.2.

Technical Evaluation

[Insert technical evaluation. The technical evaluation should (1) clearly explain why the proposed changes satisfy each of the requirements in the regulatory evaluation and (2) provide a clear link to the conclusions reached by the NRC staff, as documented in the conclusion section.]

Conclusion

The NRC staff has reviewed the subcompartment assessment performed by the licensee and the change in predicted pressurization resulting from the increased mass and energy release. The NRC staff concludes that containment SSCs important to safety will continue to be protected from the dynamic effects resulting from pipe breaks and that the subcompartments will continue to have sufficient margins to prevent fracture of the structure due to pressure difference across the walls following implementation of the proposed EPU. Based on this, the NRC staff concludes that the plant will continue to meet draft GDC-40, 42, and 49 for the proposed EPU. Therefore, the NRC staff finds the proposed EPU acceptable with respect to subcompartment analyses.

2.6.3 Mass and Energy Release

2.6.3.1 Mass and Energy Release Analysis for Postulated Loss of Coolant

Regulatory Evaluation

The release of high-energy fluid into containment from pipe breaks could challenge the structural integrity of the containment, including subcompartments and systems within the containment. The NRC staff's review covered the energy sources that are available for release to the containment and the mass and energy release rate calculations for the initial blowdown phase of the accident. The NRC's acceptance criteria for mass and energy release analyses for postulated LOCAs are based on (1) draft GDC-49, insofar as it requires that the containment structure be designed to accommodate, without exceeding the design leakage rate, the pressures and temperatures resulting from the largest credible energy release following a LOCA; and (2) 10 CFR Part 50, Appendix K, insofar as it identifies sources of energy during a LOCA. Specific review criteria are contained in SRP Section 6.2.1.3.

Technical Evaluation

[Insert technical evaluation. The technical evaluation should (1) clearly explain why the proposed changes satisfy each of the requirements in the regulatory evaluation and (2) provide a clear link to the conclusions reached by the NRC staff, as documented in the conclusion section.]

Conclusion

The NRC staff has reviewed the licensee's mass and energy release assessment and concludes that the licensee has adequately addressed the effects of the proposed EPU and appropriately accounts for the sources of energy identified in 10 CFR Part 50, Appendix K. Based on this, the NRC staff finds that the mass and energy release analysis meets the requirements in draft GDC-49 for ensuring that the analysis is conservative. Therefore, the NRC staff finds the proposed EPU acceptable with respect to mass and energy release for postulated LOCA.

2.6.4 Combustible Gas Control in Containment

Regulatory Evaluation

Following a LOCA, hydrogen and oxygen may accumulate inside the containment due to chemical reactions between the fuel rod cladding and steam, corrosion of aluminum and other materials, and radiolytic decomposition of water. If excessive hydrogen is generated, it may form a combustible mixture in the containment atmosphere. The NRC staff's review covered (1) the production and accumulation of combustible gases, (2) the capability to prevent high concentrations of combustible gases in local areas, (3) the capability to monitor combustible gas concentrations, and (4) the capability to reduce combustible gas concentrations. The NRC staff's review primarily focused on any impact that the proposed EPU may have on hydrogen release assumptions, and how increases in hydrogen release are mitigated. The NRC's acceptance criteria for combustible gas control in containment are based on (1) 10 CFR 50.44, insofar as it requires that plants be provided with the capability for controlling combustible gas concentrations in the containment atmosphere; (2) draft GDC-62, insofar as it requires that all critical parts of containment air cleanup systems, such as ducts, filters, fans, and dampers be designed to permit physical inspection; and (3) draft GDC-63, 64, and 65, insofar as they require that active components of the air cleanup systems be designed to permit appropriate periodic testing. **[*Include the following sentence for BWRs with Mark III containments:* Additional requirements based on 10 CFR 50.44 for control of combustible gas apply to plants with a Mark III type of containment that do not rely on an inerted atmosphere to control hydrogen inside the containment.]** Specific review criteria are contained in SRP Section 6.2.5.

Technical Evaluation

[Insert technical evaluation. The technical evaluation should (1) clearly explain why the proposed changes satisfy each of the requirements in the regulatory evaluation and (2) provide a clear link to the conclusions reached by the NRC staff, as documented in the conclusion section.]

Conclusion

The NRC staff has reviewed the licensee's assessment related to combustible gas and concludes that the plant will continue to have sufficient capabilities consistent with the requirements in 10 CFR 50.44 and draft GDC-62, 63, 64, and 65 as discussed above. Therefore, the NRC staff finds the proposed EPU acceptable with respect to combustible gas control in containment.

2.6.5 Containment Heat Removal

Regulatory Evaluation

Fan cooler systems, spray systems, and residual heat removal (RHR) systems are provided to remove heat from the containment atmosphere and from the water in the containment wetwell. The NRC staff's review in this area focused on (1) the effects of the proposed EPU on the analyses of the available net positive suction head (NPSH) to the containment heat removal system pumps and (2) the analyses of the heat removal capabilities of the spray water system and the fan cooler heat exchangers. The NRC's acceptance criteria for containment heat removal are based on draft GDC-41 and 52, insofar as they require that a containment heat removal system be provided, and that its function shall be to prevent exceeding containment design pressure under accident conditions. Specific review criteria are contained in SRP Section 6.2.2, as supplemented by Draft Guide (DG) 1107.

Technical Evaluation

[Insert technical evaluation. The technical evaluation should (1) clearly explain why the proposed changes satisfy each of the requirements in the regulatory evaluation and (2) provide a clear link to the conclusions reached by the NRC staff, as documented in the conclusion section.]

Conclusion

The NRC staff has reviewed the containment heat removal systems assessment provided by the licensee and concludes that the licensee has adequately addressed the effects of the proposed EPU. The NRC staff finds that the systems will continue to meet draft GDC-41 and 52 with respect to limiting the containment pressure and temperature following a LOCA and maintaining them at acceptably low levels. Therefore, the NRC staff finds the proposed EPU acceptable with respect to containment heat removal systems.

2.6.6 Secondary Containment Functional Design

Regulatory Evaluation

The secondary containment structure and supporting systems of dual containment plants are provided to collect and process radioactive material that may leak from the primary containment following an accident. The supporting systems maintain a negative pressure within the secondary containment and process this leakage. The NRC staff's review covered (1) analyses of the pressure and temperature response of the secondary containment following accidents within the primary and secondary containments; (2) analyses of the effects of openings in the secondary containment on the capability of the depressurization and filtration system to establish a negative pressure in a prescribed time; (3) analyses of any primary containment leakage paths that bypass the secondary containment; (4) analyses of the pressure response of the secondary containment resulting from inadvertent depressurization of the primary containment when there is vacuum relief from the secondary containment; and (5) the acceptability of the mass and energy release data used in the analysis. The NRC staff's review primarily focused on the effects that the proposed EPU may have on the pressure and temperature response and drawdown time of the secondary containment, and the impact this may have on offsite dose. The NRC's acceptance criteria for secondary containment functional design are based on (1) draft GDC-40 and 42, insofar as they require that protection be provided for ESFs against the dynamic effects that might result from plant equipment failures, as well as the effects of a loss of coolant accident; and (2) draft GDC-10, insofar as it requires that reactor containment be designed to sustain the initial effects of gross equipment failures, such as a large coolant boundary break, without loss of required integrity and, together with other engineered safety features as may be necessary, to retain functional capability for as long as the situation requires. Specific review criteria are contained in SRP Section 6.2.3.

Technical Evaluation

[Insert technical evaluation. The technical evaluation should (1) clearly explain why the proposed changes satisfy each of the requirements in the regulatory evaluation and (2) provide a clear link to the conclusions reached by the NRC staff, as documented in the conclusion section.]

Conclusion

The NRC staff has reviewed the licensee's assessment related to the secondary containment pressure and temperature transient and the ability of the secondary containment to provide an essentially leak-tight barrier against uncontrolled release of radioactivity to the environment. The NRC staff concludes that the licensee has adequately accounted for the increase of mass and energy that would result from the proposed EPU and further concludes that the secondary containment and associated systems will continue to provide an essentially leak-tight barrier against the uncontrolled release of radioactivity to the environment following implementation of the proposed EPU. Based on this, the NRC staff also concludes that the secondary containment and associated systems will continue to meet the requirements of draft GDC-10, 40, and 42. Therefore, the NRC staff finds the proposed EPU acceptable with respect to secondary containment functional design.

[2.6.7 Additional Review Areas (Containment Review Considerations)]

[Insert Regulatory Evaluation, Technical Evaluation, and Conclusion sections as necessary]

INSERT 7

FOR

SECTION 3.2 - BWR TEMPLATE SAFETY EVALUATION

2.7 Habitability, Filtration, and Ventilation

2.7.1 Control Room Habitability System

Regulatory Evaluation

The NRC staff reviewed the control room habitability system and control building layout and structures to ensure that plant operators are adequately protected from the effects of accidental releases of toxic and radioactive gases. A further objective of the NRC staff's review was to ensure that the control room can be maintained as the backup center from which technical support center personnel can safely operate in the case of an accident. The NRC staff's review focused on the effects of the proposed EPU on radiation doses, toxic gas concentrations, and estimates of dispersion of airborne contamination. The NRC's acceptance criteria for the control room habitability system are based on (1) draft GDC-40 and 42, insofar as they require that protection be provided for ESFs against the dynamic effects that might result from plant equipment failures, as well as the effects of a loss of coolant accident; and (2) draft GDC-11 and 10CFR50.67, insofar as they require that adequate radiation protection be provided to permit access and occupancy of the control room under accident conditions without personnel receiving radiation exposures in excess of 5 rem TEDE for the duration of the accident. Specific review criteria are contained in SRP Section 6.4 and other guidance provided in Matrix 7 of RS-001.

Technical Evaluation

[Insert technical evaluation. The technical evaluation should (1) clearly explain why the proposed changes satisfy each of the requirements in the regulatory evaluation and (2) provide a clear link to the conclusions reached by the NRC staff, as documented in the conclusion section.]

Conclusion

The NRC staff has reviewed the licensee's assessment related to the effects of the proposed EPU on the ability of the control room habitability system to protect plant operators against the effects of accidental releases of toxic and radioactive gases. The NRC staff concludes that the licensee has adequately accounted for the increase of toxic and radioactive gases that would result from the proposed EPU. The NRC staff further concludes that the control room habitability system will continue to provide the required protection following implementation of the proposed EPU. Based on this, the NRC staff concludes that the control room habitability system will continue to meet the requirements of draft GDC-11, 40, and 42, and 10CFR50.67. Therefore, the NRC staff finds the proposed EPU acceptable with respect to the control room habitability system.

2.7.2 Engineered Safety Feature Atmosphere Cleanup

Regulatory Evaluation

ESF atmosphere cleanup systems are designed for fission product removal in postaccident environments. These systems generally include primary systems (e.g., in-containment recirculation) and secondary systems (e.g., standby gas treatment systems and emergency or postaccident air-cleaning systems) for the fuel-handling building, control room, shield building, and areas containing ESF components. For each ESF atmosphere cleanup system, the NRC staff's review focused on the effects of the proposed EPU on system functional design, environmental design, and provisions to preclude temperatures in the adsorber section from exceeding design limits. The NRC's acceptance criteria for ESF atmosphere cleanup systems are based on (1) draft GDC-11 and 10CFR50.67, insofar as they require that adequate radiation protection be provided to permit access and occupancy of the control room under accident conditions without personnel receiving radiation exposures in excess of 5 rem TEDE for the duration of the accident; (2) draft GDC-67, 68, and 69, insofar as they require that systems that may contain radioactivity be designed to assure adequate safety under normal and postulated accident conditions; and (4) draft GDC-17, insofar as it requires that means be provided for monitoring effluent discharge paths and the plant environs for radioactivity that may be released from normal operations, including anticipated operational occurrences (AOOs), and postulated accidents. Specific review criteria are contained in SRP Section 6.5.1.

Technical Evaluation

[Insert technical evaluation. The technical evaluation should (1) clearly explain why the proposed changes satisfy each of the requirements in the regulatory evaluation and (2) provide a clear link to the conclusions reached by the NRC staff, as documented in the conclusion section.]

Conclusion

The NRC staff has reviewed the licensee's assessment of the effects of the proposed EPU on the ESF atmosphere cleanup systems. The NRC staff concludes that the licensee has adequately accounted for the increase of fission products and changes in expected environmental conditions that would result from the proposed EPU, and the NRC staff further concludes that the ESF atmosphere cleanup systems will continue to provide adequate fission product removal in postaccident environments following implementation of the proposed EPU. Based on this, the NRC staff concludes that the ESF atmosphere cleanup systems will continue to meet the requirements of draft GDC-11, 17, 67, 68, and 69; and 10CFR50.67. Therefore, the NRC staff finds the proposed EPU acceptable with respect to the ESF atmosphere cleanup systems.

2.7.3 Control Room Area Ventilation System

Regulatory Evaluation

The function of the control room area ventilation system (CRAVS) is to provide a controlled environment for the comfort and safety of control room personnel and to support the operability of control room components during normal operation, AOOs, and DBA conditions. The NRC's review of the CRAVS focused on the effects that the proposed EPU will have on the functional performance of safety-related portions of the system. The review included the effects of radiation, combustion, and other toxic products; and the expected environmental conditions in areas served by the CRAVS. The NRC's acceptance criteria for the CRAVS are based on (1) draft GDC-40 and 42, insofar as they require that protection be provided for ESFs against the dynamic effects that might result from plant equipment failures, as well as the effects of a loss of coolant accident; (2) draft GDC-11 and 10CFR50.67, insofar as they require that adequate radiation protection be provided to permit access and occupancy of the control room under accident conditions without personnel receiving radiation exposures in excess of 5 rem TEDE for the duration of the accident; and (3) draft GDC-70, insofar as it requires that the plant design include means to control the release of radioactive effluents. Specific review criteria are contained in SRP Section 9.4.1.

Technical Evaluation

[Insert technical evaluation. The technical evaluation should (1) clearly explain why the proposed changes satisfy each of the requirements in the regulatory evaluation and (2) provide a clear link to the conclusions reached by the NRC staff, as documented in the conclusion section.]

Conclusion

The NRC staff has reviewed the licensee's assessment of the effects of the proposed EPU on the ability of the CRAVS to provide a controlled environment for the comfort and safety of control room personnel and to support the operability of control room components. The NRC staff concludes that the licensee has adequately accounted for the increase of toxic and radioactive gases that would result from a DBA under the conditions of the proposed EPU, and associated changes to parameters affecting environmental conditions for control room personnel and equipment. Accordingly, the NRC staff concludes that the CRAVS will continue to provide an acceptable control room environment for safe operation of the plant following implementation of the proposed EPU. The NRC staff also concludes that the system will continue to suitably control the release of gaseous radioactive effluents to the environment. Based on this, the NRC staff concludes that the CRAVS will continue to meet the requirements of draft GDC-11, 40, 42, and 70, and 10CFR50.67. Therefore, the NRC staff finds the proposed EPU acceptable with respect to the CRAVS.

2.7.4 Spent Fuel Pool Area Ventilation System

Regulatory Evaluation

The function of the spent fuel pool area ventilation system (SFPAVS) is to maintain ventilation in the spent fuel pool equipment areas, permit personnel access, and control airborne radioactivity in the area during normal operation, AOOs, and following postulated fuel handling accidents. The NRC staff's review focused on the effects of the proposed EPU on the functional performance of the safety-related portions of the system. The NRC's acceptance criteria for the SFPAVS are based on (1) draft GDC-70, insofar as it requires that the plant design include means to control the release of radioactive effluents, and (2) draft GDC-67, 68, and 69, insofar as they require that systems which contain radioactivity be designed with appropriate confinement and containment. Specific review criteria are contained in SRP Section 9.4.2.

Technical Evaluation

[Insert technical evaluation. The technical evaluation should (1) clearly explain why the proposed changes satisfy each of the requirements in the regulatory evaluation and (2) provide a clear link to the conclusions reached by the NRC staff, as documented in the conclusion section.]

Conclusion

The NRC staff has reviewed the licensee's assessment of the effects of the proposed EPU on the SFPAVS. The NRC staff concludes that the licensee has adequately accounted for the effects of the proposed EPU on the system's capability to maintain ventilation in the spent fuel pool equipment areas, permit personnel access, control airborne radioactivity in the area, control release of gaseous radioactive effluents to the environment, and provide appropriate containment. Based on this, the NRC staff concludes that the SFPAVS will continue to meet the requirements of draft GDC-67, 68, 69, and 70. Therefore, the NRC staff finds the proposed EPU acceptable with respect to the SFPAVS.

2.7.5 Auxiliary and Radwaste Area and Turbine Areas Ventilation Systems

Regulatory Evaluation

The function of the auxiliary and radwaste area ventilation system (ARAVS) and the turbine area ventilation system (TAVS) is to maintain ventilation in the auxiliary and radwaste equipment and turbine areas, permit personnel access, and control the concentration of airborne radioactive material in these areas during normal operation, during AOOs, and after postulated accidents. The NRC staff's review focused on the effects of the proposed EPU on the functional performance of the safety-related portions of these systems. The NRC's acceptance criteria for the ARAVS and TAVS are based on draft GDC-70, insofar as it requires that the plant design include means to control the release of radioactive effluents. Specific review criteria are contained in SRP Sections 9.4.3 and 9.4.4.

Technical Evaluation

[Insert technical evaluation. The technical evaluation should (1) clearly explain why the proposed changes satisfy each of the requirements in the regulatory evaluation and (2) provide a clear link to the conclusions reached by the NRC staff, as documented in the conclusion section.]

Conclusion

The NRC staff has reviewed the licensee's assessment of the effects of the proposed EPU on the ARAVS and TAVS. The NRC staff concludes that the licensee has adequately accounted for the effects of the proposed EPU on the capability of these systems to maintain ventilation in the auxiliary and radwaste equipment areas and in the turbine area, permit personnel access, control the concentration of airborne radioactive material in these areas, and control release of gaseous radioactive effluents to the environment. Based on this, the NRC staff concludes that the ARAVS and TAVS will continue to meet the requirements of draft GDC-70. Therefore, the NRC staff finds the proposed EPU acceptable with respect to the ARAVS and the TAVS.

2.7.6 Engineered Safety Feature Ventilation System

Regulatory Evaluation

The function of the engineered safety feature ventilation system (ESFVS) is to provide a suitable and controlled environment for ESF components following certain anticipated transients and DBAs. The NRC staff's review for the ESFVS focused on the effects of the proposed EPU on the functional performance of the safety-related portions of the system. The NRC staff's review also covered (1) the ability of the ESF equipment in the areas being serviced by the ventilation system to function under degraded ESFVS performance; (2) the capability of the ESFVS to circulate sufficient air to prevent accumulation of flammable or explosive gas or fuel-vapor mixtures from components (e.g., storage batteries and stored fuel); and (3) the capability of the ESFVS to control airborne particulate material (dust) accumulation. The NRC's acceptance criteria for the ESFVS are based on (1) draft GDC-40 and 42, insofar as they require that protection be provided for ESFs against the dynamic effects and missiles that might result from plant equipment failures, as well as the effects of a loss of coolant accident; (2) draft GDC-24 and 39, insofar as they require onsite and offsite electric power systems be provided to permit functioning of the ESFs and protection systems; and (3) draft GDC-70, insofar as it requires that the plant design include means to control the release of radioactive effluents. Specific review criteria are contained in SRP Section 9.4.5.

Technical Evaluation

[Insert technical evaluation. The technical evaluation should (1) clearly explain why the proposed changes satisfy each of the requirements in the regulatory evaluation and (2) provide a clear link to the conclusions reached by the NRC staff, as documented in the conclusion section.]

Conclusion

The NRC staff has reviewed the licensee's assessment of the effects of the proposed EPU on the ESFVS. The NRC staff concludes that the licensee has adequately accounted for the effects of the proposed EPU on the ability of the ESFVS to provide a suitable and controlled environment for ESF components. The NRC staff further concludes that the ESFVS will continue to assure a suitable environment for the ESF components following implementation of the proposed EPU. The NRC staff also concludes that the ESFVS will continue to suitably control the release of gaseous radioactive effluents to the environment following implementation of the proposed EPU. Based on this, the NRC staff concludes that the ESFVS will continue to meet the requirements of draft GDC-24, 39, 40, 42, and 70. Therefore, the NRC staff finds the proposed EPU acceptable with respect to the ESFVS.

[2.7.7 Additional Review Areas (Habitability, Filtration, and Ventilation)]

[Insert Regulatory Evaluation, Technical Evaluation, and Conclusion sections as necessary]

INSERT 8

FOR

SECTION 3.2 - BWR TEMPLATE SAFETY EVALUATION

2.8 Reactor Systems

2.8.1 Fuel System Design

Regulatory Evaluation

The fuel system consists of arrays of fuel rods, burnable poison rods, spacer grids and springs, end plates, channel boxes, and reactivity control rods. The NRC staff reviewed the fuel system to ensure that (1) the fuel system is not damaged as a result of normal operation and AOOs, (2) fuel system damage is never so severe as to prevent control rod insertion when it is required, (3) the number of fuel rod failures is not underestimated for postulated accidents, and (4) coolability is always maintained. The NRC staff's review covered fuel system damage mechanisms, limiting values for important parameters, and performance of the fuel system during normal operation, AOOs, and postulated accidents. The NRC's acceptance criteria are based on (1) 10 CFR 50.46, insofar as it establishes standards for the calculation of emergency core cooling system (ECCS) performance and acceptance criteria for that calculated performance; (2) draft GDC-6, insofar as it requires that the reactor core be designed to function throughout its design lifetime, without exceeding acceptable fuel damage limits; and (3) draft GDC-37, 41, and 44, insofar as they require that a system to provide abundant emergency core cooling be provided to prevent fuel damage following a LOCA. Specific review criteria are contained in SRP Section 4.2 and other guidance provided in Matrix 8 of RS-001.

Technical Evaluation

[Insert technical evaluation. The technical evaluation should (1) clearly explain why the proposed changes satisfy each of the requirements in the regulatory evaluation and (2) provide a clear link to the conclusions reached by the NRC staff, as documented in the conclusion section.]

Conclusion

The NRC staff has reviewed the licensee's analyses related to the effects of the proposed EPU on the fuel system design of the fuel assemblies, control systems, and reactor core. The NRC staff concludes that the licensee has adequately accounted for the effects of the proposed EPU on the fuel system and demonstrated that (1) the fuel system will not be damaged as a result of normal operation and AOOs, (2) the fuel system damage will never be so severe as to prevent control rod insertion when it is required, (3) the number of fuel rod failures will not be underestimated for postulated accidents, and (4) coolability will always be maintained. Based on this, the NRC staff concludes that the fuel system and associated analyses will continue to meet the requirements of 10 CFR 50.46, draft GDC-6, 37, 41, and 44 following implementation of the proposed EPU. Therefore, the NRC staff finds the proposed EPU acceptable with respect to the fuel system design.

2.8.2 Nuclear Design

Regulatory Evaluation

The NRC staff reviewed the nuclear design of the fuel assemblies, control systems, and reactor core to ensure that fuel design limits will not be exceeded during normal operation and anticipated operational transients, and that the effects of postulated reactivity accidents will not cause significant damage to the RCPB or impair the capability to cool the core. The NRC staff's review covered core power distribution, reactivity coefficients, reactivity control requirements and control provisions, control rod patterns and reactivity worths, criticality, burnup, and vessel irradiation. The NRC's acceptance criteria are based on (1) draft GDC-6, insofar as it requires that the reactor core be designed to function throughout its design lifetime without exceeding acceptable fuel damage limits during any condition of normal operation, including the effects of AOOs; (2) draft GDC-8, insofar as it requires that the reactor core be designed so that the overall power coefficient in the power operating range shall not be positive; (3) draft GDC-7, insofar as it requires that the reactor core be designed to ensure that power oscillations, which could cause damage in excess of acceptable fuel damage limits, are not possible or can be readily suppressed; (4) draft GDC-12, insofar as it requires that instrumentation and controls be provided as required to monitor and maintain variables within prescribed operating ranges; (5) draft GDC-14 and 15, insofar as they require that the protection system be designed to initiate the reactivity control systems automatically to prevent or suppress conditions that could result in exceeding acceptable fuel damage limits and to initiate operation of ESFs under accident situations; (6) draft GDC-31, insofar as it requires that the reactivity control systems be capable of sustaining any single malfunction without causing a reactivity transient which could result in exceeding acceptable fuel damage limits; (7) draft GDC-27 and 28, insofar as they require that at least two independent reactivity control systems be provided, with both systems capable of making and holding the core subcritical from any hot standby or hot operating condition sufficiently fast to prevent exceeding acceptable fuel damage limits; (8) draft GDC-29, insofar as it requires that at least one of the reactivity control systems be capable of making the core subcritical under any condition sufficiently fast to prevent exceeding acceptable fuel damage limits; and (9) draft GDC-32, insofar as it requires that limits, which include considerable margin, be placed on the maximum reactivity worth of control rods or elements and on rates at which reactivity can be increased to ensure that the potential effects of a sudden or large change of reactivity cannot (a) rupture the reactor coolant pressure boundary or (b) disrupt the core, its support structures, or other vessel internals sufficiently to impair the effectiveness of emergency core cooling. Specific review criteria are contained in SRP Section 4.3 and other guidance provided in Matrix 8 of RS-001.

Technical Evaluation

[Insert technical evaluation. The technical evaluation should (1) clearly explain why the proposed changes satisfy each of the requirements in the regulatory evaluation and (2) provide a clear link to the conclusions reached by the NRC staff, as documented in the conclusion section.]

Conclusion

The NRC staff has reviewed the licensee's analyses related to the effect of the proposed EPU on the nuclear design of the fuel assemblies, control systems, and reactor core. The NRC staff concludes that the licensee has adequately accounted for the effects of the proposed EPU on the nuclear design and has demonstrated that the fuel design limits will not be exceeded during normal or anticipated operational transients, and that the effects of postulated reactivity accidents will not cause significant damage to the RCPB or impair the capability to cool the core. Based on this evaluation and in coordination with the reviews of the fuel system design, thermal and hydraulic design, and transient and accident analyses, the NRC staff concludes that the nuclear design of the fuel assemblies, control systems, and reactor core will continue to meet the applicable requirements of draft GDC-6, 7, 8, 12, 14, 15, 27, 28, 29, 31, and 32. Therefore, the NRC staff finds the proposed EPU acceptable with respect to the nuclear design.

2.8.3 Thermal and Hydraulic Design

Regulatory Evaluation

The NRC staff reviewed the thermal and hydraulic design of the core and the RCS to confirm that the design (1) has been accomplished using acceptable analytical methods, (2) is equivalent to or a justified extrapolation from proven designs, (3) provides acceptable margins of safety from conditions which would lead to fuel damage during normal reactor operation and AOOs, and (4) is not susceptible to thermal-hydraulic instability. The review also covered hydraulic loads on the core and RCS components during normal operation and DBA conditions and core thermal-hydraulic stability under normal operation and anticipated transients without scram (ATWS) events. The NRC's acceptance criteria are based on (1) draft GDC-6, insofar as it requires that the reactor core be designed to function throughout its design lifetime without exceeding acceptable fuel damage limits during any condition of normal operation, including the effects of AOOs; and (2) draft GDC-7, insofar as it requires that the reactor core, together with reliable controls, ensure that power oscillations, which could cause damage in excess of acceptable fuel damage limits, are not possible or can be readily suppressed. Specific review criteria are contained in SRP Section 4.4 and other guidance provided in Matrix 8 of RS-001.

Technical Evaluation

[Insert technical evaluation. The technical evaluation should (1) clearly explain why the proposed changes satisfy each of the requirements in the regulatory evaluation and (2) provide a clear link to the conclusions reached by the NRC staff, as documented in the conclusion section.]

Conclusion

The NRC staff has reviewed the licensee's analyses related to the effects of the proposed EPU on the thermal and hydraulic design of the core and the RCS. The NRC staff concludes that the licensee has adequately accounted for the effects of the proposed EPU on the thermal and hydraulic design and demonstrated that the design (1) has been accomplished using acceptable analytical methods, (2) is **[equivalent to or a justified extrapolation from]** proven designs, (3) provides acceptable margins of safety from conditions that would lead to fuel damage during normal reactor operation and AOOs, and (4) is not susceptible to thermal-hydraulic instability. The NRC staff further concludes that the licensee has adequately accounted for the effects of the proposed EPU on the hydraulic loads on the core and RCS components. Based on this, the NRC staff concludes that the thermal and hydraulic design will continue to meet the requirements of draft GDC-6 and 7 following implementation of the proposed EPU. Therefore, the NRC staff finds the proposed EPU acceptable with respect to thermal and hydraulic design.

2.8.4 Emergency Systems

2.8.4.1 Functional Design of Control Rod Drive System

Regulatory Evaluation

The NRC staff's review covered the functional performance of the control rod drive system (CRDS) to confirm that the system can effect a safe shutdown, respond within acceptable limits during AOOs, and prevent or mitigate the consequences of postulated accidents. The review also covered the CRDS cooling system to ensure that it will continue to meet its design requirements. The NRC's acceptance criteria are based on (1) draft GDC-40 and 42, insofar as they require that protection be provided for ESFs against the dynamic effects and missiles that might result from plant equipment failures, as well as the effects of a loss of coolant accident; (2) draft GDC-26, insofar as it requires that the protection system be designed to fail into a safe state; (3) draft GDC-31, insofar as it requires that the reactivity control systems be capable of sustaining any single malfunction without causing a reactivity transient which could result in exceeding acceptable fuel damage limits; (4) draft GDC-27 and 28, insofar as they require that at least two independent reactivity control systems be provided, with both systems capable of making and holding the core subcritical from any hot standby or hot operating condition, sufficiently fast to prevent exceeding acceptable fuel damage limits; (5) draft GDC-29, insofar as it requires that at least one of the reactivity control systems be capable of making the core subcritical under any condition sufficiently fast to prevent exceeding acceptable fuel damage limits; (6) draft GDC-32, insofar as it requires that limits, which include considerable margin, be placed on the maximum reactivity worth of control rods or elements and on rates at which reactivity can be increased to ensure that the potential effects of a sudden or large change of reactivity cannot (a) rupture the reactor coolant pressure boundary or (b) disrupt the core, its support structures, or other vessel internals sufficiently to impair the effectiveness of emergency core cooling; and (7) 10 CFR 50.62(c)(3), insofar as it requires that all BWRs have an alternate rod injection (ARI) system diverse from the reactor trip system, and that the ARI system have redundant scram air header exhaust valves. Specific review criteria are contained in SRP Section 4.6.

Technical Evaluation

[Insert technical evaluation. The technical evaluation should (1) clearly explain why the proposed changes satisfy each of the requirements in the regulatory evaluation and (2) provide a clear link to the conclusions reached by the NRC staff, as documented in the conclusion section.]

Conclusion

The NRC staff has reviewed the licensee's analyses related to the effects of the proposed EPU on the functional design of the CRDS. The NRC staff concludes that the licensee has adequately accounted for the effects of the proposed EPU on the system and demonstrated that the system's ability to effect a safe shutdown, respond within acceptable limits, and prevent or mitigate the consequences of postulated accidents will be maintained following the implementation of the proposed EPU. The NRC staff further concludes that the licensee has demonstrated that sufficient cooling exists to ensure the system's design bases will continue to be followed upon implementation of the proposed EPU. Based on this, the NRC staff concludes

that the fuel system and associated analyses will continue to meet the requirements of draft GDC-26, 27, 28, 29, 31, 32, 40, and 42, and 10 CFR 50.62(c)(3) following implementation of the proposed EPU. Therefore, the NRC staff finds the proposed EPU acceptable with respect to the functional design of the CRDS.

2.8.4.2 Overpressure Protection During Power Operation

Regulatory Evaluation

Overpressure protection for the RCPB during power operation is provided by relief and safety valves and the reactor protection system. The NRC staff's review covered relief and safety valves on the main steamlines and piping from these valves to the suppression pool. The NRC's acceptance criteria are based on (1) draft GDC-9, insofar as it requires that the RCPB be designed and constructed so as to have an exceedingly low probability of gross rupture or significant leakage throughout its design lifetime; and (2) draft GDC-33, 34, and 35, insofar as they require that the RCPB be designed to assure that it behaves in a nonbrittle manner and that the probability of rapidly propagating type failures is minimized. Specific review criteria are contained in SRP Section 5.2.2.

Technical Evaluation

[Insert technical evaluation. The technical evaluation should (1) clearly explain why the proposed changes satisfy each of the requirements in the regulatory evaluation and (2) provide a clear link to the conclusions reached by the NRC staff, as documented in the conclusion section.]

Conclusion

The NRC staff has reviewed the licensee's analyses related to the effects of the proposed EPU on the overpressure protection capability of the plant during power operation. The NRC staff concludes that the licensee has (1) adequately accounted for the effects of the proposed EPU on pressurization events and overpressure protection features and (2) demonstrated that the plant will continue to have sufficient pressure relief capacity to ensure that pressure limits are not exceeded. Based on this, the NRC staff concludes that the overpressure protection features will continue to meet draft GDC-9, 33, 34, and 35 following implementation of the proposed EPU. Therefore, the NRC staff finds the proposed EPU acceptable with respect to overpressure protection during power operation.

2.8.4.3 Reactor Core Isolation Cooling System

Regulatory Evaluation

The reactor core isolation cooling (RCIC) system serves as a standby source of cooling water to provide a limited decay heat removal capability whenever the main feedwater system is isolated from the reactor vessel. In addition, the RCIC system may provide decay heat removal necessary for coping with a station blackout. The water supply for the RCIC system comes from the condensate storage tank, with a secondary supply from the suppression pool. The NRC staff's review covered the effect of the proposed EPU on the functional capability of the system. The NRC's acceptance criteria are based on (1) draft GDC-40 and 42, insofar as they require that protection be provided for ESFs against the dynamic effects that might result from plant equipment failures, as well as the effects of a loss of coolant accident; (2) draft GDC-37, insofar as it requires that ESFs be provided to back up the safety provided by the core design, the RCPB, and their protective systems; (3) draft GDC-51 and 57, insofar as they require that piping systems penetrating containment be designed with appropriate features as necessary to protect from an accidental rupture outside containment and the capability to periodically test the operability of the isolation valves to determine if valve leakage is within acceptable limits; and (4) 10 CFR 50.63, insofar as it requires that the plant withstand and recover from an SBO of a specified duration. Specific review criteria are contained in SRP Section 5.4.6

Technical Evaluation

[Insert technical evaluation. The technical evaluation should (1) clearly explain why the proposed changes satisfy each of the requirements in the regulatory evaluation and (2) provide a clear link to the conclusions reached by the NRC staff, as documented in the conclusion section.]

Conclusion

The NRC staff has reviewed the licensee's analyses related to the effects of the proposed EPU on the ability of the RCIC system to provide decay heat removal following an isolation of main feedwater event and a station blackout event and the ability of the system to provide makeup to the core following a small break in the RCPB. The NRC staff concludes that the licensee has adequately accounted for the effects of the proposed EPU on these events and demonstrated that the RCIC system will continue to provide sufficient decay heat removal and makeup for these events following implementation of the proposed EPU. Based on this, the NRC staff concludes that the RCIC system will continue to meet the requirements of draft GDC-37, 40, 42, 51, and 57, and 10 CFR 50.63 following implementation of the proposed EPU. Therefore, the NRC staff finds the proposed EPU acceptable with respect to the RCIC system.

2.8.4.4 Residual Heat Removal System

Regulatory Evaluation

The RHR system is used to cool down the RCS following shutdown. The RHR system is typically a low pressure system which takes over the shutdown cooling function when the RCS temperature is reduced. The NRC staff's review covered the effect of the proposed EPU on the functional capability of the RHR system to cool the RCS following shutdown and provide decay heat removal. The NRC's acceptance criteria are based on draft GDC-40 and 42, insofar as they require that ESFs be protected against dynamic effects; . Specific review criteria are contained in SRP Section 5.4.7 and other guidance provided in Matrix 8 of RS-001.

Technical Evaluation

[Insert technical evaluation. The technical evaluation should (1) clearly explain why the proposed changes satisfy each of the requirements in the regulatory evaluation and (2) provide a clear link to the conclusions reached by the NRC staff, as documented in the conclusion section.]

Conclusion

The NRC staff has reviewed the licensee's analyses related to the effects of the proposed EPU on the RHR system. The NRC staff concludes that the licensee has adequately accounted for the effects of the proposed EPU on the system and demonstrated that the RHR system will maintain its ability to cool the RCS following shutdown and provide decay heat removal. Based on this, the NRC staff concludes that the RHR system will continue to meet the requirements of draft GDC-40 and 42 following implementation of the proposed EPU. Therefore, the NRC staff finds the proposed EPU acceptable with respect to the RHR system.

2.8.4.5 Standby Liquid Control System

Regulatory Evaluation

The standby liquid control system (SLCS) provides backup capability for reactivity control independent of the control rod system. The SLCS functions by injecting a boron solution into the reactor to effect shutdown. The NRC staff's review covered the effect of the proposed EPU on the functional capability of the system to deliver the required amount of boron solution into the reactor. The NRC's acceptance criteria are based on (1) draft GDC-27 and 28, insofar as they require that at least two independent reactivity control systems, preferably of different design principles, be provided, with both systems capable of making and holding the core subcritical from any hot standby or hot operating condition, sufficiently fast to prevent exceeding acceptable fuel damage limits; (2) draft GDC-29, insofar as it requires that at least one of the reactivity control systems be capable of making the core subcritical under any condition sufficiently fast to prevent exceeding acceptable fuel damage limits; and (3) 10 CFR 50.62(c)(4), insofar as it requires that the SLCS be capable of reliably injecting a borated water solution into the reactor pressure vessel at a boron concentration, boron enrichment, and flow rate that provides a set level of reactivity control. Specific review criteria are contained in SRP Section 9.3.5 and other guidance provided in Matrix 8 of RS-001.

Technical Evaluation

[Insert technical evaluation. The technical evaluation should (1) clearly explain why the proposed changes satisfy each of the requirements in the regulatory evaluation and (2) provide a clear link to the conclusions reached by the NRC staff, as documented in the conclusion section.]

Conclusion

The NRC staff has reviewed the licensee's analyses related to the effects of the proposed EPU on the SLCS and concludes that the licensee has adequately accounted for the effects of the proposed EPU on the system and demonstrated that the system will continue to provide the function of reactivity control independent of the control rod system following implementation of the proposed EPU. Based on this, the NRC staff concludes that the SLCS will continue to meet the requirements of draft GDC-27, 28, and 29, and 10 CFR 50.62(c)(4) following implementation of the proposed EPU. Therefore, the NRC staff finds the proposed EPU acceptable with respect to the SLCS.

2.8.5 Accident and Transient Analyses

2.8.5.1 Decrease in Feedwater Temperature, Increase in Feedwater Flow, Increase in Steam Flow, and Inadvertent Opening of a Main Steam Relief or Safety Valve

Regulatory Evaluation

Excessive heat removal causes a decrease in moderator temperature which increases core reactivity and can lead to a power level increase and a decrease in shutdown margin. Any unplanned power level increase may result in fuel damage or excessive reactor system pressure. Reactor protection and safety systems are actuated to mitigate the transient. The NRC staff's review covered (1) postulated initial core and reactor conditions, (2) methods of thermal and hydraulic analyses, (3) the sequence of events, (4) assumed reactions of reactor system components, (5) functional and operational characteristics of the reactor protection system, (6) operator actions, and (7) the results of the transient analyses. The NRC's acceptance criteria are based on (1) draft GDC-6, insofar as it requires that the reactor core be designed to function throughout its design lifetime without exceeding acceptable fuel damage limits; (2) draft GDC-14 and 15, insofar as they require that the core protection system be designed to act automatically to prevent or suppress conditions that could result in exceeding acceptable fuel damage limits and that protection systems be provided for sensing accident situations and initiating the operation of necessary ESFs; and (3) draft GDC-27 and 28, insofar as they require that at least two reactivity control systems be provided and be capable of making and holding the core subcritical from any hot standby or hot operating condition sufficiently fast to prevent exceeding acceptable fuel damage limits. Specific review criteria are contained in SRP Section 15.1.1-4 and other guidance provided in Matrix 8 of RS-001.

Technical Evaluation

[Insert technical evaluation. The technical evaluation should (1) clearly explain why the proposed changes satisfy each of the requirements in the regulatory evaluation and (2) provide a clear link to the conclusions reached by the NRC staff, as documented in the conclusion section.]

Conclusion

The NRC staff has reviewed the licensee's analyses of the excess heat removal events described above and concludes that the licensee's analyses have adequately accounted for operation of the plant at the proposed power level and were performed using acceptable analytical models. The NRC staff further concludes that the licensee has demonstrated that the reactor protection and safety systems will continue to ensure that the SAFDLs and the RCPB pressure limits will not be exceeded as a result of these events. Based on this, the NRC staff concludes that the plant will continue to meet the requirements of draft GDC-6, 14, 15, 27, and 28 following implementation of the proposed EPU. Therefore, the NRC staff finds the proposed EPU acceptable with respect to the events stated.

2.8.5.2 Decrease in Heat Removal by the Secondary System

2.8.5.2.1 Loss of External Load; Turbine Trip; Loss of Condenser Vacuum; Closure of Main Steam Isolation Valve; and Steam Pressure Regulator Failure (Closed)

Regulatory Evaluation

A number of initiating events may result in unplanned decreases in heat removal by the secondary system. These events result in a sudden reduction in steam flow and, consequently, result in pressurization events. Reactor protection and safety systems are actuated to mitigate the transient. The NRC staff's review covered the sequence of events, the analytical models used for analyses, the values of parameters used in the analytical models, and the results of the transient analyses. The NRC's acceptance criteria are based on (1) draft GDC-6, insofar as it requires that the reactor core be designed to function throughout its design lifetime without exceeding acceptable fuel damage limits; and (2) draft GDC-27 and 28, insofar as they require that at least two reactivity control systems be provided and be capable of making and holding the core subcritical from any hot standby or hot operating condition sufficiently fast to prevent exceeding acceptable fuel damage limits. Specific review criteria are contained in SRP Section 15.2.1-5 and other guidance provided in Matrix 8 of RS-001.

Technical Evaluation

[Insert technical evaluation. The technical evaluation should (1) clearly explain why the proposed changes satisfy each of the requirements in the regulatory evaluation and (2) provide a clear link to the conclusions reached by the NRC staff, as documented in the conclusion section.]

Conclusion

The NRC staff has reviewed the licensee's analyses of the decrease in heat removal events described above and concludes that the licensee's analyses have adequately accounted for operation of the plant at the proposed power level and were performed using acceptable analytical models. The NRC staff further concludes that the licensee has demonstrated that the reactor protection and safety systems will continue to ensure that the SAFDLs and the RCPB pressure limits will not be exceeded as a result of these events. Based on this, the NRC staff concludes that the plant will continue to meet the requirements of draft GDC-6, 27, and 28 following implementation of the proposed EPU. Therefore, the NRC staff finds the proposed EPU acceptable with respect to the events stated.

2.8.5.2.2 Loss of Nonemergency AC Power to the Station Auxiliaries

Regulatory Evaluation

The loss of nonemergency ac power is assumed to result in the loss of all power to the station auxiliaries and the simultaneous tripping of all reactor coolant circulation pumps. This causes a flow coastdown as well as a decrease in heat removal by the secondary system, a turbine trip, an increase in pressure and temperature of the coolant, and a reactor trip. Reactor protection and safety systems are actuated to mitigate the transient. The NRC staff's review covered (1) the sequence of events, (2) the analytical model used for analyses, (3) the values of parameters used in the analytical model, and (4) the results of the transient analyses. The NRC's acceptance criteria are based on (1) draft GDC-6, insofar as it requires that the reactor core be designed to function throughout its design lifetime without exceeding acceptable fuel damage limits; and (2) draft GDC-27 and 28, insofar as they require that at least two reactivity control systems be provided and be capable of making and holding the core subcritical from any hot standby or hot operating condition sufficiently fast to prevent exceeding acceptable fuel damage limits. Specific review criteria are contained in SRP Section 15.2.6 and other guidance provided in Matrix 8 of RS-001.

Technical Evaluation

[Insert technical evaluation. The technical evaluation should (1) clearly explain why the proposed changes satisfy each of the requirements in the regulatory evaluation and (2) provide a clear link to the conclusions reached by the NRC staff, as documented in the conclusion section.]

Conclusion

The NRC staff has reviewed the licensee's analyses of the loss of nonemergency ac power to station auxiliaries event and concludes that the licensee's analyses have adequately accounted for operation of the plant at the proposed power level and were performed using acceptable analytical models. The NRC staff further concludes that the licensee has demonstrated that the reactor protection and safety systems will continue to ensure that the SAFDLs and the RCPB pressure limits will not be exceeded as a result of this event. Based on this, the NRC staff concludes that the plant will continue to meet the requirements of draft GDC-6, 27, and 28 following implementation of the proposed EPU. Therefore, the NRC staff finds the proposed EPU acceptable with respect to the loss of nonemergency ac power to station auxiliaries event.

2.8.5.2.3 Loss of Normal Feedwater Flow

Regulatory Evaluation

A loss of normal feedwater flow could occur from pump failures, valve malfunctions, or a LOOP. Loss of feedwater flow results in an increase in reactor coolant temperature and pressure which eventually requires a reactor trip to prevent fuel damage. Decay heat must be transferred from fuel following a loss of normal feedwater flow. Reactor protection and safety systems are actuated to provide this function and mitigate other aspects of the transient. The NRC staff's review covered (1) the sequence of events, (2) the analytical model used for analyses, (3) the values of parameters used in the analytical model, and (4) the results of the transient analyses. The NRC's acceptance criteria are based on (1) draft GDC-6, insofar as it requires that the reactor core be designed to function throughout its design lifetime without exceeding acceptable fuel damage limits; and (2) draft GDC-27 and 28, insofar as they require that at least two reactivity control systems be provided and be capable of making and holding the core subcritical from any hot standby or hot operating condition sufficiently fast to prevent exceeding acceptable fuel damage limits. Specific review criteria are contained in SRP Section 15.2.7 and other guidance provided in Matrix 8 of RS-001.

Technical Evaluation

[Insert technical evaluation. The technical evaluation should (1) clearly explain why the proposed changes satisfy each of the requirements in the regulatory evaluation and (2) provide a clear link to the conclusions reached by the NRC staff, as documented in the conclusion section.]

Conclusion

The NRC staff has reviewed the licensee's analyses of the loss of normal feedwater flow event and concludes that the licensee's analyses have adequately accounted for operation of the plant at the proposed power level and were performed using acceptable analytical models. The NRC staff further concludes that the licensee has demonstrated that the reactor protection and safety systems will continue to ensure that the SAFDLs and the RCPB pressure limits will not be exceeded as a result of the loss of normal feedwater flow. Based on this, the NRC staff concludes that the plant will continue to meet the requirements of draft GDC-6, 27, and 28 following implementation of the proposed EPU. Therefore, the NRC staff finds the proposed EPU acceptable with respect to the loss of normal feedwater flow event.

2.8.5.3 Decrease in Reactor Coolant System Flow

2.8.5.3.1 Loss of Forced Reactor Coolant Flow

Regulatory Evaluation

A decrease in reactor coolant flow occurring while the plant is at power could result in a degradation of core heat transfer. An increase in fuel temperature and accompanying fuel damage could then result if SAFDLs are exceeded during the transient. Reactor protection and safety systems are actuated to mitigate the transient. The NRC staff's review covered (1) the postulated initial core and reactor conditions, (2) the methods of thermal and hydraulic analyses, (3) the sequence of events, (4) assumed reactions of reactor systems components, (5) the functional and operational characteristics of the reactor protection system, (6) operator actions, and (7) the results of the transient analyses. The NRC's acceptance criteria are based on (1) draft GDC-6, insofar as it requires that the reactor core be designed to function throughout its design lifetime without exceeding acceptable fuel damage limits; and (2) draft GDC-27 and 28, insofar as they require that at least two reactivity control systems be provided and be capable of making and holding the core subcritical from any hot standby or hot operating condition sufficiently fast to prevent exceeding acceptable fuel damage limits. Specific review criteria are contained in SRP Section 15.3.1-2 and other guidance provided in Matrix 8 of RS-001.

Technical Evaluation

[Insert technical evaluation. The technical evaluation should (1) clearly explain why the proposed changes satisfy each of the requirements in the regulatory evaluation and (2) provide a clear link to the conclusions reached by the NRC staff, as documented in the conclusion section.]

Conclusion

The NRC staff has reviewed the licensee's analyses of the decrease in reactor coolant flow event and concludes that the licensee's analyses have adequately accounted for operation of the plant at the proposed power level and were performed using acceptable analytical models. The NRC staff further concludes that the licensee has demonstrated that the reactor protection and safety systems will continue to ensure that the SAFDLs and the RCPB pressure limits will not be exceeded as a result of this event. Based on this, the NRC staff concludes that the plant will continue to meet the requirements of draft GDC-6, 27, and 28 following implementation of the proposed EPU. Therefore, the NRC staff finds the proposed EPU acceptable with respect to the decrease in reactor coolant flow event.

2.8.5.3.2 Reactor Recirculation Pump Rotor Seizure and Reactor Recirculation Pump Shaft Break

Regulatory Evaluation

The events postulated are an instantaneous seizure of the rotor or break of the shaft of a reactor recirculation pump. Flow through the affected loop is rapidly reduced, leading to a reactor and turbine trip. The sudden decrease in core coolant flow while the reactor is at power results in a degradation of core heat transfer which could result in fuel damage. The initial rate of reduction of coolant flow is greater for the rotor seizure event. However, the shaft break event permits a greater reverse flow through the affected loop later during the transient and, therefore, results in a lower core flow rate at that time. In either case, reactor protection and safety systems are actuated to mitigate the transient. The NRC staff's review covered (1) the postulated initial and long-term core and reactor conditions, (2) the methods of thermal and hydraulic analyses, (3) the sequence of events, (4) the assumed reactions of reactor system components, (5) the functional and operational characteristics of the reactor protection system, (6) operator actions, and (7) the results of the transient analyses. The NRC's acceptance criteria are based on (1) draft GDC-32, insofar as it requires that limits, which include considerable margin, be placed on the maximum reactivity worth of control rods or elements and on rates at which reactivity can be increased to ensure that the potential effects of a sudden or large change of reactivity cannot (a) rupture the reactor coolant pressure boundary or (b) disrupt the core, its support structures, or other vessel internals sufficiently to impair the effectiveness of emergency core cooling; and (2) draft GDC-33, 34, and 35, insofar as they require that the RCPB be designed with margin sufficient to assure that, under specified conditions, it will behave in a nonbrittle manner and the probability of rapidly propagating fractures is minimized. Specific review criteria are contained in SRP Section 15.3.3-4 and other guidance provided in Matrix 8 of RS-001.

Technical Evaluation

[Insert technical evaluation. The technical evaluation should (1) clearly explain why the proposed changes satisfy each of the requirements in the regulatory evaluation and (2) provide a clear link to the conclusions reached by the NRC staff, as documented in the conclusion section.]

Conclusion

The NRC staff has reviewed the licensee's analyses of the sudden decrease in core coolant flow events and concludes that the licensee's analyses have adequately accounted for operation of the plant at the proposed power level and were performed using acceptable analytical models. The NRC staff further concludes that the licensee has demonstrated that the reactor protection and safety systems will continue to ensure that the ability to insert control rods is maintained, the RCPB pressure limits will not be exceeded, the RCPB will behave in a nonbrittle manner, the probability of propagating fracture of the RCPB is minimized, and adequate core cooling will be provided. Based on this, the NRC staff concludes that the plant will continue to meet the requirements of draft GDC-32, 33, 34, and 35 following implementation of the proposed EPU. Therefore, the NRC staff finds the proposed EPU acceptable with respect to the sudden decrease in core coolant flow events.

2.8.5.4 Reactivity and Power Distribution Anomalies

2.8.5.4.1 Uncontrolled Control Rod Assembly Withdrawal from a Subcritical or Low Power Startup Condition

Regulatory Evaluation

An uncontrolled control rod assembly withdrawal from subcritical or low power startup conditions may be caused by a malfunction of the reactor control or rod control systems. This withdrawal will uncontrollably add positive reactivity to the reactor core, resulting in a power excursion. The NRC staff's review covered (1) the description of the causes of the transient and the transient itself, (2) the initial conditions, (3) the values of reactor parameters used in the analysis, (4) the analytical methods and computer codes used, and (5) the results of the transient analyses. The NRC's acceptance criteria are based on (1) draft GDC-6, insofar as it requires that the reactor core be designed to function throughout its design lifetime without exceeding acceptable fuel damage limits; (2) draft GDC-14 and 15, insofar as they require that the core protection systems be designed to act automatically to prevent or suppress conditions that could result in exceeding acceptable fuel damage limits and that protection systems be provided for sensing accident situations and initiating the operation of necessary ESFs; and (3) draft GDC-31, insofar as it requires that the reactivity control systems be capable of sustaining any single malfunction without causing a reactivity transient which could result in exceeding acceptable fuel damage limits. Specific review criteria are contained in SRP Section 15.4.1 and other guidance provided in Matrix 8 of RS-001.

Technical Evaluation

[Insert technical evaluation. The technical evaluation should (1) clearly explain why the proposed changes satisfy each of the requirements in the regulatory evaluation and (2) provide a clear link to the conclusions reached by the NRC staff, as documented in the conclusion section.]

Conclusion

The NRC staff has reviewed the licensee's analyses of the uncontrolled control rod assembly withdrawal from a subcritical or low power startup condition and concludes that the licensee's analyses have adequately accounted for the changes in core design necessary for operation of the plant at the proposed power level. The NRC staff also concludes that the licensee's analyses were performed using acceptable analytical models. The NRC staff further concludes that the licensee has demonstrated that the reactor protection and safety systems will continue to ensure the SAFDLs are not exceeded. Based on this, the NRC staff concludes that the plant will continue to meet the requirements of draft GDC-6, 14, 15, and 31 following implementation of the proposed EPU. Therefore, the NRC staff finds the proposed EPU acceptable with respect to the uncontrolled control rod assembly withdrawal from a subcritical or low power startup condition.

2.8.5.4.2 Uncontrolled Control Rod Assembly Withdrawal at Power

Regulatory Evaluation

An uncontrolled control rod assembly withdrawal at power may be caused by a malfunction of the reactor control or rod control systems. This withdrawal will uncontrollably add positive reactivity to the reactor core, resulting in a power excursion. The NRC staff's review covered (1) the description of the causes of the AOO and the description of the event itself, (2) the initial conditions, (3) the values of reactor parameters used in the analysis, (4) the analytical methods and computer codes used, and (5) the results of the associated analyses. The NRC's acceptance criteria are based on (1) draft GDC-6, insofar as it requires that the reactor core be designed to function throughout its design lifetime without exceeding acceptable fuel damage limits; (2) draft GDC-14 and 15, insofar as they require that the core protection systems be designed to act automatically to prevent or suppress conditions that could result in exceeding acceptable fuel damage limits and that protection systems be provided for sensing accident situations and initiating the operation of necessary ESFs; and (3) draft GDC-31, insofar as it requires that the reactivity control systems be capable of sustaining any single malfunction without causing a reactivity transient which could result in exceeding acceptable fuel damage limits. Specific review criteria are contained in SRP Section 15.4.2 and other guidance provided in Matrix 8 of RS-001.

Technical Evaluation

[Insert technical evaluation. The technical evaluation should (1) clearly explain why the proposed changes satisfy each of the requirements in the regulatory evaluation and (2) provide a clear link to the conclusions reached by the NRC staff, as documented in the conclusion section.]

Conclusion

The NRC staff has reviewed the licensee's analyses of the uncontrolled control rod assembly withdrawal at power event and concludes that the licensee's analyses have adequately accounted for the changes in core design required for operation of the plant at the proposed power level. The NRC staff also concludes that the licensee's analyses were performed using acceptable analytical models. The NRC staff further concludes that the licensee has demonstrated that the reactor protection and safety systems will continue to ensure the SAFDLs are not exceeded. Based on this, the NRC staff concludes that the plant will continue to meet the requirements of draft GDC-6, 14, 15, and 31 following implementation of the proposed EPU. Therefore, the NRC staff finds the proposed EPU acceptable with respect to the uncontrolled control rod assembly withdrawal at power.

2.8.5.4.3 Startup of a Recirculation Loop at an Incorrect Temperature and Flow Controller Malfunction Causing an Increase in Core Flow Rate

Regulatory Evaluation

A startup of an inactive loop transient may result in either an increased core flow or the introduction of cooler water into the core. This event causes an increase in core reactivity due to decreased moderator temperature and core void fraction. The NRC staff's review covered (1) the sequence of events, (2) the analytical model, (3) the values of parameters used in the analytical model, and (4) the results of the transient analyses. The NRC's acceptance criteria are based on (1) draft GDC-6, insofar as it requires that the reactor core be designed to function throughout its design lifetime without exceeding acceptable fuel damage limits; (2) draft GDC-14 and 15, insofar as they require that the core protection systems be designed to act automatically to prevent or suppress conditions that could result in exceeding acceptable fuel damage limits and that protection systems be provided for sensing accident situations and initiating the operation of necessary ESFs; (3) draft GDC-32, insofar as it requires that limits, which include considerable margin, be placed on the maximum reactivity worth of control rods or elements and on rates at which reactivity can be increased to ensure that the potential effects of a sudden or large change of reactivity cannot (a) rupture the reactor coolant pressure boundary or (b) disrupt the core, its support structures, or other vessel internals sufficiently to impair the effectiveness of emergency core cooling; and (4) draft GDC-27 and 28, insofar as they require that at least two reactivity control systems be provided and be capable of making and holding the core subcritical from any hot standby or hot operating condition sufficiently fast to prevent exceeding acceptable fuel damage limits. Specific review criteria are contained in SRP Section 15.4.4-5 and other guidance provided in Matrix 8 of RS-001.

Technical Evaluation

[Insert technical evaluation. The technical evaluation should (1) clearly explain why the proposed changes satisfy each of the requirements in the regulatory evaluation and (2) provide a clear link to the conclusions reached by the NRC staff, as documented in the conclusion section.]

Conclusion

The NRC staff has reviewed the licensee's analyses of the increase in core flow event and concludes that the licensee's analyses have adequately accounted for operation of the plant at the proposed power level and were performed using acceptable analytical models. The NRC staff further concludes that the licensee has demonstrated that the reactor protection and safety systems will continue to ensure that the SAFDLs and the RCPB pressure limits will not be exceeded as a result of this event. Based on this, the NRC staff concludes that the plant will continue to meet the requirements of draft GDC-6, 14, 15, 27, 28, and 32 following implementation of the proposed EPU. Therefore, the NRC staff finds the proposed EPU acceptable with respect to the increase in core flow event.

2.8.5.4.4 Spectrum of Rod Drop Accidents

Regulatory Evaluation

The NRC staff evaluated the consequences of a control rod drop accident in the area of reactor physics. The NRC staff's review covered the occurrences that lead to the accident, safety features designed to limit the amount of reactivity available and the rate at which reactivity can be added to the core, the analytical model used for analyses, and the results of the analyses. The NRC's acceptance criteria are based on draft GDC-32, insofar as it requires that limits, which include considerable margin, be placed on the maximum reactivity worth of control rods or elements and on rates at which reactivity can be increased to ensure that the potential effects of a sudden or large change of reactivity cannot (a) rupture the reactor coolant pressure boundary or (b) disrupt the core, its support structures, or other vessel internals sufficiently to impair the effectiveness of emergency core cooling. Specific review criteria are contained in SRP Section 15.4.9 and other guidance provided in Matrix 8 of RS-001.

Technical Evaluation

[Insert technical evaluation. The technical evaluation should (1) clearly explain why the proposed changes satisfy each of the requirements in the regulatory evaluation and (2) provide a clear link to the conclusions reached by the NRC staff, as documented in the conclusion section.]

Conclusion

The NRC staff has reviewed the licensee's analyses of the rod drop accident and concludes that the licensee's analyses have adequately accounted for operation of the plant at the proposed power level and were performed using acceptable analytical models. The NRC staff further concludes that the licensee has demonstrated that appropriate reactor protection and safety systems will prevent postulated reactivity accidents that could (1) result in damage to the RCPB greater than limited local yielding, or (2) cause sufficient damage that would significantly impair the capability to cool the core. Based on this, the NRC staff concludes that the plant will continue to meet the requirements of draft GDC-32 following implementation of the EPU. Therefore, the NRC staff finds the proposed EPU acceptable with respect to the rod drop accident.

2.8.5.5 Inadvertent Operation of ECCS or Malfunction that Increases Reactor Coolant Inventory

Regulatory Evaluation

Equipment malfunctions, operator errors, and abnormal occurrences could cause unplanned increases in reactor coolant inventory. Depending on the temperature of the injected water and the response of the automatic control systems, a power level increase may result and, without adequate controls, could lead to fuel damage or overpressurization of the RCS. Alternatively, a power level decrease and depressurization may result. Reactor protection and safety systems are actuated to mitigate these events. The NRC staff's review covered (1) the sequence of events, (2) the analytical model used for analyses, (3) the values of parameters used in the analytical model, and (4) the results of the transient analyses. The NRC's acceptance criteria are based on (1) draft GDC-6, insofar as it requires that the reactor core be designed to function throughout its design lifetime without exceeding acceptable fuel damage limits; and (2) draft GDC-27 and 28, insofar as they require that at least two reactivity control systems be provided and be capable of making and holding the core subcritical from any hot standby or hot operating condition sufficiently fast to prevent exceeding acceptable fuel damage limits. Specific review criteria are contained in SRP Section 15.5.1-2 and other guidance provided in Matrix 8 of RS-001.

Technical Evaluation

[Insert technical evaluation. The technical evaluation should (1) clearly explain why the proposed changes satisfy each of the requirements in the regulatory evaluation and (2) provide a clear link to the conclusions reached by the NRC staff, as documented in the conclusion section.]

Conclusion

The NRC staff has reviewed the licensee's analyses of the inadvertent operation of ECCS or malfunction that increases reactor coolant inventory and concludes that the licensee's analyses have adequately accounted for operation of the plant at the proposed power level and were performed using acceptable analytical models. The NRC staff further concludes that the licensee has demonstrated that the reactor protection and safety systems will continue to ensure that the SAFDLs and the RCPB pressure limits will not be exceeded as a result of this event. Based on this, the NRC staff concludes that the plant will continue to meet the requirements of draft GDC-6, 27, and 28 following implementation of the proposed EPU. Therefore, the NRC staff finds the proposed EPU acceptable with respect to the inadvertent operation of ECCS or malfunction that increases reactor coolant inventory.

2.8.5.6 Decrease in Reactor Coolant Inventory

2.8.5.6.1 Inadvertent Opening of a Pressure Relief Valve

Regulatory Evaluation

The inadvertent opening of a pressure relief valve results in a reactor coolant inventory decrease and a decrease in RCS pressure. The pressure relief valve discharges into the suppression pool. Normally there is no reactor trip. The pressure regulator senses the RCS pressure decrease and partially closes the turbine control valves (TCVs) to stabilize the reactor at a lower pressure. The reactor power settles out at nearly the initial power level. The coolant inventory is maintained by the feedwater control system using water from the condensate storage tank via the condenser hotwell. The NRC staff's review covered (1) the sequence of events, (2) the analytical model used for analyses, (3) the values of parameters used in the analytical model, and (4) the results of the transient analyses. The NRC's acceptance criteria are based on (1) draft GDC-6, insofar as it requires that the reactor core be designed to function throughout its design lifetime without exceeding acceptable fuel damage limits; and (2) draft GDC-27 and 28, insofar as they require that at least two reactivity control systems be provided and be capable of making and holding the core subcritical from any hot standby or hot operating condition sufficiently fast to prevent exceeding acceptable fuel damage limits. Specific review criteria are contained in SRP Section 15.6.1 and other guidance provided in Matrix 8 of RS-001.

Technical Evaluation

[Insert technical evaluation. The technical evaluation should (1) clearly explain why the proposed changes satisfy each of the requirements in the regulatory evaluation and (2) provide a clear link to the conclusions reached by the NRC staff, as documented in the conclusion section.]

Conclusion

The NRC staff has reviewed the licensee's analyses of the inadvertent opening of a pressure relief valve event and concludes that the licensee's analyses have adequately accounted for operation of the plant at the proposed power level and were performed using acceptable analytical models. The NRC staff further concludes that the licensee has demonstrated that the reactor protection and safety systems will continue to ensure that the SAFDLs and the RCPB pressure limits will not be exceeded as a result of this event. Based on this, the NRC staff concludes that the plant will continue to meet the requirements of draft GDC-6, 27, and 28 following implementation of the proposed EPU. Therefore, the NRC staff finds the proposed EPU acceptable with respect to the inadvertent opening of a pressure relief valve event.

2.8.5.6.2 Emergency Core Cooling System and Loss_of_Coolant Accidents

Regulatory Evaluation

LOCAs are postulated accidents that would result in the loss of reactor coolant from piping breaks in the RCPB at a rate in excess of the capability of the normal reactor coolant makeup system to replenish it. Loss of significant quantities of reactor coolant would prevent heat removal from the reactor core, unless the water is replenished. The reactor protection and ECCS systems are provided to mitigate these accidents. The NRC staff's review covered (1) the licensee's determination of break locations and break sizes; (2) postulated initial conditions; (3) the sequence of events; (4) the analytical model used for analyses, and calculations of the reactor power, pressure, flow, and temperature transients; (5) calculations of peak cladding temperature, total oxidation of the cladding, total hydrogen generation, changes in core geometry, and long-term cooling; (6) functional and operational characteristics of the reactor protection and ECCS systems; and (7) operator actions. The NRC's acceptance criteria are based on (1) 10 CFR § 50.46, insofar as it establishes standards for the calculation of ECCS performance and acceptance criteria for that calculated performance; (2) 10 CFR Part 50, Appendix K, insofar as it establishes required and acceptable features of evaluation models for heat removal by the ECCS after the blowdown phase of a LOCA; (3) draft GDC-40 and 42, insofar as they require that protection be provided for ESFs against the dynamic effects that might result from plant equipment failures, as well as the effects of a LOCA; and (4) draft GDC-37, 41, and 44, insofar as they require that a system to provide abundant emergency core cooling be provided so that fuel and clad damage that would interfere with the emergency core cooling function will be prevented. Specific review criteria are contained in SRP Sections 6.3 and 15.6.5 and other guidance provided in Matrix 8 of RS-001.

Technical Evaluation

[Insert technical evaluation. The technical evaluation should (1) clearly explain why the proposed changes satisfy each of the requirements in the regulatory evaluation and (2) provide a clear link to the conclusions reached by the NRC staff, as documented in the conclusion section.]

Conclusion

The NRC staff has reviewed the licensee's analyses of the LOCA events and the ECCS. The NRC staff concludes that the licensee's analyses have adequately accounted for operation of the plant at the proposed power level and that the analyses were performed using acceptable analytical models. The NRC staff further concludes that the licensee has demonstrated that the reactor protection system and the ECCS will continue to ensure that the peak cladding temperature, total oxidation of the cladding, total hydrogen generation, and changes in core geometry, and long-term cooling will remain within acceptable limits. Based on this, the NRC staff concludes that the plant will continue to meet the requirements of draft GDC-37, 40, 41, 42, and 44, and 10 CFR 50.46 following implementation of the proposed EPU. Therefore, the NRC staff finds the proposed EPU acceptable with respect to the LOCA.

2.8.5.7 Anticipated Transients Without Scrams

Regulatory Evaluation

ATWS is defined as an AOO followed by the failure of the reactor portion of the protection system specified in draft GDC-14 and 15. The regulation at 10 CFR 50.62 requires that:

- each BWR have an ARI system that is designed to perform its function in a reliable manner and be independent (from the existing reactor trip system) from sensor output to the final actuation device.

- each BWR have a standby liquid control system (SLCS) with the capability of injecting into the reactor vessel a borated water solution with reactivity control at least equivalent to the control obtained by injecting 86 gpm of a 13 weight-percent sodium pentaborate decahydrate solution at the natural boron-10 isotope abundance into a 251-inch inside diameter reactor vessel. The system initiation must be automatic.

- each BWR have equipment to trip the reactor coolant recirculation pumps automatically under conditions indicative of an ATWS.

The NRC staff's review was conducted to ensure that (1) the above requirements are met, (2) sufficient margin is available in the setpoint for the SLCS pump discharge relief valve such that SLCS operability is not affected by the proposed EPU, and (3) operator actions specified in the plant's Emergency Operating Procedures are consistent with the generic emergency procedure guidelines/severe accident guidelines (EPGs/SAGs), insofar as they apply to the plant design. In addition, the NRC staff reviewed the licensee's ATWS analysis to ensure that (1) the peak vessel bottom pressure is less than the ASME Service Level C limit of 1500 psig; (2) the peak clad temperature is within the 10 CFR 50.46 limit of 2200 °F; (3) the peak suppression pool temperature is less than the design limit; and (4) the peak containment pressure is less than the containment design pressure. The NRC staff also evaluated the potential for thermal-hydraulic instability in conjunction with ATWS events using the methods and criteria approved by the NRC staff. For this analysis, the NRC staff reviewed the limiting event determination, the sequence of events, the analytical model and its applicability, the values of parameters used in the analytical model, and the results of the analyses. *Insert the following sentence if the licensee relied upon generic vendor analyses* **[The NRC staff reviewed the licensee's justification of the applicability of generic vendor analyses to its plant and the operating conditions for the proposed EPU.]** Review guidance is provided in Matrix 8 of RS-001.

Technical Evaluation

[Insert technical evaluation. The technical evaluation should (1) clearly explain why the proposed changes satisfy each of the requirements in the regulatory evaluation and (2) provide a clear link to the conclusions reached by the NRC staff, as documented in the conclusion section.]

Conclusion

The NRC staff has reviewed the information submitted by the licensee related to ATWS and concludes that the licensee has adequately accounted for the effects of the proposed EPU on ATWS. The NRC staff concludes that the licensee has demonstrated that ARI, SLCS, and recirculation pump trip systems have been installed and that they will continue to meet the requirements of 10 CFR 50.62 and the analysis acceptance criteria following implementation of the proposed EPU. Therefore, the NRC staff finds the proposed EPU acceptable with respect to ATWS.

2.8.6 Fuel Storage

2.8.6.1 New Fuel Storage

Regulatory Evaluation

Nuclear reactor plants include facilities for the storage of new fuel. The quantity of new fuel to be stored varies from plant to plant, depending upon the specific design of the plant and the individual refueling needs. The NRC staff's review covered the ability of the storage facilities to maintain the new fuel in a subcritical array during all credible storage conditions. The review focused on the effect of changes in fuel design on the analyses for the new fuel storage facilities. The NRC's acceptance criteria are based on draft GDC-66, insofar as it requires the prevention of criticality in fuel storage systems by physical systems or processes, preferably utilizing geometrically safe configurations. Specific review criteria are contained in SRP Section 9.1.1.

Technical Evaluation

[Insert technical evaluation. The technical evaluation should (1) clearly explain why the proposed changes satisfy each of the requirements in the regulatory evaluation and (2) provide a clear link to the conclusions reached by the NRC staff, as documented in the conclusion section.]

Conclusion

The NRC staff has reviewed the licensee's analyses related to the effect of the new fuel on the analyses for the new fuel storage facilities and concludes that the new fuel storage facilities will continue to meet the requirements of draft GDC-66 following implementation of the proposed EPU. Therefore, the NRC staff finds the proposed EPU acceptable with respect to the new fuel storage.

2.8.6.2 Spent Fuel Storage

Regulatory Evaluation

Nuclear reactor plants include storage facilities for the wet storage of spent fuel assemblies. The safety function of the spent fuel pool and storage racks is to maintain the spent fuel assemblies in a safe and subcritical array during all credible storage conditions and to provide a safe means of loading the assemblies into shipping casks. The NRC staff's review covered the effect of the proposed EPU on the criticality analysis (e.g., reactivity of the spent fuel storage array and boraflex degradation or neutron poison efficacy). The NRC's acceptance criteria are based on (1) draft GDC-40 and 42, insofar as they require that protection be provided for ESFs against the dynamic effects and missiles that might result from plant equipment failures, as well as the effects of a loss of coolant accident; and (2) draft GDC-66, insofar as it requires that criticality in the fuel storage systems be prevented by physical systems or processes, preferably by use of geometrically safe configurations. Specific review criteria are contained in SRP Section 9.1.2.

Technical Evaluation

[Insert technical evaluation. The technical evaluation should (1) clearly explain why the proposed changes satisfy each of the requirements in the regulatory evaluation and (2) provide a clear link to the conclusions reached by the NRC staff, as documented in the conclusion section.]

Conclusion

The NRC staff has reviewed the licensee's analyses related to the effects of the proposed EPU on the spent fuel storage capability and concludes that the licensee has adequately accounted for the effects of the proposed EPU on the spent fuel rack temperature and criticality analyses. The NRC staff also concludes that the spent fuel pool design will continue to ensure an acceptably low temperature and an acceptable degree of subcriticality following implementation of the proposed EPU. Based on this, the NRC staff concludes that the spent fuel storage facilities will continue to meet the requirements of draft GDC-40, 42, and 66 following implementation of the proposed EPU. Therefore, the NRC staff finds the proposed EPU acceptable with respect to spent fuel storage.

[2.8.7 Additional Review Areas (Reactor Systems)]

[Insert Regulatory Evaluation, Technical Evaluation, and Conclusion sections as necessary]

INSERT 9

FOR

SECTION 3.2 - BWR TEMPLATE SAFETY EVALUATION

2.9 Source Terms and Radiological Consequences Analyses

2.9.1 Source Terms for Radwaste Systems Analyses

Regulatory Evaluation

The NRC staff reviewed the radioactive source term associated with EPUs to ensure the adequacy of the sources of radioactivity used by the licensee as input to calculations to verify that the radioactive waste management systems have adequate capacity for the treatment of radioactive liquid and gaseous wastes. The NRC staff's review included the parameters used to determine (1) the concentration of each radionuclide in the reactor coolant, (2) the fraction of fission product activity released to the reactor coolant, (3) concentrations of all radionuclides other than fission products in the reactor coolant, (4) leakage rates and associated fluid activity of all potentially radioactive water and steam systems, and (5) potential sources of radioactive materials in effluents that are not considered in the plant's [**Updated Safety Analysis Report** *or* **Updated Final Safety Analysis Report**] related to liquid waste management systems and gaseous waste management systems. The NRC's acceptance criteria for source terms are based on (1) 10 CFR Part 20, insofar as it establishes requirements for radioactivity in liquid and gaseous effluents released to unrestricted areas; (2) 10 CFR Part 50, Appendix I, insofar as it establishes numerical guides for design objectives and limiting conditions for operation to meet the "as low as is reasonably achievable" criterion; and (3) draft GDC-70, insofar as it requires that the plant design include means to control the release of radioactive effluents. Specific review criteria are contained in SRP Section 11.1.

Technical Evaluation

[Insert technical evaluation. The technical evaluation should (1) clearly explain why the proposed changes satisfy each of the requirements in the regulatory evaluation and (2) provide a clear link to the conclusions reached by the NRC staff, as documented in the conclusion section.]

Conclusion

The NRC staff has reviewed the radioactive source term associated with the proposed EPU and concludes that the proposed parameters and resultant composition and quantity of radionuclides are appropriate for the evaluation of the radioactive waste management systems. The NRC staff further concludes that the proposed radioactive source term meets the requirements of 10 CFR Part 20, 10 CFR Part 50, Appendix I, and draft GDC-70. Therefore, the NRC staff finds the proposed EPU acceptable with respect to source terms.

NOTE: Use Sections 2.9.2 and 2.9.3 below if the licensee's radiological consequences analyses are based on an alternative source term.

2.9.2 Radiological Consequences Analyses Using Alternative Source Terms

NOTE: There are two cases that may be encountered here: (1) a licensee may be implementing an alternative source term for the first time, or (2) a licensee may have already fully implemented an alternative source term and is revising the previously approved dose analyses that use alternative source term methodologies. The second paragraph for each heading is only needed for a first-time implementation of an alternative source term (either partial or full implementations). Several accidents may have been analyzed - see corresponding SRP sections for further regulatory evaluation text (to be modified), as needed.

Regulatory Evaluation

The NRC staff reviewed the DBA radiological consequences analyses. The radiological consequences analyses reviewed are the LOCA, fuel handling accident (FHA), control rod drop accident (CRDA), and main steamline break (MSLB). The NRC staff's review for each accident analysis included (1) the sequence of events; and (2) models, assumptions, and values of parameter inputs used by the licensee for the calculation of the total effective dose equivalent (TEDE). The NRC's acceptance criteria for radiological consequences analyses using an alternative source term are based on (1) 10 CFR 50.67, insofar as it sets standards for radiological consequences of a postulated accident, and (2) draft GDC-11, insofar as it requires that adequate radiation protection be provided to permit access and occupancy of the control room under accident conditions without personnel receiving radiation exposures in excess of 5 rem TEDE, as defined in 10 CFR 50.2, for the duration of the accident. Specific review criteria are contained in SRP Section 15.0.1.

NOTE: Use the following paragraph for a first implementation of an alternative source term:

The NRC staff reviewed the implementation of alternative source terms. The NRC's acceptance criteria for implementation of alternative source terms are based on (1) 10 CFR 50.67, insofar as it sets standards for the implementation of an alternative source term in current operating nuclear power plants; (2) 10 CFR 50.49, insofar as it requires qualification of safety-related equipment, as defined in that section, including and based on integrated radiation dose during normal and accident conditions; (3) draft GDC-11, insofar as it requires that adequate radiation protection be provided to permit access and occupancy of the control room under accident conditions without personnel receiving radiation exposures in excess of 5 rem TEDE, as defined in 10 CFR 50.2, for the duration of the accident; (4) Paragraph IV.E.8 of 10 CFR Part 50, Appendix E, insofar as it requires a licensee onsite technical support center and a licensee near-site emergency operations facility from which effective direction can be given and effective control can be exercised during an emergency; and (5) plant-specific licensing commitments made in response to NUREG-0737 (Items II.B.2, II.B.3, II.F.1, III.D.1.1, III.A.1.2, and III.D.3.4). Specific review criteria are contained in SRP Sections 15.0.1.

Technical Evaluation

[Insert technical evaluation. The technical evaluation should (1) clearly explain why the proposed changes satisfy each of the requirements in the regulatory evaluation and (2) provide a clear link to the conclusions reached by the NRC staff, as documented in the conclusion section.]

Conclusion

The NRC staff has evaluated the licensee's revised accident analyses performed in support of the proposed EPU and concludes that the licensee has adequately accounted for the effects of the proposed EPU. The NRC staff further concludes that the plant site and the dose-mitigating ESFs remain acceptable with respect to the radiological consequences of postulated DBAs since, as set forth above, the calculated total effective dose equivalent (TEDE) at the exclusion area boundary (EAB), at the low population zone (LPZ) outer boundary, and in the control room meet the exposure guideline values specified in 10 CFR 50.67 and draft GDC-11, as well as applicable acceptance criteria denoted in SRP Section 15.0.1. Therefore, the NRC staff finds the licensee's proposed EPU acceptable with respect to the radiological consequences of DBAs.

NOTE: Use the following paragraph for a first implementation of an alternative source term:

The NRC staff has reviewed the alternative source term methodology used by the licensee in evaluating the effects of the proposed EPU and concludes that changes continue to provide a sufficient margin of safety with adequate defense-in-depth to address unanticipated events and to compensate for uncertainties in accident progression, analysis assumptions, and parameter inputs. Therefore, the NRC staff finds the licensee's proposed EPU acceptable with respect to the implementation of an alternative source term.

[2.9.3 Additional Review Areas (Radiological Consequences Analyses)]

[Insert Regulatory Evaluation, Technical Evaluation, and Conclusion sections as necessary]

NOTE: Use Sections 2.9.2 - 2.9.8 below if the licensee's radiological consequences analyses are not based on an alternative source term (i.e., if the analyses are based on a traditional source term (i.e., TID-14844)

2.9.2 Radiological Consequences of Control Rod Drop Accident

[This section is not applicable because the Vermont Yankee Nuclear Power Station is implementing an alternative source term.]

2.9.3 Radiological Consequences of the Failure of Small Lines Carrying Primary Coolant Outside Containment

[This section is not applicable because the Vermont Yankee Nuclear Power Station is implementing an alternative source term.]

2.9.4 Radiological Consequences of Main Steamline Failure Outside Containment

[This section is not applicable because the Vermont Yankee Nuclear Power Station is implementing an alternative source term.]

2.9.5 Radiological Consequences of a Design-Basis Loss-of-Coolant Accident

[This section is not applicable because the Vermont Yankee Nuclear Power Station is implementing an alternative source term.]

2.9.6 Radiological Consequences of Fuel Handling Accidents

[This section is not applicable because the Vermont Yankee Nuclear Power Station is implementing an alternative source term.]

2.9.7 Radiological Consequences of Spent Fuel Cask Drop Accidents

[This section is not applicable because the Vermont Yankee Nuclear Power Station is implementing an alternative source term.]

[2.9.8 Additional Review Areas (Source Terms and Radiological Consequences Analyses)]

[Insert Regulatory Evaluation, Technical Evaluation, and Conclusion sections as necessary]

INSERT 10

FOR

SECTION 3.2 - BWR TEMPLATE SAFETY EVALUATION

2.10 Health Physics

2.10.1 Occupational and Public Radiation Doses

Regulatory Evaluation

The NRC staff conducted its review in this area to ascertain what overall effects the proposed EPU will have on both occupational and public radiation doses and to determine that the licensee has taken the necessary steps to ensure that any dose increases will be maintained as low as is reasonably achievable. The NRC staff's review included an evaluation of any increases in radiation sources and how this may affect plant area dose rates, plant radiation zones, and plant area accessibility. The NRC staff evaluated how personnel doses needed to access plant vital areas following an accident are affected. The NRC staff considered the effects of the proposed EPU on nitrogen-16 levels in the plant and any effects this increase may have on radiation doses outside the plant and at the site boundary from skyshine. The NRC staff also considered the effects of the proposed EPU on plant effluent levels and any effect this increase may have on radiation doses at the site boundary. The NRC's acceptance criteria for occupational and public radiation doses are based on 10 CFR Part 20 10 CFR 50.67, and draft GDC-11. Specific review criteria are contained in SRP Sections 12.2, 12.3,12.4, and 12.5, and other guidance provided in Matrix 10 of RS-001.

Technical Evaluation

[Insert technical evaluation. The technical evaluation should (1) clearly explain why the proposed changes satisfy each of the requirements in the regulatory evaluation and (2) provide a clear link to the conclusions reached by the NRC staff, as documented in the conclusion section.]

Conclusion

The NRC staff has reviewed the licensee's assessment of the effects of the proposed EPU on radiation source terms and plant radiation levels. The NRC staff concludes that the licensee has taken the necessary steps to ensure that any increases in radiation doses will be maintained as low as reasonably achievable. The NRC staff further concludes that the proposed EPU meets the requirements of 10 CFR Part 20 and draft GDC-11. Therefore, the NRC staff finds the licensee's proposed EPU acceptable with respect to radiation protection and ensuring that occupational radiation exposures will be maintained as low as reasonably achievable.

[2.10.2 Additional Review Areas (Health Physics)]

[Insert Regulatory Evaluation, Technical Evaluation, and Conclusion sections as necessary]

INSERT 11

FOR

SECTION 3.2 - BWR TEMPLATE SAFETY EVALUATION

2.11 Human Performance

2.11.1 Human Factors

Regulatory Evaluation

The area of human factors deals with programs, procedures, training, and plant design features related to operator performance during normal and accident conditions. The NRC staff's human factors evaluation was conducted to ensure that operator performance is not adversely affected as a result of system changes made to implemented the proposed EPU. The NRC staff's review covered changes to operator actions, human-system interfaces, and procedures and training needed for the proposed EPU. The NRC's acceptance criteria for human factors are based on draft GDC-11, 10 CFR 50.120, 10 CFR Part 55, and the guidance in GL 82-33. Specific review criteria are contained in SRP Sections 13.2.1, 13.2.2, 13.5.2.1, and 18.0.

Technical Evaluation

The NRC staff has developed a standard set of questions for the review of the human factors area. The licensee has addressed these questions in its application. Following are the NRC staff's questions, the licensee's responses, and the NRC staff's evaluation of the responses.

1. Changes in Emergency and Abnormal Operating Procedures

   Describe how the proposed EPU will change the plant emergency and abnormal operating procedures. (SRP Section 13.5.2.1)

[Insert licensee's response followed by NRC staff statement on why the response is acceptable]

2. Changes to Operator Actions Sensitive to Power Uprate

   Describe any new operator actions needed as a result of the proposed EPU. Describe changes to any current operator actions related to emergency or abnormal operating procedures that will occur as a result of the proposed EPU. (SRP Section 18.0)

   (i.e., Identify and describe operator actions that will involve additional response time or will have reduced time available. Your response should address any operator workarounds that might affect these response times. Identify any operator actions that are being automated or being changed from automatic to manual as a result of the power uprate. Provide justification for the acceptability of these changes).

[Insert licensee's response followed by NRC staff statement on why the response is acceptable]

3. Changes to Control Room Controls, Displays and Alarms

   Describe any changes the proposed EPU will have on the operator interfaces for control room controls, displays, and alarms. For example, what zone markings (e.g. normal, marginal and out-of-tolerance ranges) on meters will change? What setpoints will change? How will the operators know of the change? Describe any controls, displays, alarms that will be upgraded from analog to digital instruments as a result of the proposed EPU and how operators will be tested to determine they could use the instruments reliably. (SRP Section 18.0)

[Insert licensee's response followed by NRC staff statement on why the response is acceptable]

4. Changes on the Safety Parameter Display System

   Describe any changes to the safety parameter display system resulting from the proposed EPU. How will the operators know of the changes? (SRP Section 18.0)

[Insert licensee's response followed by NRC staff statement on why the response is acceptable]

5. Changes to the Operator Training Program and the Control Room Simulator

   Describe any changes to the operator training program and the plant referenced control room simulator resulting from the proposed EPU, and provide the implementation schedule for making the changes. (SRP Sections 13.2.1 and 13.2.2)

[Insert licensee's response followed by NRC staff statement on why the response is acceptable]

Conclusion

The NRC staff has reviewed the changes to operator actions, human-system interfaces, procedures, and training required for the proposed EPU and concludes that the licensee has (1) appropriately accounted for the effects of the proposed EPU on the available time for operator actions and (2) taken appropriate actions to ensure that operator performance is not adversely affected by the proposed EPU. The NRC staff further concludes that the licensee will continue to meet the requirements of draft GDC-11, 10 CFR 50.120, and 10 CFR Part 55 following implementation of the proposed EPU. Therefore, the NRC staff finds the licensee's proposed EPU acceptable with respect to the human factors aspects of the required system changes.

[2.11.2 Additional Review Areas (Human Performance)]

[Insert Regulatory Evaluation, Technical Evaluation, and Conclusion sections as necessary]

INSERT 12

FOR

SECTION 3.2 - BWR TEMPLATE SAFETY EVALUATION

2.12 Power Ascension and Testing Plan

2.12.1 Approach to EPU Power Level and Test Plan

Regulatory Evaluation

The purpose of the EPU test program is to demonstrate that SSCs will perform satisfactorily in service at the proposed EPU power level. The test program also provides additional assurance that the plant will continue to operate in accordance with design criteria at EPU conditions. The NRC staff's review included an evaluation of: (1) plans for the initial approach to the proposed maximum licensed thermal power level, including verification of adequate plant performance, (2) transient testing necessary to demonstrate that plant equipment will perform satisfactorily at the proposed increased maximum licensed thermal power level, and (3) the test program's conformance with applicable regulations. The NRC's acceptance criteria for the proposed EPU test program are based on 10 CFR Part 50, Appendix B, Criterion XI, which requires establishment of a test program to demonstrate that SSCs will perform satisfactorily in service. Specific review criteria are contained in SRP Section 14.2.1.

Technical Evaluation

[Insert technical evaluation. The technical evaluation should (1) clearly explain why the proposed changes satisfy each of the requirements in the regulatory evaluation and (2) provide a clear link to the conclusions reached by the NRC staff, as documented in the conclusion section.]

Conclusion

The staff has reviewed the EPU test program, including plans for the initial approach to the proposed maximum licensed thermal power level, transient testing necessary to demonstrate that plant equipment will perform satisfactorily at the proposed increased maximum licensed thermal power level, and the test program's conformance with applicable regulations. The staff concludes that the proposed EPU test program provides adequate assurance that the plant will operate in accordance with design criteria and that SSCs affected by the proposed EPU, or modified to support the proposed EPU, will perform satisfactorily in service. Further, the staff finds that there is reasonable assurance that the EPU testing program satisfies the requirements of 10 CFR Part 50, Appendix B, Criterion XI. Therefore, the NRC staff finds the proposed EPU test program acceptable.

[2.12.2 Additional Review Areas (Power Ascension and Testing Plan)]

[Insert Regulatory Evaluation, Technical Evaluation, and Conclusion sections as necessary]

INSERT 13

FOR

SECTION 3.2 - BWR TEMPLATE SAFETY EVALUATION

2.13 Risk Evaluation

2.13.1 Risk Evaluation of EPU

Regulatory Evaluation

The licensee conducted a risk evaluation to (1) demonstrate that the risks associated with the proposed EPU are acceptable and (2) determine if "special circumstances" are created by the proposed EPU. As described in Appendix D of SRP Chapter 19, special circumstances are present if any issue would potentially rebut the presumption of adequate protection provided by the licensee to meet the deterministic requirements and regulations. The NRC staff's review covered the impact of the proposed EPU on core damage frequency (CDF) and large early release frequency (LERF) for the plant due to changes in the risks associated with internal events, external events, and shutdown operations. In addition, the NRC staff's review covered the quality of the risk analyses used by the licensee to support the application for the proposed EPU. This included a review of the licensee's actions to address issues or weaknesses that may have been raised in previous NRC staff reviews of the licensee's individual plant examinations (IPEs) and individual plant examinations of external events (IPEEE), or by an industry peer review. The NRC's risk acceptability guidelines are contained in RG 1.174. Specific review guidance is contained in Matrix 13 of RS-001 and its attachments.

Technical Evaluation

[Insert technical evaluation. The technical evaluation should (1) clearly explain why the proposed changes satisfy each of the requirements in the regulatory evaluation and (2) provide a clear link to the conclusions reached by the NRC staff, as documented in the conclusion section.]

Conclusion

The NRC staff has reviewed the licensee's assessment of the risk implications associated with the implementation of the proposed EPU and concludes that the licensee has adequately modeled and/or addressed the potential impacts associated with the implementation of the proposed EPU. The NRC staff further concludes that the results of the licensee's risk analysis indicate that the risks associated with the proposed EPU are acceptable and do not create the "special circumstances" described in Appendix D of SRP Chapter 19. Therefore, the NRC staff finds the risk implications of the proposed EPU acceptable.

[2.13.2 Additional Review Areas (Risk Evaluation)]

[Insert Regulatory Evaluation, Technical Evaluation, and Conclusion sections as necessary]

Docket No. 50-271
BVY 04-009

Attachment 6

Vermont Yankee Nuclear Power Station

Proposed Technical Specification Change No. 263

Supplement No. 4

Extended Power Uprate – NRC Acceptance Review

Review Matrix

NON-PROPRIETARY VERSION

MATRIX 1

SCOPE AND ASSOCIATED TECHNICAL REVIEW GUIDANCE

Materials and Chemical Engineering

Areas of Review	Applicable to	Primary Review Branch	Secondary Review Branch(es)	SRP Section Number	Focus of SRP Usage	Other Guidance	Template Safety Evaluation Section Number		Cross – Reference to CPPU SAR/CPPU LTR
							BWR	PWR	
Reactor Vessel Material Surveillance Program	All EPUs	EMCB	SRXB	5.3.1 Draft Rev. 2 April 1996	GDC-14 GDC-31 10 CFR Part 50, App. H 10 CFR 50.60	RG 1.190	2.1.1	2.1.1	3.2.1
Pressure-Temperature Limits and Upper-Shelf Energy	All EPUs	EMCB	SRXB	5.3.2 Draft Rev. 2 April 1996	GDC-14 GDC-31 10 CFR Part 50, App. G 10 CFR 50.60	RG 1.161 RG 1.190 RG 1.99	2.1.2	2.1.2	3.2.1
Pressurized Thermal Shock	PWR EPUs	EMCB	SRXB	5.3.2 Draft Rev. 2 April 1996	GDC-14 GDC-31 10 CFR 50.61	RG 1.190 RG 1.154		2.1.3	N/A for BWR's
Reactor Internal and Core Support Materials	All EPUs	EMCB	SRXB	4.5.2 Draft Rev. 3 April 1996	GDC-1 10 CFR 50.55a	Note 1*	2.1.3	2.1.4	10.7

Areas of Review	Applicable to	Primary Review Branch	Secondary Review Branch(es)	SRP Section Number	Focus of SRP Usage	Other Guidance	Template Safety Evaluation Section Number		Cross – Reference to CPPU SAR/CPPU LTR
							BWR	PWR	
Reactor Coolant Pressure Boundary Materials	All EPUs	EMCB	EMEB SRXB	5.2.3 Draft Rev. 3 April 1996	GDC-1 10 CFR 50.55a GDC-4 GDC-14 GDC-31 10 CFR Part 50, App. G	RG 1.190 GL 97-01 IN 00-17s1 BL 01-01 BL 02-01 BL 02-02 Note 2* Note 3*	2.1.4	2.1.5	2.5.3, 3.2.1, 10.7
				4.5.1 Draft Rev. 3 April 1996	GDC-1 10 CFR 50.55a GDC-14				
				5.2.4 Draft Rev. 2 April 1996	10 CFR 50.55a				
				5.3.1 Draft Rev. 2 April 1996	GDC-1 10 CFR 50.55a GDC-4 GDC-14 GDC-31 10 CFR Part 50, App. G				
				5.3.3 Draft Rev. 2 April 1996					
				6.1.1 Draft Rev. 2 April 1996					

Areas of Review	Applicable to	Primary Review Branch	Secondary Review Branch(es)	SRP Section Number	Focus of SRP Usage	Other Guidance	Template Safety Evaluation Section Number		Cross – Reference to CPPU SAR/CPPU LTR
							BWR	PWR	
Leak-Before-Break	PWR EPUs	EMCB		3.6.3 Draft Aug. 1987	GDC-4	NUREG 1061 Vol. 3 Nov. 1984		2.1.6	N/A for BWR's
Protective Coating Systems (Paints) - Organic Materials	All EPUs	EMCB		6.1.2 Draft Rev. 3 April 1996	10 CFR Part 50, App. B RG 1.54		2.1.5	2.1.7	4.2.6 VY NOTE
Effect of EPU on Flow-Accelerated Corrosion	All EPUs	EMCB				Note 4*	2.1.6	2.1.8	10.7
Steam Generator Tube Inservice Inspection	PWR EPUs	EMCB		5.4.2.2 Draft Rev. 2 April 1996	10 CFR 50.55a	Plant TSs RG 1.121 GL 95-03 BL 88-02 GL 95-05 Note 5*		2.1.9	N/A for BWR's
Steam Generator Blowdown System	PWR EPUs	EMCB		10.4.8 Draft Rev. 3 April 1996	GDC-14			2.1.10	N/A for BWR's
Chemical and Volume Control System (Including Boron Recovery System)	PWR EPUs	EMCB	SPLB SRXB	9.3.4 Draft Rev. 3 April 1996	GDC-14 GDC-29			2.1.11	N/A for BWR's

Areas of Review	Applicable to	Primary Review Branch	Secondary Review Branch(es)	SRP Section Number	Focus of SRP Usage	Other Guidance	Template Safety Evaluation Section Number		Cross – Reference to CPPU SAR/CPPU LTR
							BWR	PWR	
Reactor Water Cleanup System	BWR EPUs	EMCB		5.4.8 Draft Rev. 3 April 1996	GDC-14 GDC-60 GDC-61		2.1.7		3.11, 10.7 VY NOTE

Notes:

1. In addition to the SRP, guidance on the neutron irradiation-related threshold for inspection for irradiation-assisted stress-corrosion cracking for BWRs is in BWRVIP-26 and for PWRs in BAW-2248 for E>1 MeV and in WCAP-14577 for E>0.1 MeV. For intergranular stress-corrosion cracking and stress-corrosion cracking in BWRs, review criteria and review guidance is contained in BWRVIP reports and associated staff safety evaluations. For thermal and neutron embrittlement of cast austenitic stainless steel, stress-corrosion cracking, and void swelling, licensees will need to provide plant-specific degradation management programs or participate in industry programs to investigate degradation effects and determine appropriate management programs.

2. For thermal aging of cast austenitic stainless steel, review guidance and criteria is contained in the May 19, 2000, letter from C. Grimes to D. Walters, "Thermal Aging Embrittlement of Cast Austenitic Stainless Steel Components."

3. For intergranular stress corrosion cracking in BWR piping, review criteria and review guidance is contained in BWRVIP reports, NUREG-0313, Revision 2, GL 88-01, Supplement 1 to GL-88-01, and associated safety evaluations.

4. Criteria and review guidance needed to review EPU applications in the area of flow-accelerated corrosion is contained in Electric Power Research Institute (EPRI) Report NSAC-202L-R2, "Recommendations for Effective an Flow-Accelerated Corrosion Program," dated April 1999. This EPRI document is copyrighted. EPRI has provided copies of this document to EMCB for use by NRC staff. Copying of this document, however, is not allowed.

5. Also see the plant-specific license amendments approving alternate repair criteria and redefining inspection boundaries.

VERMONT YANKEE NOTES – MATRIX 1

SE 2.1.5 VY NOTE, Protective Coatings: (VYNPS CPPU affect on containment protective coatings is addressed in response to NRC RAI EMCB C1 (VY reference: RAI #111).

SE 2.1.7 VY NOTE, Reactor Water Cleanup System: The VYNPS Reactor Water Cleanup (RWCU) system flow is selected to be in the range of 0.8% and 1.0% of feedwater flow based on operational history. The existing RWCU flow (and that analyzed for CPPU) of 68,000 lbm/hr is within this range. Furthermore, the CPPU review included evaluation of water chemistry, heat exchanger performance, pump performance, flow control valve capability and filter/demineralizer performance. All aspects of performance were found to be within the design of RWCU at the analyzed flow. The RWCU analysis concludes that:

- There is negligible heat load impact.
- A small increase in filter/demineralizer backwash frequency will occur, but within the capacity of the Radwaste system.
- The slight changes in operating system conditions results from a decrease in inlet temperature and increase in feedwater system operating pressure (527.6 °F to 525.9 °F).
- The RWCU filter/ demineralizer control valve will operate in a slightly more open position to compensate for the increased feedwater pressure.
- The calculated percentage increase in reactor water iron concentration from 16.87 ppb to 20.67 ppb is 22.5%. The feedwater iron flow increased due to the feedwater flow increase. The calculated iron flow rate increases from 0.0077 lbm/hr to 0.0095 lbm/hr.
- RWCU piping and components pressure and temperature ratings are unaffected by CPPU conditions associated with normal operation and transient and accident conditions.
- No changes to instrumentation are required; setpoint changes are not expected due to the negligible system process parameter changes.

MATRIX 2

SCOPE AND ASSOCIATED TECHNICAL REVIEW GUIDANCE

Mechanical and Civil Engineering

Areas of Review	Applicable to	Primary Review Branch	Secondary Review Branch(es)	SRP Section Number	Focus of SRP Usage	Other Guidance	Template Safety Evaluation Section Number		Cross – Reference to CPPU SAR/CPPU LTR
							BWR	PWR	
Pipe Rupture Locations and Associated Dynamic Effects	All EPUs	EMEB		3.6.2 Draft Rev. 2 April 1996	GDC-4		2.2.1	2.2.1	10.1 10.2
Pressure-Retaining Components and Component Supports	All EPUs	EMEB		3.9.1 Draft Rev. 3 April 1996	GDC-1 GDC-2 GDC-14 GDC-15		2.2.2	2.2.2	2.5.3, 3.1, 3.2.2, 3.4, 3.5, 3.7, 3.8
				3.9.2 Draft Rev. 3 April 1996	GDC-1 GDC-2 GDC-4 GDC-14 GDC-15	IN 95-016 IN 02-026			
				3.9.3 Draft Rev. 2 April 1996	10 CFR 50.55a GDC-1 GDC-2 GDC-4 GDC-14 GDC-15	IN 96-049 GL 96-06			
				5.2.1.1 Draft Rev. 3	10 CFR 50.55a GDC-1	RG 1.84 RG 1.147 DG 1.1089			

Areas of Review	Applicable to	Primary Review Branch	Secondary Review Branch(es)	SRP Section Number	Focus of SRP Usage	Other Guidance	Template Safety Evaluation Section Number		Cross – Reference to CPPU SAR/CPPU LTR
							BWR	PWR	
				April 1996		DG 1.1090 DG 1091			
Reactor Pressure Vessel Internals and Core Supports	All EPUs	EMEB		3.9.1 Draft Rev. 3 April 1996	GDC-1 GDC-2		2.2.3	2.2.3	3.1, 3.3 3.4.2
				3.9.2 Draft Rev. 3 April 1996	GDC-1 GDC-2 GDC-4	IN 95-016 IN 02-026			
				3.9.3 Draft Rev. 2 April 1996	10 CFR 50.55a GDC-1 GDC-2 GDC-4	IN 96-049 GL 96-06			
				3.9.5 Draft Rev. 3 April 1996	10 CFR 50.55a GDC-1 GDC-2 GDC-4 GDC-10	IN 02-026 Note 1*			
Safety-Related Valves and Pumps	All EPUs	EMEB		3.9.3 Draft Rev. 2 April 1996	GDC-1 10 CFR 50.55a(f)	IN 96-049 GL 96-06	2.2.4	2.2.4	3.1, 3.8, 4.1.3, 4.1.4, 4.1.6, 4.2 VY NOTE
				3.9.6 Draft Rev. 3 April 1996	GDC-1 GDC-37 GDC-40 GDC-43 GDC-46 GDC-54 10 CFR 50.55a(f)	GL 89-10 GL 95-07 GL 96-05 IN 97-090 IN 96-048s1 IN 96-048 IN 96-003 RIS 00-003 RIS 01-015			

Areas of Review	Applicable to	Primary Review Branch	Secondary Review Branch(es)	SRP Section Number	Focus of SRP Usage	Other Guidance	Template Safety Evaluation Section Number		Cross – Reference to CPPU SAR/CPPU LTR
							BWR	PWR	
			[redacted]			RG 1.147 RG 1.175 DG 1089 DG 1091			
Seismic and Dynamic Qualification of Mechanical and Electrical Equipment	All EPUs	EMEB	EEIB	3.10 Draft Rev. 3 April 1996	GDC-1 GDC-2 GDC-4 GDC-14 GDC-30 10 CFR Part 100, App. A 10 CFR Part 50, App. B USI A-46	[redacted]	2.2.5	2.2.5	10.1, 10.3.3 VY NOTE

Notes:

1. As indicated in IN 2002-26 and Supplement 1 to IN 2002-26, the steam dryers and other plant components recently failed at Quad Cities Units 1 and 2 during operation under extended power uprate (EPU) conditions. The failures occurred as a result of high-cycle fatigue caused by increased flow-induced vibrations at EPU conditions. The staff's review of the reactor internals as part of EPU requests will cover detailed analyses of flow-induced vibration and acoustically-induced vibration (where applicable) on reactor internal components such as steam dryers and separators, and the jet pump sensing lines that are affected by the increased steam and feedwater flow for EPU conditions. In addition, the staff is evaluating the need to address potential adverse effects on other plant components from the increased steam and feedwater flow under EPU conditions.

VERMONT YANKEE NOTES – MATRIX 2

SE 2.2.4 VY NOTE, Safety-Related Valves and Pumps: The VYNPS CPPU affect on safety-related valves and pumps is addressed in response to NRC RAI EMEB B5 (VY reference: RAI #118).

SE 2.2.5 VY NOTE, Seismic and Dynamic Qualification of Mechanical and Electrical Equipment: RS-001 Section 2.2.5 focuses on the qualification of the equipment to withstand seismic events and the dynamic effects associated [with] pipe-whip and jet impingement forces. The RS correctly notes that the primary input motions due to the safe shutdown earthquake (SSE) are not affected by an EPU. The dynamic effects associated with pipe whip and jet impingement were evaluated for CPPU.

MATRIX 3

SCOPE AND ASSOCIATED TECHNICAL REVIEW GUIDANCE

Electrical Engineering

Areas of Review	Applicable to	Primary Review Branch	Secondary Review Branch(es)	SRP Section Number	Focus of SRP Usage	Other Guidance	Template Safety Evaluation Section Number		Cross – Reference to CPPU SAR/CPPU LTR
							BWR	PWR	
Environmental Qualification of Electrical Equipment	All EPUs	EEIB		3.11 Draft Rev. 3 April 1996	10 CFR 50.49		2.3.1	2.3.1	10.3.1 VY NOTE
Offsite Power System	All EPUs	EEIB		8.1 Draft Rev. 3 April 1996	GDC-17	BTP PSB-1 Draft Rev. 3 April 1996 BTP ICSB-11 Draft Rev. 3 April 1996	2.3.2	2.3.2	6.1.1
				8.2 Draft Rev. 4 April 1996	GDC-17				
				8.2, App. A Draft Rev. 4 April 1996	GDC-17				
AC Onsite Power System	All EPUs	EEIB		8.1 Draft Rev. 3 April 1996	GDC-17		2.3.3	2.3.3	6.1.2

Areas of Review	Applicable to	Primary Review Branch	Secondary Review Branch(es)	SRP Section Number	Focus of SRP Usage	Other Guidance	Template Safety Evaluation Section Number		Cross – Reference to CPPU SAR/CPPU LTR
							BWR	PWR	
				8.3.1 Draft Rev. 3 April 1996	GDC-17				
DC Onsite Power System	All EPUs	EEIB		8.1 Draft Rev. 3 April 1996	GDC-17 10 CFR 50.63		2.3.4	2.3.4	6.2
				8.3.2 Draft Rev. 3 April 1996	GDC-17 10 CFR 50.63				
Station Blackout	All EPUs	EEIB	SPLB SRXB	8.1 Draft Rev. 3 April 1996	10 CFR 50.63	Note 1*	2.3.5	2.3.5	9.3.2
				8.2, App. B Draft Rev. 4 April 1996	10 CFR 50.63				

1. The review of station blackout includes the effects of the EPU on systems relied upon for core cooling in the station blackout coping analysis (e.g., condensate storage tank inventory, controls and power supplies for relief valves, residual heat removing system) to ensure that the effects are accounted for in the analysis.

VERMONT YANKEE NOTES – MATRIX 3

SE 2.3.1 VY NOTE, Environmental Qualification of Electrical Equipment: The RS refers to 10 CFR 50.49 for acceptance criteria. Attachment 4 of the VYNPS CPPU submittal does not explicitly refer to 10 CFR 50.49. However, the information provided does address those 10 CFR 50.49 acceptance criteria that are affected by the VYNPS CPPU, namely pressure, temperature, and radiation.

MATRIX 4

SCOPE AND ASSOCIATED TECHNICAL REVIEW GUIDANCE

Instrumentation and Controls

Areas of Review	Applicable to	Primary Review Branch	Secondary Review Branch(es)	SRP Section Number	Focus of SRP Usage	Other Guidance	Template Safety Evaluation Section Number		Cross – Reference to CPPU SAR/CPPU LTR
							BWR	PWR	
Reactor Trip System	All EPUs	EEIB		7.2 Rev. 4 June 1997	10 CFR 50.55(a)(1) 10 CFR 50.55a(h) GDC-1 GDC-4 GDC-13 GDC-19 GDC-20 GDC-21 GDC-22 GDC-23 GDC-24		2.4.1	2.4.1	5.3
Engineered Safety Features Systems	All EPUs	EEIB		7.3 Rev. 4 June 1997			2.4.1	2.4.1	5.3
Safety Shutdown Systems	All EPUs	EEIB		7.4 Rev. 4 June 1997	10 CFR 50.55(a)(1) 10 CFR 50.55a(h) GDC-1 GDC-4 GDC-13 GDC-19 GDC-24		2.4.1	2.4.1	5.3

Areas of Review	Applicable to	Primary Review Branch	Secondary Review Branch(es)	SRP Section Number	Focus of SRP Usage	Other Guidance	Template Safety Evaluation Section Number		Cross – Reference to CPPU SAR/CPPU LTR
							BWR	PWR	
Control Systems	All EPUs	EEIB		7.7 Rev. 4 June 1997	10 CFR 50.55(a)(1) 10 CFR 50.55a(h) GDC-1 GDC-13 GDC-19 GDC-24		2.4.1	2.4.1	5.1, 5.2
Diverse I&C Systems	All EPUs	EEIB		7.8 Rev. 4 June 1997			2.4.1	2.4.1	5.3, 9.3.1
General guidance for use of other SRP Sections related to I&C	All EPUs	EEIB		7.0 Rev. 4 June 1997					

MATRIX 5

SCOPE AND ASSOCIATED TECHNICAL REVIEW GUIDANCE

Plant Systems

Areas of Review	Applicable to	Primary Review Branch	Secondary Review Branch(es)	SRP Section Number	Focus of SRP Usage	Other Guidance	Template Safety Evaluation Section Number		Cross – Reference to CPPU SAR/CPPU LTR
							BWR	PWR	
Flood Protection	EPUs that result in significant increases in fluid volumes of tanks and vessels	SPLB		3.4.1 Rev. 2 July 1981	GDC-2		2.5.1.1.1	2.5.1.1.1	10.1.2 VY NOTE
Equipment and Floor Drainage System	EPUs that result in increases in fluid volumes or in installation of larger capacity pumps or piping systems	SPLB		9.3.3 Rev. 2 July 1981	GDC-2 GDC-4		2.5.1.1.2	2.5.1.1.2	8.1 VY NOTE
Circulating Water System	EPUs that result in increases in fluid volumes associated with the circulating water system or in installation of larger capacity pumps or piping systems	SPLB		10.4.5 Rev. 2 July 1981	GDC-4		2.5.1.1.3	2.5.1.1.3	6.4.2 VY NOTE
Internally Generated Missiles (Outside Containment)	EPUs that result in substantially higher system pressures or changes in existing system configuration	SPLB	EMCB EMEB	3.5.1.1 Rev. 2 July 1981	GDC-4		2.5.1.2.1	2.5.1.2.1	7.1, 10.1.2 VY NOTE
Internally Generated Missiles (Inside Containment)	EPUs that result in substantially higher system pressures or changes in existing system configuration	SPLB	EMCB EMEB	3.5.1.2 Rev. 2 July 1981	GDC-4		2.5.1.2.1	2.5.1.2.1	10.1.2 VY NOTE

Areas of Review	Applicable to	Primary Review Branch	Secondary Review Branch(es)	SRP Section Number	Focus of SRP Usage	Other Guidance	Template Safety Evaluation Section Number		Cross – Reference to CPPU SAR/CPPU LTR
							BWR	PWR	
Turbine Generator	All EPUs except where the application demonstrates that previous analysis is bounding	SPLB		10.2 Rev. 2 July 1981	GDC-4		2.5.1.2.2	2.5.1.2.2	7.1 VY NOTE
Protection Against Postulated Piping Failures in Fluid Systems Outside Containment	EPUs that affect environmental conditions, habitability of the control room, or access to areas important to safe control of postaccident operations	SPLB	EMCB EMEB	3.6.1 Rev. 1 July 1981	GDC-4		2.5.1.3	2.5.1.3	10.1, 10.2 VY NOTE
Fire Protection Program	All EPUs except where the application demonstrates that previous analysis is bounding	SPLB		9.5.1 Rev. 3 July 1981	10 CFR 50.48 10 CFR Part 50, App. R GDC-3 GDC-5	Note 1*	2.5.1.4	2.5.1.4	6.7 VY NOTE
Pressurizer Relief Tank	PWR EPUs that affect pressurizer discharge to the PRT	SPLB	EMEB	5.4.11 Rev. 2 July 1981	GDC-2 GDC-4			2.5.2	N/A for BWR's
Fission Product Control Systems and Structures	All EPUs except where the application demonstrates that previous analysis is bounding	SPLB	EMCB	6.5.3 Rev. 2 July 1981	GDC-41		2.5.2.1	2.5.3.1	4.5 VY NOTE
Main Condenser Evacuation System	EPUs for which the main condenser evacuation system is modified	SPLB		10.4.2 Rev. 2 July 1981	GDC-60 GDC-64		2.5.2.2	2.5.3.2	7.2
Turbine Gland Sealing System	EPUs for which the turbine gland sealing system is modified	SPLB		10.4.3 Rev. 2 July 1981	GDC-60 GDC-64		2.5.2.3	2.5.3.3	7.1 VY NOTE
Main Steam Isolation Valve Leakage Control System	BWR EPU that affect the amount of valve leakage that is assumed and resultant dose consequences.	SPLB		6.7 Rev. 2 July 1981	GDC-54		2.5.2.4		4.6

Areas of Review	Applicable to	Primary Review Branch	Secondary Review Branch(es)	SRP Section Number	Focus of SRP Usage	Other Guidance	Template Safety Evaluation Section Number		Cross – Reference to CPPU SAR/CPPU LTR
							BWR	PWR	
Spent Fuel Pool Cooling and Cleanup System	All EPUs except where the application demonstrates that previous analysis is bounding	SPLB	EMCB	9.1.3 Rev. 1 July 1981	GDC-5 GDC-44 GDC-61	Note 2*	2.5.3.1	2.5.4.1	6.3 VY NOTE
Station Service Water System	All EPUs except where the application demonstrates that previous analysis is bounding	SPLB		9.2.1 Rev. 4 June 1985	GDC-4 GDC-5 GDC-44	GL 89-13 and Suppl. 1 GL 96-06 and Suppl. 1	2.5.3.2	2.5.4.2	6.4.1, 6.4.5
Reactor Auxiliary Cooling Water Systems	All EPUs except where the application demonstrates that previous analysis is bounding	SPLB		9.2.2 Rev. 3 June 1986	GDC-4 GDC-5 GDC-44	GL 89-13 and Suppl. 1 GL 96-06 and Suppl. 1	2.5.3.3	2.5.4.3	6.4.3
Ultimate Heat Sink	All EPUs except where the application demonstrates that previous analysis is bounding	SPLB		9.2.5 Rev. 2 July 1981	GDC-5 GDC-44		2.5.3.4	2.5.4.4	6.4.5 VY NOTE
Auxiliary Feedwater System	PWR EPUs except where the application demonstrates that previous analysis is bounding	SPLB		10.4.9 Rev. 2 July 1981	GDC-4 GDC-5 GDC-19 GDC-34 GDC-44			2.5.4.5	N/A for BWR's
Main Steam Supply System	All EPUs except where the application demonstrates that previous analysis is bounding	SPLB		10.3 Rev. 3 April 1984	GDC-4 GDC-5 GDC-34		2.5.4.1	2.5.5.1	3.5.2, 7.3 VY NOTE

Areas of Review	Applicable to	Primary Review Branch	Secondary Review Branch(es)	SRP Section Number	Focus of SRP Usage	Other Guidance	Template Safety Evaluation Section Number		Cross – Reference to CPPU SAR/CPPU LTR
							BWR	PWR	
Main Condenser	All EPUs except where the application demonstrates that previous analysis is bounding	SPLB		10.4.1 Rev. 2 July 1981	GDC-60		2.5.4.2	2.5.5.2	7.2 VY NOTE
Turbine Bypass System	All EPUs except where the application demonstrates that previous analysis is bounding	SPLB		10.4.4 Rev. 2 July 1981	GDC-4 GDC-34		2.5.4.3	2.5.5.3	7.3
Condensate and Feedwater System	All EPUs except where the application demonstrates that previous analysis is bounding	SPLB		10.4.7 Rev. 3 April 1984	GDC-4 GDC-5 GDC-44		2.5.4.4	2.5.5.4	7.4 VY NOTE
Gaseous Waste Management Systems	EPUs that impact the level of fission products in the reactor coolant system, or the amount of gaseous waste	SPLB	IEPB	11.3 Draft Rev. 3 April 1996	10 CFR 20.1302 GDC-3 GDC-60 GDC-61 10 CFR Part 50, App. I		2.5.5.1	2.5.6.1	8.2 VY NOTE
Liquid Waste Management Systems	EPUs that impact the level of fission products in the reactor coolant system, or the amount of liquid waste	SPLB	IEPB	11.2 Draft Rev. 3 April 1996	10 CFR 20.1302 GDC-60 GDC-61 10 CFR Part 50, App. I		2.5.5.2	2.5.6.2	8.1
Solid Waste Management Systems	EPUs that impact the level of fission products in the reactor coolant system, or the amount of solid waste	SPLB	IEPB	11.4 Draft Rev. 3 April 1996	10 CFR 20.1302 GDC-60 GDC-63 GDC-64 10 CFR Part 71		2.5.5.3	2.5.6.3	8.1
Emergency Diesel Engine Fuel Oil Storage and Transfer System	EPUs that result in higher EDG electrical demands	SPLB		9.5.4 Rev. 2 July 1981	GDC-4 GDC-5 GDC-17		2.5.6.1	2.5.7.1	6.1.1 VY NOTE
Light Load Handling System	EPUs except where the			9.1.4	GDC-61				

Areas of Review	Applicable to	Primary Review Branch	Secondary Review Branch(es)	SRP Section Number	Focus of SRP Usage	Other Guidance	Template Safety Evaluation Section Number		Cross – Reference to CPPU SAR/CPPU LTR
							BWR	PWR	
(Related to Refueling)	application demonstrates that previous analysis is bounding	SPLB	SPSB	Rev. 2 July 1981	GDC-62	[redacted]	2.5.6.2	2.5.7.2	6.8 VY NOTE

Notes:
1. Supplemental guidance for review of fire protection is provided in Attachment 1 to this matrix.

2. Supplemental guidance for review of spent fuel pool cooling is provided in Attachment 2 to this matrix.

VERMONT YANKEE NOTES – MATRIX 5

SE 2.5.1.1.1 VY NOTE, Flood Protection: RS-001 Section 2.5.1.1.1 focuses on increases of fluid volumes in tanks and vessels assumed in the flooding analysis. The limiting flooding events at VYNPS, however, are not controlled by fluid volumes in tanks and vessels, but result from open cycle systems such as Service Water, Fire Water, and Circulating Water System. Since the VYNPS CPPU does not affect the capacities of these systems, the conclusion was that limiting internal flooding scenarios are not adversely affected and remain consistent with the VYNPS design basis.

SE 2.5.1.1.2 VY NOTE, Equipment and Floor Drainage System: RS-001 Section 2.5.1.1.2 focuses on any changes in fluid volumes or pump capacities that are necessary for the proposed EPU and are not consistent with previous assumptions with respect to floor drainage considerations. The design of the VYNPS equipment and floor drains inside and outside of containment has been evaluated to ensure any CPPU-related liquid radwaste increases can be processed. VYNPS has sufficient capacity to handle added liquid increases expected; it can collect and process the drain fluids. The drainage systems backflow at maximum flood levels and infiltration of radioactive water into non radioactive water drains do not change as a result of CPPU. The drainage systems design capability to withstand the effects of earthquakes and to be compatible with environmental conditions does not change as a result of CPPU.

SE 2.5.1.1.3 VY NOTE, Circulating Water System: RS-001 Section 2.5.1.1.3 focuses on changes in flooding analyses due to increases in fluid volumes or increased pump capacity. The VYNPS circulating water system is not being modified for CPPU operation. An evaluation of the circulating water system at CPPU conditions indicates sufficient system capacity to ensure the plant will maintain adequate condenser backpressure while meeting all environmental permit conditions related to the Connecticut River and the plant cooling towers. The affect of CPPU on flooding analyses is addressed under Flood Protection.

SE 2.5.1.2.1 VY NOTE, Internally Generated Missiles (Outside Containment): RS-001 Matrix 5 states that this review criterion is applicable to EPU's that result in substantially higher system pressures or changes in existing system configuration. The VYNPS CPPU will not result in increases in system pressures or configurations that would affect the impact of internally generated missiles on SSC's important to safety.The VYNPS CPPU does not result in any condition (system pressure increase or equipment overspeed) that could result in an increase in the generation of internally generated missiles. In addition, the VYNPS CPPU does not entail any changes in equipment configurations that could change the effect of internally generated missiles on safety-related or non-safety related equipment.

VERMONT YANKEE NOTES – MATRIX 5 (cont.)

SE 2.5.1.2.2 VY NOTE , Turbine Generator: RS-001 Section 2.5.1.2.2 focuses on the effects of the proposed EPU on the turbine overspeed protection features and relates to protection of SSCs important to safety from the effects of turbine missiles by providing a turbine overspeed protection system to minimize the probability of generating turbine missiles. VYNPS evaluated the potential for rotor train overspeeding relative to the steam energy entrapped within the turbine and associated piping and concluded that with integral, non-shrunk-on wheels for both the high- and low-pressure turbines, a separate rotor missile analysis was not required. The turbine hardware modification design evaluated the overspeed trip settings and determined that no changes were required.

SE 2.5.1.3 VY NOTE, HELB Outside Containment: RS-001 Section 2.5.1.3 focuses on plant environmental conditions, control room habitability, and access to areas important to safe control of post-accident operations. Environmental effects are covered in Attachment 4 of the VYNPS CPPU submittal, Section 10.3. Control room habitability is addressed in Section 4.4 of Attachment 4 to the VYNPS CPPU submittal. Access to areas important to safe control of post-accident operations is addressed in the response to RAI IEPB B3 (VY reference: RAI #125) from a radiological perspective.

SE 2.5.1.4 VY NOTE, Fire Protection: Administrative Controls relative to fire protection are addressed in response to NRC RAI SPLB B1 (VY reference: RAI #142).

SE 2.5.2.1 VY NOTE, Fission Product Control Systems and Structures: The VYNPS Standby Gas Treatment System is generically dispositioned under the CLTR as described in Attachment 2 to this letter.

SE 2.5.2.2 VY NOTE, Main Condenser Evacuation System: The Condenser Air Removal (CAR) system piping and components are adequate for operation at EPU conditions without modification. The following aspects of the CAR have been evaluated for this determination:

- non-condensable gas flow capacity of the SJAE system
- capability of the Steam Jet Air Ejectors (SJAEs) to operate satisfactorily with available dilution/motive steam flow
- SJAEs and inter-condensers' performance at the higher expected non-condensable flow and condenser pressure conditions for CPPU, considering water vapor carryover and the maximum expected condensate temperature and flow rate.
- Mechanical vacuum (hogging) pump capability to remove required non-condensable gases from the condenser at CPPU conditions.

VERMONT YANKEE NOTES – MATRIX 5 (cont.)

SE 2.5.2.3 VY NOTE, Turbine Gland Sealing System: RS-001 Matrix 5 states that this review criterion is applicable to EPU's for which the turbine gland sealing system is modified. The turbine gland sealing system is not being modified for the VYNPS CPPU. The CPPU evalutation of the turbine gland seal system, taking into account the modification of the VYNPS main turbine to accept the increased steam flow at CPPU operating conditions, demonstrated that the system is capable of adequately performing its design function without modification. No increase in capacity or changes in any control settings are required for the VYNPS CPPU.

SE 2.5.3.1 VY NOTE, Spent Fuel Pool Cooling and Cleanup System: Attachment 4 of the VYNPS CPPU submittal, Section 6.3, summarizes analysis performed to demonstrate the adequacy of systems designed to cool the spent fuel pool for the CPPU under normal and accident scenarios. The existing fuel pool cleanup system is unaffected by CPPU conditions.

SE 2.5.3.4 VY NOTE, Ultimate Heat Sink: VYNPS uses the Connecticut River as its Ultimate Heat Sink (UHS) to provide cooling water for both normal and accident conditions. This cooling water is delivered by both safety and non-safety related portions of the Service Water System (SWS). Additionally, an Alternate Cooling System (ACS) based on a dedicated portion of the VYNPS cooling towers and RHR Service Water (RHRSW) pumps, is available for the remote scenario where either the intake structure or the downstream dam is lost. All of the SWS and ACS have been evaluated for CPPU conditions. The evaluations have included the consideration of the most limiting environmental conditions for the Connecticut River or cooling tower including peak seasonal river and air temperatures. The increased decay heat load associated with CPPU reactor core post-shutdown conditions were included in the evaluations. As a result of the system and equipment analysis, a modification to re-circulate ACS (RHRSW) pump motor cooler water back to the cooling tower instead of discharging it to the river are planned to ensure adequate inventory is available to meet the 7 day requirement associated with the ACS design basis functional scenario. This modification is the result of the increased decay heat. The following conclusions were reached in the VYNPS CPPU UHS and ACS evaluations:

- No SW flow or supply temperature changes are required to support CPPU normal operation.
- No SW flow or SW supply temperature changes are required to support CPPU LOCA operation.
- No SW flow or SW supply temperature changes are required to support CPPU Shutdown Events operation.
- SW system pump NPSH required and available is unchanged.
- All heat exchangers remain within design temperatures including consideration of tube plugging.
- The ACS cooling tower (deep basin) inventory is assured with the modification to the ACS pump motor cooler flow.
- The ACS pump NPSH and capacity are adequate.

VERMONT YANKEE NOTES – MATRIX 5 (cont.)

- ACS deep basin temperature remains below 130 °F to protect cooling tower fill.
- ACS will maintain required loads including its system components, spent fuel pool and torus within required limits.

SE 2.5.4.1 VY NOTE, Main Steam Supply System: The VYNPS main steam system evaluation at CPPU determined that the existing system design is acceptable for CPPU conditions. Capacity of the steam flow nozzles, steam control valves and steam bypass valves will remain within design specifications. The existing main steam piping is rated for CPPU conditions. Controls that function to admit steam to emergency equipment are unaffected by CPPU as are the associated supply and exhaust systems.

SE 2.5.4.2 VY NOTE, Main Condenser: The VYNPS main condenser system evaluation determined that the existing system design is acceptable for CPPU operating conditions. In addition to the information provided in Attachment 4 to the VYNPS CPPU submittal, Section 7.2, the evaluation also considered heater drain and extraction steam holdup times in the condenser hot well, since VYNPS does not have an MSIV leakage control system. The condenser hotwell inventory is adequate to provide a 2 minute holdup time for CPPU flow conditions.

SE 2.5.4.4 VY NOTE, Condensate and Feedwater System: The feedwater and condensate system was evaluated for capability to operate at CPPU conditions including normal, transient and accident conditions. It was determined that in order to maintain adequate system overpressure the high pressure feedwater heaters would be replaced. Operationally, the evaluation indicates that VYNPS must operate with all three of its feedwater pumps at rated CPPU conditions, a change from the current two pump operation at rated power. Since it was determined that VYNPS could not operate without condensate bypass during condensate demineralizer backwash and precoat, a filtered bypass is to be installed. With the described modifications and operation of three feedwater pumps, the condensate/feedwater system will perform adequately at CPPU conditions. To evaluate the feedwater and condensate systems capability at CPPU conditions, a thorough review of the system operation and equipment design was performed. Evaluation of CPPU process conditions indicate a slight increase in temperatures and flow velocities through the system. The expected increases are within the design of the condensate feedwater system piping and components. Adequate pressure margin will exist as well. The new high pressure feedwater heater design includes higher pressure shells to accommodate the higher extraction steam pressures for CPPU. CPPU feedwater flow requirements will be adequate with the operation of the VYNPS third feedwater pump. The existing arrangement of running all three condensate pumps was found to provide CPPU flow with sufficient NPSH margin. While the feedwater pumps will run within their nameplate ratings, the condensate pumps will exceed their nameplate but remain within the design service factor. The feedwater regulation valve

VERMONT YANKEE NOTES – MATRIX 5 (cont.)

operating point at CPPU will be stable and provide operational flexibility below CPPU power. Other design capability evaluations of condensate/feedwater for CPPU conclude:

- The increased final feedwater temperature can be delivered
- Condenser water level can be maintained; holdup time is adequate
- Water quality with the existing condensate demineralizers is maintained
- Minimum flow requirements are maintained
- Containment isolation capability is unchanged; feedwater check valves inside and outside containment were evaluated
- Sufficient NPSH is available for off normal operating configurations including two feedwater pump/two condensate pump operation
- Capability to supply feedwater under abnormal and accident conditions have not changed relative to the current power level and are adequate

SE 2.5.5.1 VY NOTE, Gaseous Waste Management Systems: The gaseous waste management systems involve the gaseous radwaste system, which deals with the control of radioactive gases collected in the offgas system or the waste gas storage and decay tanks. In addition, it involves the management of condenser air removal system; gland seal exhaust and mechanical vacuum pump operation exhaust; and building ventilation system exhausts. Evaluation of the off gas systems and those connected to it for CPPU concludes that sufficient capacity exists without modification to process expected offgas. Plant procedures exists to test for air infiltration (e.g. condenser) and repair as needed to maintain the off gas system functional.

SE 2.5.6.1 VY NOTE, Emergency Diesel Engine Fuel Oil Storage and Transfer System: RS-001 Matrix 5 states that this review criterion is applicable to EPU's that result in higher EDG electrical demands No new EDG loads will be added and no EDG load increases as a result of CPPU.

SE 2.5.6.2 VY NOTE Light Load Handling System (Related to Refueling): RS-001 Section 2.5.6.2 states that this review criterion is applicable to components and equipment used in handling new fuel at the receiving station and loading of spent fuel into shipping casks. VYNPS is not introducing new fuel designs with the CPPU, therefore the current licensed thermal power fuel handling analysis remains applicable.

NON-PROPRIETARY INFORMATION

MATRIX 6

SCOPE AND ASSOCIATED TECHNICAL REVIEW GUIDANCE

Containment Review Considerations

Areas of Review	Applicable to	Primary Review Branch	Secondary Review Branch(es)	SRP Section Number	Focus of SRP Usage	Other Guidance	Template Safety Eval		Cross – Reference to CPPU SAR/ CPPU LTR
							BWR	PWR	
PWR Dry Containments, Including Subatmospheric Containments	EPUs for PWR plants with dry containments (including subatmospheric containments) except where the application demonstrates that previous analysis is bounding	SPSB		6.2.1 Rev. 2 July 1981 6.2.1.1.A Rev. 2 July 1981	GDC-13 GDC-16 GDC-38 GDC-50 GDC-64			2.6.1	N/A for BWR's
Ice Condenser Containments	EPUs for PWR plants with ice condenser containments except where the application demonstrates that previous analysis is bounding	SPSB		6.2.1 Rev. 2 July 1981 6.2.1.1.B Rev. 2 July 1981	GDC-13 GDC-16 GDC-38 GDC-50 GDC-64			2.6.1	N/A for BWR's
Pressure-Suppression Type BWR Containments	EPUs for BWR plants with pressure-suppression containments except where the application demonstrates that previous analysis is bounding	SPSB		6.2.1 Rev. 2 July 1981 6.2.1.1.C	GDC-4 GDC-13 GDC-16 GDC-50 GDC-64		2.6.1		4.1 through 4.1.2 VY NOTE

Areas of Review	Applicable to	Primary Review Branch	Secondary Review Branch(es)	SRP Section Number	Focus of SRP Usage	Other Guidance	Template Safety Eval		Cross – Reference to CPPU SAR/ CPPU LTR
							BWR	PWR	
				Rev. 6 Aug. 1984					
Subcompartment Analysis	All EPUs except where the application demonstrates that previous analysis is bounding	SPSB		6.2.1 Rev. 2 July 1981 6.2.1.2 Rev. 2 July 1981	GDC-4 GDC-50		2.6.2	2.6.2	4.1.2.3
Mass and Energy Release Analysis for Postulated Loss-of-Coolant	All EPUs except where the application demonstrates that previous analysis is bounding	SPSB		6.2.1 Rev. 2 July 1981 6.2.1.3 Rev. 1 July 1981	GDC-50 10 CFR P App. K		2.6.3.1	2.6.3.1	4.1.1 through 4.1.2.2 VY NOTE
Mass and Energy Release Analysis for Postulated Secondary System Pipe Ruptures	PWR EPUs except where the application demonstrates that previous analysis is bounding	SPSB		6.2.1 Rev. 2 July 1981 6.2.1.4 Rev. 1 July 1981	GDC-50			2.6.3.2	N/A for BWR's

Areas of Review	Applicable to	Primary Review Branch	Secondary Review Branch(es)	SRP Section Number	Focus of SRP Usage	Other Guidance	Template Safety Eval		Cross – Reference to CPPU SAR/ CPPU LTR
							BWR	PWR	
Combustible Gas Control In Containment	EPUs that impact hydrogen release assumptions	SPSB	[redacted]	6.2.5 Rev. 2 July 1981	10 CFR 5 10 CFR 5 GDC-5 GDC-41 GDC-42 GDC-43	[redacted]	2.6.4	2.6.4	4.7 VY NOTE
Containment Heat Removal	All EPUs except where the application demonstrates that previous analysis is bounding	SPSB	[redacted]	6.2.2 Rev. 4 Oct. 1985	GDC-38	DG-1107	2.6.5	2.6.5	3.10, 4.2.6
Secondary Containment Functional Design	EPUs that affect the pressure and temperature response, or draw-down time of the secondary containment	SPSB	[redacted]	6.2.3 Rev. 2 July 1981	GDC-4 GDC-16	[redacted]	2.6.6	[redacted]	4.5 VY NOTE
Minimum Containment Pressure Analysis for Emergency Core Cooling System Performance Capability Studies	PWR EPUs except where the application demonstrates that previous analysis is bounding	SPSB	SRXB	6.2.1 Rev. 2 July 1981 6.2.1.5 Rev. 2 July 1981	10 CFR 5 10 CFR P App. K	[redacted]	[redacted]	2.6.6	N/A for BWR's

VERMONT YANKEE NOTES – MATRIX 6

SE 2.6.1 VY NOTE, Pressure-Suppression Type BWR Containments: In addition to items covered in Attachment 4 to the VYNPS CPPU submittal, RS-001 Section 2.6.1 specifies that the following issues be addressed:

- The consequences of a LOCA occurring within the containment (wetwell).
- The capability of the containment to withstand the effects of steam bypassing the suppression pool.

The VYNPS containment analysis results demonstrate that CPPU did not significantly affect containment pressure and temperature response, therefore these other capabilities would not be significantly affected.

SE 2.6.3.1 VY NOTE, Mass and Energy Release for LOCA: Analysis of the release of high-energy fluids into containment during the VYNPS postulated CPPU LOCA analysis and ECCS performance during the event were performed by GE using NRC-approved methods.

SE 2.6.4 VY NOTE Combustible Gas Control in Containment: Plant specific evaluation of Nitrogen Containment Air Dilution (NCAD) system concludes sufficient capability currently exists to hookup and dilute containment prior to hydrogen/oxygen concentration levels becoming critical in post LOCA scenarios at CPPU conditions. The evaluation included consideration of potential increases in combustible gas concentrations. Existing procedures, monitoring equipment, and functional capability are unaffected by CPPU accident conditions.

SE 2.6.6 VY NOTE, Secondary Containment Functional Design: The VYNPS Standby Gas Treatment System is generically dispositioned under the CLTR as described in Attachment 2 to this letter.

MATRIX 7

SCOPE AND ASSOCIATED TECHNICAL REVIEW GUIDANCE

Habitability, Filtration, and Ventilation

Areas of Review	Applicable to	Primary Review Branch	Secondary Review Branch(es)	SRP Section Number	Focus of SRP Usage	Other Guidance	Template Safety Evaluation Section Number		Cross – Reference to CPPU SAR/CPPU LTR
							BWR	PWR	
Control Room Habitability System	All EPUs except where the application demonstrates that previous analysis is bounding	SPSB	[redacted]	6.4 Draft Rev. 3 April 1996	GDC-4 GDC-19	Note 1* Note 2*	2.7.1	2.7.1	4.4 VY NOTE
ESF Atmosphere Cleanup System	All EPUs except where the application demonstrates that previous analysis is bounding	SPSB	[redacted]	6.5.1 Rev. 2 July 1981	GDC-19 GDC-41 GDC-61 GDC-64	[redacted]	2.7.2	2.7.2	4.5 VY NOTE
Control Room Area Ventilation System	All EPUs except where the application demonstrates that previous analysis is bounding	SPSB	[redacted]	9.4.1 Rev. 2 July 1981	GDC-4 GDC-19 GDC-60	[redacted]	2.7.3	2.7.3	4.4 VY NOTE
Spent Fuel Pool Area Ventilation System	All EPUs except where the application demonstrates that previous analysis is bounding	SPSB	[redacted]	9.4.2 Rev. 2 July 1981	GDC-60 GDC-61	[redacted]	2.7.4	2.7.4	6.6 VY NOTE
Auxiliary and Radwaste Area Ventilation System	All EPUs except where the application demonstrates that previous analysis is bounding	SPSB	[redacted]	9.4.3 Rev. 2 July 1981	GDC-60	[redacted]	2.7.5	2.7.5	6.6 VY NOTE

Areas of Review	Applicable to	Primary Review Branch	Secondary Review Branch(es)	SRP Section Number	Focus of SRP Usage	Other Guidance	Template Safety Evaluation Section Number		Cross – Reference to CPPU SAR/CPPU LTR
							BWR	PWR	
Turbine Area Ventilation System	All EPUs except where the application demonstrates that previous analysis is bounding	SPSB	[redacted]	9.4.4 Rev. 2 July 1981	GDC-60	[redacted]	2.7.5	2.7.5	6.6 VY NOTE
ESF Ventilation System	All EPUs except where the application demonstrates that previous analysis is bounding	SPSB	[redacted]	9.4.5 Rev. 2 July 1981	GDC-4 GDC-17 GDC-60	[redacted]	2.7.6	2.7.6	6.6 VY NOTE

Notes:

1. Under SRP Section 6.4, Section II, "Acceptance Criteria," the discussion for Item C related to GDC-19 should be supplemented with "and providing a suitably controlled environment for the control room operators and the equipment located therein."

2. Under SRP Section 6.4, Section II, Item 2, "Ventilation System Criteria," the discussion related to review of the control room area ventilation system under SRP Section 9.4.1 should be retained.

VERMONT YANKEE NOTES – MATRIX 7

SE 2.7.1 VY NOTE, Control Room Habitability System: The VYNPS Control Room Habitability System evaluation is contained in the VYNPS Alternative Source Term license amendment request, CPPU license amendment request Reference 33.

SE 2.7.2 VY NOTE, ESF Atmosphere Cleanup: The VYNPS Standby Gas Treatment System is generically dispositioned under the CLTR as described in Attachment 2 to this letter.

SE 2.7.3 VY NOTE, Control Room Area Ventilation System: The VYNPS Control Room Area Ventilation System was evaluated for Control Room doses during accidents as part of the previous VYNPS Alternative Source Term submittal.

SE 2.7.4 VY NOTE, Spent Fuel Pool Area Ventilation System: The VYNPS Spent Fuel Pool Area Ventilation System is part of the Reactor Building HVAC (RBHVAC) System. The Reactor Building HVAC effect from CPPU is addressed in Attachment 4 to the VYNPS CPPU submittal, Section 6.6.

SE 2.7.5 VY NOTE, Auxiliary and Radwaste Area Ventilation System: VYNPS does not have an Auxiliary Building. However, the Reactor Building HVAC effect from CPPU is addressed in Attachment 4 to the VYNPS CPPU submittal, Section 6.6. These Area Ventilation Systems are addressed in Section 6.6 as they relate to the changes to the environment controlled by the associated HVAC system. Section 6.6 states that there is either no change in the environment or the change is bounded by existing analysis for these areas.

SE 2.7.5 VY NOTE, Turbine Area Ventilation System: Attachment 4 to the VYNPS CPPU submittal, Section 6.6, relates the changes to the environment maintained by the TB HVAC. There is either no change in the environment or the change is bounded by existing analysis for the Turbine Building areas.

SE 2.7.6 VY NOTE, ESF Ventilation System: The VYNPS CPPU ESF Ventilation System evaluation identified minor temperature changes for the drywell and steam tunnels, as stated in Attachment 4 to the VYNPS CPPU submittal, Section 6.6. There is no change to the environments controlled by Diesel Generator Room HVAC and ECCS Corner Room HVAC for CPPU normal operations. The VYNPS CPPU Environmental Qualification evaluation assessed the increase in post-LOCA heat-up in the ECCS corner rooms as a result of CPPU. The evaluation confirmed that affected equipment was environmentally qualified to function at the slightly higher corner room temperatures.

NON-PROPRIETARY INFORMATION

MATRIX 8

SCOPE AND ASSOCIATED TECHNICAL REVIEW GUIDANCE

Reactor Systems

Areas of Review	Applicable to	Primary Review Branch	Secondary Review Branch(es)	SRP Section Number	Focus of SRP Usage	Other Guidance	Template Safety Evaluation Section Number		Cross – Reference to CPPU SAR/CPPU LTR
							BWR	PWR	
Fuel System Design	All EPUs	SRXB	[redacted]	4.2 Draft Rev. 3 April 1996	10 CFR 50.46 GDC-10 GDC-27 GDC-35	Note 1* Note 2*	2.8.1	2.8.1	2.1, 2.2, 4.3
Nuclear Design	All EPUs	SRXB	[redacted]	4.3 Draft Rev. 3 April 1996	GDC-10 GDC-11 GDC-12 GDC-13 GDC-20 GDC-25 GDC-26 GDC-27 GDC-28	RG 1.190 GSI 170 IN 97-085	2.8.2	2.8.2	2.1, 2.2, 2.3, 2.4, 2.5, 4.3, Section 5, 9.1, 9.2 VY NOTE
Thermal and Hydraulic Design	All EPUs	SRXB	[redacted]	4.4 Draft Rev. 2 April 1996	GDC-10 GDC-12	Note 3*	2.8.3	2.8.3	2.2, 2.3, 2.4 VY NOTE

Areas of Review	Applicable to	Primary Review Branch	Secondary Review Branch(es)	SRP Section Number	Focus of SRP Usage	Other Guidance	Template Safety Evaluation Section Number		Cross – Reference to CPPU SAR/CPPU LTR
							BWR	PWR	
Functional Design of Control Rod Drive System	All EPUs	SRXB	SPLB	4.6 Draft Rev. 2 April 1996	GDC-4 GDC-23 GDC-25 GDC-26 GDC-27 GDC-28 GDC-29 10 CFR 50.62(c)(3)		2.8.4.1	2.8.4.1	2.5 VY NOTE
Overpressure Protection during Power Operation	All EPUs	SRXB		5.2.2 Draft Rev. 3 April 1996	GDC-15 GDC-31	Note 4*	2.8.4.2	2.8.4.2	3.1
Overpressure Protection during Low Temperature Operation	PWR EPUs	SRXB		5.2.2 Draft Rev. 3 April 1996	GDC-15 GDC-31			2.8.4.3	N/A for BWR's
Reactor Core Isolation Cooling System	BWR EPUs	SRXB		5.4.6 Draft Rev. 4 April 1996	GDC-4 GDC-5 GDC-29 GDC-33 GDC-34 GDC-54 10 CFR 50.63		2.8.4.3		3.9 VY NOTE
Residual Heat Removal System	All EPUs	SRXB		5.4.7 Draft Rev. 4 April 1996	GDC-4 GDC-5 GDC-19 GDC-34	Note 5*	2.8.4.4	2.8.4.4	3.10 VY NOTE

Areas of Review	Applicable to	Primary Review Branch	Secondary Review Branch(es)	SRP Section Number	Focus of SRP Usage	Other Guidance	Template Safety Evaluation Section Number		Cross – Reference to CPPU SAR/CPPU LTR
							BWR	PWR	
Emergency Core Cooling System	All EPUs	SRXB		6.3 Draft Rev. 3 April 1996	GDC-4 GDC-27 GDC-35 10 CFR 50.46 10 CFR Part 50, App. K	Note 6*	2.8.5.6.2	2.8.5.6.3	Table 1-1, 4.2 4.3
Standby Liquid Control System	BWR EPUs	SRXB	EMCB SPLB	9.3.5 Draft Rev. 3 April 1996	GDC-26 GDC-27 10 CFR 50.62(c)(4)	Note 10*	2.8.4.5		6.5 VY NOTE
Decrease in Feedwater Temperature, Increase in Feedwater Flow, Increase in Steam Flow, and Inadvertent Opening of a Steam Generator Relief or Safety Valve	All EPUs	SRXB		15.1.1-4 Draft Rev. 2 April 1996	GDC-10 GDC-15 GDC-20 GDC-26	Note 7*	2.8.5.1	2.8.5.1.1	9.1 VY NOTE
Steam System Piping Failures Inside and Outside of Containment	PWR EPUs	SRXB		15.1.5 Draft Rev. 3 April 1996	GDC-27 GDC-28 GDC-31 GDC-35	Note 7*		2.8.5.1.2	N/A for BWR's
Loss of External Load; Turbine Trip, Loss of Condenser Vacuum; Closure of Main Steam Isolation Valve (BWR); and Steam Pressure Regulator Failure (Closed)	All EPUs	SRXB		15.2.1-5 Draft Rev. 2 April 1996	GDC-10 GDC-15 GDC-26	Note 7*	2.8.5.2.1	2.8.5.2.1	3.1, 9.1 VY NOTE

Areas of Review	Applicable to	Primary Review Branch	Secondary Review Branch(es)	SRP Section Number	Focus of SRP Usage	Other Guidance	Template Safety Evaluation Section Number		Cross – Reference to CPPU SAR/CPPU LTR
							BWR	PWR	
Loss of Nonemergency AC Power to the Station Auxiliaries	All EPUs	SRXB	[redacted]	15.2.6 Draft Rev. 2 April 1996	GDC-10 GDC-15 GDC-26	Note 7*	2.8.5.2.2	2.8.5.2.2	3.1, 9.1 VY NOTE
Loss of Normal Feedwater Flow	All EPUs	SRXB	EEIB	15.2.7 Draft Rev. 2 April 1996	GDC-10 GDC-15 GDC-26	Note 7*	2.8.5.2.3	2.8.5.2.3	9.1
Feedwater System Pipe Breaks Inside and Outside Containment	PWR EPUs	SRXB	EEIB	15.2.8 Draft Rev. 2 April 1996	GDC-27 GDC-28 GDC-31 GDC-35	Note 7*	[redacted]	2.8.5.2.4	N/A for BWR's
Loss of Forced Reactor Coolant Flow Including Trip of Pump Motor and Flow Controller Malfunctions	All EPUs	SRXB	[redacted]	15.3.1-2 Draft Rev. 2 April 1996	GDC-10 GDC-15 GDC-26	Note 7*	2.8.5.3.1	2.8.5.3.1	9.1 VY NOTE
Reactor Coolant Pump Rotor Seizure and Reactor Coolant Pump Shaft Break	All EPUs	SRXB	[redacted]	15.3.3-4 Draft Rev. 3 April 1996	GDC-27 GDC-28 GDC-31	Note 7*	2.8.5.3.2	2.8.5.3.2	9.1 VY NOTE
Uncontrolled Control Rod Assembly Withdrawal from a Subcritical or Low Power Startup Condition	All EPUs	SRXB	[redacted]	15.4.1 Draft Rev. 3 April 1996	GDC-10 GDC-20 GDC-25	Note 7*	2.8.5.4.1	2.8.5.4.1	5.1.2, 5.3.4, VY NOTE
Uncontrolled Control Rod Assembly Withdrawal at Power	All EPUs	SRXB	[redacted]	15.4.2 Draft Rev. 3 April 1996	GDC-10 GDC-20 GDC-25	Note 7*	2.8.5.4.2	2.8.5.4.2	5.3.5, 9.1 VY NOTE

Areas of Review	Applicable to	Primary Review Branch	Secondary Review Branch(es)	SRP Section Number	Focus of SRP Usage	Other Guidance	Template Safety Evaluation Section Number		Cross – Reference to CPPU SAR/CPPU LTR
							BWR	PWR	
Control Rod Misoperation (System Malfunction or Operator Error)	PWR EPUs	SRXB	[redacted]	15.4.3 Draft Rev. 3 April 1996	GDC-10 GDC-20 GDC-25	Note 7*	[redacted]	2.8.5.4.3	N/A for BWR's
Startup of an Inactive Loop or Recirculation Loop at an Incorrect Temperature, and Flow Controller Malfunction Causing an Increase in BWR Core Flow Rate	All EPUs	SRXB	[redacted]	15.4.4-5 Draft Rev. 2 April 1996	GDC-10 GDC-15 GDC-20 GDC-26 GDC-28	Note 7*	2.8.5.4.3	2.8.5.4.4	9.1.2 VY NOTE
Chemical and Volume Control System Malfunction that Results in a Decrease in Boron Concentration in the Reactor Coolant	PWR EPUs	SRXB	[redacted]	15.4.6 Draft Rev. 2 April 1996	GDC-10 GDC-15 GDC-26	Note 7*	[redacted]	2.8.5.4.5	N/A for BWR's
Spectrum of Rod Ejection Accidents	PWR EPUs	SRXB	[redacted]	15.4.8 Draft Rev. 3 April 1996	GDC-28	Note 7*	[redacted]	2.8.5.4.6	N/A for BWR's
Spectrum of Rod Drop Accidents	BWR EPUs	SRXB	[redacted]	15.4.9 Draft Rev. 3 April 1996	GDC-28	Note 7*	2.8.5.4.4	[redacted]	5.1.2, 9.2 VY NOTE
Inadvertent Operation of ECCS and Chemical and Volume Control System Malfunction that Increases Reactor Coolant Inventory	All EPUs	SRXB	[redacted]	15.5.1-2 Draft Rev. 2 April 1996	GDC-10 GDC-15 GDC-26	Note 7* Note 8*	2.8.5.5	2.8.5.5	9.1 VY NOTE

Areas of Review	Applicable to	Primary Review Branch	Secondary Review Branch(es)	SRP Section Number	Focus of SRP Usage	Other Guidance	Template Safety Evaluation Section Number		Cross – Reference to CPPU SAR/CPPU LTR
							BWR	PWR	
Inadvertent Opening of a PWR Pressurizer Pressure Relief Valve or a BWR Pressure Relief Valve	All EPUs	SRXB		15.6.1 Draft Rev. 2 April 1996	GDC-10 GDC-15 GDC-26	Note 7*	2.8.5.6.1	2.8.5.6.1	9.1 VY NOTE
Steam Generator Tube Rupture	PWR EPUs	SRXB		15.6.3 Draft Rev. 3 April 1996	Note 7*	Note 7*		2.8.5.6.2	N/A for BWR's
Loss-of Coolant Accidents Resulting from Spectrum of Postulated Piping Breaks within the Reactor Coolant Pressure Boundary	All EPUs	SRXB		15.6.5 Draft Rev. 3 April 1996	GDC-35 10 CFR 50.46	Note 7* Note 9*	2.8.5.6.2	2.8.5.6.3	4.3 VY NOTE
Anticipated Transient Without Scram	All EPUs	SRXB				Note 7* Note 10*	2.8.5.7	2.8.5.7	9.3
New Fuel Storage	EPU applications that request approval for new fuel design.	SRXB		9.1.1 Draft Rev. 3 April 1996	GDC-62		2.8.6.1	2.8.6.1	1.2.3, 2.1 VY NOTE
Spent Fuel Storage	EPU applications that request approval for new fuel design.	SRXB		9.1.2 Draft Rev. 4 April 1996	GDC-4 GDC-62		2.8.6.2	2.8.6.2	1.2.3, 2.1 VY NOTE

Notes:

1. When mixed cores (i.e., fuels of different designs) are used, the review covers the licensee's evaluation of the effects of mixed cores on design-basis accident and transient analyses.

2. The current acceptance criteria for fuel damage for reactivity insertion accidents (RIAs) need revision per Research Information Letter No. 174, "Interim Assessment of Criteria for Analyzing Reactivity Accidents at High Burnup." The Office of Nuclear Regulatory Research is conducting confirmatory research on RIAs and the Office of Nuclear Reactor Regulation is discussing the issue of fuel damage criteria with the nuclear power industry as part of the industry's proposal to increase future fuel burnup limits. In the interim, current methods for assessing fuel damage in RIAs are considered acceptable based on the NRC staff's understanding of actual fuel performance, as shown in three-dimensional kinetic calculations which indicate acceptably low fuel cladding enthalpy.

3. The review also covers core design changes and any effects on radial and bundle power distribution, including any changes in critical heat flux ratio and critical power ratio. The review will also confirm the adequacy of the flow-based average power range monitor flux trip and safety limit minimum critical power ratio at the uprated conditions.

4. The review also covers the determination of allowable power levels with inoperable main steam safety valves.

5. The review also covers the total time necessary to reach the shutdown cooling initiation temperature.
6. The review for BWRs will cover the justification for changes in calculated peak cladding temperature (PCT) for the design-basis case and the upper-bound case and any impact of the changes in PCTs on the use of the design methods for the power uprate.

7. The review:
   - confirms that the licensee used NRC-approved codes and methods for the plant-specific application and the licensee's use of the codes and methods complies with any limitations, restrictions, and conditions specified in the approving safety evaluation.
   - confirms that all changes of reactor protection system trip delays are correctly addressed and accounted for in the analyses.
   - (for PWRs) confirms that steam generator plugging and asymmetry limits are accounted for in the analyses.
   - (for PWRs) covers the licensee's evaluation of the effects of Westinghouse Nuclear Service Advisory Letters (NSALs), NSAL 02-3 and Revision 1, NSAL 02-4, and NSAL 02-5. These NSALs document problems with water level setpoint uncertainties in Westinghouse-designed steam generators. The review is conducted to ensure that the effects of the identified problems have been accounted for in steam generator water level setpoints used in LOCA, non-LOCA, and ATWS analyses.
8. For the inadvertent operation of emergency core cooling system and chemical and volume control system malfunctions that increase reactor coolant inventory events: (a) non-safety-grade pressure-operated relief valves should not be credited for event mitigation and (b) pressurizer level should not be allowed to reach a pressurizer water-solid condition.

9. The review also verifies that:
   - Licensee and vendor processes ensure LOCA analysis input values for PCT-sensitive parameters bound the as-operated plant values for those parameters
   - (For PWRs) The models and procedures continue to comply with 10 CFR 50.46 during the switchover from the refueling water storage tank to the containment sump (i.e., the core remains adequately cool during any flow reduction or interruption that may occur during switchover).
   - (For PWRs) Large-break LOCA analyses account for boric acid buildup during long-term core cooling and that the predicted time to initiate hot leg injection is consistent with the times in the operating procedures.
   - (For BWRs) The licensee's comparison of parameters used in the LOCA analysis with actual core design parameters provide the needed justification to confirm the applicability of the generic LOCA methodology.

10. The ATWS review is conducted to ensure that the plant meets the 10 CFR 50.62 requirements:

- For PWR plants with both a diverse scram system (DSS) and ATWS mitigation system actuation circuitry (AMSAC), the staff will not review ATWS for EPUs.
- For PWR plants where a DSS is not specifically required by 10 CFR 50.62, a review is conducted to verify that the consequences of an ATWS are acceptable. The acceptance criteria is that the peak primary system pressure should not exceed the ASME Service Level C limit of 3200 psig. The peak ATWS pressure is primarily a function of the moderator temperature coefficient and the primary system relief capacity.
- For BWR plants, the review is conducted to ensure that the licensee has appropriately accounted for changes in analyses due to the uprated power level and confirm that required equipment, such as the standby liquid control system (SLCS) pumps, can deliver required flowrates. The review will also cover the SLCS relief valve margin. In addition, a review is conducted to ensure that SLCS flow can be injected at the assumed time without lifting bypass relief valves during the limiting ATWS.

VERMONT YANKEE NOTES – MATRIX 8

SE 2.8.2 VY NOTE, Nuclear Design: Core design is performed on a cycle specific basis. Characteristics of specific core designs will be evaluated during the Reload Licensing Analysis.

SE 2.8.3 VY NOTE, Thermal and Hydraulic Design: Aspects of the thermal-hydraulic design are core/fuel design dependent. Therefore, these aspects will be evaluated during the Reload Licensing Analysis performed for the cycle in which power uprate is implemented.

SE 2.8.4.1 VY NOTE, Functional Design of Control Rod Drive System: Attachment 4 to the VYNPS CPPU submittal, Section 2.5, adequately describes the VYNPS evaluation of the Control Rod Drive System. This system has been generically dispositioned in Attachment 2 relative to scram time, CRD positioning, cooling and integrity. Neutronic design of the control rods is confirmed in the cycle reload analysis to ensure fuel design criteria are met. The VYNPS CRD system is adequately designed for CPPU conditions.

SE 2.8.4.3 VY NOTE, Reactor Core Isolation Cooling System: Attachment 4 to the VYNPS CPPU submittal, Section 3.9, describes the evaluation of the VYNPS RCIC system. System functional requirements have been generically dispositioned in Attachment 2 relative to NPSH and system performance. Details are described in Section 3.9. Section 9.1.3 "Loss of Feedwater" describes the CPPU evaluation of RCIC's design basis event. RCIC is adequately designed for CPPU operation.

SE 2.8.4.4 VY NOTE, Residual Heat Removal System: Attachment 4 to the VYNPS CPPU submittal, Section 3.10, provides an overall description of the RHR analysis, in particular the modes in which RHR is required to operate. The CPPU evaluations of RHR considered the additional decay heat removal requirements in LPCI, containment spray and suppression pool cooling, shutdown cooling and fuel pool cooling assist modes. The CPPU LPCI evaluation is contained in Attachment 4 to the VYNPS CPPU submittal, Section 4.2.4. The suppression pool cooling and containment spray evaluation is contained in Attachment 4 to the VYNPS CPPU submittal, Section 4.1. Fuel pool cooling assist as it relates to various combinations and single failure scenarios required for spent fuel pool cooling is contained in Section 6.3.1. Analysis for shutdown cooling considered CPPU decay heat and RHR design parameters such as heat exchanger design, fouling and plugging, pump capacity and service water flow and temperature. All cited analyses conclude RHR will adequately provide cooling to the reactor and spent fuel pool at CPPU conditions.

VERMONT YANKEE NOTES – MATRIX 8 (cont.)

SE 2.8.4.5 VY NOTE, Standby Liquid Control System: The plant-specific dispositions address RS-001 Section 2.8.4.5 in the sense that RS-001 is focused on the effect of CPPU on the functional capability of the SLCS to deliver the required amount of boron solution to the reactor. There are no design changes required to the SLCS for CPPU. The SLCS continues to meet all applicable design criteria.

SE 2.8.5.1 VY NOTE, Decrease in Feedwater Temperature, Increase in Feedwater Flow, Increase in Steam Flow, and Inadvertent Opening of a Main Steam Relief or Safety Valve: NEDC-33004P-A, Revision 4 (CLTR), Section 9 and the response to CLTR NRC RAI set 9 Number 14 RXSB (contained in pages A-77 through A-85 of the CLTR) provide the disposition of the Anticipated Operational Occurrences (AOOs) for CPPU. This disposition was agreed to by the NRC staff in the SE for NEDC-33004P-A.

Decrease in Feedwater Temperature limiting events [[
]] and Increase in Feedwater Flow limiting event [[
]] are confirmed to be within the VYNPS reload evaluation scope. [[

-]]

b) Increase in Steam Flow event [[ ]]) is [[ ]] within the reload evaluation scope. [[

]]

c) Inadvertent Opening of a Safety Valve is [[

]]

VERMONT YANKEE NOTES – MATRIX 8 (cont.)

SE 2.8.5.2.1 VY NOTE, Loss of External Load; Turbine Trip; Loss of Condenser Vacuum; Closure of Main Steam Isolation Valve; and Steam Pressure Regulator Failure (Closed): NEDC-33004P-A, Revision 4 (CLTR), Section 9 and the response to CLTR NRC RAI set 9 Number 14 RXSB (contained in pages A-77 through A-85 of the CLTR) provide the disposition of the Anticipated Operational Occurrences (AOOs) for CPPU. This disposition was agreed to by the NRC staff in the SE for NEDC-33004P-A.

a) Closure of Main Steam Isolation valves with failure of direct Scram (MSIVF) is evaluated in Section 3.1 Attachment 4 of the VYNPS CPPU submittal. This event is also confirmed as evaluated during the VYNPS reload evaluation scope.

b) Loss of External Load limiting event (Generator Load Rejection with Steam Bypass Failure (LRNBP)) and Turbine Trip limiting event (Turbine Trip with Steam Bypass Failure (TTNBP)) are confirmed to be within the VYNPS reload evaluation scope. [[

-]]

c) Pressure Regulator failure closed (Pressure Regulator Failure Downscale (PRFD) is [[ ]]. (See Table 3, item 4 of the response to NRC RAI Set 9 Number 14 RSXB contained in NEDC-33004P-A, Revision 4 (CLTR).)

d) For all BWRs, the Loss of Condenser Vacuum (LOCV) event is [[

]]

VERMONT YANKEE NOTES – MATRIX 8 (cont.)

SE 2.8.5.2.2 VY NOTE, Loss of Nonemergency AC Power to the Station Auxiliaries: NEDC-33004P-A, Revision 4 (CLTR), Section 9 and the response to CLTR NRC RAI set 9 Number 14 RXSB (contained in pages A-77 through A-85 of the CLTR) provide the disposition of the Anticipated Operational Occurrences (AOOs) for CPPU. This disposition was agreed to by the NRC staff in the SE for NEDC-33004P-A.

a) Loss of Non-emergency AC power to the Station Auxiliaries is [[

]]

SE 2.8.5.3.1 VY NOTE, Loss of Forced Reactor Coolant Flow: NEDC-33004P-A, Revision 4 (CLTR), Section 9 and the response to CLTR NRC RAI set 9 Number 14 RXSB (contained in pages A-77 through A-85 of the CLTR) provide the disposition of the Anticipated Operational Occurrences (AOOs) for CPPU.

a) This disposition was agreed to by the NRC staff in the SE for NEDC-33004P-A.Loss of Forced Reactor Coolant Flow Including Trip of Pump Motor and Flow Controller Malfunctions are events that result in a decrease in reactor core coolant flow rate. Events in this category are [[

]] (See Table 2 of the response to NRC RAI Set 9 Number 14 RSXB contained in NEDC-33004P-A, Revision 4 (CLTR).)

SE 2.8.5.3.2 VY NOTE, Reactor Recirculation Pump Rotor Seizure and Reactor Recirculation Pump Shaft Break: NEDC-33004P-A, Revision 4 (CLTR), Section 9 and the response to CLTR NRC RAI set 9 Number 14 RXSB (contained in pages A-77 through A-85 of the CLTR) provide the disposition of the Anticipated Operational Occurrences (AOOs) for CPPU. This disposition was agreed to by the NRC staff in the SE for NEDC-33004P-A.

a) Reactor Coolant Pump Rotor Seizure and Reactor Coolant Pump Shaft Break are events that result in a decrease in reactor core coolant flow rate. Events in this category, [[

]] (See Table 2 of the response to NRC RAI Set 9 Number 14 RSXB contained in NEDC-33004P-A, Revision 4 (CLTR)).

VERMONT YANKEE NOTES – MATRIX 8 (cont.)

SE 2.8.5.4.1 VY NOTE, Uncontrolled Control Rod Assembly Withdrawal from a Subcritical or Low Power Startup Condition: The CPPU evaluation of Uncontrolled Control Rod Assembly Withdrawal from a subcritical or Low Power Startup Condition for VYNPS is a comparison of the expected maximum increase in peak fuel enthalpy with a 20% CPPU with the acceptance criterion of 170 cal/gram. The CLTP Rod Withdrawal Error (RWE) analysis for VYNPS is based on GE report, "Continuous Control Rod Withdrawal Transient in the Startup Range," NEDO-23842, April 1978. The VYNPS CPPU core consists solely of GE fuel assemblies and the CPPU is limited to 120% of original licensed thermal power. In addition, there is no change to the VYNPS reactor manual control system or control rod hydraulic control units for CPPU. As stated in Section 5.1.2 of Attachment 4 to the VYNPS power uprate submittal, [[

]] No change in peak fuel enthalpy is expected due to CPPU because an RWE is a localized low-power event. If the peak fuel rod enthalpy is conservatively increased by a factor of 1.2, the RWE peak fuel enthalpy at CPPU will be 72 cal/gram. This enthalpy is well below the acceptance criterion of 170 cal/gram.

SE 2.8.5.4.2 VY NOTE, Uncontrolled Control Rod Assembly Withdrawal at Power: NEDC-33004P-A, Revision 4 (CLTR), Section 9 and the response to CLTR NRC RAI set 9 Number 14 RXSB (contained in pages A-77 through A-85 of the CLTR) provide the disposition of the Anticipated Operational Occurrences (AOOs) for CPPU. This disposition was agreed to by the NRC staff in the SE for NEDC-33004P-A.

Control Rod Withdrawal Error at Power is confirmed to be within the VYNPS reload evaluation scope. [[

]]

VERMONT YANKEE NOTES – MATRIX 8 (cont.)

SE 2.8.5.4.3 VY NOTE, Startup of a Recirculation Loop at an Incorrect Temperature and Flow Controller Malfunction Causing an Increase in Core Flow Rate: NEDC-33004P-A, Revision 4 (CLTR), Section 9 and the response to CLTR NRC RAI set 9 Number 14 RXSB (contained in pages A-77 through A-85 of the CLTR) provide the disposition of the Anticipated Operational Occurrences (AOOs) for CPPU. This disposition was agreed to by the NRC staff in the SE for NEDC-33004P-A.

a) Failure of the recirculation flow controller can result in either a slow or fast recirculation increase. The disposition of these events for CPPU (See Table 3, items 8 and 9 of the response to NRC RAI Set 9 Number 14 RSXB contained in NEDC-33004P-A, Revision 4 (CLTR)) indicates that [[

]]

b) Startup of an idle recirculation pump is [[

]]

SE 2.8.5.4.4 VY NOTE, Spectrum of Rod Drop Accidents: The spectrum of Control Rod Drop Accidents (CRDAs) does not change with CPPU. The non-radiological evaluation of a CRDA for the VYNPS CPPU is a comparison of the expected maximum increase in peak fuel enthalpy with 20% CPPU against the acceptance criterion of 280 cal/gram. The CLTP CRDA for VYNPS is based on GE report, "Banked Position Withdrawal Sequence," NEDO-21231, January 1977. The VYNPS CPPU core consists solely of GE fuel assemblies and the CPPU is limited to 120% of original licensed thermal power. Control rod sequencing at VYNPS for CLTP and CPPU follows the Banked Position Withdrawal Sequence (BPWS). There is also no change to VYNPS reactor manual control system or control rod hydraulic control units for CPPU. As stated in Section 5.1.2 of Attachment 4 to the VYNPS power uprate submittal, [[

VERMONT YANKEE NOTES – MATRIX 8 (cont.)

]] No change in peak fuel enthalpy is expected due to CPPU because CPPU by itself does not increase peak fuel enthalpy for this localized low-power event. However, indirectly, CPPU fuel and core designs can lead to higher rod worth and therefore higher peak fuel enthalpy at low power. If the peak fuel rod enthalpy is conservatively increased by a factor of 1.2, the CRDA peak fuel enthalpy at CPPU will be 162 cal/gram. This enthalpy is well below the acceptance criterion of 280 cal/gram. Radiological aspects of the CRDA are contained in Section 9.2 of Attachment 4 to the VYNPS CPPU submittal.

SE 2.8.5.5 VY NOTE, Inadvertent Operation of ECCS or Malfunction that Increases Reactor Coolant Inventory: NEDC-33004P-A, Revision 4 (CLTR), Section 9 and the response to CLTR NRC RAI set 9 Number 14 RXSB (contained in pages A-77 through A-85 of the CLTR) provide the disposition of the Anticipated Operational Occurrences (AOOs) for CPPU. This disposition was agreed to by the NRC staff in the SE for NEDC-33004P-A.

a) The limiting event, [[ ]], is confirmed to be within the VYNPS reload evaluation scope. [[

-]]

SE 2.8.5.6.1 VY NOTE, Inadvertent Opening of a Pressure Relief Valve: NEDC-33004P-A, Revision 4 (CLTR), Section 9 and the response to CLTR NRC RAI set 9 Number 14 RXSB (contained in pages A-77 through A-85 of the CLTR) provide the disposition of the Anticipated Operational Occurrences (AOOs) for CPPU. This disposition was agreed to by the NRC staff in the SE for NEDC-33004P-A.

a) Inadvertent Opening of a Safety Valve is [[

]]

VERMONT YANKEE NOTES – MATRIX 8 (cont.)

SE 2.8.5.6.2 VY NOTE, LOCA's resulting from Spectrum of Postulated Piping Breaks within the RCPB: The VYNPS CPPU LOCA analyses are based on NRC-approved GE LOCA analysis methods and are in full compliance with 10CFR50.46. No new fuel designs are being introduced. No ECCS changes are required to meet LOCA analysis acceptance criteria.

SE 2.8.6.1 VY NOTE, New Fuel Storage: RS-001 Matrix 8 states that this review criterion is applicable to EPU's for which new fuel design approval is requested. VYNPS has previously implemented GE-14 new fuel design and is not requesting approval of new fuel design with the CPPU license amendment request.

SE 2.8.6.2 VY NOTE, Spent Fuel Storage: RS-001 Matrix 8 states that this review criterion is applicable to EPU's for which new fuel design approval is requested. VYNPS has previously implemented GE-14 new fuel design and is not requesting approval of new fuel design with the CPPU license amendment request.

NON-PROPRIETARY INFORMATION

MATRIX 9

SCOPE AND ASSOCIATED TECHNICAL REVIEW GUIDANCE

Source Terms and Radiological Consequences Analyses

Areas of Review	Applicable to	Primary Review Branch	Secondary Review Branch(es)	SRP Section Number	Focus of SRP Usage	Other Guidance	Template Safety Evaluation Section Number		Cross – Reference to CPPU SAR/CPPU LTR
							BWR	PWR	
Source Terms for Input into Radwaste Management Systems Analyses	All EPUs	SPSB		11.1 Draft Rev. 3 April 1996	10 CFR Part 20 10 CFR Part 50, App. I GDC-60		2.9.1	2.9.1	8.4
Radiological Consequence Analyses Using Alternative Source Terms	EPUs that utilize alternative source term	SPSB	EEIB EMCB EMEB IEPB SPLB SRXB	15.0.1 Rev. 0 July 2000	10 CFR 50.67 GDC-19 10 CFR 50.49 10 CFR Part 51 10 CFR Part 50, App. E NUREG-0737		2.9.2	2.9.2	9.2 VY NOTE
Radiological Consequences of Main Steamline Failures Outside Containment for a PWR	PWR EPUs that do not utilize alternative source term whose main steamline break analyses result in fuel failure	SPSB	SRXB	15.1.5, App. A Draft Rev. 3 April 1996	10 CFR Part 100	Notes 4, 5, 6, 7, 27*		2.9.2	N/A for BWR's
				6.4 Draft Rev. 3 April 1996	GDC-19	Notes 1, 2, 3, 28, 29*			

Areas of Review	Applicable to	Primary Review Branch	Secondary Review Branch(es)	SRP Section Number	Focus of SRP Usage	Other Guidance	Template Safety Evaluation Section Number		Cross – Reference to CPPU SAR/CPPU LTR
							BWR	PWR	
Radiological Consequences of Reactor Coolant Pump Rotor Seizure and Reactor Coolant Pump Shaft Break	EPUs that do not utilize alternative source term whose reactor coolant pump rotor seizure or reactor coolant pump shaft break results in fuel failure	SPSB	SRXB	15.3.3-4 Draft Rev. 3 April 1996	10 CFR Part 100	Notes 5, 8, 9, 27*		2.9.3	N/A for BWR's
				6.4 Draft Rev. 3 April 1996	GDC-19	Notes 1, 2, 3, 28, 29*			
Radiological Consequences of a Control Rod Ejection Accident	PWR EPUs that do not utilize alternative source term whose rod ejection accident results in fuel failure or melting	SPSB	SRXB	15.4.8, App. A Draft Rev. 2 April 1996	10 CFR Part 100	Notes 4, 21, 22, 27*		2.9.4	N/A for BWR's
				6.4 Draft Rev. 3 April 1996	GDC-19	Notes 1, 2, 3, 28, 29*			
Radiological Consequences of Control Rod Drop Accident	BWR EPUs that do not utilize alternative source term whose control rod drop accident results in fuel failure or melting	SPSB	SRXB	15.4.9, App. A Draft Rev. 3 April 1996	10 CFR Part 100	Notes 9, 10, 27*	2.9.2		9.2 VY NOTE
				6.4 Draft Rev. 3 April 1996	GDC-19	Notes 1, 2, 3, 28, 29*			
Radiological Consequences of the Failure of Small Lines Carrying Primary Coolant Outside Containment	EPUs that do not utilize alternative source term whose failure of small lines carrying primary coolant outside containment result in fuel failure	SPSB		15.6.2 Draft Rev. 3 April 1996	GDC-55 10 CFR Part 100		2.9.3	2.9.5	9.2 VY NOTE
				6.4 Draft Rev. 3 April 1996	GDC-19	Notes 1, 2, 3, 28, 29*			

Areas of Review	Applicable to	Primary Review Branch	Secondary Review Branch(es)	SRP Section Number	Focus of SRP Usage	Other Guidance	Template Safety Evaluation Section Number		Cross – Reference to CPPU SAR/CPPU LTR
							BWR	PWR	
Radiological Consequences of Steam Generator Tube Failure	PWR EPUs that do not utilize alternative source term whose steam generator tube failure results in fuel failure	SPSB	SRXB	15.6.3 Draft Rev. 3 April 1996	10 CFR Part 100	Notes 4, 13, 14, 15, 27*		2.9.6	N/A for BWR's
				6.4 Draft Rev. 3 April 1996	GDC-19	Notes 1, 2, 3, 28, 29*			
Radiological Consequences of Main Steamline Failure Outside Containment for a BWR	BWR EPUs that do not utilize alternative source term whose main steam line failure outside containment results in fuel failure	SPSB	SRXB	15.6.4 Draft Rev. 3 April 1996	10 CFR Part 100	Note 27*	2.9.4		9.2 VY NOTE
				6.4 Draft Rev. 3 April 1996	GDC-19	Notes 1, 2, 3, 28, 29*			
Radiological Consequences of a Design Basis Loss-Of-Coolant-Accident Including Containment Leakage Contribution	EPUs that do not utilize alternative source term	SPSB	SPLB	15.6.5, App. A Draft Rev. 2 April 1996	10 CFR Part 100	Notes 4, 23, 24, 25, 26, 27*	2.9.5	2.9.7	9.2 VY NOTE
				6.4 Draft Rev. 3 April 1996	GDC-19	Notes 1, 2, 3, 28, 29*			
Radiological Consequences of a Design Basis Loss-Of-Coolant-Accident: Leakage from ESF Components Outside Containment	EPUs that do not utilize alternative source term	SPSB	SPLB	15.6.5, App. B Draft Rev. 2 April 1996	10 CFR Part 100	Notes 11, 27*	2.9.5	2.9.7	9.2 VY NOTE
				6.4 Draft Rev. 3 April 1996	GDC-19	Notes 1, 2, 3, 28, 29*			

Areas of Review	Applicable to	Primary Review Branch	Secondary Review Branch(es)	SRP Section Number	Focus of SRP Usage	Other Guidance	Template Safety Evaluation Section Number		Cross – Reference to CPPU SAR/CPPU LTR
							BWR	PWR	
Radiological Consequences of a Design Basis Loss-Of-Coolant-Accident: Leakage from Main Steam Isolation Valves	BWR EPUs that do not utilize alternative source term	SPSB		15.6.5, App. D Draft Rev. 2 April 1996	10 CFR Part 100	Notes 9, 12, 27*	2.9.5		9.2 VY NOTE
				6.4 Draft Rev. 3 April 1996	GDC-19	Notes 1, 2, 3, 28, 29*			
Radiological Consequences of Fuel Handling Accidents	EPUs that do not utilize alternative source term	SPSB	SPLB	15.7.4 Draft Rev. 2 April 1996	10 CFR Part 100 GDC-61	Notes 4, 5, 18, 19, 20, 27*	2.9.6	2.9.8	9.2 VY NOTE
				6.4 Draft Rev. 3 April 1996	GDC-19	Notes 1, 2, 3, 28, 29*			
Radiological Consequences of Spent Fuel Cask Drop Accidents	EPUs that do not utilize alternative source term	SPSB	EMEB SPLB	15.7.5 Draft Rev. 3 April 1996	10 CFR Part 100 GDC-61	Notes, 5, 16, 17, 8, 18, 27*	2.9.7	2.9.9	9.2 VY NOTE
				6.4 Draft Rev. 3 April 1996	GDC-19	Notes 1, 2, 3, 28, 29*			

Notes:

1. In addition to SRP Section 15.6.5, Appendices A, B, and D, dose consequences in the control room are determined from design-basis accidents as part of the review for SRP Sections 15.0.1; 15.1.5, Appendix A; 15.3.3-4, 15.4.8, Appendix A; 15.4.9, Appendix A; 15.6.2, 15.6.3, 15.6.4, 15.7.4, and 15.7.5.

2. Regulatory Guide 1.95 was canceled. Relevant guidance from Regulatory Guide 1.95 was incorporated into Regulatory Guide 1.78, Revision 1 in January 2002. Therefore, Regulatory Guide 1.95 should not be used.

3. Table 6.4-1, attached to SRP Section 6.4 and referred to in Item 7, "Independent Analyses," of the "Review Procedures" Section of SRP Section 6.4 may not be used.

4. Acceptable dose conversion factors may be taken from Table 2.1 of Federal Guidance Report 11, "Limiting Values of Radionuclide Intake and Air Concentration and Dose Conversion Factors for Inhalation, Submersion, and Ingestion," Environmental Protection Agency, 1988; and Table III.1 of Federal Guidance Report 12, " External Exposure to Radionuclides in Air, Water, and Soil," Environmental Protection Agency, 1993.

5. NUREG-1465 should not be used.

6. For the review of the main steamline failure accident, review of facilities licensed with, or applying for, alternative repair criteria (ARC) should use SRP Section 15.1.5, Appendix A, in conjunction with the guidance in Draft Regulatory Guide DG-1074, "Steam Generator Tube Integrity," December 1998, for acceptable assumptions and methodologies for performing radiological analyses.

7. For facilities that implement ARC, the primary-to-secondary leak rate in the faulted generator should be assumed to be the maximum accident-induced leakage derived from the repair criteria and burst correlations. The leak rate limiting condition for operation specified in the technical specifications is equally apportioned among the unaffected steam generators.

8. Guidance for the radiological consequences analyses review with respect to acceptable modeling of the radioactivity transport is given in SRP Section 15.6.3, "Radiological Consequences of Steam Generator Tube Failure (PWR)," for applicants that use the traditional source term, based on TID-14844.

9. References to specific computer codes (e.g., SARA, TACT, Pipe Model) are not necessary since other computer codes/methods may be used.

10. In the second paragraph of Section III, "Review Procedure," it is stated that the control rod drop accident is expected to result in radiological consequences less than 10 percent of the 10 CFR Part 100 guideline values, even with conservative assumptions. The value of 10 percent should be replaced with 25 percent.

11. In Section III, "Review Procedures," the guidance in the fourth paragraph, which deals with passive failures, should not be used.

12. The last paragraph on page 15.6.5-4 refers to a "code" developed by J. E. Cline and Associates, Inc. This is identified as Reference 5 in the paragraph. The word "code" should be changed to "model" because the staff does not have the computer code. In addition, the correct reference to the work by J. E. Cline and Associates, Inc., is 4.

13. Item 4 of the "Review Interfaces" section should be deleted. SPSB review of the steam generator tube rupture accidents for their contribution to plant risk is not currently used in the design-basis accident review for radiological consequences.

14. The reference to Figure 3.4-1 of the Nuclear Steam Supply System vendor Standard Technical Specification in Item 6.(a) of Section III, "Review Procedures," does not apply. In addition, the primary coolant iodine concentration discussed in this Item is the 48-hour maximum value.

15. In Item 6.(b) of Section III, "Review Procedures," the multiplier of 500 used for estimating the increase in iodine release rate is reduced to 335 as a result of the staff's review of iodine release rate data collected by Adams and Atwood.

16. The reference to SRP Section 9.1.4 in Item 2.c of the "Review Interfaces" section should be changed to SRP Section 9.1.5.

17. The reference to Regulatory Guide 1.25, which was deleted in 1996, should be retained, with exceptions as noted below in Note 18.

18. The following exceptions to Regulatory Guide 1.25 are provided. These exceptions are based on the staff's review of NUREG/CR-6703.

    The fraction of the core inventory assumed to be in the gap for the various nuclides are given in the table below. The release fractions from the table are used in conjunction with the calculated fission product inventory and the maximum core radial peaking factor. These release fractions have been determined to be acceptable for use with currently approved LWR fuel with a peak burnup up to 62,000 MWD/MTU, provided that the maximum linear heat generation rate will not exceed 6.3 kW/ft peak rod average power for rods with burnups that exceed 54 GWD/MTU. As an alternative, fission gas release calculations using NRC-approved methodologies may be considered on a case-by-case basis.

NON-LOCA FRACTION OF FISSION PRODUCT INVENTORY IN GAP	
GROUP	FRACTION
I-131	0.08
Kr-85	0.10
Other Noble Gases	0.05
Other Iodines	0.05

19. References to the Standard Technical Specifications should be replaced with references to the plant-specific technical specifications or technical requirements manual (TRM).

20. Technical Specification Task Force (TSTF) Traveler TSTF-51 proposed to add the term "recently," as it applies to irradiated fuel, to the applicability section of certain technical specifications. The proposed change is intended to remove certain technical specifications requirements for operability of ESF systems (e.g., secondary containment isolation and filtration systems) during refueling. The associated technical specifications bases define "recently," as it applies to irradiated fuel, as the minimum decay time used in supporting radiological consequences analyses of fuel handling accidents. Radiological consequences analyses for these applicants should generally assume a 2-hour release directly to the environment, without holdup or mitigation by ESF systems and no credit for containment closure. Additionally, licensees adding the term "recently" must make a commitment for a single normal or contingency method to promptly close primary or secondary containment penetrations. Such prompt methods need not completely block the penetration or be capable of resisting pressure. The review of this commitment and the prompt methods should be coordinated with IORB, SPLB, and IEPB.

21. In the last sentence of Item 2 of the "Review Interfaces" section, the reference to the number of fuel pins experiencing departure from nucleate boiling (DNB) should be deleted. The reference to fuel clad melting should be used and is therefore retained.

22. In Item 2 of the "Review Procedures" section, the references to the "number of fuel pins reaching DNB" should be deleted and replaced with "the number of fuel pins with cladding failure." In addition, the use of a conservative value of 10 percent for fuel cladding failure in the calculation of the radiological consequences of the rod ejection accident is acceptable.

23. In Item 1 of the "Areas of Review" section, the use of the word "established" is incorrect. The word "established" should be replaced with the word "assessed."

24. In Item 1 of the "Acceptance Criteria" section, the following text in the last line should be deleted: "3.0 Sv (300 rem) to the thyroid and 0.25 Sv (25 rem) to the whole body."

25. In Item 1 of the "Review Procedures" section, the following should be added after the first sentence:

    Appendix K to 10 CFR Part 50 defines conservative analysis assumptions for evaluation of ECCS performance during design-basis LOCAs. Appendix K requires the licensees to assume that the reactor has been operating continuously at a power level at least 1.02 times the licensed power level to allow for instrumentation error. Appendix K allows for an assumed power level less than 1.02 times the licensed power level but not less than the licensed power level, provided the alternative value has been demonstrated to account for uncertainties due to power level instrumentation error.

26. In Item 2 of the "Review Procedures" section, the following statements should be deleted:

    "A check is made of the LOCA [loss-of-coolant accident] assumptions listed in Chapter 15 of the SAR to verify that the primary containment leakage rate has been assumed to remain constant over the course of the accident for a BWR and to remain constant at one half of the initial leak rate after 24 hours for a PWR."

    "The leakage rate used should correspond to that given in the technical specification."

    The above statements should be replaced with the following:

    "A check is made of the LOCA assumptions listed in Chapter 15 of the SAR to verify acceptable primary containment leakage assumptions. The primary containment should be assumed to leak at the peak pressure technical specification leak rate for the first 24 hours. For PWRs, the leakage rate may be reduced after the first 24 hours to 50 percent of the TS leak rate. For BWRs, leakage may be reduced after the first 24 hours, if supported by plant configuration and analyses, to a value not less than 50 percent of the TS leak rate. Leakage from subatmospheric containments is assumed to terminate when the containment is brought to and maintained at a subatmospheric condition, as defined by the TSs."

27. The staff has drafted updated guidance on performing design-basis radiological analyses in draft Regulatory Guide DG-1113, "Methods and Assumptions for Evaluating Radiological Consequences of Design Basis Accidents at Light-Water Nuclear Power Reactors," issued for public comment January 2002. The resulting final regulatory guide may be used for guidance on review of design-basis accident non-alternative source term radiological analyses after the date of issuance of the final regulatory guide.

28. In Section II, "Acceptance Criteria," the discussion for Item C related to GDC-19 should be supplemented with

    "and providing a suitably controlled environment for the control room operators and the equipment located therein."

29. In Section II, Item 2, "Ventilation System Criteria," the discussion related to review of the control room area ventilation system under SRP Section 9.4.1 should be retained.

VERMONT YANKEE NOTES – MATRIX 9

SE 2.9.2 VY NOTE, Radiological Consequence Analyses Using Alternative Source Terms: RS-001 Section 2.9.2 specifies review criteria for licensees implementing an Alternative Source Term for the first time. VYNPS previously submitted an Alternative Source Term license amendment request, which addresses these review criteria.

SE 2.9.2 VY NOTE, Radiological Consequences of Control Rod Drop Accident: RS-001 Matrix 9 states that this review criterion is applicable to EPU's that do not utilize alternative source term. VYNPS previously submitted an Alternative Source Term license amendment request.

SE 2.9.3 VY NOTE, Radiological Consequences of the Failure of Small Lines Carrying Primary Coolant Outside Containment: RS-001 Matrix 9 states that this review criterion is applicable to EPU's that do not utilize alternative source term. VYNPS previously submitted an Alternative Source Term license amendment request.

SE 2.9.4 VY NOTE, Radiological Consequences of Main Steamline Failure Outside Containment for a BWR: RS-001 Matrix 9 states that this review criterion is applicable to EPU's that do not utilize alternative source term. VYNPS previously submitted an Alternative Source Term license amendment request.

SE 2.9.5 VY NOTE, Radiological Consequences of a Design Basis Loss-Of-Coolant Accident Including Containment Leakage Contribution: RS-001 Matrix 9 states that this review criterion is applicable to EPU's that do not utilize alternative source term. VYNPS previously submitted an Alternative Source Term license amendment request.

SE 2.9.5 VY NOTE, Radiological Consequences of a Design Basis Loss-Of-Coolant Accident: Leakage from ESF Components Outside Containment: RS-001 Matrix 9 states that this review criterion is applicable to EPU's that do not utilize alternative source term. VYNPS previously submitted an Alternative Source Term license amendment request.

SE 2.9.5 VY NOTE, Radiological Consequences of a Design Basis Loss-Of-Coolant Accident: Leakage from Main Steam Isolation Valves: RS-001 Matrix 9 states that this review criterion is applicable to EPU's that do not utilize alternative source term. VYNPS previously submitted an Alternative Source Term license amendment request.

SE 2.9.6 VY NOTE, Radiological Consequences of Fuel Handling Accidents: RS-001 Matrix 9 states that this review criterion is applicable to EPU's that do not utilize alternative source term. VYNPS previously submitted an Alternative Source Term license amendment request.

VERMONT YANKEE NOTES – MATRIX 9 (cont.)

SE 2.9.7 VY NOTE, Radiological Consequences of Spent Fuel Cask Drop: RS-001 Matrix 9 states that this review criterion is applicable to EPU's that do not utilize alternative source term. VYNPS previously submitted an Alternative Source Term license amendment request.

MATRIX 10

SCOPE AND ASSOCIATED TECHNICAL REVIEW GUIDANCE

Health Physics

Areas of Review	Applicable to	Primary Review Branch	Secondary Review Branch(es)	SRP Section Number	Focus of SRP Usage	Other Guidance	Template Safety Evaluation Section Number		Cross – Reference to CPPU SAR/CPPU LTR
							BWR	PWR	
Radiation Sources	All EPUs	IEPB	[redacted]	12.2 Draft Rev. 3 April 1996	10 CFR Part 20	[redacted]	2.10.1	2.10.1	8.3, 8.4 VY NOTE
Radiation Protection Design Features	All EPUs	IEPB	[redacted]	12.3-4 Draft Rev. 3 April 1996	10 CFR Part 20 GDC-19	Note 1*	2.10.1	2.10.1	8.5 VY NOTE
Operational Radiation Protection Program	All EPUs	IEPB	[redacted]	12.5 Draft Rev. 3 April 1996	10 CFR Part 20	Note 2* Note 3*	2.10.1	2.10.1	8.5 VY NOTE

Notes:

1. Regulatory Guide 8.12, "Criticality Accident Alarm Systems" has been withdrawn and should not be used.
2. Regulatory Guide 8.3, "Film Badge Performance Criteria" has been withdrawn and should not be used.
3. Regulatory Guide 8.14, "Personnel Neutron Dosimeters" has been withdrawn and should not be used.

VERMONT YANKEE NOTE – MATRIX 10

SE 2.10.1 VY NOTE, Radiation Sources, Radiation Protection Features, Operational Radiation Protection Program: See comments related to RS Section 2.9.1, and responses to the following NRC RAIs:

- IEPB B1
- IEPB B2
- IEPB B3
- IEPB B4
- IEPB B5
- IEPB B6

MATRIX 11

SCOPE AND ASSOCIATED TECHNICAL REVIEW GUIDANCE

Human Performance

Areas of Review	Applicable to	Primary Review Branch	Secondary Review Branch(es)	SRP Section Number	Focus of SRP Usage	Other Guidance	Template Safety Evaluation Section Number		Cross – Reference to CPPU SAR/CPPU LTR
							BWR	PWR	
Reactor Operator Training	All EPUs	IROB		13.2.1* Draft Rev. 2 Dec. 2002	Specific review questions are provided in the template safety evaluations.		2.11	2.11	10.6
Training for Non-Licensed Plant Staff	All EPUs	IROB		13.2.2* Draft Rev. 2 Dec. 2002	Specific review questions are provided in the template safety evaluations.		2.11	2.11	10.6
Operating and Emergency Operating Procedures	All EPUs	IROB	SPLB SPSB SRXB	13.5.2.1* Draft Rev. 1 Dec. 2002	Specific review questions are provided in the template safety evaluations.		2.11	2.11	10.9
Human Factors Engineering	All EPUs	IROB		18.0** Draft Rev. 0 April 1996	Specific review questions are provided in the template safety evaluations.		2.11	2.11	10.6

*The staff is currently finalizing SRP Sections 13.2.1, 13.2.2, and 13.5.2.1. While these SRP Sections are being finalized, the staff will continue to use the versions issued in December 2002 for interim use and public comment. Once finalized, the staff will use the new versions of these SRP Sections.

**The staff received significant comment on draft SRP Chapter 18.0 that was issued in December 2002 for interim use and public comment. The staff is working on finalizing this SRP. However, due to the significance of the comments received, the staff will use Draft SRP Chapter 18.0, Revision 0, dated April 1996.

MATRIX 12

SCOPE AND ASSOCIATED TECHNICAL REVIEW GUIDANCE

Power Ascension and Testing Plan

Areas of Review	Applicable to	Primary Review Branch	Secondary Review Branch(es)	SRP Section Number	Focus of SRP Usage	Other Guidance	Template Safety Evaluation Section Number		Cross – Reference to CPPU SAR/CPPU LTR
							BWR	PWR	
Power Ascension and Testing	All EPUs	IEPB	EEIB EMCB EMEB IROB SPLB SPSB SRXB	14.2.1* Draft Rev. 0 Dec. 2002	Entire Section		2.12	2.12	10.4

*The staff is currently finalizing SRP Section 14.2.1. While this SRP Section is being finalized, the staff will continue to use the version issued for interim use and public comment in December 2002. Once finalized, the staff will use the new version.

MATRIX 13

SCOPE AND ASSOCIATED TECHNICAL REVIEW GUIDANCE

Risk Evaluation

Areas of Review	Applicable to	Primary Review Branch	Secondary Review Branch(es)	SRP Section Number	Focus of SRP Usage	Other Guidance	Template Safety Evaluation Section Number		Cross – Reference to CPPU SAR/CPPU LTR
							BWR	PWR	
Risk Evaluation	All EPUs	SPSB	[redacted]	[redacted]	[redacted]	Note 1* RG 1.174 RIS 2001-02	2.13	2.13	10.5

Notes:

1. The staff's review is based on Attachment 1 to this matrix. Attachment 1 invokes SRP Chapter 19, Appendix D, if special circumstances are identified during the review.

Docket No. 50-271
BVY 04-009

Attachment 8

Vermont Yankee Nuclear Power Station

Proposed Technical Specification Change No. 263

Supplement No. 4

Extended Power Uprate – NRC Acceptance Review

Steam Dryer Issues

NON-PROPRIETARY VERSION

ITEM 3 – STEAM DRYER INTEGRITY

(italicized text is from NRC letter of December 15, 2003)

As discussed in a public meeting at NRC Headquarters on October 30, 2003, Entergy stated that a supplement would be provided in the near future regarding steam dryer integrity. This information is needed by the NRC staff before the application is considered complete. Since steam dryer integrity is an emerging industry issue, you should consider if any new developments on this issue impact the VYNPS submittal and provide further supplements as deemed necessary.

VY RESPONSE

VY stated in its EPU submittal of September 10, 2003 (BVY 03-80) that 'VY is actively assessing emergent BWR steam dryer issues together with the industry and NRC staff as they may relate to EPU. As discussed in PUSAR Section 3.4.2 VY has performed a qualitative evaluation of its steam dryer and has identified certain modifications and inspections to ensure dryer structural integrity at EPU conditions. VY also expects to appropriately implement recommendations in a revision to a GE Service Information Letter addressing steam dryer issues.'

VY has applied significant engineering resources and continued to aggressively pursue steam dryer evaluations. These activities have included interactions with the staffs at operating plants that have been directly affected by steam dryer issues, as well as with GENE. Industry initiatives have placed emphasis on steam dryer integrity through BWR Owners Group efforts and high priority BWR Vessel Internals Project (BWRVIP) attention.

During the meeting between VY, GENE and the NRC on October 30, 2003, VY committed to provide the NRC staff with the information required to evaluate the adequacy of the VY analysis and modifications for the steam dryer. The estimated completion of the analysis for the existing dryer and the detailed design and analysis for the modified dryer were also discussed at the meeting.

The following describes the detailed quantitative evaluation process, including load definition, the VYNPS specific inputs, and the results of the analysis. Also, included is a description and schedule of the modifications to be performed to the VYNPS dryer prior to EPU implementation. VY's actions with respect to GE SIL 644, Rev. 1 are also provided.

VY has been closely and continuously involved with industry events related to EPU, including recent flow-induced vibration issues at uprate conditions. VY has been interacting with NRC, INPO, BWROG, a BWR EPU Project Manager's forum, and benchmarking at previously uprated plants. VY is also taking an active role in emerging industry initiatives, including the new BWROG EPU committee, the BWROG Steam Dryer Integrity Committee, and GENE and Exelon extent of condition reviews.

In addition to participation in industry efforts, VY has, and will continue to perform as appropriate, additional technical analyses with experienced specialty experts for piping analysis, including independent technical consultant reviews of GENE activities regarding steam dryer issues. VY plans to install additional system monitoring capability to provide supplementary baseline information and to verify acceptable performance under uprate conditions. Early detection of any potential anomalies will allow for prompt, controlled response and corrective action.

Non-Proprietary Information

VY plans to implement the uprate under a conservative and well controlled Power Ascension Test Program. The uprate will be performed in two major steps (the first phase upon receipt of the license amendment and other required approvals, and the second phase after the refueling outage scheduled for the fall of 2005). Power ascension will be strictly controlled and will include a very deliberate process to prepare, increase, hold, monitor, and analyze before ascension to the next power level. Most plant modifications required for the uprate will be implemented during the spring 2004 refueling outage—allowing for significant operating experience at currently-licensed rated thermal power with the new components and modifications. Subsequent changes at the time of power ascension will include mostly setpoint changes and indicator scale replacements.

The VYNPS Steam Dryer is a BWR-3 style dryer with internal braces in the outer hoods. For the 120% power uprate application for VYNPS, a quantitative evaluation of the effects of Flow Induced Vibration (FIV) on the steam dryer has been completed to determine modifications that are required prior to CPPU implementation. The following sections describe the process and the quantitative results of the evaluation. Sections 1 through 4 describe the evaluation process and load definition process as applied to VYNPS. Sections 5 through 8 describe the key inputs from design documentation, input assumptions, and quantitative results. Section 9 describes VYNPS actions with respect to GE Service Information Letter (SIL) 644, Supplement 1. Section 10 describes the planned modifications to the VYNPS steam dryer and schedule for modification implementation.

Non-Proprietary Information

1. Steam Dryer Flow Induced Vibration (FIV) process

- For Extended Power Uprate, GENE has developed a process to evaluate the steam dryer dynamic vibration response. The method is termed "Equivalent Static Analysis Method." The Equivalent Static Analysis Method consists of the following process steps:
- A Finite Element Analysis (FEA) model of the VYNPS steam dryer was developed (see Section 2). This model was constructed using VYNPS specific dryer dimensions and material properties.
- The FEA computes steam dryer component natural frequencies and mode shapes (see Section 3).
- A reference [[ ]] static pressure load is applied in the FEA model. Steam Dryer component Membrane (Pm) and Surface (Pm + Pb) stresses are computed from the [[ ]] reference load.
- Dynamic loading on the steam dryer components is computed via the following equation:

  DL = (Pm+Pb) x (FIV Load rms) x (P) x (AF) x (C)

  Where:

  DL = Dynamic Loading (psi)

  Pm+Pb = Surface stress computed from [[ ]] reference load in FEA model

  FIV Load rms = Fluctuating load (Root-mean-squared (rms) load factor) computed from plant data and scaled to VYNPS steam velocity conditions. See Section 4 for the determination of the fluctuating load for VYNPS.

  P = Conversion factor from RMS to Zero-to-Peak (0-P). A factor of [[ ]] is used.

  AF = Amplification Factor or Dynamic Load factor. Factor can vary from [[ ]]depending on the degree of matching between a natural frequency and a spectral peak.

  C = Stress Concentration Factor. A value of [[ ]] is used.

- A screening process is used to identify components that are susceptible to stress fatigue failure at both CLTP and EPU conditions. The screening process applies an AF of [[ ]]since this implies close frequency matching conditions and results in the highest dynamic loading (peak stresses). Components that exceed the fatigue failure criterion are then further evaluated.
- Components that fail the initial screening process are further evaluated. The evaluation process assumes that the components have not failed at OLTP/CLTP conditions and, therefore have a peak stress value no larger than fatigue failure criterion (27,200 psi). This assumption is considered appropriate since there is no evidence that the components have failed at CLTP conditions. The amplification factors (AF) are back-calculated from the high stressed components using the following equation:

$$AF = \frac{27{,}200}{(Pm + Pb)(FIVLoadrms)(P)(C)}$$

- The EPU stresses are then recalculated using the revised AFs and then compared to the acceptance criterion. The highest value of AFs thus obtained is used to re-calculate CLTP and EPU stresses for remainder of the components in the low to moderate stress range.

2. Steam Dryer FEA model

- Dryer natural frequencies and stresses were calculated via finite element analyses of the dryer using the ANSYS finite element code Version 6.1. The dryer structure is dynamically isolated from the dryer skirt by the support ring. This is a result of the stiff support ring structure with its large cross-section, cross bracing from the dryer support plates, and bottom beams. Therefore, the analyses were limited to the dryer excluding the skirt.
- The finite element analysis model is shown in Figures 5, 6, and 7. The model includes the dryer support ring and cross-beams modeled with solid elements, and beam gussets, base-plate, drain troughs, dryer hoods, and the steam dam above the dryer with its support gussets, all modeled with shell elements. The dryer vane bundles are modeled as plates with sufficient stiffness for them not to interact with vibration modes of the dryer structure. The hood support braces and tie-bars are modeled as rectangular beams with section area and modulus equal to the section properties of these components. The model includes the rectangular gusset plates used to attach the diagonal braces to the hoods.
- Components, with the exception of the dryer vanes and the support ring, were modeled to represent their masses based on as-drawn dimensions and a material density of 0.29 lb/in^3. Density of the plates representing the dryer vanes was adjusted to represent the weight of the dryer vanes.

3. Steam Dryer Frequency Calculations

- The dryer support from the RPV dryer support brackets was modeled by fixing all degrees of freedom at the support ring bottom surface nodes at these locations.
- The dryer hood plates are welded to the dryer vane top plates and the vertical braces at a few discrete points. There will be a gap between the edge of the hood plates and the top plates of the vanes. Impact at these gaps will not permit resonance of the hood plates as free-edged plates. Therefore the hood and vane top plates were assumed connected when performing frequency calculations. The plates were separated when performing pressure stress calculations.
- The baffle plates (flow diverter plates at the dryer centerline) have a first mode frequency of [[ ]]. The outer hood vertical plates have a first mode frequency of [[ ]]. With the comparable dimensions of the plates, there is a vibration mode every few Hz above the fundamental frequency values that is applicable to one of these plates. Considering distribution of the potential pressure fluctuations, it would be difficult to excite modes higher than the first two modes of these plates. Therefore only the first two modes of the plates are of interest which are limited to 0-50 Hz.
- None of the horizontal plates (cover plates, hood top plates, dryer vane support plates) are excited in the 0-70 Hz range. Actually it was not possible to excite the horizontal plates without simultaneous excitation of the attached vertical plates or the dryer support ring. Therefore no specific vibration frequency could be identified for the horizontal plates. Therefore, for stress estimation, excitation frequencies for the horizontal plates were based on the excitations frequencies for the attached vertical plates. An exception was made in the case of the outside cover plates because of its failure experience at Quad Cities Unit 2. Frequencies were calculated for the outer cover plates assuming the plates to be stand-alone components fixed at the boundaries.

4. Fluctuating Load Definition

VYNPS plant specific data for dryer pressure loading is not available. GENE has developed a process whereby available steam dryer pressure loading plant data has been converted into a reference load distribution versus frequency plot that can be further scaled for plant-specific evaluation use.

4.1 Overall Process

- The reference load definition is based on all the available in-plant pressure measurements from instrumented steam dryers. The reference load definition used detailed pressure versus frequency spectrums taken from in-plant measurements for one domestic GE BWR and two foreign GE BWRs. The measured spectrums for each sensor were adjusted for sensor location to determine an effective pressure at the dryer hood vertical face. The maximum sensor readings were plotted together. The spectrum was divided into frequency zones based on the general characteristics and peaks within the zone. Observations from an additional two domestic GE BWRs and one foreign GE BWR were used to further define the frequency zones. The magnitude of the reference load was set equal to the peak value within the zone. For plant-specific applications, scaling factors were determined for each frequency zone based on the plant steamline velocity compared to the reference plant steam velocity. [[

  ]].

4.1.1 Reference Load Definition and Plant-Specific Scaling Process Steps

1. GENE laboratory scale model test measurements were used to develop multipliers to adjust the plant signal readings from the plant measurement location (e.g., skirt, mast) to arrive at an effective pressure at the dryer vertical face. [[

   ]].
2. The maximum of the sensor readings as a function of plant power level was found at each frequency for each plant sensor. This maximum was then multiplied by the appropriate multiplier ([[ ]]) to determine the equivalent vertical face pressure (Figure 2).
3. The adjusted maximums for each sensor were then plotted together on one plot. An envelope was drawn based on the maximum of all the sensor measurements. The spectrum was then divided into frequency zones based on the general characteristic and magnitudes of the peaks within the zone (Figure 3). The frequency zones also considered evidence from other plant measurements for which digitized plant measurement information was not available. [[

   ]]. The magnitude of the reference load in each frequency zone was set equal to the maximum peak value within the zone. The steamline velocity for the plant setting the magnitude of the load was also identified as the reference velocity for scaling purposes. [[

   ]]
5. For plant-specific applications, the reference load in each frequency zone is scaled for each plant based on the ratio of the plant-specific steamline velocity to the reference steamline

velocity. [[

]]For plant-specific applications, the frequency zones remain the same as the reference load definition. The plant-specific load amplitude can be determined for each frequency zone by using the following equations:

[[

]]

- Scaling of Reference load amplitudes to VYNPS load amplitudes for both CLTP and EPU is shown in Figure 4.
- The common BWR plant steam piping layout and the resulting similarities in the measured in-plant test data justify the application of the generic load definition to VYNPS. There are two primary frequency zones of interest in the load definition: 0-55 Hz and 120-205 Hz. Because of the long wavelengths involved acoustic interactions in the main steamlines and equalizing header are the source of the pressure fluctuations observed in the 0-55 Hz range. VYNPS and the plants used in developing the generic load definition all have similar steamline configurations. The overall steamlines lengths at plants are typically between 200 to 500 feet. The fundamental frequencies corresponding to these lengths are 8 to 3 Hz, respectively. The frequencies defining the reference load in the 0-55 Hz range are consistent with higher harmonics of the steamline fundamental frequencies of 3-8 Hz. Since the defining frequencies are consistent with the higher harmonics over the range of steamline lengths, the overall plant steamline length is not critical in applying the generic load definition. In addition, all the plants have a large diameter equalizing header just upstream of the turbine. The pressure fluctuations in the 120-205 Hz range may be caused by smaller diameter branch lines (e.g., SRV, HPCI) in the main steam system, or by acoustic interactions between the steamlines and the chambers formed between the dryer and the steam dome. These branch lines and regions are common between VYNPS and the plants used to develop the generic load definition. As can be seen in Figure 2, the pressure responses for the plants used to develop the generic load definition are similar. The plant-specific pressure response for VYNPS would be similar to the response for these plants.

- In addition to the similarity in pressure response shown between the plants, a significant amount of conservatism is introduced by the peak broadening used in the generic load definition. Figure 3 compares the plant data with the reference load definition. Because of the broad frequency zones around the peaks exhibited in the plant data, it is not necessary to know the exact frequencies at which the peak pressures occur for VYNPS. The peak broadening will ensure that conservative loads are applied in the VYNPS dryer analysis.

Non-Proprietary Information

- The generic load definition and scaling has been compared to the dryer loading determined in the Quad Cities 2 dryer failure root cause evaluation. In the Quad Cities 2 dryer failure root cause evaluation, the loading on the dryer was independently estimated based on in-plant test data (similar to the generic load definition), pressure measurements in a scale model test of the dryer/vessel/steamlines, and reverse-engineered fatigue calculations. When scaled to the Quad Cities operating conditions, the generic load definition predicts pressure loads that agree well with the other estimates [[

]]

Non-Proprietary Information

Figure 1 VYNPS Steam Dryer Components

[[

]]

Non-Proprietary Information

Figure 2 Steam Dryer Fluctuating Loads – Plant Data Maximum Pressures

[[

]]

Non-Proprietary Information

Figure 3 Steam Dryer Fluctuating Loads – Reference Load Definition

[[

]]

Non-Proprietary Information

Figure 4 Steam Dryer Fluctuating Loads – Reference Load Scaling to VYNPS

[[

]]

Non-Proprietary Information

Figure 5 Dryer Model – Dryer Support Structure

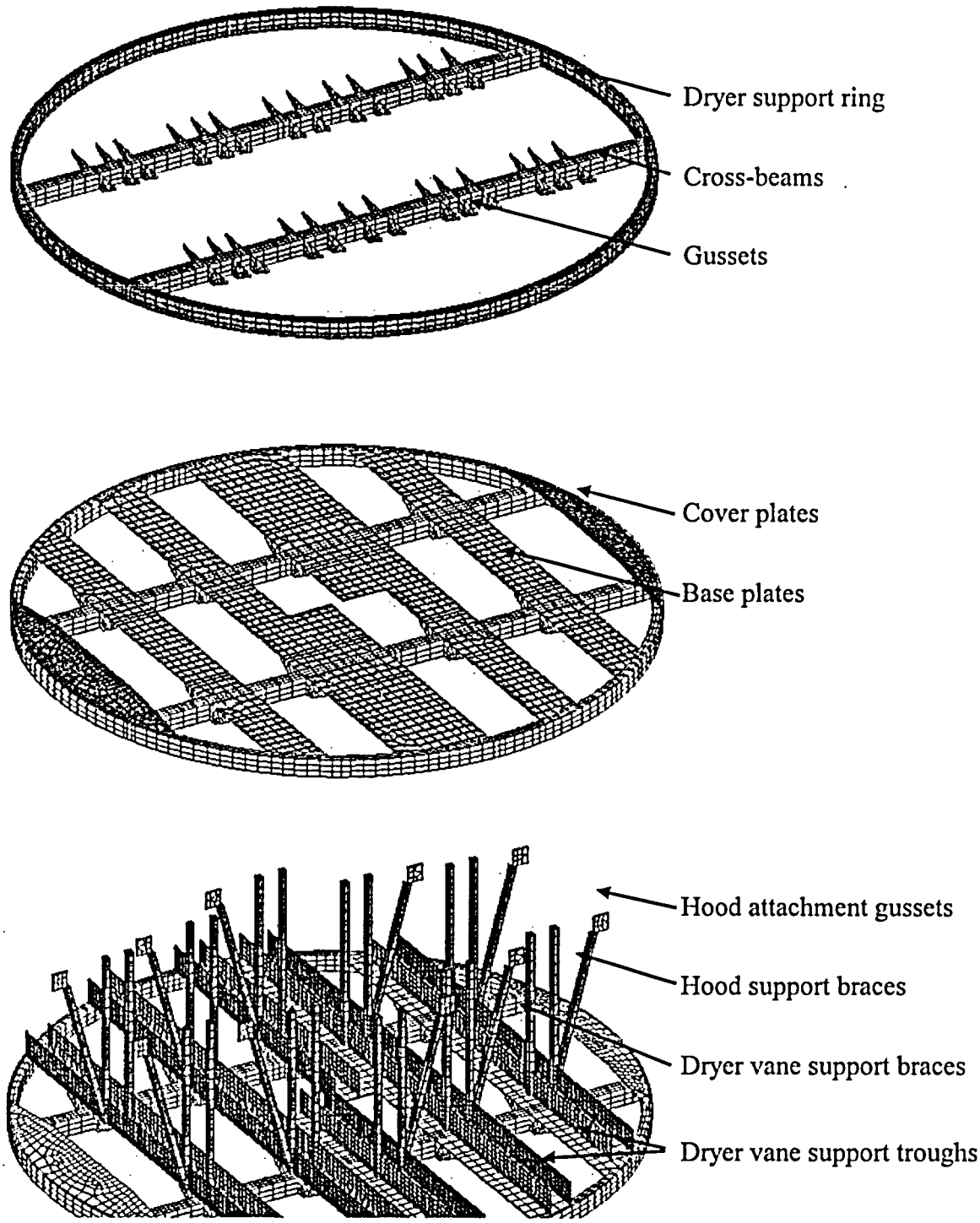

Non-Proprietary Information

Figure 6 Dryer Model – Dryer Vertical Plates and Vane Simulation Plates

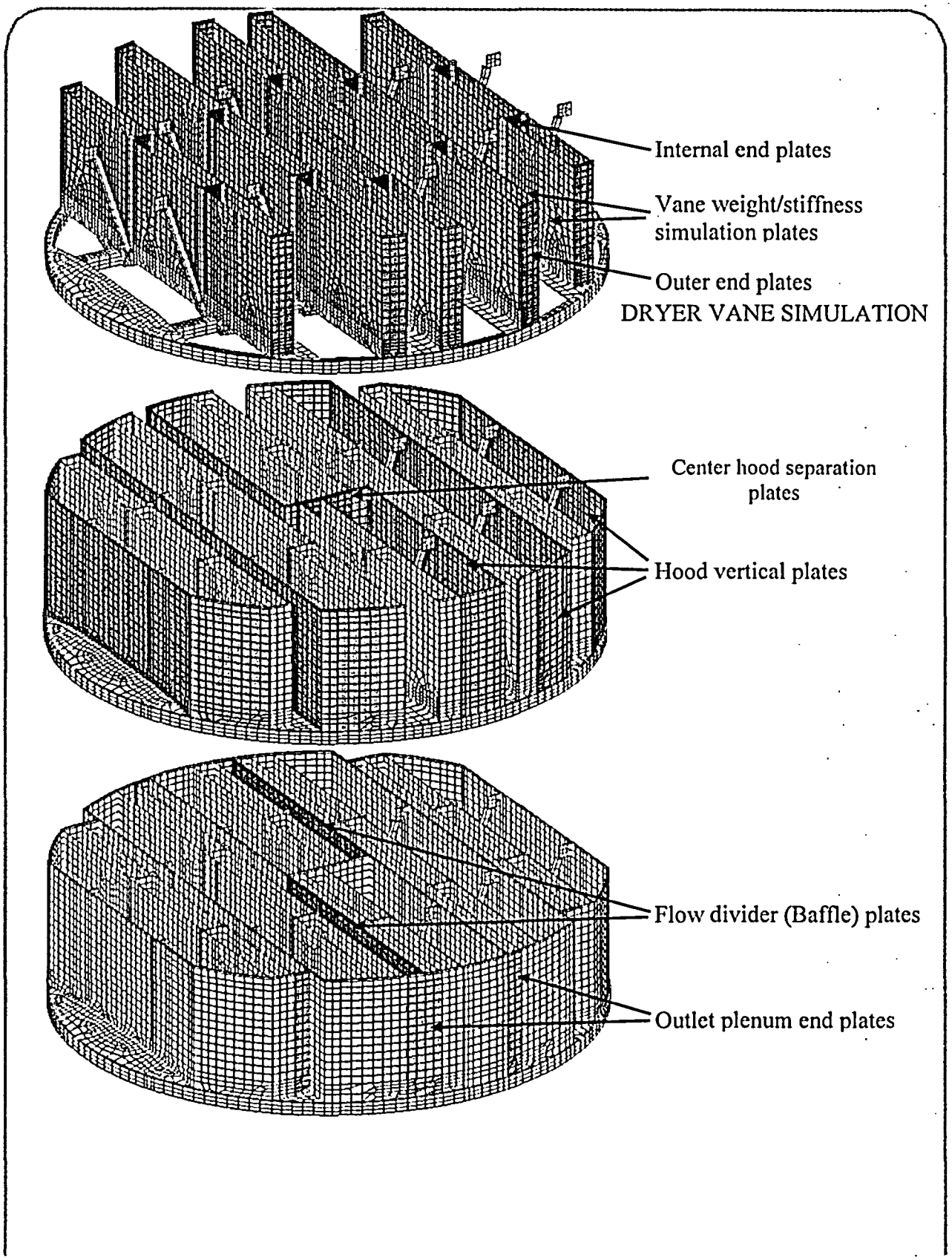

Non-Proprietary Information

Figure 7 Dryer Analysis Model

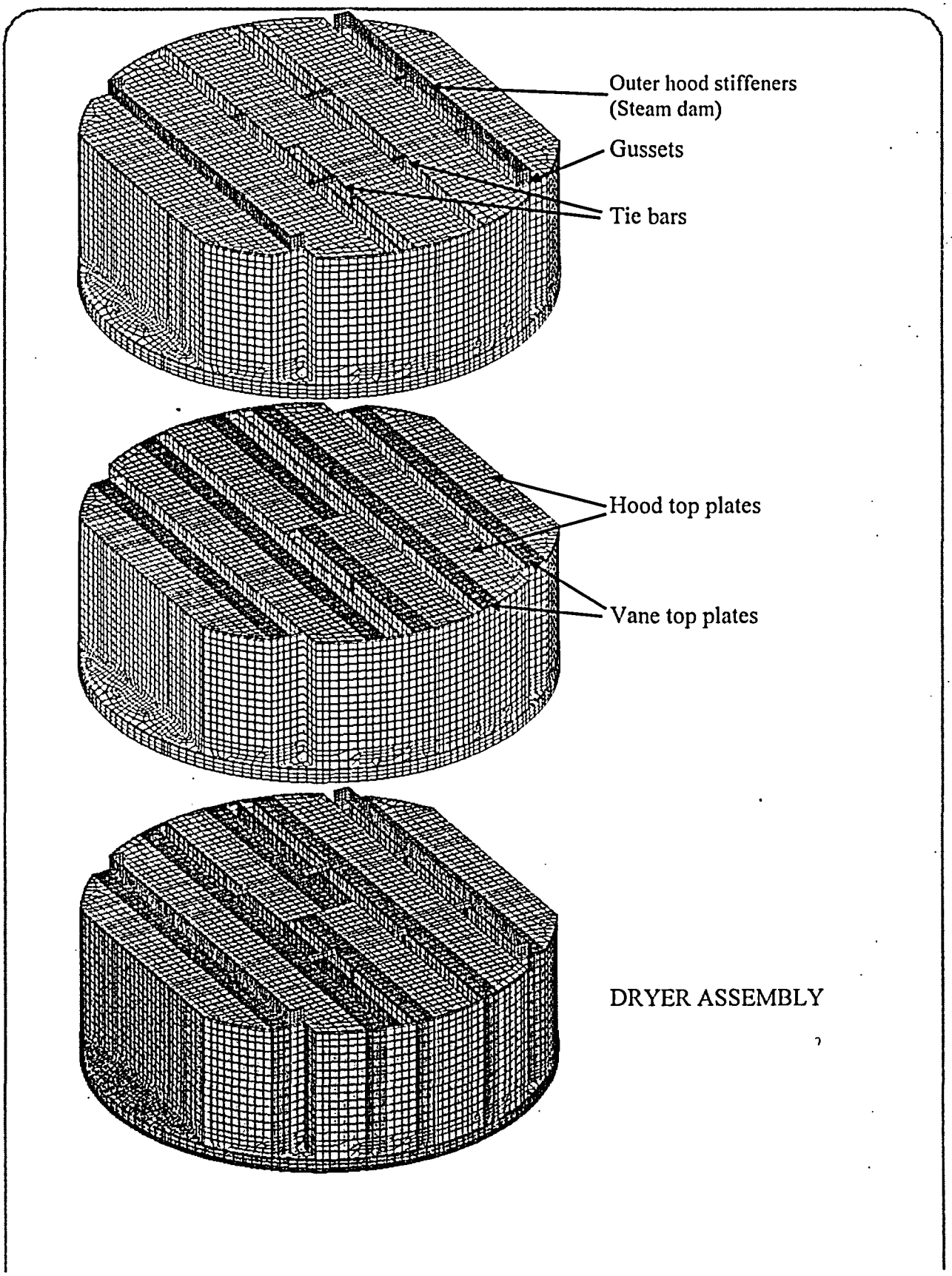

Non-Proprietary Information

5. Key Input for Steam Dryer Evaluation

Item	Key Parameter	Unit	CLTP Value	CPPU Value	Reference/Basis
1	RPV dimensions in steam path	NA	RPV design documentation validated by Entergy	Same	Design unchanged from CLTP to CPPU
2	Steam Dryer Dimensions	NA	RPV design documentation validated by Entergy	Same	Design unchanged from CLTP to CPPU
3	MS Flow Rate	Mlb/hr	6.458	7.906	Reactor Heat Balances
4	MS Flow Velocity	ft/sec	140	168	Computed from main steam flow rate, main steam pipe diameter and steam thermodynamic conditions

Non-Proprietary Information

6. Fluctuating Load Input Calculation

Frequency Range (Hz)	Reference Plant Amplitude rms psi	Reference Plant Steam Line Velocity ft/sec	Maximum Scaling Exponent	Minimum Scaling Exponent	VYNPS CLTP Amplitude rms psi	Ref./Basis	VYNPS CPPU Amplitude rms psi	Reference/Basis

Notes: Amplitude values in above table are shown graphically in Figure 4.
VYNPS CLTP Plant Specific (PS) Steam Line Velocity = 140 ft/sec
VYNPS CPPU Plant Specific (PS) Steam Line Velocity = 168 ft/sec

*VYNPS amplitudes are obtained from the following equations. The development of these equations is discussed in Section 4.1.1:

[[

]]

Non-Proprietary Information

7. Key Assumptions

Item	Assumption	Reference/Basis
1.	For the determination of fluctuating loads, the acoustic peaks in the measured data are fully developed and no new peaks will form and exceed the existing peaks. Similarly, it is assumed that the resulting maximum amplitude curve is representative of any plant.	These assumptions are based on a qualitative observation of the measured plant data for three domestic and three foreign GE BWRs. This assumption is further validated by the similarity in all plants, including VYNPS, of steam line lengths, use of large steam line equalizing headers upstream of the main turbine inlet, and similar steam line branch line configurations. (Section 4)
2.	For the determination of fluctuating loads, it is assumed that the frequencies of the acoustic peaks, when broadened over a limited band, are representative of all BWRs.	This assumption is based on a qualitative observation of measured plant data. The uncertainty in the plant-specific frequency for any given peak is addressed by defining the frequency zones in the reference load curve (Section 4).
3.	For the determination of fluctuating loads, it is assumed that the maximum amplitudes are related to the steamline velocity.	This assumption is supported by the frequency content in the plant measurement data (Section 4). The flow velocity is the governing operating parameter in acoustics. The acoustic peaks in the 25 Hz range of plant specific fluctuating load data are associated with wavelengths of about 64 feet (assuming a speed of sound in steam of 1600 ft/sec). These wavelengths are too large to come from inside the reactor vessel.
4.	The GENE plant-specific scaling of fluctuating loads based on the average amplitude within a frequency zone is appropriate.	This assumption is derived from the previous assumptions (Items 1, 2 and 3) that the acoustic peaks are fully developed, no new acoustic peaks will form, and that the maximum amplitudes are governed by the steamline velocity.
5.	A stress failure acceptance criterion of 27,200 psi is used for assessment of steam dryer components. This value is twice the ASME curve C (ASME Section III, 1986, Division 1, Appendix I, Figure I-9.2.2, Design Fatigue Curve for Austenitic Steels) value.	The VYNPS steam dryer is a non-safety related component and, while it is considered robust, was not originally designed nor rigorously analyzed for the effects of FIV. Therefore it is considered appropriate that a value of twice the ASME design fatigue curve is used to represent the mean of the failure curve. The ASME criteria for service cycles equal to 10^{11} are given in ASME Section III, 1986, Division 1, Appendix I, Figure I-9.2.2, Design Fatigue Curve for Austenitic Steels.

Non-Proprietary Information

Item	Assumption	Reference/Basis
6.	The conversion from Root-Mean-Squared (rms) to 0-P is [[ ]] times the rms value (0-P = [[ ]]x rms)	This is based on GENE experience for reactor internal vibration testing at over 20 plants and has been used as a standard conversion factor for rms to 0-P conversion in other EPU evaluations.
7.	A stress concentration factor of [[ ]] is used in the steam dryer analysis.	This factor is based on ASME assessments used in conjunction with finite element analyses to address the weld quality factor. It is used for both butt and fillet welds.
8.	Dynamic load factors range from [[ ]]minimum to [[ ]] maximum.	These factors were obtained by comparing time history dynamic analysis results with static analysis results. Higher factors result when the forcing frequency is close to the natural frequency of the component. It is recognized that at resonance, the amplification can exceed the value of [[ ]] in that the structure's response could potentially be reinforced to higher levels. However, the actual geometry of the component is complex and the peak amplitudes do not occur every cycle. They in fact would be expected to occur much less frequently, on the order of every 0.5 Hz at worse. To support the assessment of this type of loading, studies were undertaken by GENE to input actual time history pressure loading that had variable amplitude levels. The resultant amplification factors were found to range from [[ ]]depending on the proximity of the driving frequency to the structural frequency in a detailed smaller model. These analytical results were used as the basis for the maximum factor of [[ ]] being used to assess the dynamic amplification factor for bounding field case conditions in the more complex dryer structure.

Non-Proprietary Information

8. Evaluation Results

8.1 Steam Dryer Component Associated Frequencies and Stresses for [[ ]] Uniform Reference Load

Item	Component (See Figure 1 for Location)	Surface stress (Pm +Pb), psi	Associated Frequency Hz	Notes (See Section 3 for discussion)	VYNPS CLTP Amplitude rms psi	VYNPS CPPU Amplitude rms psi
1.	Base plate	[[		Part of Stiff Base Structure. Estimated Very High Frequency	[[	
2.	Outer cover plate			Stand Alone Natural Frequency		
3.	Outer cover plate			Vertical Plate Driving Frequency		
4.	Hood top plates			Vertical Plate Driving Frequency		
5.	Hood vertical plates			Natural Frequency		
6.	Hood end plates			Mixed 27th Vibration Mode		
7.	Hood end plates			Vertical Plate Driving Frequency		
8.	Hood bracing brackets (gussets)			Vertical Plate Driving Frequency		
9.	Hood below cover plate			Vertical Plate Driving Frequency		
10.	Steam 'dam'			Mixed 73rd Vibration Mode		
11.	Steam 'dam' gussets			Stiff. Estimated Very High Frequency		
12.	Hood partition plates			Stiff. Estimated Very High Frequency		
13.	Baffle plates			Natural Frequency		
14.	Outlet plenum ends			Stiff. Estimated Very High Frequency		
15.	Dryer support ring			Part of Stiff Base Structure. Estimated Very High Frequency		

Non-Proprietary Information

Item	Component (See Figure 1 for Location)	Surface stress (Pm +Pb), psi	Associated Frequency Hz	Notes (See Section 3 for discussion)	VYNPS CLTP Amplitude rms psi	VYNPS CPPU Amplitude rms psi
16.	Bottom cross beams			Part of Stiff Base Structure. Estimated Very High Frequency		
17.	Cross beam gussets		]]	Part of Stiff Base Structure. Estimated Very High Frequency		]]

Non-Proprietary Information

8.2 Steam Dryer Component FIV Stresses – Screening Process with Maximum Amplification Factor (AF)

Item	Component	CLTP Dynamic Loading (psi)	Acceptable against Fatigue Failure Criterion	CPPU Dynamic Loading (psi)	Acceptable against Fatigue Failure Criterion	Further Evaluation Required for CPPU
1.	Base plate	[[	Yes	[[	Yes	No
2.	Outer cover plate (1)		No		No	Yes See Section 8.3
3.	Outer cover plate (2)		No		No	Yes See Section 8.3
4.	Hood top plates		Yes		No	Yes See Section 8.3
5.	Hood vertical plates		No		No	Yes See Section 8.3
6.	Hood end plates (3)		Yes		Yes	No
7.	Hood end plates (2)		Yes		No	Yes See Section 8.3
8.	Hood bracing brackets (gussets)		No		No	Yes See Section 8.3
9.	Hood below cover plate		Yes		Yes	No
10.	Steam 'dam'		Yes		Yes	No
11.	Steam 'dam' gussets		Yes		Yes	No
12.	Hood partition plates		Yes		No	Yes See Section 8.3
13.	Baffle plates		Yes		Yes	No
14.	Outlet plenum ends		Yes		Yes	No
15.	Dryer support ring		Yes		Yes	No
16.	Bottom cross beams		Yes		Yes	No
17.	Cross beam gussets	]]	Yes	]]	Yes	No

Note: Amplification Factor (AF) of [[ ]] is used for both CLTP and CPPU calculation. See Section 7 item 8 for discussion.
(1) Stresses at Stand Alone Natural Frequency
(2) Stresses at Vertical Plate Driving Frequency
(3) Stresses in a Mixed Vibration Mode

Non-Proprietary Information

8.3 Steam Dryer Component FIV Stresses – Critical Components

Item	Component	Amplification Factor (AF)	CLTP Dynamic Loading (psi)	CPPU Dynamic Loading (psi)
1.	Outer cover plate (1)	[[		
2.	Outer cover plate (2)			
3.	Hood top plates			
4.	Hood vertical plates			
5.	Hood end plates			
6.	Hood bracing brackets (gussets)			
7.	Hood partition plates			]]

Note: (1) Stresses at Stand Alone Natural Frequency

(2) Stresses at Vertical Plate Driving Frequency

(3) Amplification Factor calculated that causes CLTP stress to reach acceptance criterion of 27,200 psi

(4) Maximum of Amplification Factors obtained for Item 1, 2 and 4 applied to compute stress.

Non-Proprietary Information

9. VYNPS evaluation of the recommendations in General Electric (GE) Service Information Letter (SIL) No. 644, Supplement 1, "BWR Steam Dryer Integrity."

The VYNPS steam dryer is a BWR-3 style dryer (square hood) with inner braces in the outer hoods. GE SIL 644, Supplement 1 provides the following recommendations concerning this steam dryer design with respect to flow induced vibration at power uprate conditions.

1. Review available visual inspection records to determine if there are any pre-existing flaws or undersized welds in the cover plate and outer hood locations.

VYNPS Action:

Available visual inspection records of the VYNPS steam dryer do not indicate any pre-existing flaws in the cover plate and outer hood locations. Previous inspections of the VYNPS steam dryer assembly have been limited to the steam dryer outer surfaces. Entergy is planning to perform an augmented visual inspection of both the external and internal steam dryer surfaces during the cycle 24 refueling outage in April 2004 as specified by SIL 644, Supplement 1.

2. Measure moisture content, as determined by Na-24 measurements in the reactor water and condenser hotwell, to establish a baseline value for operation near maximum core thermal power operating conditions. Measure and record the moisture content to a resolution of 0.1% or smaller. Isolate (or account for) flow through paths where reactor water can flow directly to the hotwell (e.g., reactor water cleanup reject flow, sample lines).

VYNPS Action:

VYNPS presently has a periodic monitoring program for steam moisture content. The CLTP moisture content is typically on the order of 0.04wt/%. This value is well below the original steam dryer performance specification value of less than or equal to 0.1wt/%. The calculated steam moisture content at CPPU conditions is less than 0.08%.

3. Monitor reactor pressure, water level, individual steamline flow, and feedwater flow on a daily basis for significant anomalies (such as step changes in indicated values) that may indicate a steam dryer failure. Monitor and compare indications on each instrument reference leg; a dryer failure near the reference leg tap may affect the indications for the sensors on that reference leg. The step changes that were observed during the 2002 cover plate failure were usually small (2-3 psi for reactor pressure, ~two inches for reactor level,~5% for steamline flow); therefore, trend plots of the data will be useful for performing the recommended monitoring.

VYNPS Action:

VYNPS plans to develop a moisture carryover/dryer integrity monitoring program that encompasses the parameters discussed in the SIL. The trends in the above parameters can be compared with changes in the carryover to note potential indications of dryer problems.

4. Implement a moisture content monitoring program that measures moisture content at least once per week. If a significant change or a steadily increasing trend is observed, monitor moisture content daily and evaluate recent plant maneuvers or events and associated plant parameters to identify the cause of the increased moisture content. If the cause of the increased moisture content cannot be determined, consider a reduction in power or an orderly plant shutdown for inspection.

Non-Proprietary Information

VYNPS Action:

VYNPS currently monitors-moisture carryover on approximately a weekly basis. As previously noted VYNPS plans to develop a moisture carryover/dryer integrity monitoring program that trends a number of different parameters, along with carryover, in an attempt to identify potential dryer problems.

5. Perform a visual inspection ("best effort" VT-1) of the steam dryer at the next scheduled refueling outage. This inspection should include the most susceptible locations as determined by a dryer stress analysis (refer to Figure 4 of SIL). This inspection should include both an external and internal inspection of the accessible areas. Remove trapped bubbles to ensure complete coverage of internal areas.

VYNPS Action:

VYNPS will perform a baseline visual inspection as specified by SIL 644, Supplement 1 of the VYNPS steam dryer, both external and internal, in the cycle 24 refueling outage prior to planned CPPU implementation.

6. Repeat the visual inspection in at subsequent refueling outages.

VYNPS Action:

VYNPS will repeat the steam dryer visual inspections in the refueling outages after CPPU implementation as recommended by the repair vendor and/or the BWROG/BWRVIP.

Non-Proprietary Information

10. Extended Power Uprate Dryer Modification Plan and Schedule for Dryer Modification Implementation.

The following modifications to the VYNPS steam dryer are currently being designed by GENE in order to ensure acceptability of the dryer at CPPU operating conditions:

1. Replace dryer lower cover plates (dryer 90 degree and 270 degree azimuths) with 0.5 inch thickness plate with 0.5 inch welds. The original lower cover plate is constructed of 0.25 inch thickness plate with 3/16 inch welds.
2. Replace the upper thirty inch section of the 90 degree and 270 degree azimuth flat vertical hoods with 1 inch thickness plate. The original dryer vertical hood plate thickness is 0.5 inch.
3 Replace a fifteen inch section of the dryer upper cover plates (90 degree and 270 degree azimuth), where each upper cover plate intersects the flat vertical hoods with 1 inch thick plate
4. Remove inner hood bracing that attaches to the vertical dryer hoods
5. Install gussets (33 inch high) between the modified lower dryer cover plates and the unmodified section of the flat vertical dryer hoods.
6. Install dryer bank tie bar reinforcements.

The modified VYNPS steam dryer is analyzed using the process described in Section 1 of this response. In addition, the fatigue loading acceptance criterion for the modified steam dryer is 13,600 psi, corresponding to the ASME Section III, 1986, Division 1, Appendix I, Figure I-9.2.2, Design Fatigue Curve for Austenitic Steels. Entergy will install the steam dryer modifications in the plant refueling outage prior to planned operation at Extended Power Uprate conditions, April 2004.