NUREG/CR-5555
BNL-NUREG-52232

Aging Assessment of the Westinghouse PWR Control Rod Drive System

Prepared by
W. Gunther, K. Sullivan

Brookhaven National Laboratory

Prepared for
U.S. Nuclear Regulatory Commission

AVAILABILITY NOTICE

Availability of Reference Materials Cited in NRC Publications

Most documents cited in NRC publications will be available from one of the following sources:

1. The NRC Public Document Room, 2120 L Street, NW, Lower Level, Washington, DC 20555

2. The Superintendent of Documents, U.S. Government Printing Office, P.O. Box 37082, Washington, DC 20013-7082

3. The National Technical Information Service, Springfield, VA 22161

Although the listing that follows represents the majority of documents cited in NRC publications, it is not intended to be exhaustive.

Referenced documents available for inspection and copying for a fee from the NRC Public Document Room include NRC correspondence and internal NRC memoranda; NRC Office of Inspection and Enforcement bulletins, circulars, information notices, inspection and investigation notices; Licensee Event Reports; vendor reports and correspondence; Commission papers; and applicant and licensee documents and correspondence.

The following documents in the NUREG series are available for purchase from the GPO Sales Program: formal NRC staff and contractor reports, NRC-sponsored conference proceedings, and NRC booklets and brochures. Also available are Regulatory Guides, NRC regulations in the *Code of Federal Regulations*, and *Nuclear Regulatory Commission Issuances*.

Documents available from the National Technical Information Service include NUREG series reports and technical reports prepared by other federal agencies and reports prepared by the Atomic Energy Commission, forerunner agency to the Nuclear Regulatory Commission.

Documents available from public and special technical libraries include all open literature items, such as books, journal and periodical articles, and transactions. *Federal Register* notices, federal and state legislation, and congressional reports can usually be obtained from these libraries.

Documents such as theses, dissertations, foreign reports and translations, and non-NRC conference proceedings are available for purchase from the organization sponsoring the publication cited.

Single copies of NRC draft reports are available free, to the extent of supply, upon written request to the Office of Information Resources Management, Distribution Section, U.S. Nuclear Regulatory Commission, Washington, DC 20555.

Copies of industry codes and standards used in a substantive manner in the NRC regulatory process are maintained at the NRC Library, 7920 Norfolk Avenue, Bethesda, Maryland, and are available there for reference use by the public. Codes and standards are usually copyrighted and may be purchased from the originating organization or, if they are American National Standards, from the American National Standards Institute, 1430 Broadway, New York, NY 10018.

DISCLAIMER NOTICE

This report was prepared as an account of work sponsored by an agency of the United States Government. Neither the United States Government nor any agency thereof, or any of their employees, makes any warranty, expressed or implied, or assumes any legal liability of responsibility for any third party's use, or the results of such use, of any information, apparatus, product or process disclosed in this report, or represents that its use by such third party would not infringe privately owned rights.

NUREG/CR-5555
BNL-NUREG-52232
RV

Aging Assessment of the Westinghouse PWR Control Rod Drive System

Manuscript Completed: November 1990
Date Published: March 1991

Prepared by
W. Gunther, K. Sullivan

S. K. Aggarwal, NRC Program Manager

Brookhaven National Laboratory
Upton, NY 11973

Prepared for
Division of Engineering
Office of Nuclear Regulatory Research
U.S. Nuclear Regulatory Commission
Washington, DC 20555
NRC FIN A3270

ABSTRACT

A study of the effects of aging on the Westinghouse Control Rod Drive (CRD) System was performed as part of the Nuclear Plant Aging Research (NPAR) Program. The objectives of the NPAR Program are to provide a technical basis for identifying and evaluating the degradation caused by age in nuclear power plant systems, structures, and components. The information from NPAR studies will be used to assess the impact of aging on plant safety and to develop effective mitigating actions.

The operating experience data were evaluated to identify predominant failure modes, causes, and effects. For this study, the CRD system boundary includes the power and logic cabinets associated with the manual control of rod movement, and the control rod mechanism itself. The aging-related degradation of the interconnecting cables and connectors and the rod position indicating system also were considered. The evaluation of the data, when coupled with an assessment of the materials of construction and the operating environment, leads to the conclusion that the Westinghouse CRD system is subject to degradation from aging which, if unchecked, could affect its intended safety function and performance as a plant ages. The number of CRD system failures which have resulted in a reactor trip (challenge to the safety system) warrants continued attention.

Ways to detect and mitigate the effects of aging are included in this report. The current maintenance practices for the control rod drive system for fifteen Westinghouse plants were obtained through an industry survey. The results of the survey indicate that some plants have modified the system, replaced components, or expanded preventive maintenance. Several of these activities have effectively addressed the aging issue. However, maintenance practices appear to vary from one plant to another, possibly reflecting inadequacies at some plants.

TABLE OF CONTENTS

	Page
ABSTRACT	iii
FIGURES	viii
TABLES	x
SUMMARY	xi
ACKNOWLEDGEMENTS	xv
1. INTRODUCTION	1-1
1.1 Background	1-1
1.2 Objectives	1-3
1.3 System Boundary	1-5
1.4 Analysis Methodology and Format of the Report	1-7
2. CRD SYSTEM DESIGN REVIEW	2-1
2.1 Introduction	2-1
2.2 Rod Cluster Control Assemblies	2-3
2.3 Control Rod Drive Mechanism	2-5
2.3.1 Operation of the CRDM	2-9
2.3.2 Arrangement of the CRDM	2-9
2.4 Rod Control System	2-10
2.4.1 Description of Rod Control System Equipment.	2-10
2.4.2 Rod Control System Alarms	2-14
2.5 Rod Position Indication Systems	2-14
2.5.1 Individual Rod Position Indication System	2-16
2.5.2 Bank Demand Position Indication System	2-20
3. OPERATIONAL AND ENVIRONMENTAL STRESSES	3-1
3.1 CRD System Operating Stresses	3-1
3.2 CRD System Environmental Stresses	3-3
3.3 Component Level Stresses and Degradation	3-4
3.3.1 Rod Cluster Control Assembly	3-5
3.3.2 Control Rod Drive Mechanisms	3-7
3.3.3 Power and Logic Cabinets	3-10
3.3.4 Rod Position Indication Systems	3-10
4. OPERATING EXPERIENCE FAILURE DATA ANALYSIS	4-1
4.1 Dominant Failure Trends	4-2
4.1.1 Aging Fraction	4-2
4.1.2 Effects of Failure	4-4
4.1.3 Causes of Failure	4-6
4.1.4 Modes of Failure	4-6
4.2 Component Failure Analysis	4-8
4.2.1 Rod Cluster Control Assembly	4-8
4.2.2 Control Rod Drive Mechanism	4-11
4.2.3 Power and Logic Cabinets	4-12

Contents (Cont'd)

		Page
	4.2.4 Electrical Cables and Connectors	4-20
	4.2.5 Rod Position Indication	4-21
	4.3 Modes, Mechanisms, and Causes of Failure	4-22
5.	FAILURE MODES AND EFFECTS ANALYSIS	5-1
	5.1 Control Rod Drive Mechanism	5-2
	5.2 CRD Power Cabinet	5-2
	5.3 CRD Logic Cabinet	5-5
6.	REVIEW AND EVALUATION OF INSPECTION, SURVEILLANCE, MONITORING, AND MAINTENANCE	6-1
	6.1 Evaluation of Current Maintenance Practices	6-1
	6.2 Westinghouse Standard Technical Specifications	6-9
	6.2.1 CRD Position Requirements	6-9
	6.2.2 Control Rod Drop Time	6-10
	6.2.3 Design Requirements	6-10
	6.2.4 Operating Practices	6-10
	6.3 Inspection, Surveillance, Monitoring, and Maintenance (I,S,M & M) Techniques	6-11
	6.3.1 CRDM Data Analyzing System	6-11
	6.3.2 Statistical Techniques	6-11
	6.3.3 Monitoring Control Rod Guide Tube Support Pin Degradation	6-15
	6.3.4 Life Cycle Testing-Monitoring Wear Rates	6-15
	6.3.5 Profilometry and Eddy Current Testing	6-16
	6.3.6 Electronic Characterization and Diagnostics System (ECAD)	6-20
7.	DISCUSSION OF CRD SYSTEM RESEARCH AND NRC EXPERIENCE	7-1
	7.1 NRC Research and Experience	7-1
	7.2 Industry Research	7-9
8.	CONCLUSIONS AND RECOMMENDATIONS	8-1
	8.1 Conclusions	8-1
	8.1.1 Susceptibility of System to Aging	8-1
	8.1.2 Operating Experience	8-2
	8.1.3 System Design Review	8-3
	8.1.4 Maintenance Practices	8-4
	8.2 Recommendations	8-4
	8.2.1 Design	8-4
	8.2.2 Maintenance and Monitoring	8-5
	8.3 Future Work	8-6
9.	REFERENCES	9-1

Table of Contents (Cont'd)

Page

APPENDICES

A. WESTINGHOUSE CRD SYSTEM DESIGN REVIEW A-1

A.1 Rod Cluster Control Assembly & Reactor Internal Components A-1

A.2 CRDM Operation A-2

A.3 Rod Control System Operation A-11

A.3.1 Power Cabinets A-12
A.3.2 Logic Cabinet A-17

B. SUMMARY OF LICENSEE EVENT REPORTS FOR THE WESTINGHOUSE CONTROL ROD DRIVE SYSTEM B-1

C. INDUSTRY SURVEY OF CURRENT MAINTENANCE PRACTICES .. C-1
NPAR Questionnaire-Magnetic Jack Control Drive Systems C-1
Westinghouse Pressurized Water Reactors - Background C-1
Questionnaire Organization C-1

LIST OF FIGURES

Figure No.	Title	Page
1.1	Number of Westinghouse plants per age category	1-3
1.2	CRD system boundary	1-5
1.3	Rod position information system	1-6
2.1	Westinghouse PWR	2-2
2.2	CRd system block diagram	2-3
2.3	Rod cluster control assembly	2-4
2.4	RCCA spider assembly	2-6
2.5	CRDM	2-7
2.6	CRDM bank and group arrangement	2-11
2.7	Rod control system - block diagram	2-11
2.8	Logic cabinet - block diagram	2-13
2.9	Analog IRPI system - block diagram	2-17
2.10	Digital rod position indication system - block dia.	2-18
4.1	CRD failure distribution	4-3
4.2	CRD system aging fraction	4-4
4.3	Effects of failure on CRD	4-5
4.4	Effect of failure on plant operation	4-5
4.5	CRD system failure modes	4-8
4.6	Control rod guide tube support pins	4-10
4.7	Power and logic cabinet subcomponent failures	4-13
4.8	Power and logic cabinet	4-15
4.9	Rod position indication system failure causes	4-21
6.1	CRDM data analyzing system - conceptual	6-12
6.2	Dynamic response of CRDM	6-12
6.3	Example of data generated during CRDM motion	6-13
6.4	CRDM test setup	6-13
6.5	Plot of hazard values for CRD system subcomponent	6-14
6.6	Guide tube support pin and ultrasonic probe	6-16
6.7	Model L106A full length CRDM showing location of high cobalt parts	6-17
6.8	Details of high cobalt parts in latch assembly	6-18
6.9	Profilometry for steam generator tube	6-19
6.10	Fuel rod diameter profile	6-20
7.1	Cutaway of typical fuel assembly with control rod	7-3
7.2	CRDM showing location of high cobalt parts	7-12
7.3	Control rod wear	7-14
A.1	Individual absorber rod	A-2
A.2	Fuel assembly guide thimbles	A-3
A.3	Fuel assembly	A-4
A.4	Control rod guide tube assembly	A-5

List of Figures (Cont'd)

Figure No.	Title	Page
A.5	Control rod guide tube	A-6
A.6	RCCA withdrawal sequence	A-8
A.7	Sequencing of groups within banks	A-13
A.8	Control bank overlap program	A-13
A.9	CRD power distribution	A-15
A.10	Thyristor bridge control	A-15
A.11	Logic cabinet block diagram	A-17

LIST OF TABLES

Table No.	Title	Page
1.1	Westinghouse PWRs in the NPAR study	1-2
1.2	Westinghouse CRD system history	1-4
2.1	Power and logic cabinet urgent failures	2-15
3.1	Significant Westinghouse CRD system degradation mechanisms	3-12
3.2	CRD system stress summary	3-14
4.1	Summary of human related LERs	4-7
4.2	Power and logic cabinet printed circuit Card failure summary	4-16
4.3	Operating experience failure summary	4-23
5.1	Westinghouse control rod drive system FMEA; mechanism	5-3
5.2	Control rod drive system FMEA; power cabinet	5-6
5.3	Control rod drive system FMEA; logic cabinet	5-14
6.1	Survey respondents	6-2
6.2	Preventive maintenance practices for mechanical components within containment	6-5
6.3	Preventive maintenance practices for electrical components within containment	6-6
6.4	Preventive maintenance practices for components outside of containment	6-7
6.5	Useful means for determining and maintaining CRD system operational readiness	6-8
7.1	Control rod drive events from NUREG/CR-3950	7-5
7.2	Standard review plan summary for CRD	7-9
B.1	Cable/connector LERs	B-2
B.2	Human error LERs	B-3
B.3	Power and logic cabinet LERs	B-4
B.4	CRDM LERs	B-10
B.5	LERs with failure cause not delineated	B-12
B.6	Rod position indication LERs	B-13

SUMMARY

The Westinghouse Control Rod Drive (CRD) system consists of the control rods and the mechanical and electrical components which control rod motion. General Design Criteria 26 of 10CFR Part 50, Appendix A, defines the requirements for reactivity controls, stating that, among other things, the CRD system shall be capable of reliably controlling reactivity changes so that specified fuel design limits are not exceeded. This study examines the design, construction, maintenance, and operation of the system to assess its potential for degradation as the plant ages. The extent to which aging could affect the safety objectives of the system is discussed. NPAR studies are also being conducted for the Combustion Engineering, Babcock and Wilcox, and General Electric Company designs of the CRD system.

The review of the operating experience of this system as documented in the License Event Reports (LERs), Nuclear Plant Reliability Data System (NPRDS), and Nuclear Power Experience (NPE) data bases resulted in the following observations. (These sources provided an average of 30 unique failure events per year over the last 10 years of which approximately 35% were directly attributable to aging related degradation.)

- The majority of the reported failures occurred in the electrical area, namely the power and logic cabinets, and the rod position indication subsystem.
- Approximately 40% of the reported failures resulted in a rod drop. This event usually challenges the reactor protection system which initiates a reactor trip.
- Several failure modes, such as rod position drift, and overheating of the power cabinet, are common to many plants. This finding could indicate the need for generic resolutions of these system problems.

The design of the system is described emphasizing components that have experienced age-related degradation. In general, the design of the Westinghouse CRD system incorporates failure detection capabilities which adequately address one of the safety concerns - uncontrolled rod withdrawal. Those components whose single failure could lead to this condition are monitored; an "urgent" alarm is activated and rod motion (except trip), is blocked. The design of the system also contains a "non-urgent" alarm, which identifies the failure of certain redundant components, such as power supplies. Determining that other safety objectives are met requires monitoring, testing, and inspections.

The normal operating and environmental stresses experienced by the system components were assessed to determine their effect on the long term performance of the system. For instance, the regular stepping action associated with control rod motion results in wear of the latch and drive rod components, and in electrical surges on the Control Rod Drive Mechanism (CRDM) coils. The amount of latch wear was measured in another study, and it is described in this report, along with other research related to aging of the CRD system.

Other examples of aging related degradation identified in this study and the stresses associated with each are listed below:

•	Flow induced vibration	Fretting wear of guide tube and rod cluster control assembly (RCCA)
•	Coolant particle debris	Latch wear and drive rod binding
•	High Temperature	Loss of in-containment cable and coil insulation integrity; degradation of electronics in power and logic cabinets; and rod position indication drift

A Failure Modes and Effects Analysis (FMEA) of the Westinghouse control rod drive system was also conducted, and components with a high safety significance identified. For this study, a high safety significance means that the failure results in:

- a challenge to a safety system, i.e., a reactor trip,
- the inability of the CRD system to achieve its safety function, i.e., stuck rods, or
- a breach of the primary system pressure boundary.

The FMEA also illustrates the likelihood of the failure. This assessment is based on the operating experience data and the evaluation of the component's susceptibility to age-related degradation. Based on the FMEA, several components which should receive attention as a plant ages are:

- cables, coils, and connectors (in-containment)
- latch assembly
- guide tube
- selected electronics within the power and logic cabinets

An evaluation of inspection, surveillance, monitoring, and maintenance was accomplished with support from industry. Results from the survey were received from fifteen plants representing ten utilities. Results from most plants agreed that two of the required technical specification tests (rod drop time test and rod exercising) are beneficial in verifying the operational readiness of the system. Preventive maintenance activities for electrical components within containment dominate the overall maintenance resources applied to this system. Only a few plants are using circuit monitoring techniques or non-destructive testing, such as eddy current or ultrasonic testing to monitor the long-term operational characteristics of this important system. The fact that a substantial portion of the system is considered not related to safety may be a factor in that choice.

Techniques to detect and mitigate the effects of aging are described. These methods include a discussion of the required testing in the technical specification (tech spec), an on-line circuit signature analysis system being marketed by the Japanese, and life cycle testing performed by Westinghouse and France.

Previous research and regulatory efforts related to the Westinghouse CRD system are discussed in this report. Of particular interest, is NRC NUREG-0641 on the wear of control rod guide tubes, study E613 from the Office for Analysis and Evaluation of Operational Data (AEOD) concerned with localized wear of RCCAs, and EPRI-sponsored reports on plant life extension and control rod lifetime determination. Research on the extension of plant life, for example, on a Westinghouse PWR, identifies the latch, drive rod, and coil stack assemblies as limited-life components. Additional research in the area of thermal embrittlement, and monitoring CRDM steps are two recommendations from this EPRI research that have been evaluated.

The findings and recommendations of this aging study may be summarized as follows:

- Aging-related degradation of the Westinghouse CRD system can, and has to a certain degree, compromised the intended function of the system. This degradation includes deterioration which results in a stuck control rod or an inadvertent control rod drop. Therefore, means to detect and mitigate this degradation in the safety and non-safety portions of the system should be pursued.

- The test requirements on the system (rod drop timing test and rod exercising) are important in determining the operational readiness of the system. While these tests cause some incremental wear on the mechanical part of the system, the benefits outweigh any test-related wear. Therefore, it is recommended that these tests remain in the tech specs.

- The preventive maintenance, including inspection and testing, of the in-containment cable, connectors, and coils should be increased as these components age. Consideration should be given to the use of predictive maintenance concepts such as non-intrusive, on-line monitoring techniques. Resistance, dissipation factor, and capacitance are three measurable parameters which can provide important historical data necessary for maintenance and decisions on life assessment. The pulling of fuses to initiate the rod drop timing test can create a loose connection between fuse and fuse clip or damage to the fuse. Consideration should be given to modifying the method of performing this test or accounting for the degradation which could result.

- The logic associated with the speed and motion control of the system is complex. Errors in maintaining this portion of the system have resulted in reactor trips and additional stress to the system. Repair and replacement procedures for this portion of the system should be evaluated for completeness and accuracy. Training personnel to implement these procedures should be emphasized.

ACKNOWLEDGEMENTS

The authors wish to acknowledge the direction of the NRC Program Manager, Mr. Satish K. Aggarwal. We would also like to express our appreciation to Mr. James Thomas of Duke Power Company, Dr. George Sliter of EPRI, Mr. Alex Marion of NUMARC, and Messrs. W. Grant and M. Smith of MPR Associates, Inc. for their efforts in obtaining valuable responses from fifteen plants to an in-depth questionnaire.

We would like to express our gratitude to various members of the Engineering Technology Division of BNL, including Mr. Robert E. Hall, Dr. John Boccio, Mr. John Taylor, Mr. James Higgins, Dr. Mano Subudhi, Dr. Ralph Fullwood, and Mr. Edward Grove for providing technical assistance, guidance, and a review of this report. Our colleagues at INEL, PNL, and ORNL, who provided constructive comments on this report are also acknowledged, as are the Westinghouse Company staff who provided valuable insights in their review of the draft report.

Finally, we wish to thank Ms. Ann Fort for her help in the preparation of this manuscript; Ms. Avril Woodhead for editing it, and the BNL Nuclear Safety Library staff for their assistance in obtaining the support documentation that made this report possible.

1. INTRODUCTION

The control rod drive (CRD) system plays a vital role in the safe and reliable operation of nuclear power plants. This report describes the results of an assessment of the CRD system used in Westinghouse pressurized water reactors (PWRs). Under the U.S. NRC's Nuclear Plant Aging Research (NPAR) program, CRD systems of other nuclear steam supplier will also be evaluated.[1]

This section describes the overall objectives of the research and how it relates to other NRC and industry activities. The system boundary established for this study is described, including justification for including non-safety components. The organization of the report is illustrated to assist the reader in finding the material which supports the recommendations and conclusions.

1.1 Background

The effects of aging on the safety of nuclear power plants has become an increasingly important area of regulatory attention. As directed by the Executive Director for Operations (EDO), the NRC Office of Regulatory Research (RES) developed and implemented the Nuclear Plant Aging Research (NPAR) Program to assess the effects of aging on important plant components, structures, and systems.

Brookhaven National Laboratory (BNL) completed a phase 1 aging assessment of the Westinghouse CRD system in accordance with the guidelines of the NPAR Program Plan and BNL's Aging and Life Extension Assessment Program (ALEAP) Systems Level Plan.[2] As described in these documents, the phase 1 CRD system study includes:

- a detailed evaluation of operating experience data,
- an analysis of industry operating and maintenance information,
- an identification of failure modes, causes, and effects, and
- a review of design, operating environment, and performance requirements.

Forty-seven operating nuclear power plants employ a Westinghouse control rod drive system. These plants are identified in Table 1.1, which categorizes the plants by age (years since initial criticality), and type (number of loops). The design of the control rod drive system is independent of the number of loops, varying only in size; that is, a four-loop plant may have 53 control rod drive mechanisms (CRDMs), while a two-loop plant has only 29. The power and logic cabinets contain the same type of circuitry, again varying only in the quantity needed to support the number of CRDMs.

Nine Westinghouse plants were not operating as of January 1989 and therefore, were not included in this study. The operating years accumulated by the other Westinghouse plants are illustrated in Figure 1.1. As of January 1989, these units accumulated approximately 470 years, with more than half of the plants having more than 10 years of operational experience.

The Westinghouse CRD system has experienced several problems as documented in Table 1.2. These documents address a variety of components in this system and provide evidence that supports the need to examine these components. The history of regulatory activities associated with this system are described in Section 7 of this report. Section 7 also discusses related research, such as work on plant life

extension and on core materials. No results exist which use actual operating experience, detailed design information, and current maintenance practices to predict system degradation with time, thus making the NPAR Program unique for this system.

Table 1.1 Westinghouse PWRs in the NPAR study

A. Less than 5 years of operation (14)

3 Loop Plants	4 Loop Plants
Shearon Harris	Byron 1 & 2
Beaver Valley 2	Braidwood 1&2
	Catawba 1&2
	Vogtle 1
	Millstone 3
	Diablo Canyon 1&2
	Callaway
	Wolf Creek

B. 5 to 10 years of operation (8)

3 Loop Plants	4 Loop Plants
Farley 2	McGuire 1&2
Summer 1	Salem 2
North Anna 2	Sequoyah 1&2

C. 10 to 15 years of operation (10)

2 Loop Plants	3 Loop Plants	4 Loop Plants
Prairie Island 2	Farley 1	D.C. Cook 1&2
Kewaunee	Beaver Valley 1	Indian Point 3
	North Anna 1	Trojan
		Salem 1

D. 15 to 20 years of operation (12)

2 Loop Plants	3 Loop Plants	4 Loop Plants
Prairie Island 1	Robinson 2	Zion 1&2
Ginna	Turkey Point 3&4	Indian Point 2
Point Beach 1&2	Surry 1&2	

E. Greater than 20 years of operation (3)

3 Loop Plants	4 Loop Plants
San Onofre 1	Yankee Rowe Haddam Neck

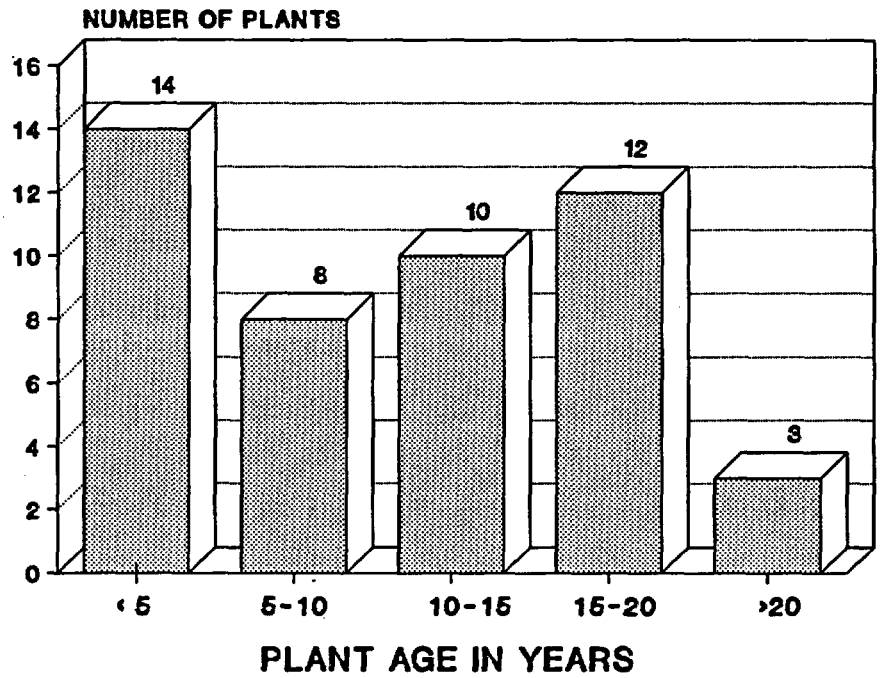

Figure 1.1 Number of Westinghouse plants per age category (Data as of 1/89, using initial criticality date as time zero.)

1.2 Objectives

The objectives of this study are as follows:

1. Identify aging and service wear effects which, if unchecked, could cause degradation of the system and thereby impair plant safety.

2. Identify methods of inspection, surveillance, and monitoring which will assure timely detection of significant aging effects prior to the loss of safety function.

3. Evaluate the effectiveness of maintenance practices in mitigating the effects of aging and in diminishing the extent of degradation caused by aging and service wear.

Table 1.2 Westinghouse CRD system history

Year	NRC Reference	CRD Component	Age Related Concern
1980	NUREG-0641	Control Rod Guide Tube	Wear; structural integrity
1982	IN 82-29	Guide Tube Support Pins	Stress corrosion cracking (Recurring problem in France through 1989)
1985	IN 85-14	Breech Guide Screw	Loose parts in latch assembly cause stuck control rod
	IN 85-86	Power/Logic Cabinets	Electrical transient effects on solid state components
1986	AEOD E613	RCCA	Flow induced wear, IGSCC of rodlets, wear due to rod motion
1987	IN 87-05	Rod Control System	Interface with protection systems
	IN 87-19	RCCA	Flow induced vibration caused perforation
1989	IN 89-31	Control Rods	Swelling and cracking of Hafnium rods

To achieve these goals for the Westinghouse CRD system, several subtasks were accomplished.

- a review of the operating experience to identify the dominant failure modes, mechanisms, and effects.
- a failure modes and effects analysis to identify the components which directly affect the functional goals of the system, and
- a survey of Westinghouse utilities to ascertain current maintenance testing.

Two preliminary tasks were completed: 1) the system boundary was established and its safety implications identified, and 2) a methodology was developed for performing the system analysis. These are discussed in the following sections.

1.3 System Boundary

The Westinghouse CRD system consists of power cabinets, logic cabinets, coils, cable, drive mechanism and control rods (Figure 1.2). For the study, the rod position information subsystem, shown in Figure 1.3 is also included. The functions of these are described in detail in Section 2.

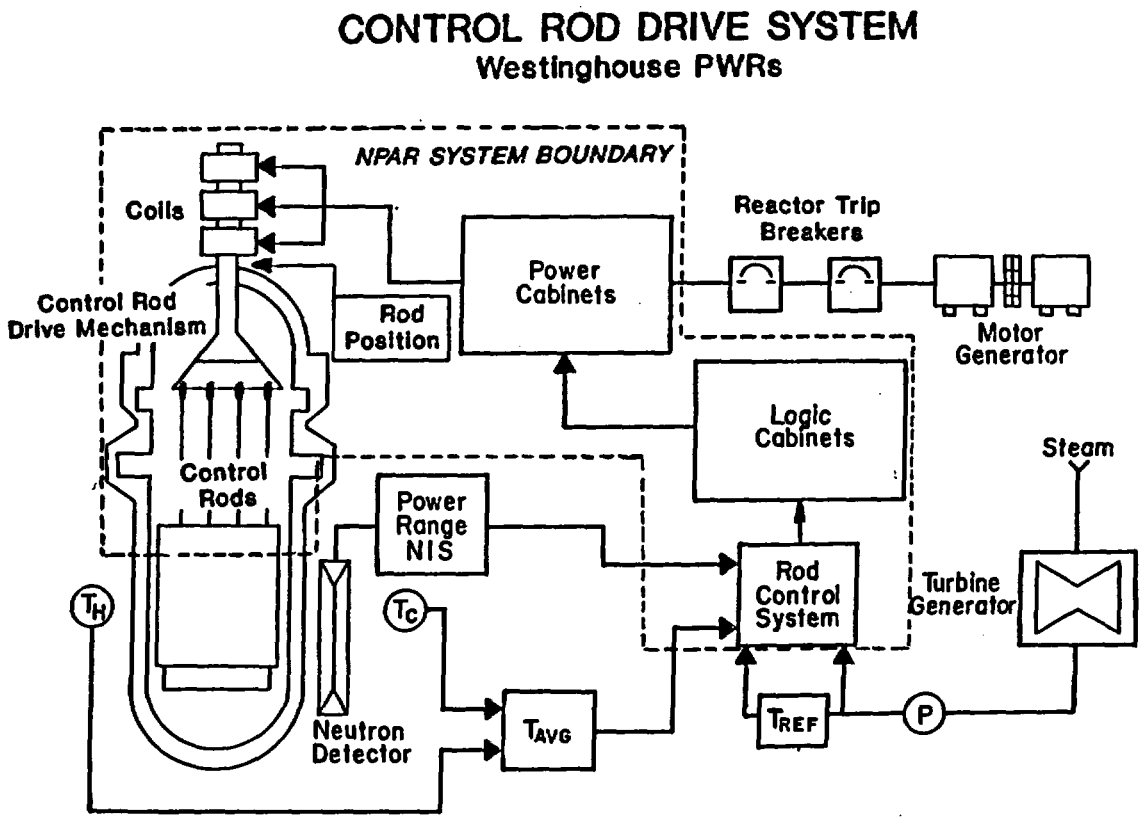

Figure 1.2 CRD system boundary

Also shown in Figure 1.2 is the close interface of the CRD system with the reactor protection system (RPS). Power is supplied from motor generator sets and two reactor trip circuit breakers arranged in series. The reactor protection system logic causes the reactor trip breakers to open, thereby interrupting power to the CRDM coils, that releases the control rods to fall by gravity into the core, which shuts down the reactor. Because other NPAR studies, such as NUREG/CR-4740 address the reactor protection system and instrumentation and controls, the reactor trip breakers and the RPS sensors and logic are not included in this evaluation.

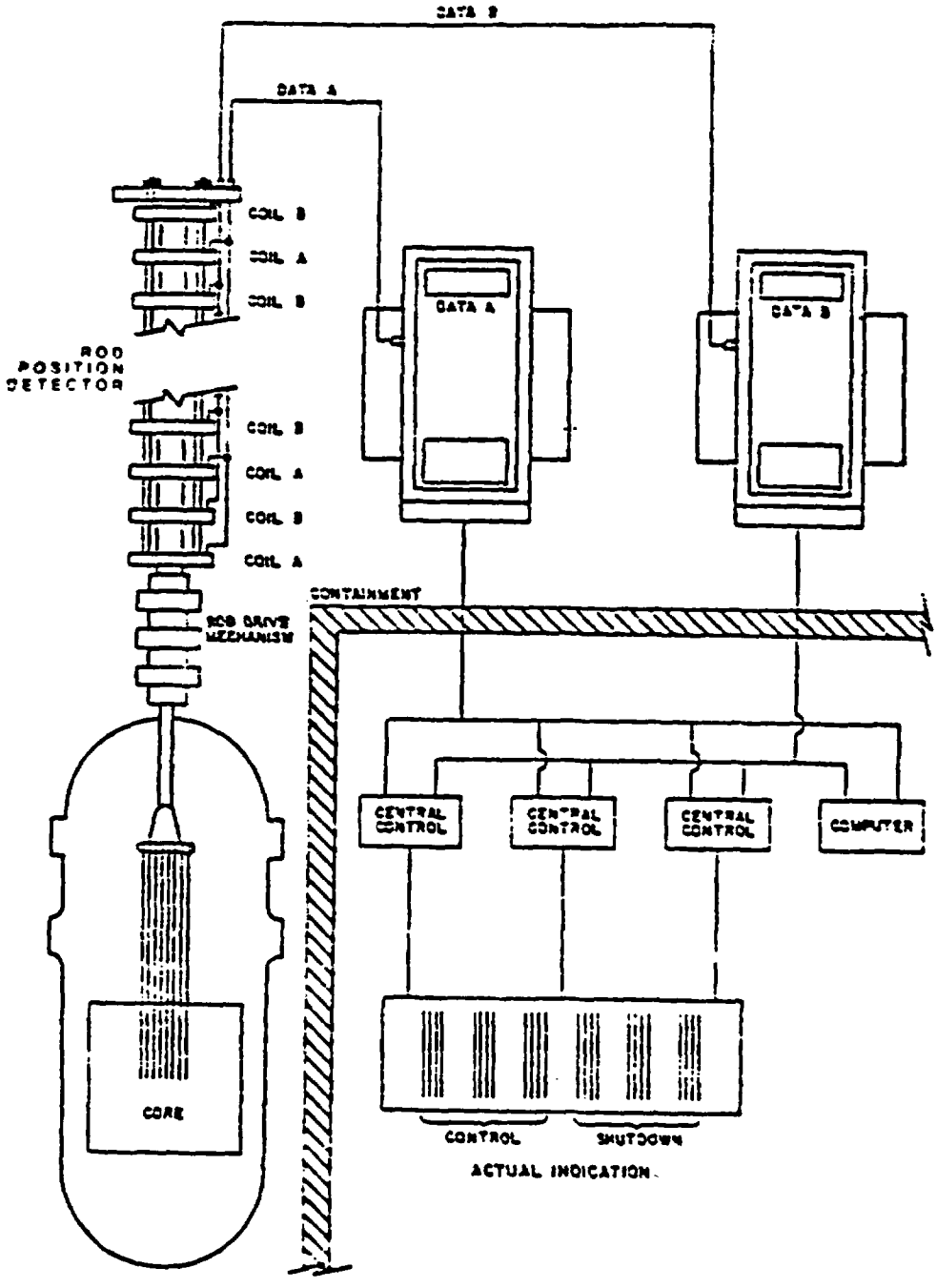

Figure 1.3 Rod position information system

1.4 Analysis Methodology and Format of the Report

Once the system boundary was established, a detailed study of the system components was made. The operating characteristics of the system, materials of construction, and design function must be understood. Material from Final Safety Analysis Reports (FSARs), technical reports, and system descriptions provided background for this portion of the study. Section 2 and Appendix A contain information on the design for all of the important CRD system components.

The impact that operating demands and the environment have on control rod drive system performance is evaluated in Section 3. The influence of required testing is considered along with more obvious factors, such as cyclic wear, high temperatures, and accident conditions. This segment of the study establishes the dominant stresses responsible for aging-related degradation of the system.

A detailed analysis was performed using various data bases which provide the actual operating experience of the CRD system:

- Nuclear Plant Reliability Data System (NPRDS)
- Licensee Event Reports (LERs)
- Nuclear Power Experience (NPE)
- Plant Specific Failure Data
- Survey of 15 Westinghouse plants

Section 4 contains the majority of the data analysis, providing comprehensive results on the dominant failure modes, mechanisms, causes, and effects. The effects of degradation and failure of components on the system and plant levels reported in these data bases are presented. Appendix B of this report summarizes the LERs used.

The design review and operating experience assessment are combined into a failure modes and effects analysis (FMEA). Reduced to the subcomponent level, the FMEA summarizes the component failures which lead to system or plant level effects, and qualitatively ranks the potential of the event. This approach is discussed in Section 5.

An important aspect of the phase 1 study is the development of inspection, surveillance, monitoring, and maintenance (I,S, M&M) techniques with potential to detect and mitigate the effects of aging. Section 6 of this report presents the results of an industry survey, which emphasizes current utility (I,S,M&M) practices for the Westinghouse control rod drive system. The questionnaire developed for this survey is included as Appendix C. This study also examines and analyses the effectiveness of the existing regulatory requirements for testing and inspection, and presents several commercial techniques applicable to monitoring of the CRD system. These techniques vary due to the different types of materials and equipment in the CRD system.

The Westinghouse supplied control rod drive system has been the subject of study by industry and the NRC. Section 7 discusses those studies which provided insights related to the goals of the NPAR Program. From industry's point of view, the emphasis for research has been on reliability analysis and plant life extension. The NRC's research and experience have been associated with the interaction of the CRD mechanism with the nuclear fuel and the analysis of certain significant operating events. The conclusions and recommendations of this report are in Section 8.

2. DESIGN REVIEW OF THE CRD SYSTEM

2.1 Introduction

Overall control of reactivity in a Pressurized Water Reactor (PWR) is accomplished by two independent systems; the Control Rod Drive System (CRD) and the Chemical and Volume Control System (CVCS). The CRD System positions clusters of neutron absorbing control rods within the core in response to demand signals generated by the reactor operator and reactor control system. In addition to executing a plant startup, this system controls relatively rapid changes in reactivity such as those encountered during plant load variations, and provides a sufficient source of negative reactivity to assure a rapid shutdown of the reactor (scram). The physical relationship between control rods and their associated drive mechanisms to other internal components of a typical 4-loop Westinghouse reactor is illustrated by Figure 2.1.

Although not included in the scope of this report, the CVCS controls the more slowly occurring changes in reactivity, such as those due to fuel depletion buildup and decay of fission products, by regulating the quantity of a soluble neutron absorber (boric acid) in the Reactor Coolant System (RCS).

This section also provides a basic, block diagram of the Westinghouse CRD system. More detailed discussions of certain important equipment, such as a description of the design of the rectifier circuits of the power cabinet are presented in Appendix A.

The block diagram of Figure 2.2 shows that the Westinghouse CRD system is composed of four major systems:

- **Rod Cluster Control Assemblies:**

Each Rod Cluster Control Assembly (RCCA) consists of several individual absorber rods connected at one end to a common hub and positioned within fuel assembly guide thimbles by a dedicated drive mechanism.

- **Control Rod Drive Mechanisms:**

Electro-magnetic jack mechanisms control the movement of RCCAs in response to command signals received from the rod control system. Only the 'full-length' mechanisms are described, since the 'part-length' are not used.

- **Rod Control System:**

Electrical power and signal conditioning and control circuits within the Power and Logic Cabinets regulate the operation of the CRDM in response to demand signals generated by the reactor operator or reactor control system.

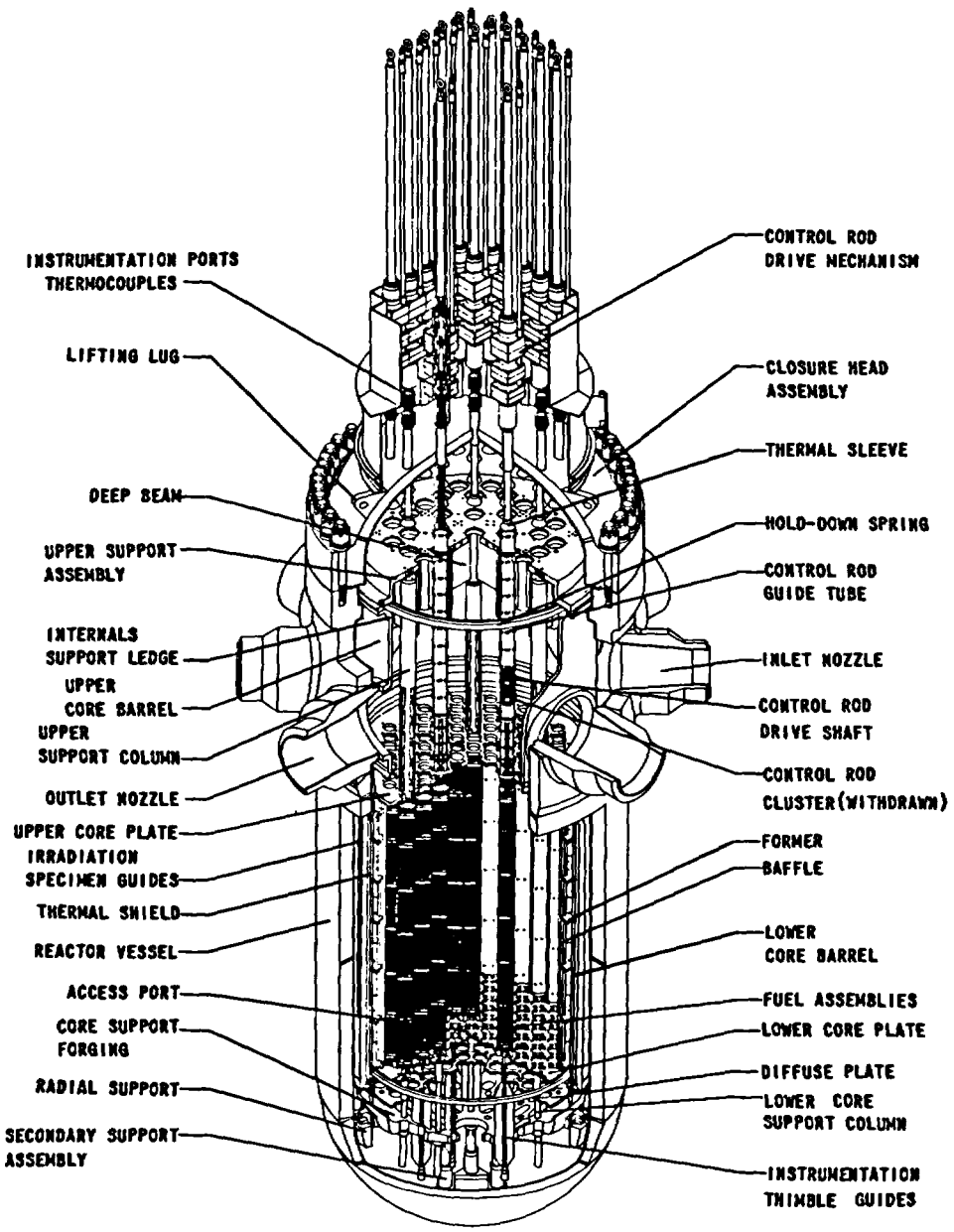

Figure 2.1 Westinghouse PWR[3]

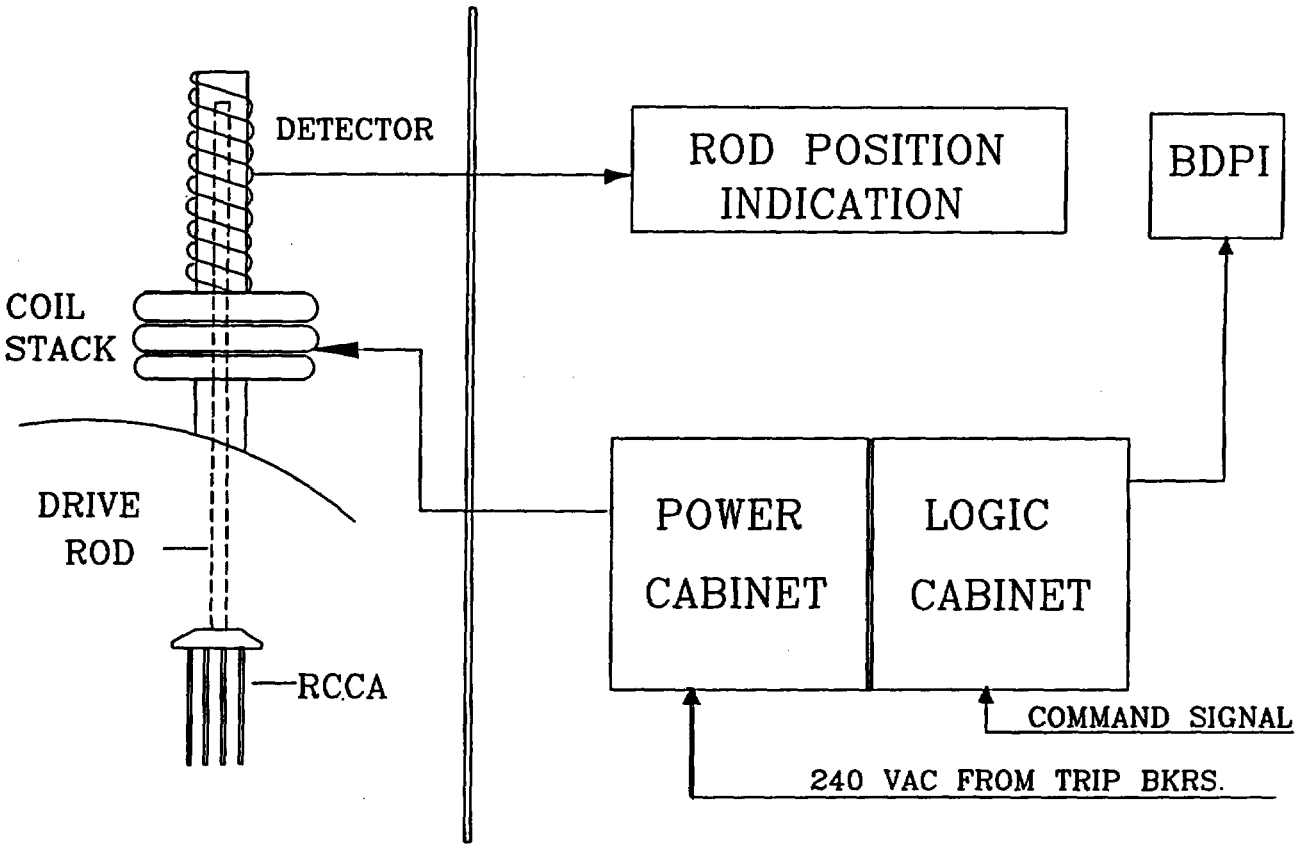

Figure 2.2 Block diagram of the CRD system

- **Rod Position Indication Systems:**

Actual rod position information is displayed on the Individual Rod Position Indication System with an "inferred" indication of rod position provided by the Bank Demand Position Indication (BDPI) System.

2.2 Rod Cluster Control Assemblies

Rod Cluster Control Assemblies (RCCA), are comprised of several absorber rods. As depicted by Figure 2.3, the individual rods or 'rodlets', are fastened at the top end to a common hub or 'spider' assembly. The overall RCCA length is such that when the assembly is fully withdrawn the tip of the individual absorber rods remain engaged in their mating fuel assembly guide thimbles. Therefore, alignment between the rods and guide thimbles is always maintained. The most widely used material for control rod absorbers is an alloy of 80% silver, 15% indium, and 5% cadmium (Ag-In-Cd). The absorber material is in the form of extruded rods that are sealed in Type 304 Stainless Steel tubes. The bottom portion of each rod is "bullet-nosed" to reduce hydraulic drag and to permit the rod to travel smoothly into the dashpot section of the guide thimbles during a reactor trip.

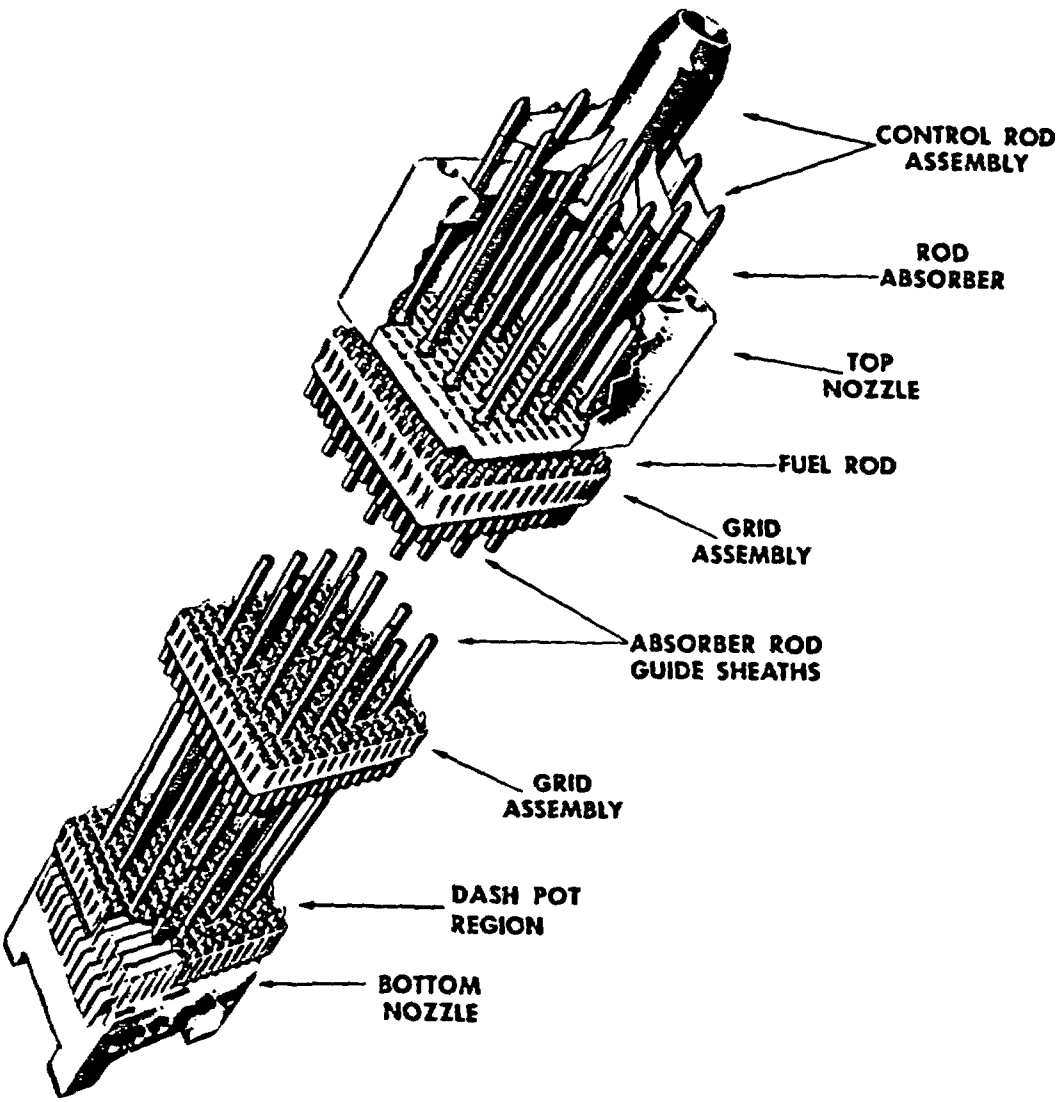

Figure 2.3 Rod cluster control assembly[5]

The spider assembly, illustrated in Figure 2.4, is a central hub with radial vanes containing cylindrical fingers from which the individual absorber rods are suspended. The radial vanes and cylindrical fingers are joined to the hub by brazing. Handling grooves and internal grooves for coupling to the drive rod assembly are machined into the upper end of the hub. A coil spring inside the spider assembly absorbs the impact energy of the rod as it drops. The individual absorber rods are threaded into the spider fingers and pinned; these pins are then welded in place. In newer plants, a mechanical lock may exist instead of a weld allowing easier replacement of individual rodlets.

Control Rod Guide Tube (CRGT) assemblies shield and guide the RCCA above the core. They are fastened to the upper support and are guided by pins in the upper core plate for proper orientation and support. In the lower portion of the CRGT, sheaths and split tubes provide continuous lateral support for the control rods between approximately 22 and 40 inches above the upper core plate[4]. Above this region of the CRGT, guide plates provide intermittent lateral support for the control rods. Additional guidance for the drive rods of the control rod drive mechanisms is provided by the upper extension of the guide tube which is attached to the upper support. The variations in the designs of the CRGT were found to be dependent on the upper internals design.

2.3 Control Rod Drive Mechanism

The Control Rod Drive Mechanisms (CRDM) are located on the dome of the reactor vessel and are mechanically coupled to their associated RCCAs located directly below. The primary purpose of the CRDM is to physically position the rod cluster control assemblies within the core in response to electrical current command pulses generated by the rod control system.

The CRDM is a magnetically operated jack, which contains an arrangement of three electromagnets that are energized in a controlled sequence to lift, hold, or insert an associated RCCA within the reactor core. Figure 2.5 shows a complete CRDM, which consists of the following four major subassemblies: (1) Pressure Housing, (2) Latch Assembly, (3) Drive Rod Assembly, and (4) Operating Coil Stack Assembly. Each CRDM is independent and can be separately dismantled or assembled.

- **CRDM Pressure Housing**

  The pressure housing forms part of the pressure boundary of the reactor coolant system and mechanically supports the latch assembly, operating coil stack assembly and the rod position detector assembly. All moving parts of the CRDM located within the pressure housing are completely immersed in the reactor coolant and rely on it for lubrication. The pressure vessel assembly is fabricated from non-magnetic Type 304SS and completely encloses the drive rod and latch assemblies of the CRDM.

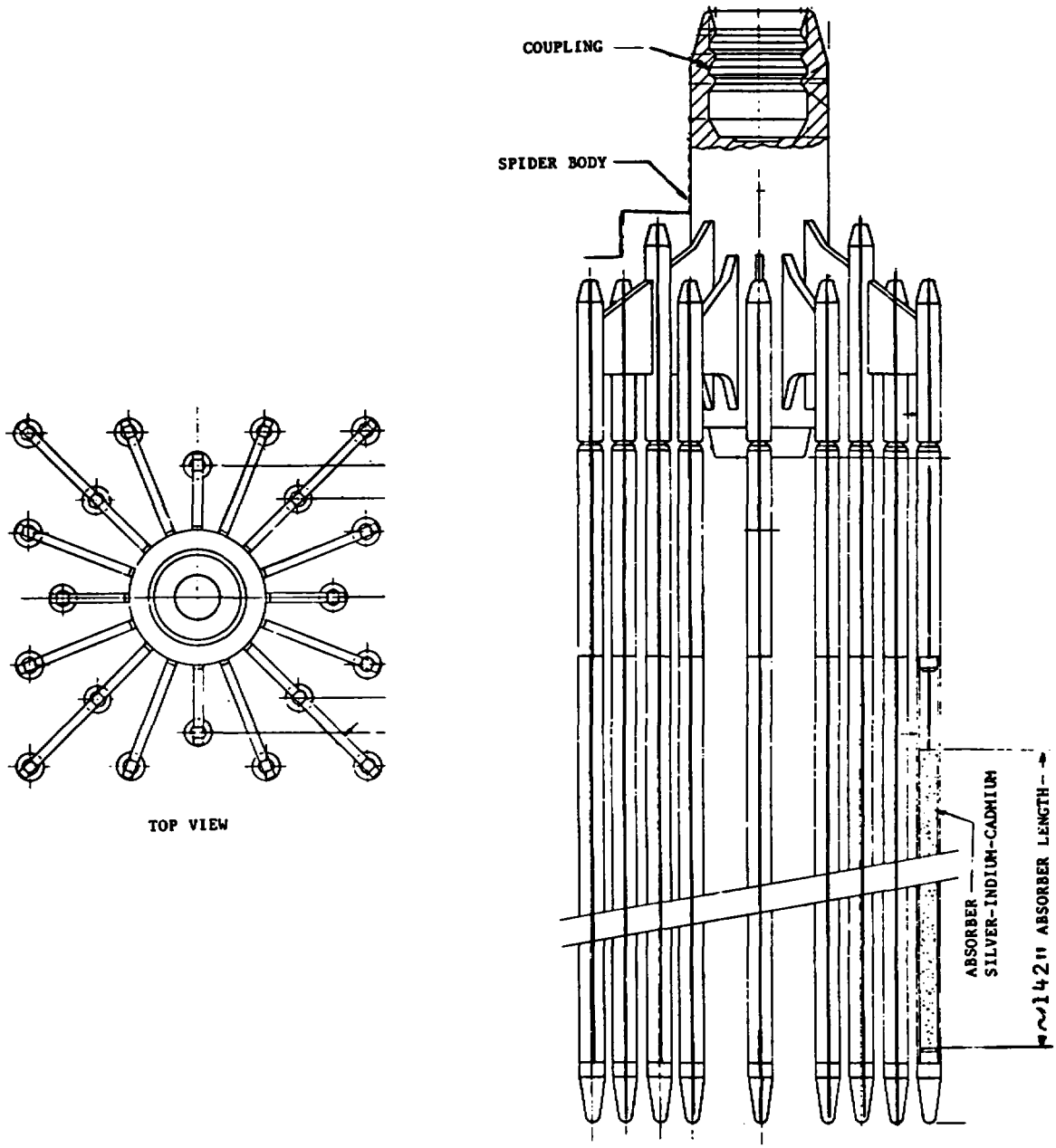

Figure 2.4 RCCA spider assembly[5]

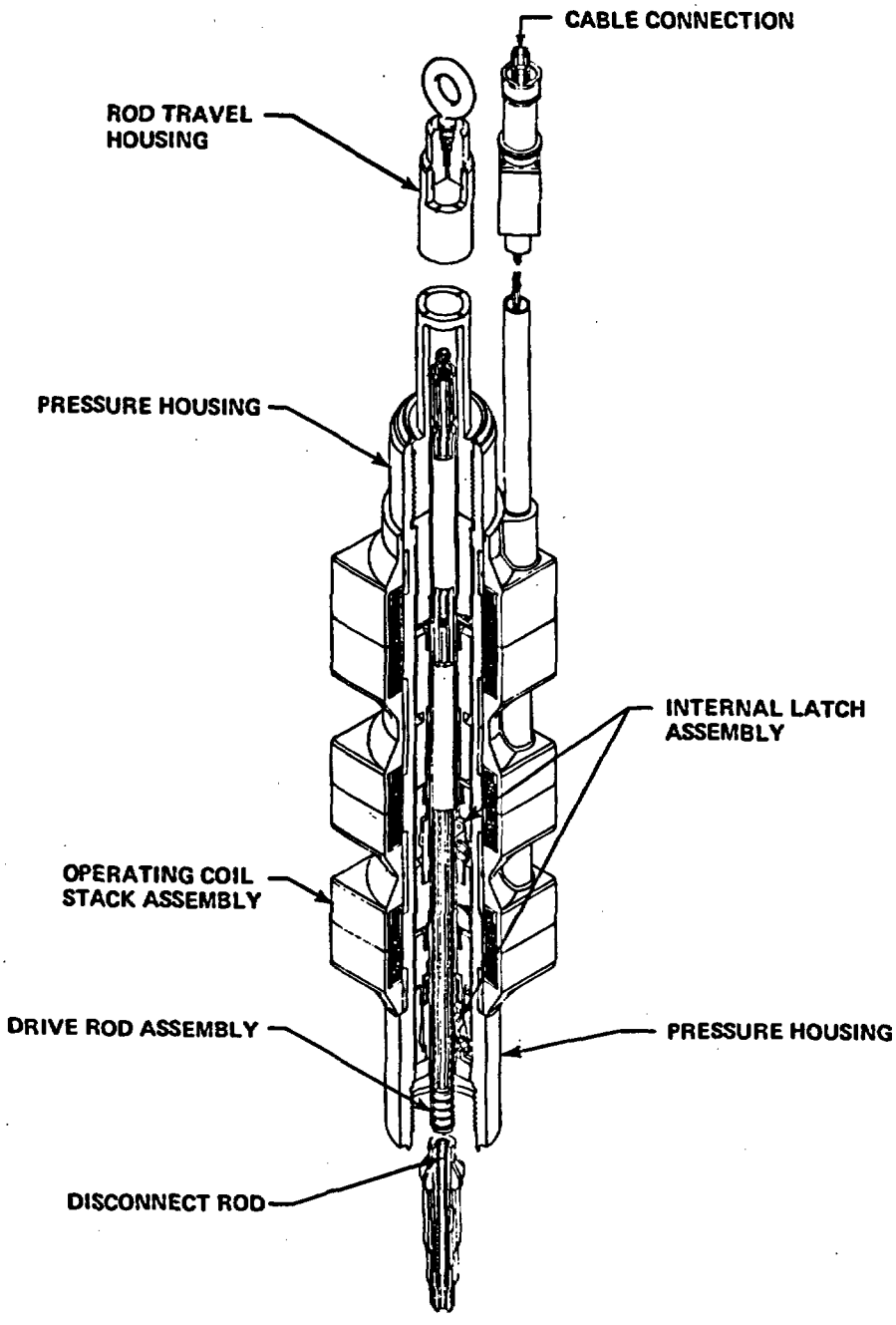

Figure 2.5 CRDM[5]

The pressure housing consists of two subassemblies; a latch housing and a rod travel housing which are connected by a threaded, seal-welded maintenance joint. The latch housing is the lower portion of the pressure housing and contains the latch assembly. The latch housing is threaded and seal welded to penetrations located on the top of the reactor pressure vessel. The rod travel housing is the upper portion of the pressure vessel and provides space for the control rod drive shaft during its upward movement as the RCCA is withdrawn from the core.

- **Coil Stack Assembly**

  The coil stack assembly includes a coil housing that is zinc-plated, ductile cast iron, electrical conduit and connector, and three electro-magnetic operating coils: the stationary gripper coil, the movable gripper coil, and the lift coil. The coil stack assembly is a separate unit which is installed on the CRDM by sliding it over the outside of the latch housing. The assembly rests on the base of the latch housing without mechanical attachment and can be removed when the reactor is pressurized.

  Two lead wires per coil are carried through a conduit to the top of the pressure housing,where they terminate in a single six-pin electrical connector. For proper operation, the magnetic polarity of each coil must be the same. Energizing the operating coils creates a magnetic flux field. This flux passes through the non-magnetic,stainless steel latch housing and couples with the magnetic steel poles of the latch assembly. Sufficient force to move the latch vertically is obtained in a manner similar to a solenoid coil and plunger.

- **Latch Assembly**

  The latch assembly is located in the lower portion of the pressure housing, and it contains fixed and movable magnetic pole pieces which actuate two sets of gripper latches: the stationary and movable grippers. Each set of gripper latches contains three latches positioned 120° apart. The gripper latches are linked to the pole pieces so that movement of the pole pieces causes the grippers and latches to cam in or out, engaging the drive rod, which passes through the latch assembly.

- **Drive Rod Assembly**

  The drive rod assembly connects the RCCA with the latch assembly and is mechanically coupled to the RCCA spider during reactor operation. The drive rod has a series of zero pitch, circumferential grooves spaced at 5/8-inch intervals, which permit the attached RCCA to be positioned at any location within the core at 5/8-inch intervals or "steps". The total travel of the control rod is 142.5 inches or 228 steps. Several older plants have steps at 3/8-inch intervals.

  A coupling, located at the lower end of the drive rod, attaches to a mating coupling of the RCCA spider. A disconnect rod, locking button, and disconnect button couple and uncouple the drive rod to the RCCA during installation and refueling.

- **CRDM Cooling System**

  The CRDM cooling system supplements the normal containment cooling system. It consists of fans and associated ductwork so that ambient air in the containment is drawn through the CRDM shroud and ejected back into containment. While not considered part of the CRD system's boundary, the cooling system is briefly described here because of its effects on the aging of the CRDM.

  Typically, four fans provide an air flow of 40,000 to 70,000 CFM; two or three fans are sufficient to provide the required air flow with the remaining serving as redundant units. Some plants cool the air with cooling coils after it is drawn through the shroud, while others discharge the air directly into the containment.

  Though this system is non-safety related, each fan is normally supplied from a safety-related power source. The fans are controlled and monitored from the control room. At most plants, the temperature of the discharge air is monitored at both the shroud and fans, and an alarm occurs upon detection of a high temperature. Vibration, smoke, and the operational status of each fan also are monitored.

2.3.1 Operation of the CRDM

The stationary, movable, and lift coils of the operating coil stack assembly are energized and de-energized in a controlled sequence by solid state switching devices located in the rod control system power cabinet. The sequential operation of the three electro-magnetic coils induces a magnetic flux field through the wall of the pressure housing which then causes the stationary and movable internal latching mechanisms and a lifting pole to operate. Each sequential operation of the CRDM produces an incremental step motion of 5/8" (insertion or withdrawal) of rod travel. A detailed description of a CRDM's stepping sequence is in Appendix A.

During normal, steady-state plant operation, a CRDM holds its attached RCCA withdrawn from the core. In this mode only one coil, the stationary gripper coil, is energized. The drive rod assembly and attached RCCA are supported by the three stationary gripper latches. Electro-magnetic forces are required to hold an RCCA in this position, while rod insertion is accomplished by the force of gravity acting on the weight of the assembly. Therefore, the CRDM will hold the RCCA in this position until either a stepping sequence is initiated by the rod control system, or an interruption in the electrical supply power causes the RCCA to fall, by gravity, into the core. The total insertion time of an RCCA from a fully withdrawn position is approximately 2.2 seconds. The exact time depends on the type of fuel and RCCA absorber.

2.3.2 Arrangement of the CRDM

A typical, 4-loop Westinghouse PWR employs 53 full-length RCCAs with the movement of each controlled by a dedicated CRDM. The 53 CRDMs are divided into two main divisions or "banks", with each bank further divided into one or two "groups", each containing several RCCAs. Figure 2.6 shows the arrangement of the CRDM banks and groups of a typical 4-Loop Westinghouse plant. In this example, the CRDMs are divided into eight symmetrical banks consisting of four shutdown banks (designated Shutdown Bank A, B, C, and D) and four control banks (designated Control Bank A, B, C, and D). Each shutdown or control bank is further divided into one or two groups, Group 1 or Group 2. Each group may have two or more CRDMs that are electrically paralleled to step simultaneously.

During plant startup the shutdown banks are first moved manually to the fully withdrawn position. In this mode, they provide a readily available source of negative reactivity if an immediate plant shutdown (reactor trip) is required.

The control banks provide reactivity compensation during plant startups and power changes and are the only rods that can be moved automatically. The operator can select any single bank of shutdown or control rods for manual operation. A bank is selected by a single switch, therefore, the operator can not select more than one bank (shutdown or control) for manual operation.

2.4 Rod Control System

To obtain the desired position of RCCAs' within the core, demand signals generated by the reactor operator or the reactor control system, are fed to the rod control system which then supplies electrical power command pulses of the proper magnitude and sequence to the CRDM operating coils. During steady state, full power operation the control rods are normally held fully withdrawn from the core, and the primary purpose of the rod control system is to regulate core reactivity which is required to maintain a programmed value of average temperature in the reactor coolant system.

Two types of design for the rod control system are currently used at Westinghouse PWRs. A few older facilities, typically those plants constructed before R.E. Ginna, are configured with an electro-mechanical rod control system. In this design the required sequencing signals for CRDM operating coil power signals are derived by an electrically driven motor and cam operated switch assembly.

The larger core size, which evolved in more recent Westinghouse PWR designs demands that the CRDMs can move heavier RCCAs faster. The newer mechanisms, however, also imposed a corresponding increase in the operating requirements of the rod control system. The additional design requirements exceeded the capability of the electro-mechanical rod control system and, therefore, a new design evolved,employing solid state electronic switching devices.

The solid state rod control system is used in the majority of currently operating Westinghouse PWRs, and therefore, it is the focus of discussion. Additionally, it should be noted that the operational characteristics and component descriptions presented in this report are primarily based on the design of a 4-loop Westinghouse plant. The basic design concepts, however, are essentially identical in all current generation Westinghouse 2, 3, and 4-loop PWRs, varying only in the number and arrangement of certain components.

2.4.1 Description of Rod Control System Equipment

Figure 2.7 is a block diagram of the solid-state rod control system for a 4-loop Westinghouse PWR. It shows that the Rod Control System consists of circuitry associated with the power to the CRDM coils and the logic for controlling rod motion. This section provides an overview of the operating characteristics of the major equipment and discusses its relationship to the operation of the rod control system.

CRDM BANK	GROUP	CRDMs/GROUP
SHUTDOWN A	GROUP 1	4
	GROUP 2	4
SHUTDOWN B	GROUP 1	4
	GROUP 2	4
SHUTDOWN C	GROUP 1	4
SHUTDOWN D	GROUP 1	4
CONTROL A	GROUP 1	4
	GROUP 2	4
CONTROL B	GROUP 1	2
	GROUP 2	2
CONTROL C	GROUP 1	4
	GROUP 2	4
CONTROL D	GROUP 1	4
	GROUP 2	5

Figure 2.6 Arrangement of CRDM banks and groups

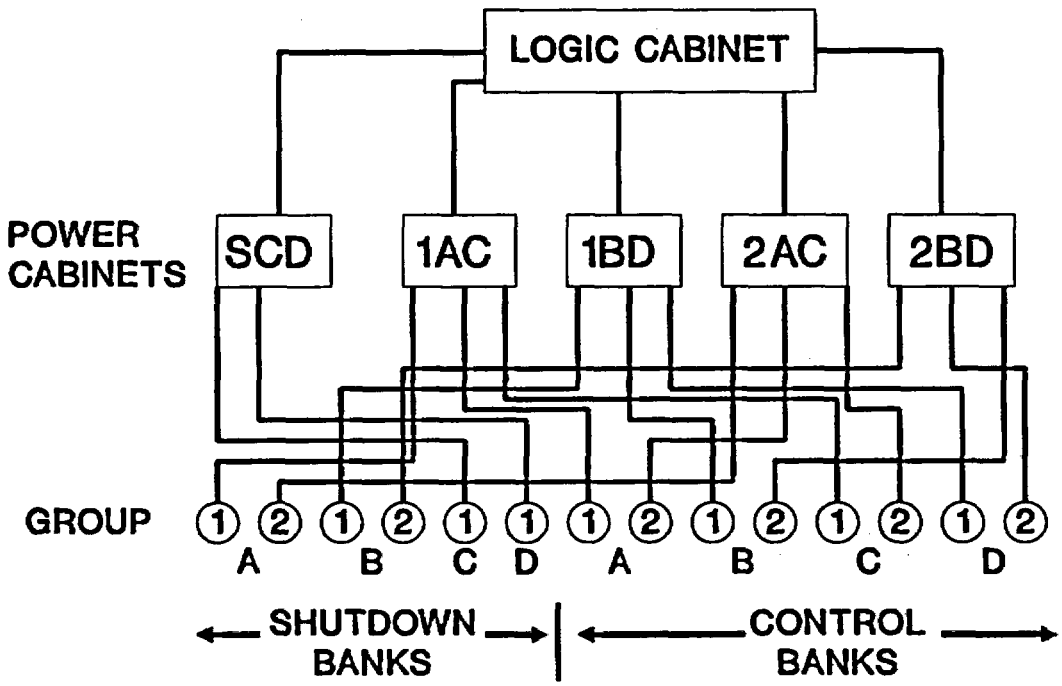

Figure 2.7 Block diagram of the solid-state rod control system

- **Electrical Power Distribution**

  Three-phase, 260V electrical power is supplied to the rod control system by two synchronous type Motor-Generator (M-G) sets rated at about 500 KVA. Either M-G set is capable of fulfilling all power requirements; however, the two are normally operated in parallel.

  Power from the M-G sets is distributed to the power cabinets through two series connected reactor trip breakers. To facilitate on-line testing of the reactor protection system, by-pass breakers may be installed in parallel with the reactor trip breakers. Power to each of the five power cabinets is supplied from the reactor trip breakers through fused disconnect switches.

- **Power Cabinets**

  The power cabinets contain solid-state electronic equipment, which converts the 260V, three-phase a-c supply power to a d-c current suitable for CRDM coil operation. (This conversion process, called controlled rectification, is described in Appendix A).

  As shown in Figure 2.7, a typical 4-loop facility employs five separate, steel enclosed power cabinets that are designated SCD, 1AC, 1BD, 2AC, and 2BD. The electronic circuitry in each cabinet is functionally identical. In addition, each cabinet can supply up to three groups of rods with each group consisting of up to four RCCAs.

  With the exception of Power Cabinet SCD, the letters in the power cabinet designation refer to the particular banks which the cabinet is driving. The number defines the group associated with each control bank. For example, Power Cabinet 1-A-C drives the Group 1 rods of Shutdown Bank A, Control Bank A, and Control Bank C. The SCD designation means that Shutdown Banks C and D are associated with that cabinet.

- **DC Hold Cabinet**

  A failure in the power cabinet may require replacing a printed circuit card, thyristor, fuse, or other component. To avoid dropping rods during such maintenance, and to preclude the need of an external power source, each power cabinet is equipped with three OFF-LATCH-HOLD switches, which connect an alternate supply of dc voltage that is produced in the DC Hold Cabinet, to any one of the three groups of stationary gripper coils. The DC Hold Cabinet contains three dual voltage 125/70V d-c power supplies.

  Power to the DC Hold Cabinet is taken downstream of the reactor trip breakers so that rods being held by the cabinet during maintenance will still drop on a reactor trip. Each d-c supply consists of a three-phase transformer and a full-wave, three-phase rectifier bank. Indicating lights are provided on the cabinet for monitoring the input and output voltages.

- **Logic Cabinet**

The logic cabinet contains all the circuitry for low level electronic signals which are necessary to develop the switching signals required for proper operation of the power cabinets. The switching signals developed by the logic cabinet are generated in response to command signals received from the reactor operator or the reactor control system.

As depicted by Figure 2.8, the logic cabinet is comprised of the following major subassemblies: (1) pulser, (2) a master cycler, (3) a bank overlap unit, (4) slave cyclers, and (5) the shutdown bank C and D control. A detailed discussion of each subassembly is Appendix A.

The design of the logic cabinet uses solid state integrated circuits, mounted on plug-in printed circuit cards. Relays required to drive equipment that is external to the system, such as the plant computer, annunciators, and bank demand position indication equipment, are also located in the logic cabinet.

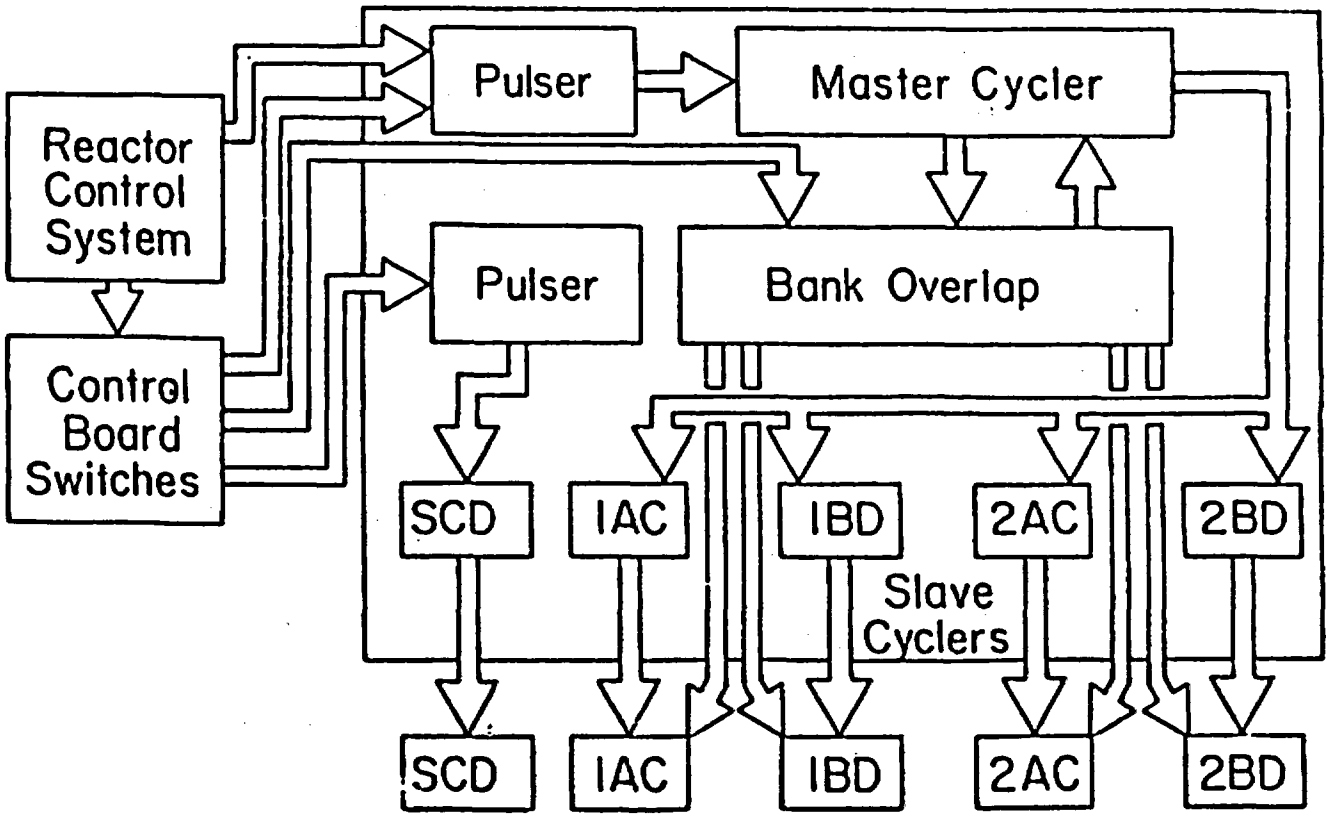

Figure 2.8 Block diagram of the logic cabinet

2.4.2 Rod Control System Alarms

The rod control system has an internal failure monitoring system. Depending on the severity and location of the failure, the monitoring system will initiate either an urgent or a non-urgent alarm. Failures that generate an urgent alarm affect the system's ability to control rod movement. Non-urgent failures involve failures of redundant power supply modules which do not immediately affect operation, but compromise the system's ability to respond to further malfunctions or losses. Table 2.1 lists failures in the power and logic cabinet which generate an urgent failure alarm, and shows their possible causes.

Upon detecting an urgent failure within the power cabinet, the failure detection logic overrides all current orders from the logic cabinet and, to prevent dropping rods, orders low current on all movable and stationary grippers assigned to the faulty cabinet. In addition, all rod motion from the affected power cabinet is automatically stopped, the annunciator, "ROD CONTROL SYSTEM URGENT FAILURE", alarms on the main control board, and a local, red indicator light is illuminated on the front of the affected cabinet.

Non-urgent failures in a power cabinet may occur upon the loss of any one of four d-c power supply modules (main and auxiliary +24 and -24V d-c). If only one of each redundant pair fails, the other will continue to supply the cabinet's d-c circuits through a blocking diode arrangement. Upon detection, however, the failure will energize the annunciator of the control board "ROD CONTROL SYSTEM NON-URGENT FAILURE", and will also illuminate a local failure alarm. Non-urgent alarms reset automatically as soon as the malfunction is corrected.[6]

The logic cabinet also has an internal failure monitoring system. As described for the power cabinet, the monitoring system will generate either an urgent or non-urgent alarm, depending on the severity and location of the failure.

2.5 Rod Position Indication Systems

Westinghouse PWRs have two independent systems to monitor the position of control rods within the core: an Individual Rod Position Indication System (IRPI), and a Bank Demand Position Indication System (BDPI). The information provided by the IRPI system is derived from detectors that are physically mounted on each CRDM and, therefore, represents the actual position of each RCCA within the core. The rod position indication from the BDPI system, however, is determined by a count of the number of steps of rod motion that has been demanded by the Rod Control System. As a slave cycler in the logic cabinet completes a step, a signal is sent to cause movement of a mechanical add/subtract counter on the control board for that group of rods. The rod position information displayed on the BDPI, therefore, is highly accurate but represents the position that a group of rods should assume rather than their actual position. The information provided by both the IRPI and the BDPI systems is displayed on the main control board and is monitored by the plant computer as part of the program for monitoring rod deviation.

Table 2.1 Power and logic cabinet urgent failures[7]

A. Power Cabinet Failures	Cause
1. Regulation Failure	Detects that the coil current does not match the current order within a preset time, OR a full current command signal is on too long. The detection of this type of failure protects against dropped rods (in the event the system becomes incapable of regulating the required coil current),and also protects against overheating the coil if a slave cycler fails and calls for continuous current.
2. Phase Failure	Senses the level of a-c ripple on the voltage to the coils. An excessive level of a-c ripple on the d-c output voltage would indicate a failure had caused one of the three phases of a-c supply voltage to be processed differently. Possible causes of a phase failure include a failed thyristor, blown fuse, or a loss of thyristor gate control.
3. Logic Error	Detects the simultaneous loss of current command signals to the stationary and movable gripper coil circuits. This detection protects against dropping rods, however,the detection must occur and the automatic corrective action must be completed before the bridge thyristors could cut the current to zero.
4. Multiplex Error	Senses that a lift coil or movable multiplex thyristor has failed by detecting a current in the movable or lift coils of any rod or group of rods not selected by the multiplex function. This failure mode could energize more than a single detected group of CRDMs.
5. Loose or Missing Printed Circuit Card	Checks for current continuity.
B. Logic Cabinet Failures	
1. Pulser Failure	Detects the failure of the pulser to generate pulses when signaled.
2. Slave Cycler Input Failure	Slave Cycler receives a "GO" signal before completing the previous step.
3. Loose or Missing Printed Circuit Card	Checks for circuit continuity.

2.5.1 Individual Rod Position Indication System

The Individual Rod Position Indication (IRPI) System continuously senses and displays position information for each rod. Either an analog or digital type of system design may be employed. Both designs are briefly discussed in this section.

2.5.1.1 Analog IRPI System

- **Rod Position Detector**

  In the analog type of IRPI system, shown in Figure 2.9, the primary sensor is a linear transformer type of detector, which is concentrically mounted outside the CRDM rod travel housing (upper portion of pressure housing). The detector consists of alternately stacked primary and secondary coil windings. The control rod drive shaft acts as the armature of the transformer. The primary coil winding excitation is 118 ± 2.0 VAC with a current of 450 ± 100ma. The amount of magnetic coupling between the primary and secondary windings is proportional to the vertical position of the top of the control rod drive shaft within the rod position detector. With the rod drive shaft fully inserted, the magnetic coupling between the primary and secondary coils is small, and the signal induced in the secondary windings also is small. As the rod is withdrawn from the core, the relatively high permeability of the drive rod increases the magnetic coupling between the primary and secondary windings, which induces an increasingly larger signal voltage in the secondary winding with each step that the drive shaft is withdrawn. The resulting output voltage from the secondary windings is an a-c signal, whose amplitude is proportional to the rod's position. This signal is processed and displayed through the actions of several functional blocks.

- **Signal Conditioning Module**

  The detector output voltage is transmitted to a signal conditioning module which rectifies the ac signal into a 0 to 3.45 Volt d-c signal required to drive the control board indicator and plant computer. The module has adjustments to calibrate the channel, and a test-operate switch, to check the operation of the electronic circuitry.

- **Rod Bottom Bistables**

  The rod bottom bistables are simple level detectors which are used to alarm and indicate the dropping of a rod below a predetermined position. The bistable output operates a control relay which generates the ROD BOTTOM ROD DROP alarm. The bistable setpoint is adjustable over the lower 25% (0" to 38") of rod travel.

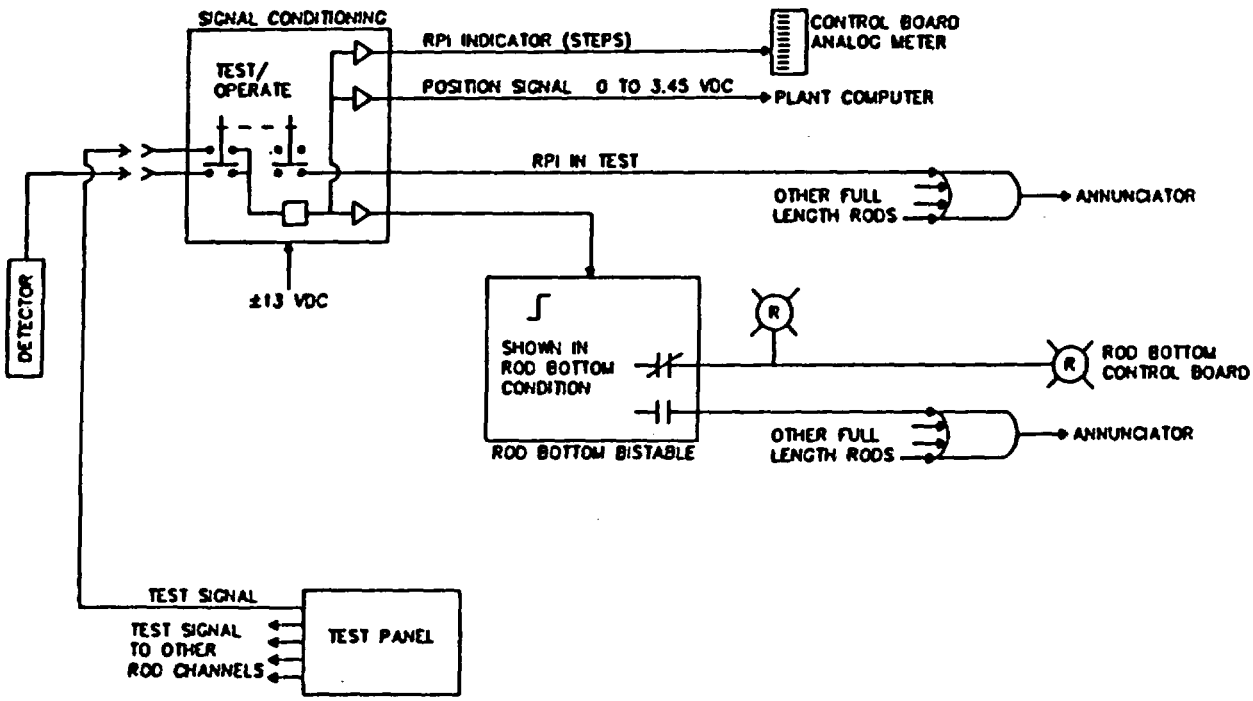

Figure 2.9 Block diagram of the analog IRPI system[8]

- **Test Panel**

  The test panel, in conjunction with the signal conditioning module TEST/OPERATE switch, performs on line testing of all rod position channels and output devices. The test panel supplies a variable a-c test signal (simulated detector output) for checking the operation of the signal conditioning module and the rod bottom bistable. The plant operator is alerted to this channel test by a "RPI IN TEST" control room annunciator.

- **DC Power Supplies**

  Two sets of d-c power supplies, connected in an auctioneered arrangement, furnish the power required by the signal conditioning modules. Failure of any of the four d-c supplies actuates a control room annunciator, "DC POWER SUPPLY FAILURE" and a local indicator lamp.

- **Control Board Position Indicator**

  The control board position indicators show the operator the actual position of each rod. The rod position display is an analog meter calibrated in steps. The indicators are grouped by banks to show to the operator the deviation of one rod with respect to the other rods in a bank. Mounted on the bottom of each indicator is the rod bottom light.

2.5.1.2 Digital IRPI System

The digital IRPI system is an evolution in design of the older analog system described previously. Figure 2.10 is a basic block diagram of this system. Although similar in overall function to the analog IRPI system, its design has several important technical improvements. Probably the most significant feature of the digital system is the design of its detector, which is comprised of 42 discrete coils with coil connections made so that two separate data channels of 21 coils each are formed. Unlike the two winding transformer types of detectors used in the analog IRPI system, it is possible to continue to sense the position of a rod on the loss of a single coil.

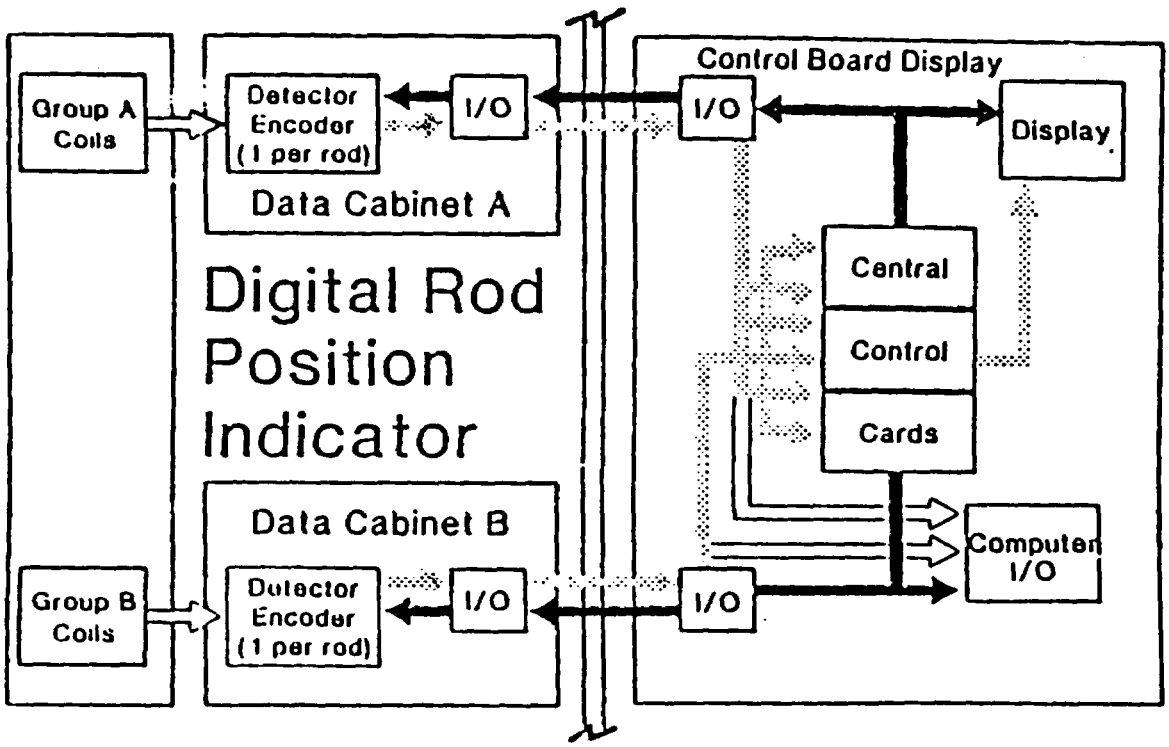

Figure 2.10 Digital rod position indication system - block diagram

- **Detector**

  A rod position detector is supplied for each RCCA. Each detector consists of 42 discrete coils, mounted axially on a hollow, non-magnetic, stainless steel tube and spaced out along its length at 3.75 inch intervals. The hollow tube fits over the rod travel housing (upper portion of the CRDM pressure vessel).

  The coils magnetically sense the entry of the drive rod shaft through their centerlines. Because the drive rod shaft is ferromagnetic it disturbs their magnetic field. When a rod is out of a coil, the voltage across the coil is high; when it is in a coil, the voltage drops.

- **Data Cabinets**

  Two data cabinets are located inside containment and contain solid state signal processing circuitry which is required to detect rod position and transmit this information to the main control board. Within each data cabinet, the coils of the rod position detector are connected to a detector/encoder card, which samples or "detects" the voltage developed across a coil terminating resistor. This analog signal is converted or "encoded" into a digital "binary word" and transmitted to the central control unit.[9]

- **Central Control Unit**

  The central control unit is located in the control board display. This unit controls the operation of a time-division multiplexing technique that reduces the number of cable penetrations into containment where the data cabinets are located.

  The central control card is the one common tie between the two rod position data channels. The central control unit uses three control cards to prevent the loss of system position monitoring on a single failure. If a card's input or output disagrees with the input or output of the other two cards, it disconnects itself from further operation and generates a disconnect alarm. The failure of a single central control card, therefore, does not result in a system failure. In addition to providing control rod position indication, the central control card generates the following four types of system alarm signals which actuate control room annunciators by output relays:

  1. R.P.I. Rod at Bottom

  2. R.P.I. Two or More Rods at Bottom

  3. R.P.I. Urgent Failure (A system failure which results in the total loss of position information for a rod or rods)

  4. R.P.I. Non-Urgent Failure (A system failure which results in the loss of one of the data channels)

- **Control Board Display**

  Digital rod position information is fed from the central control card to a separate display card for each rod. The display card consists of forty light emitting diodes (LEDs) mounted vertically, one above the other, along its front edge. The bottom LED represents the rod bottom position. The next thirty-eight LEDs cover the total range of rod movement (228 steps). Each LED, therefore, actually represents a 6 step (3.75") increment of rod travel. The last, or fortieth LED is for a general warning indication. Only one LED is lit to identify the position of the rod.

2.5.2 Bank Demand Position Indication System

The Bank Demand Position Indication System (BDPI) counts the rod motion command pulses generated in the logic cabinet of the rod control system. This system, therefore, indicates where a control rod group should be, based on the number of insertion or withdrawal steps generated. Since each rod in a group receives the same signal to move, each rod should be at the position indicated by the bank step counter for its group. However, if the rod does not move when demanded, or is dropped, the step counter will not reflect its true position. The BDPI has a high accuracy (± 1 step), but is not very reliable because it is an inferred indication of rod position.

There are fifteen step counters in a group on the operator's console. Each counter has five digits and will indicate the number of 5/8 inch steps demanded of that group. Each counter is driven by three solenoids, one for "up", one for "down", and one for "reset".

3. OPERATIONAL AND ENVIRONMENTAL STRESSES

Operational and environmental stresses can be degenerative forces. Examples of these stresses that a component experiences are vibration, corrosion, service wear, heat, and transient surges in electrical supply voltages. In addition to these stresses, externally induced stresses, such as those caused by abnormal operating conditions, improper or excessive testing, and human errors can accelerate age-related degradation of the component.

Age related degradation mechanisms such as corrosion, mechanical wear, and the breakdown of electrical insulating materials develop as a result of long term exposure of a component to operational and environmental stresses. Such stresses may gradually degrade the component's physical properties or operating characteristics. The failure to identify and correct degradation mechanisms in a timely manner causes failures of components and may impair plant safety. The specific type, number, and intensity of operating and environmental stresses that may be experienced by a particular component are related to the component's function, its physical configuration within the system, and the characteristics of its operating environment. The overall effect that a particular stressor may have on a component primarily depends on the intensity, frequency, and duration of the applied stress, and the endurance limit of the material. In addition, it is important to note that components are subjected to more than one single stressor at any one time. Such stresses tend to act synergistically, having a combined effect that may be greater than the sum of the individual stresses.

This section identifies these degenerative stresses that may act on the major components of the Westinghouse Control Rod Drive (CRD) System. As discussed in Section 2, the CRD system consists of four different subsystems which contain components that are constructed from a wide array of materials, and are operated in a broad range of environmental conditions. Therefore, there may be rather large variations in the number, type, and magnitude of stresses to which an individual component may be subjected. For this reason, Section 3.3 discusses the stresses associated with each of the major system components.

Table 3-1 summarizes the results of an initial evaluation of the specific materials, degradation mechanisms, and potential failure modes of each component. Following this review, an additional examination of each major component was performed to identify potential operational and environmental stresses that, in time, may contribute to developing the degradation mechanisms identified in Table 3-1. The results of this evaluation are presented in Table 3-2; the potential stresses were assigned a relative importance ranking to indicate their overall contribution to the age related degradation of the effected component. This qualitative assessment was based on the review of the experience of the system, and an analysis of the operating principles and design parameters of its major components.

3.1 CRD System Operating Stresses

These stresses have been identified as potential contributors to component degradation within the CRD system:

Cyclic Fatigue

Cyclic Fatigue refers to the repetitive application of an applied force. Such forces may be mechanical, as in the repetitive loading and unloading forces applied to the CRDM gripper latches during rod insertion or withdrawal sequences; or electrical, as in the repetitive on/off electrical forces applied to the CRDM operating coils during rod stepping.

Mechanical Interaction

This operating stress is induced by friction that develops as a result of mechanical contact between two objects. For example, contact between the RCCA and the guide tube during normal operation can result in wear in the upper internals. A reactor trip exposes the RCCA and CRDM to mechanical stresses such as friction and vibration, which are induced by the resulting reactor pressure and temperature transients.

Vibration

Vibration of the components of the CRD system may be generated by several sources, including the force of primary coolant as it flows up through the core. The motion of the CRDM guide tube caused by such vibration deteriorates the RCCA.

Water Chemistry and Debris

This refers to the degenerative forces that a component may experience because of its exposure to impurities in the reactor coolant system . Water chemistry refers to the corrosive nature of the primary coolant in a PWR due to the boric acid that is added to control reactivity. Leaking instrument sensing lines or defective seal welds on CRDM pressure vessels could expose components in their vicinity to the corrosive effects of boric acid present in the primary coolant. Debris in the reactor coolant system can be transported anywhere in the system by the hydraulic forces and become wedged in the CRDM, which causes wear and binding.

Voltage Transients

This stress includes disturbances in the electrical voltage or current supplied to a component that are caused by load changes and electrical system faults.

Maintenance

Maintenance tends to be intrusive, and can rarely be performed without causing some physical disturbance in the system. An example of maintenance routinely performed on the CRD system is the uncoupling and coupling of operating coil stack connectors and cables during refueling outages. This activity may be performed numerous times during the plant's operating life, and contributes to significantly degenerative stresses.

Testing

System performance tests that are performed intermittently, such as rod drop timing tests, subject components to some of the stress experienced during a reactor trip. In addition, the method used for such tests could contribute further to degrading certain system components. For example, removing fuses to provide an open electrical circuit during certain tests induces additional levels of mechanical fatigue in both the fuse and its holder. In time, the additional mechanical stress will cause the electrical connections to loosen. This condition, if undetected, may initiate an unintentional rod drop which results in a reactor trip.

3.2 CRD System Environmental Stresses

The environmental stresses that are considered in this section are temperature, humidity, and radiation. Evaluation of the materials which comprise the major components and the associated operating experience indicates that these environmental stresses affect the performance of the system.

The power and logic cabinets are located in a mild environment. The temperature and humidity are generally monitored and controlled and radiation levels are low. Equipment located in a mild environment is immune from the high radiation or steam and humidity of a harsh environment. The portion of the CRD system located within the containment, and those components located within the reactor pressure vessel boundary, exist in a harsh environment. Their requirements for material design are much more severe than the equipment outside of containment.

Temperature

The dominant environmental stress associated with the CRD system is temperature. Effects of time-temperature aging deteriorate many organic materials. This degradation process has been modeled using a temperature dependent function that follows the Arrehenius equation. The findings from testing performed on electrical power cables, for instance, demonstrated that over a period of several years, high temperatures resulted in oxidation and embrittlement of the polymer, especially in the presence of humidity and radiation.

Even in a mild environment, electrical and electronic equipment of the type used in the logic and power cabinets are susceptible to failure due to increases in ambient air temperatures. Higher temperatures exist in the in-containment portion of the system, especially the cable and connectors and the CRDM itself. Again, the electrical parts of the system are the most prone to aging related degradation due to the effects of temperature in containment, particularly above the reactor pressure vessel head where temperatures may exceed 200°F.

The aging effects that may be attributable to temperatures above 150°F include the following:

- changes in dielectric properties
- embrittlement and hardening of polymers leading to cracks
- change in mechanical strength and properties of jacketing material
- change in chemical properties of lubricants

Humidity

High humidity is considered a second environmental stress for the control rod drive system, especially that portion of the system located inside containment. High humidity can cause changes in cable dielectric properties which reduces voltage withstand capability for the cable or connector. Similarly, this stress increases the amount of leakage current, and can even cause partial surface corona discharge.

Continued exposure to moisture can cause corrosion and dimensional deformation. The portions of the CRD system most likely to be affected by high humidity are the in-containment cables, connectors, and CRDM coils. The failure mechanisms associated with this stress are discussed in Section 3.3.

Radiation

Radiation is generally not considered to be an important aging factor for the control rod drive system equipment located in mild environments. However, within the containment, the radiation environment (predominantly gamma and neutron) must be considered in terms of cumulative dose, dose rate, and radiation hot spots.

The aging effects on the control rod drive system components due to radiation include:

- changes in dielectric properties of polymer
- softening and reduced strength of cable jacket materials
- modification of the crystalline structure of metals

3.3 Component Level Stresses and Degradation

The operational and environmental stresses which are experienced by the control rod drive system can cause age related degradation through several different mechanisms, which vary with the materials used in the component, as well as the level of stress. Information in this section, therefore, focusses on the aging-related degradation which may occur at the component level due to the stresses placed on the system. The degradation mechanisms frequently mentioned in the discussion of the degradation of mechanical component are defined below.

Thermal Embrittlement

Thermal embrittlement, or thermal aging, affects the ductility of Type 304 stainless steel castings. Embrittlement is a function of time and temperature and reduces the fracture toughness (loss of ductility) of the material.

Mechanical Wear

Mechanical wear primarily affects the surface of a component and refers to the degradation which occurs from physical interference, such as rubbing.

Stress Corrosion Cracking

Stress corrosion cracking (SCC) is caused by a high level of tensile stress, chemical environment, and material susceptibility to attack. SCC typically causes the material to become embrittled which reduces ductility.

Fatigue

Fatigue causes a component to deteriorate due to exposure to repeated or cyclic physical forces over time.

3.3.1 Rod Cluster Control Assembly

The Rod Cluster Control Assemblies (RCCA) are positioned within the core to control rapid changes in reactivity during normal plant operation and provide a reactor shutdown (trip) in the event of off-normal plant transients. To accomplish these objectives, the individual absorber rods of each RCCA must be capable of continuous free movement and their cladding must prevent the loss of neutron absorber material. The primary degradation mechanisms of concern for this subassembly, therefore, include those time dependent stresses which could physically interfere with the motion of an RCCA, a breach of control rod cladding integrity, or result in a control rod being inadvertently dropped into the core.

As discussed in Section 2, the major components of the RCCA include the spider assembly and the individual absorber rods. To minimize the effects of their corrosive environment both components are constructed from Type 304 stainless steel. Significant stresses related to this subassembly include vibration, radiation, cyclic fatigue, and friction between this assembly and neighboring components.

- **Individual Absorber Rods**

  The identification of control rod cladding wear at Wisconsin Electric Power Company (WEPCO) Point Beach Units 1 and 2 and the Northern States Power Prairie Island Units 1 and 2 led to an EPRI sponsored study by Westinghouse on the expected lifetime of silver-indium-cadmium control rods[10]. That report described the results of hot cell investigations on three rodlets of an RCCA that were removed from Point Beach Unit 1, and examined the three types of control rod cladding wear that were observed. These include fretting wear, sliding wear, and cracking of the control rod cladding surfaces.

  Vibrations that are developed by the flow of primary coolant up through the core are a leading contributor to age related wear of the surfaces of the control rod cladding. The flow induced vibrations of the RCCA or guide tube cause repetitive contact between the control rod and adjacent guide blocks of the control rod guide tube assembly located in the upper internals of the reactor. The mechanical stress caused by the physical impact of the rod with the guide cards forms localized areas of fretting wear on the cladding surface at points along the length of the control rod. "Fretting wear," was identified in the Westinghouse study as having the most limiting effect on the life of control rods. It primarily occurs during steady state plant operations when the RCCAs are held in the fully withdrawn position for several months. While this aging mechanism cannot be entirely eliminated, it is possible by periodically changing the axial position of the RCCA to distribute the wear along the cladding surface.

"Sliding wear," is caused by individual absorber rods rubbing against guide blocks of the control rod guide tubes during RCCA stepping and trip insertion. This wear is identified by long axial grooves worn into the surface of the absorber rod cladding.

A combination of complex stresses contributes to developing Intergranular Stress Corrosion Cracking (IGSCC) of the cladding. These stresses are caused by 1) mechanical interaction between the absorber and cladding that occurs because the absorber swells from neutron exposure, 2) exposure of the cladding to high levels of radiation, 3) cyclic stresses induced by pressure fluctuations in the primary system , and 4) fatigue of the cladding due to the control rod making contact with fuel assembly guide thimbles.

- **Fuel Assembly Guide Thimble**

When fully withdrawn, the lower tips of the RCCA absorber rods remain engaged in the fuel assembly guide thimble. Fretting wear has been observed on the guide thimble inner surface corresponding to the location of the tip of the absorber rod. The cause of this wear is flow induced vibration. Through wall wear could result in a stuck rod or structural degradation of the fuel assembly. As described in Appendix A, Westinghouse uses two guide thimble designs. The HIPAR design uses stainless steel tubes, as opposed to the Zircaloy tubes used in the LOPAR design. The stainless steel guide thimble, due to its inherently hard surface, is not susceptible to wear as is the Zircaloy tube. Tests conducted to characterize the wear concluded that the wear rate was time dependent and related to the control rod guide tube design.

Westinghouse recommended that the absorber rod position be changed periodically during the fuel cycle to eliminate any preferential wear site.

- **Control Rod Guide Tube Support Pins**

As described in Section 4, control rod guide tube support (or split) pins are used to maintain alignment and support the guide tubes. These split pins are fabricated from Alloy X-750 (Inconel). Stress corrosion cracking failures have been reported, caused by over-torquing the mating cylindrical nut. Split pin failures, in addition to potentially causing a stuck rod, could break free and cause steam generator damage as well.

Westinghouse has redesigned the split pins, including revising the heat treatment requirements and reducing the torque requirement on the nut. No reported problems have been reported from the domestic plants using the new split pins. However, some French plants have reported failures in the new split pins. No definitive explanation as to the continued SCC problems has been given.

- **Spider Assembly**

Cyclic fatigue, maintenance, improper water chemistry, or reactor trips are leading contributors to the degradation of the spider assembly.

The mechanical forces developed during refueling maintenance, which require coupling or uncoupling of the CRDM to the spider assembly, contribute to the degradation of spider assembly drive rod couplings. Operation experience data at one facility cites the degradation of spider assembly couplings after 15 years, which resulted in a dropped rod.

Cyclic fatigue, radiation, water chemistry, and mechanical impact are all potential contributors to the degradation of spider assembly vane welds. Cyclic fatigue is primarily induced by load changes that occur during stepping insertion and withdrawal sequences. If a rod drops or a plant trips, the spider assembly absorbs any remaining impact energy after the rods enter the dashpot region of the fuel assembly guide thimbles. In addition, the vanes are susceptible to stress corrosion cracking from their exposure to radiation, material stress, and chemistry of the reactor's internal environment. As noted in Section 4, a spider assembly vane weld failure resulted in a stuck control rod at one plant.

3.3.2 Control Rod Drive Mechanisms

The Control Rod Drive Mechanisms (CRDM) are mounted on top of the reactor and control the motion of RCCAs within the core. Therefore, the various subcomponents of this assembly play an important role in controlling core reactivity and mitigating plant transients. Parts exposed to the reactor coolant are constructed from corrosion resistant materials, such as stainless steel and alloy X-750 (Inconel). All parts of the CRDM, which are exposed to the reactor coolant, are fabricated from corrosion resistant stainless steel, Inconel or cobalt based alloys. Only austenitic and martensitic stainless steels are used[11]. The primary degradation mechanisms of concern for the CRDM are those that can rupture the pressure housing or prevent free movement of control rods within the core.

- Pressure Housing

  The pressure housing is part of the primary pressure boundary between the reactor coolant system and the containment. Therefore, the principal stresses of concern for this assembly are those that can contribute to a rupture of this boundary. The pressure housings are made from Type 304 stainless steel, either cast or forged. CRDM pressure housings made from cast stainless steel are a particular concern because of this material's susceptibility to thermal embrittlement (thermal aging), which is a function of time, temperature and material, and affects stainless steel castings having a relatively high ferrite content. Thermal aging reduces fracture toughness of the cast stainless steel which may lead to the development of small cracks in the pressure housings. Although the worst case failure scenario for the CRDM pressure housing could result in the simultaneous occurrence of a small break loss of coolant and a rod ejection accident, more likely CRDM leakage events involve the development of small leaks. Such leaks would be difficult to detect and would expose neighboring components to additional chemical stress from their exposure to the corrosive boric acid in the primary coolant.

- **Drive Rod Assembly**

  The drive rod assembly is constructed from a Type 410 stainless steel. It contains precise circumferential grooves, which permit the RCCA to be positioned at any core location. A coupling that allows for attachment to a mating RCCA spider is machined from Type 403 stainless steel. All other parts are fabricated from Type 304 stainless steel, except the springs, which are alloy X-750 (Inconel), and the locking button which is made from Haynes 25[11].

  This assembly is subjected to the same stresses as the latch assembly, namely cyclic fatigue, primary coolant chemistry, mechanical binding, wear, and testing.

- **Latch Assembly**

  The latch assembly contains fixed and movable magnetic pole pieces which actuate two sets (stationary and movable) of gripper latches. Each set contains three latches positioned 120° apart, which engage grooves in the CRDM Drive Rod to move or hold the position of an RCCA. Magnetic pole pieces are fabricated from Type 410 stainless steel, while all non-magnetic parts, except springs and pins, are made from Type 304 stainless steel. Haynes 25, in the solution treated and cold worked condition, is used to fabricate the link pins. Springs are fabricated from Inconel. For improved wear, the tips of the latch arm are clad with Stellite-6, while hard chrome plate and Stellite-6 are used selectively for bearing and wear surfaces[11].

  Operating stresses for this assembly include cyclic fatigue, primary coolant chemistry, and mechanical binding. Such stresses are a direct result of loading forces developed during the numerous insertion and withdrawal stepping sequences, which occur during the operating life of a CRDM.

  The mechanical degradation of other reactor internal components and poor housekeeping during refueling outages contribute to the creation of small particle debris within the primary coolant. Since the CRDM must always be filled with coolant, small particles present in the coolant may become lodged in the latch assembly, causing mechanical binding or jamming of the mechanism and resulting in a stuck control rod. In addition, the friction developed between the debris in the coolant and the small components of the latch assembly might increase the wear of the latch assembly.

- **Operating Coil Stack Assembly**

  The operating coil stack assembly consists of three electro-magnetic coils contained within a separate housing. This assembly is mounted externally to the CRDM Latch Housing. Six lead wires (two wires from each coil) are routed through a separate conduit and terminate at a single, six-pin electrical connector. Operational and environmental stresses include thermal stress, moisture, corrosion, mechanical wear, and radiation.

The coil housings are fabricated from ductile iron which is zinc plated for corrosion resistance. The coils are wound on bobbins of molded Dow Corning 302 material, with double glass insulated copper wire. The coils are then vacuum impregnated with silicon varnish. A wrapping of mica sheet is secured to the outer diameter of the coil resulting in a well insulated coil capable of sustained operation at 200°C[11].

High ambient temperatures (thermal stress) primarily affects the insulation quality of the operating coils and their connected cabling. Over several operating cycles, thermal stress may lead to an electrical short circuit. The adverse effects of thermal stress on insulation quality are further enhanced when temperature is combined with other operational and environmental stresses of vibration and humidity. In addition, long term energization of a coil, such as that experienced by the stationary gripper coil, may induce additional thermal stress in localized areas due to ohmic heating of the windings. Changes in coil temperature affects the coil resistance.

The review of operating experience data found electrical connectors at the operating coil stack to be the leading contributor of failures within this assembly. The significant stresses identified for this component include maintenance, and corrosion from boric acid. Such stresses may contribute to the development of open electrical circuits due to mechanical fatigue or corrosion of connector pin mating surfaces. The type of connection used was modified by Westinghouse for newer plants.

- CRDM Mechanical Clearances[11]

The CRDM must function over a wide temperature range. Therefore, mechanical clearances must be maintained throughout its life. Such clearances are present in three main areas.

- Latch Arm

  During movement of the RCCA, load is transferred between the movable and stationary gripper latches. When the RCCA is in position, there is clearance between the movable gripper and the drive rod. With the lift coil off, the clearance decreases from .055 in. at room temperature, to .051 in. at 650°F. With the lift coil on, the clearance decreases from .055 in. at room temperature, to .034 in. at 650°F.

  During rod movement, clearances between the stationary gripper and drive coil varies from .008 in. at room temperature, to .029 in. at 650°F with the lift coil off. When the lift coil is on, the clearances vary from .008 in. at room temperature, to .046 in. at 650°F.

- Coil Stack Assembly

  The coil stack assembly can be removed from the latch housing at all temperatures. At room temperature, the ID of the coil stack is designed to be 7.303 ± .005 in. Thermal expansion due to operation results in a coil stack minimum ID of 7.310 in., with a maximum latch housing OD of 7.302 in. Therefore, under the extreme operating temperature range, a coil housing which is at room temperature must be allowed time to heat during replacement so that it will fit.

- Coil Fit in Core Housing

  To facilitate heat transfer and coil cooling in a hot CRDM, the CRDM and coil housing were designed with minimum clearances.

3.3.3 Power and Logic Cabinets

The power cabinets contain solid-state electronic switching devices, called thyristors, and associated power circuits that convert the three-phase, 260V a-c voltage fed from the reactor trip breakers to a pulsed d-c voltage required by the operating coils of the CRDMs. The low level/low power signal processing and control circuits are contained in separate, steel-enclosed logic cabinets. Control circuits of the power and logic cabinets are mounted on plug-in printed circuit cards.

Heat, humidity, supply voltage transients, vibration, and corrosion are significant stresses. During the review of operational data, an elevated level of ambient temperature was identified as the leading contributor to the failure of components within the power cabinet. High ambient temperature directly affects solid state electronic devices, such as integrated circuits and transistors. The power cabinets are typically located in the Control Building switchgear rooms and, therefore, are not in unusually harsh environments. Heat dissipated from thyristors, transformers and other components used for electrical power conversion in this cabinet, however, will increase any potentially adverse, ambient temperature conditions, and increase the thermal stress experienced by its temperature sensitive components. Forced air circulation derived from outside may not always be adequate for properly addressing this concern. Depending on the geographic location of the plant, and the season, outside air temperature and relative humidity may already be elevated. Thus, several plants have installed additional air conditioning to ensure a better operating environment for the power and logic cabinets.

Mechanical vibrations from external forces such as improperly closing cabinet doors, or vibrations that are induced internally by certain components such as transformers affect the physical integrity of soldered and plug-in electrical wiring connections.

In addition, testing and maintenance involving the mechanical disturbance of any component or wiring device, such as pulling fuses during tests for rod drop timing, or lead lifting and jumpering during maintenance cause additional mechanical loads on this subsystem that should be minimized whenever possible.

3.3.4 Rod Position Indication Systems

The Individual Rod Position Indication System (IRPI) provides a direct, continuous indication of control rod motion and, as discussed in Section 2, may be either an analog or digital type of design. In both designs, the detector coils are concentrically mounted over the rod travel housing of each CRDM and, therefore, experience many of the same environmental stresses described for the operating coil stack assembly. However, the consequences of stresses that may lead to detector coil failure are more significant in the analog type of IRPI system. Since the detector used in the analog system is a linear variable differential transformer (LVDT), a single open coil winding occurring in

either the primary or secondary side will initiate a false rod drop signal and cause a loss of all position information for the affected rod. As described in Section 2, the digital system incorporates a number of individual, alternately connected, detector coils. Therefore, a single coil winding that fails open will result in a loss of accuracy of the displayed position information, but should not cause a loss of all position information or generate a false rod drop alarm.

From the review of operational data discussed in Section 4, the analog IRPI system also appears to be less resistant to changes in the operating temperature of the detector coil. Such fluctuations in temperature may be induced by changes in the CRDM housing temperature during heatup of the primary system. Temperature variations cause the output signal of the detector to fluctuate, resulting in instrument drift related problems during plant startup.

The Bank Demand Position Indication System (BDPI) derives its position information from step counting circuits located in the logic cabinet. Therefore, those stresses identified previously for the Power and Logic Cabinets may also impact the availability of this system. Since the BDPI basically consists of solenoid driven electro-mechanical counters, this system is also susceptible to mechanical wear and cyclic fatigue.

Tables 3.1 and 3.2 summarize the analysis of the stresses, which can contribute to the aging related degradation of the control rod drive system. Table 3.1 identifies each major CRD system component, the materials used, the primary degradation mechanisms, and the most likely failure mode. Table 3-2 qualitatively evaluates the significance of each of the operational and environmental stresses that have been discussed. It also focuses on the areas where predictive maintenance can be applied. This evaluation is based on an engineering analysis of the materials of composition, design environmental and operational conditions, and the operating experience of the CRD. Generally, a "high" (H) ranking indicates that operating experience supports the assessment, while a "low" ranking (L) shows that neither experience nor an analysis of engineering design provide evidence to deem this an important aging concern. An (M) represents a moderate aging effect due to the particular operational or environmental stress.

Table 3.1 Significant Westinghouse CRD system degradation mechanisms

SUBSYSTEM/ COMPONENT	MATERIAL	DEGRADATION MECHANISM	POTENTIAL FAILURE MODE
1. RCCA AND RELATED REACTOR INTERNAL COMPONENTS:			
a) Spider Assembly	304SS	• Fatigue • Mechanical Wear • Stress Corrosion Cracking (SCC)	• Dropped Rod • Stuck Rod
b) Absorber Rods	304SS	• SCC • Mechanical Wear	• Rupture of control rod cladding
c) Control Rod Guide Tube	Alloy X750 (Inconel)	• Mechanical Wear	• Stuck control rod
d) Split Pin	Alloy X750 (Inconel)	• SCC	• Loose parts in reactor coolant system • Stuck control rod
e) Guide Thimble	Alloy X750 (Inconel)	• Mechanical Wear	• Fuel assembly mechanical degradation • Stuck control rod
2. CRDM			
a) Pressure Housing	304SS	• Thermal Embrittlement • Corrosion • Fatigue Crack Growth	• RCS Leak • Rupture of primary pressure boundary
b) Latch Assembly	Stellite 6, Haynes 25, and 304SS	• Mechanical Wear • Fatigue	• Dropped Rod • Stuck Rod
c) Drive Rod	410SS	• Mechanical Wear • Fatigue	• Dropped Rod • Stuck Rod

Table 3.1 (Cont'd)

SUBSYSTEM/ COMPONENT	DEGRADATION MATERIAL	MECHANISM	POTENTIAL FAILURE MODE
d) Coil Stack Assembly	Electrical insulation and connectors	• Corrosion • Corrosion (connectors, housing) • Mechanical Wear (connectors) • Insulation Breakdown • Fatigue (connectors) • Thermal Embrittlement (housing)	• Dropped Rods • Stuck Rods
3. ROD CONTROL SYSTEM & LOGIC CABINETS	Semiconductor devices, electronic components, connectors	• Corrosion • Fatigue • Mechanical Wear	• Single/Multiple rod drop • Inability to move rods on demand • Erroneous rod movement • Incorrect or spurious rod control system failure alarms • Incorrect Rod Position Indication
4. ROD POSITION INDICATION SYSTEMS	Electrical wiring, insulation, connectors semiconductor devices & electro-mechanical components	• Corrosion • Mechanical Wear • Fatigue • Insulation Breakdown	• Incorrect/Inaccurate Rod Position Information • False dropped rod indication (Analog RPI)

Table 3-2 CRD System Stress Summary

Component	Operating Stresses										Environmental Stresses			Potential Aging Mechanism							
	Mechanical Binding/Rub	Cyclic Fatigue	Vibration	Water Chemistry Debris	Reactor Trip/ Scram	Boric Acid Corrosion	Voltage Transient	Maintenance	Testing	Human Error	Temperture	Humidity	Radiation	Mechanical wear	Corrosion	Stress Corrosion Cracking	Erosion	Fatigue	Fatigue Crack Growth	Thermal Embrittlement	Insulation Degradation
RCCA Spider Assembly	M	H	M	L	M	L	N/A	L	M	L	M	N/A	M	H	L	M	L	M	L	L	N/A
Absorber Rods	H	H	H	M	M	L	N/A	L	M	L	M	N/A	M	H	L	H	M	M	L	L	N/A
Guide Thimble	H	M	M	L	L	L	N/A	L	L	L	L	N/A	L	M	L	L	L	L	L	L	N/A
CRDM Guide Tube	H	M	H	L	M	L	N/A	M	L	L	L	N/A	L	H	L	L	L	L	L	L	N/A
Split Pin	L	M	L	H	M	L	N/A	M	M	L	L	N/A	L	L	L	H	L	M	L	L	N/A
Drive Rod	M	H	L	M	L	L	N/A	L	M	L	M	N/A	M	H	L	L	L	H	L	L	N/A
Latch Assembly	M	H	L	M	L	L	N/A	M	M	L	M	N/A	M	H	L	L	L	H	L	L	N/A
Coil Stack Assemb.	L	H	L	L	M	H	H	L	M	L	H	M	M	L	H	M	L	L	H	H	H
Pressure Housing	L	M	L	M	M	H	N/A	L	L	L	H	M	M	L	H	H	L	L	H	H	N/A
Electrical Connector/Cables	L	L	L	L	L	H	M	M	L	M	M	H	M	H	H	L	L	H	L	L	H
POWER/LOGIC Thyristors	L	L	M	N/A	L	L	H	M	L	M	H	H	L	L	M	L	L	M	L	L	H
Discrete Components	L	L	M	N/A	L	L	H	M	L	M	H	H	L	L	M	L	L	M	L	L	H
P.C. Logic Cards	L	L	M	N/A	L	L	H	M	L	M	H	H	L	M	M	L	L	M	L	L	H
d.c. Power Supplies	L	L	M	N/A	L	L	H	M	L	M	H	H	L	L	M	L	L	L	L	L	H
Relays	L	H	M	N/A	L	L	H	M	L	L	M	M	L	H	H	L	L	H	L	L	M
Fuse/Fuse Holders	L	L	M	N/A	L	L	H	M	L	M	M	M	L	H	H	L	L	M	L	L	L
Internal Wiring	L	L	M	N/A	L	L	L	M	L	M	M	M	L	L	M	L	L	L	L	L	H

Table 3.2 CRD system stress summary (Cont'd)

Component	Operating Stresses										Environmental Stresses			Potential Aging Mechanism							
	Mechanical Binding/Rub	Cyclic Fatigue	Vibration	Water Chemistry Debris	Reactor Trip/ Scram	Boric Acid Corrosion	Voltage Transient	Maintenance	Testing	Human Error	Temperture	Humidity	Radiation	Mechanical wear	Corrosion	Stress Corrosion Cracking	Erosion	Fatigue	Fatigue Crack Growth	Thermal Embrittlement	Insulation Degradation
ROD POSITION IND. Detector	L	H	M	N/A	L	H	H	L	M	L	H	M	M	L	M	L	L	M	L	L	H
Electronics	L	L	M	N/A	L	L	H	M	L	M	H	H	M	L	M	L	L	M	L	L	H
Relays	L	H	M	N/A	L	L	H	M	M	L	M	M	L	H	M	L	L	M	L	L	H
Indicators	M	M	M	N/A	L	L	H	M	L	M	M	L	L	M	M	L	L	M	L	L	H
Switches	M	M	M	N/A	L	L	M	M	L	L	L	L	L	H	M	L	L	H	L	L	L

NOTES: 'H' - High significance of stress on aging of the component
'M' - Moderate aging effect due to that stress
'L' - Not an important aging concern
'N/A'- Component not exposed to that stress

4. OPERATING EXPERIENCE FAILURE DATA ANALYSIS

This section presents the results of an analysis of operational experience associated with the performance of the Westinghouse Control Rod Drive (CRD) system. The information is based on a detailed review of CRD system failure data obtained from three national sources of nuclear plant operating experience. These sources are the Nuclear Plant Reliability Data System (NPRDS), Nuclear Power Experience (NPE), and Licensee Event Reports (LERs). The scope of the data search conducted for this study includes CRD system related failures, which have occurred at domestically operated Pressurized Water Reactors (PWRs) employing the Westinghouse CRD system. Failure data obtained from NPRDS and NPE includes CRD system failures, which were reported during a nine year period between January 1, 1980 and December 1988. Information obtained from the Sequence Coding and Search System, which contains the LER database, includes failure reports submitted during a five year period between January 1, 1984 and December 1988.

NPRDS is a computerized information retrieval system currently maintained by the Institute of Nuclear Power Operations (INPO). This source of system performance is based on reports of failures of key components, which are submitted to INPO by the nuclear industry. NPRDS provides access to historical engineering failure data that reflects a broad range of operating experience. In addition, this database typically provides more comprehensive information on the failure of components than is available in other national databases.

The search of the NPRDS database identified 172 failure event reports of the Westinghouse CRD system. In general, these reports contain sufficient details to readily identify the basic characteristics of system and component malfunctions such as the failure mode, method of detection, and the effect the failure had on both the system's operation and the plant's performance. Through the application of engineering judgement and detailed analysis of the failure information, other significant characteristics, such as the cause and mechanisms of failure, were determined.

Nuclear Power Experience (NPE) is a commercial technical publication service that summarizes significant events which have occurred at operating reactors and provides an indexed reference of all pertinent occurrences. Although much of this information is derived from Licensee Event Reports, the NPE data also includes utility operating reports and a wide variety of applicable literature. A computer assisted search of this database identified 147 summaries of CRD system related failures that were compiled during the nine years reviewed.

A search of the Sequence Coding and Search System (SCSS) revealed 125 LERs related to the Westinghouse CRD system from January 1, 1984 to December 1988. Each LER was reviewed to identify the failed component, the cause of failure and the effect the failure had on the operation of the CRD system. The data obtained from this five-year period, when coupled with other data searches (NPRDS and NPE), provides a good basis for understanding the safety significance of CRD failures. Some duplication exists among the three databases; "double counting" was avoided by examining each failure. Approximately 300 unique events were identified.

Although a great deal of useful information is available from the databases, there are limitations and weaknesses to it which must be recognized. In general, the databases do not contain a complete record of all failures. The result is that failure frequencies determined directly from the database information will be lower than actual. However, using the data for analyzing failure characteristics, such

as causes, modes and mechanisms, should not be severely affected by this deficiency. Using the data for evaluating aging effects is, therefore, a valid application.

To facilitate the classification of reported failures during this study, each failure record obtained from the three national databases was individually reviewed and encoded into a computerized database developed by BNL using d-Base III software. Failure reports were categorized in accordance with the subassembly in which the failure occurred (Figure 4.1). As noted in the figure, the subassemblies selected for a detailed review by this study include:

1. Rod Cluster Control Assembly (RCCA)
2. Control Rod Drive Mechanism (CRDM)
3. Power and Logic Cabinets
4. Cabling and Connectors
5. Rod Position Indication (RPI)

In addition, events whose root cause of failure was attributed to errors by plant's staff, such as the improper installation, operation or maintenance of equipment, have been classified separately as "human error".

4.1 Dominant Failure Trends

4.1.1 Aging Fraction

A primary objective of this study is to assess the impact of aging related component degradation on system performance and reliability and provide recommendations to mitigate its effects. To accomplish this task, a comparison was made between the information obtained from NPRDS and the NPAR definition of an "age related" failure presented in NUREG-1144. Before a failure could be classified as "aging related", it had to satisfy the following criteria:

1. The failure must be the result of cumulative changes with the passage of time which, if not mitigated, may cause loss of function and impairment of safety. Factors causing aging can include:

    - Natural, internal chemical or physical processes which occur during operation.

    - External stresses (e.g., radiation, heat, humidity) caused by the storage or operating environment.

2. The component must have been in service for at least six months (to eliminate infant mortality failures).

The data were then individually reviewed and sorted to determine the events that were age related. The results are presented in Figure 4.2, which shows that the Westinghouse CRD system is susceptible to age related degradation. A minimum of 37% of all failures fall into this category. Figure 4.2 also shows that a large fraction (29%) of reported failures could not be directly attributed to the age related degradation of components as defined in NUREG-1144, and, therefore, are categorized as "potentially age related".

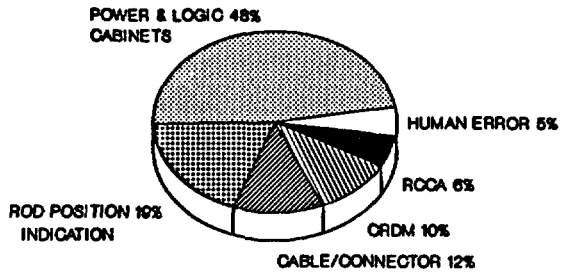

NPRDS DATA

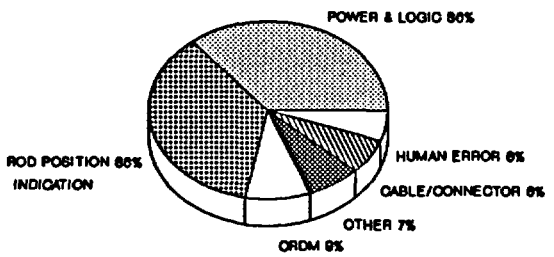

LER DATA

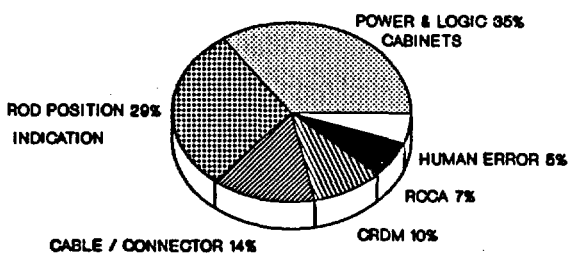

NPE DATA

Figure 4.1 CRD failure distribution

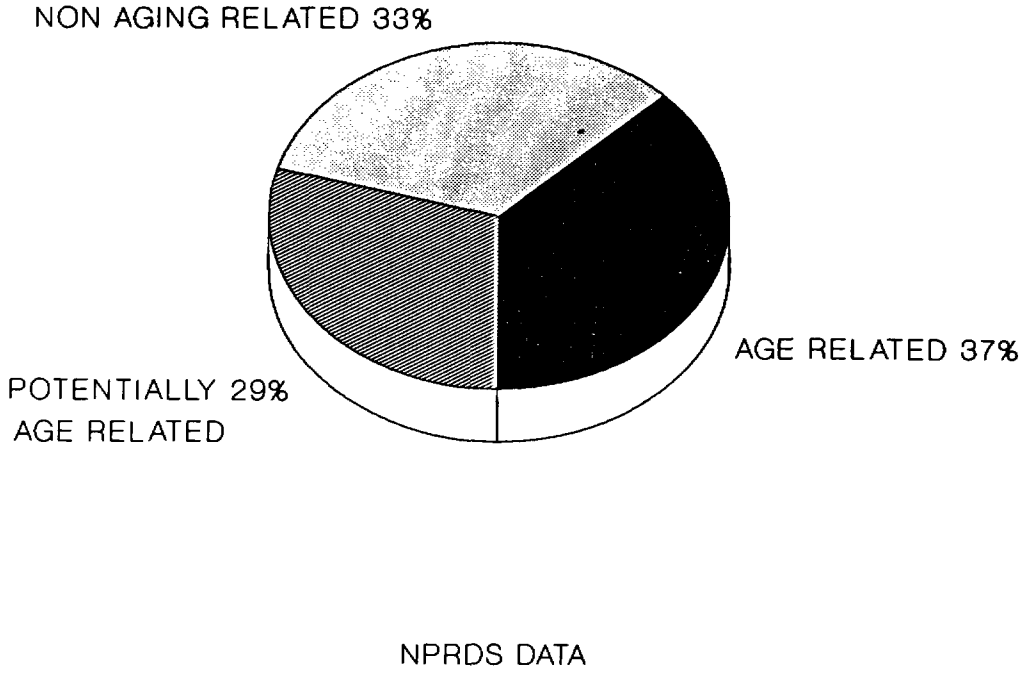

Figure 4.2 CRD system aging fraction

The inability to specifically categorize the aging contribution of certain component failures is primarily due to reporting limitations in the data. For example, the power and logic cabinet subassembly has been identified as a leading contributor to failure of the Westinghouse CRD system. In several cases, however, power and logic cabinet failure records only indicated the type of component (e.g., logic card) that had failed and the corrective action taken (e.g., replaced card). When records of this type are evaluated, other non-age related causes of failure, such as spurious power transients, must be considered, in addition to the age of the component at the time of failure. Inadequate root cause analysis by the utilities may also contribute to the weak data.

4.1.2 Effects of Failure

An evaluation of the Westinghouse CRD system operating experience data was performed to determine the effects on system performance. Figure 4.3 shows the results of this evaluation; over half (63%) of all events reported in the NPRDS resulted in degraded system operation which, if uncorrected, could adversely affect safety.

Nineteen percent of events reported to NPRDS resulted in a loss of component redundancy (Figure 4.3). While the failure of a redundant component may not appear to adversely impact the system's operation, from a PRA standpoint it would decrease the availability in the overall system, and therefore, represents a potentially significant failure effect.

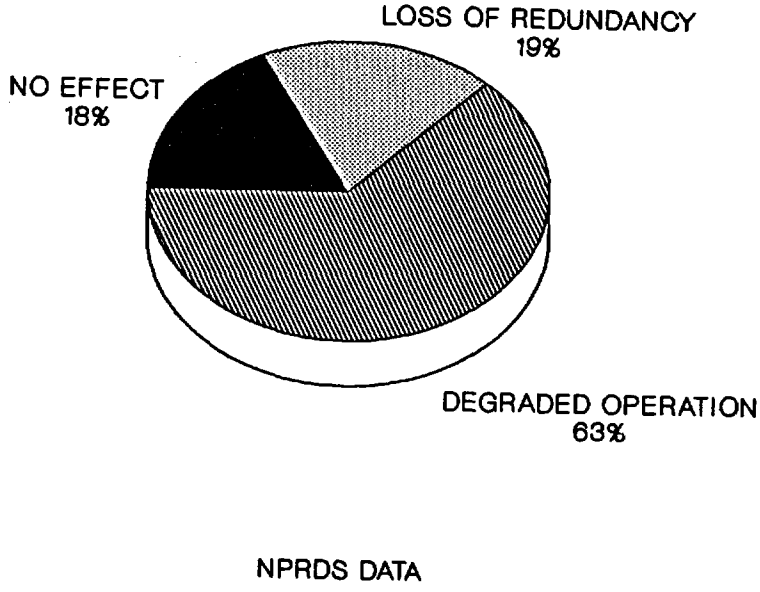

Figure 4.3 Effects of failure on CRD

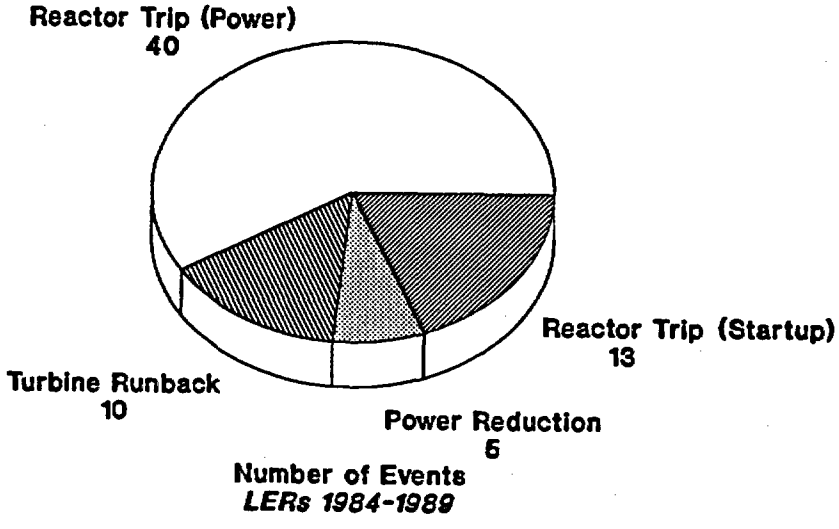

Figure 4.4 Effect of failure on plant operation

Unplanned, automatic trips challenge the operation of the plant's safety systems. Consequently, their occurrence represents a potentially significant increase in plant risk. Figure 4.4 shows the effects of failure on plant performance that were identified in the LER data. Of the 125 LERs obtained, 40 described system failures that resulted in a reactor trip from power operation. Additionally, the NPRDS data identified several important plant/system interactions. The results of this review show that a significant fraction (32%) of CRD system failures reported to the NPRDS directly affected plant performance by either an unplanned shutdown or reducing power.

4.1.3 Causes of Failure

The cause of failure is the actual malfunction or event that resulted in component degradation or failure. The somewhat limited technical detail in the data, however, precluded in many cases, an accurate determination of a specific "root cause" of failure. Therefore, for this study, each failure record was reviewed to determine the general condition or event which caused the component to fail. The overall results of this review indicate that the majority of the failures of the Westinghouse CRD system are caused by component degradation that has occurred during normal operation.

The portion of the CRD system bounded by this study consists of a combination of mechanical and electronic subassemblies which perform diverse functions and operate in widely differing environments, making each subassembly susceptible to its own set of failure mechanisms. Therefore, specific causes of component failure within each subassembly are discussed separately in Section 4.2.

Human error was the cause for approximately 5% of the failures reported in each database reviewed and does not appear to be a leading contributor to failure of the CRD system. The infrequency of reported human errors, however, should not mask their significance. Table 4.1 presents a summary of human related failures identified during the review of LER data which shows a high level of plant sensitivity to such failures.

4.1.4 Modes of Failure

A failure mode is a description of the basic manner in which a malfunction in the CRD system was detected. The predominant failure modes of the CRD system that were identified during the review of the NPRDS data are shown in Figure 4.5. The most frequently observed failure modes include the inability to move rods on demand (35%), and unintended rod insertion (27%). Abnormal system operating characteristics of this type are typical consequences of component malfunctions within the power and logic cabinets and are consistent with the identification of this subassembly as the leading contributor to failure of the CRD system.

System failure modes categorized as "abnormal characteristic" include instances of unexpected component degradation that was detected during in-service inspections, surveillance, and routine observations.

Failure modes identified as "alarm" include component failures that do not represent an immediate adverse effect on plant operation and, by design, actuate a "non-urgent" alarm upon failure. An example of such an event would include the failure of a single, redundant, dc power supply within the power cabinet. In addition, this category of failure mode includes events that were detected by a spurious or incorrect alarm.

Table 4.1 Summary of human related LERs

	Plant	LER #	Age at Time of Failure (years)	Failure Description
1.	Cook 2	86-028	8	Calibration procedure error resulted in an inoperable rod insertion limit monitor.
2.	Indian Point 2	86-031	13	Error in biweekly rod exercise test caused rod drops and reactor trip.
3.	McGuire 2	84-026	1	Troubleshooting error made due to a procedure deficiency resulted in a rod drop and subsequent reactor trip from 100% power.
4.	Point Beach 1	87-001	17	Test lead incorrectly placed in preparation for testing - 22 rods dropped.
5.	Summer 1	87-024	5	Technician inadvertently de-energized 2 power supplies resulting in 12 dropped rods and a reactor trip from 100% power.
6.	Surry 1	86-003	14	Jumper came off and shorted the logic circuitry resulting in 4 dropped rods.
7.	Wolf Creek 1	87-041	1	Fusible link disconnect switch on control rod movable gripper coil was bumped" - resulted in a rod drop and reactor trip from 86% power.

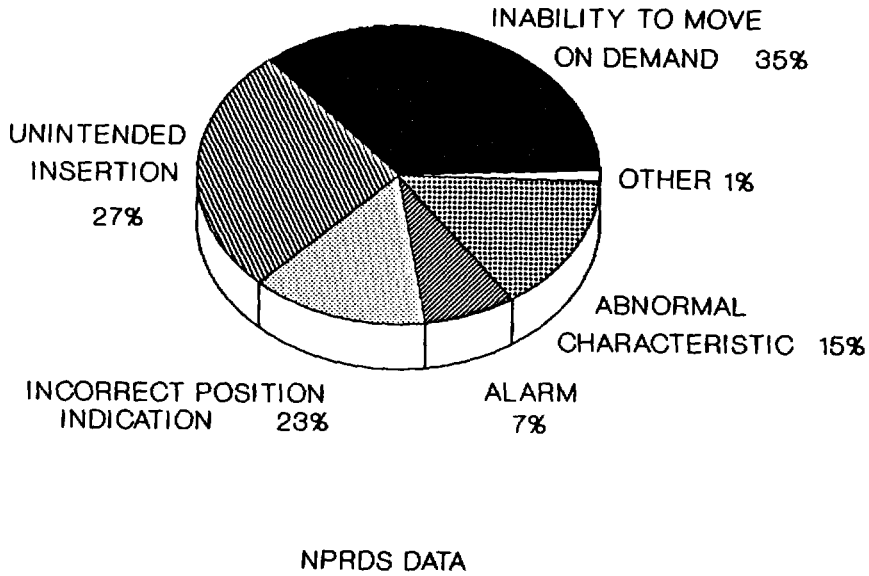

Figure 4.5 CRD system failure modes

4.2 Component Failure Analysis

This section presents the results of a detailed review of available data for specific failure characteristics of each subassembly of the CRD system. As discussed previously, the Westinghouse CRD system consists of the following five major assemblies:

1. Rod Cluster Control Assembly
2. Control Rod Drive Mechanism
3. Power and Logic Cabinets
4. Electrical Cables and Connectors
5. Rod Position Indication

4.2.1 Rod Cluster Control Assembly

The Rod Cluster Control Assemblies (RCCAs) provide a rapid means for reactivity control during normal operating conditions and accidents. Several, potentially generic, age significant failure mechanisms have been identified during the review of operational performance data related to the individual absorber rods which comprise the RCCA in the Westinghouse CRD system. Results from testing revealed a significant amount of wear on the absorber rod cladding surfaces of the RCCAs. This problem was described in four NPE articles and two NPRDS records, and was also addressed in IE Information Notice 87-19 "Perforation and Cracking of RCCAs".

From the review of available failure data and related documents containing information on the results of an analysis performed by Westinghouse and the licensees, cladding surfaces of control rods are susceptible to three independent types of age related degradation. The specific types of wear include sliding wear, fretting wear, and stress corrosion cracking of the stainless steel cladding, which encases the absorber material.

In addition to sliding and fretting wear described in Section 3, cracking of Type 304 stainless steel control rod casing material was identified by eddy current tests at one facility after approximately 12 years of operation. In this case, the cracking was located in an area just above the rodlet end plug and was fairly widespread. Thirty-two RCCAs were affected; the worst RCCA had cracks in 13 rods. Further analysis of the effected rods revealed that cracking of the rod was initiated by irradiation induced swelling of its absorber which is a silver, indium, cadmium material. The subsequent absorber/clad contact induced a high level of stress in the casing which resulted in Intergranular Stress Corrosion Cracking (IGSCC) of the Type 304 SS cladding material.

Primary water stress corrosion cracking of two fuel assembly holddown spring clamp screws was identified as the root cause of a stuck control rod discussed in one NPE article. The failed screws caused a spring clamp to work loose and become lodged in the RCCA. The control rod was not movable, which required an unplanned shutdown of the reactor. The NPE article also stated that this failure had occurred on at least two other occasions at Westinghouse PWRs.

Control Rod Guide Tubes

According to informaton in four NPE articles and two LERs, stress corrosion cracking has caused control rod guide tube support pins to degrade. Support pin cracking at Westinghouse PWRs is addressed in IE Information Notice 82-29.

The support pins of the control rod guide tubes align the bottom of the control rod guide tube to the top of the upper core plate relative to the fuel assembly. They provide lateral alignment and support for the guide tube (Figure 4.6). The pins are constructed of Alloy X-750 which, depending on the manufacturer and the date of fabrication, may have been subjected to solution heat treatment temperatures and times ranging from 1625°F to 2100°F and one-half hour to twenty-four hours, respectively. Based on a Westinghouse analysis cited in the NPE failure summaries, support pins that were solution annealed at less than 1800°F may be susceptible to failure from stress corrosion cracking. Westinghouse recommended that the pins be solution heat treated at 2000°F for one hour and age hardened at 1300°F for twenty hours to minimize stress corrosion [12]. This recommendation has since been modified, but is considered to be proprietary[33].

Two facilities that reported failures of support pins detected the broken pins following alarms in the loose parts monitor of the steam generator. One failure damaged the steam generator tube ends. Ultrasonic and visual examinations at another facility revealed 67 of 74 support pins in a degraded condition. Three of the pins were missing parts, which were retrieved from a steam generator.

A potential consequence of a failure of the support pins is the misalignment of the guide tubes, which could prevent control rod insertion. Westinghouse does not consider this to be credible. Upper Head Injection plants (Sequoyah, McGuire, Catawba, and Watts Bar) have a special retainer welded to the bottom of the guide tube flange that prevents the support pin shoulder from dropping out of the counterbored hole in the guide tube flange.

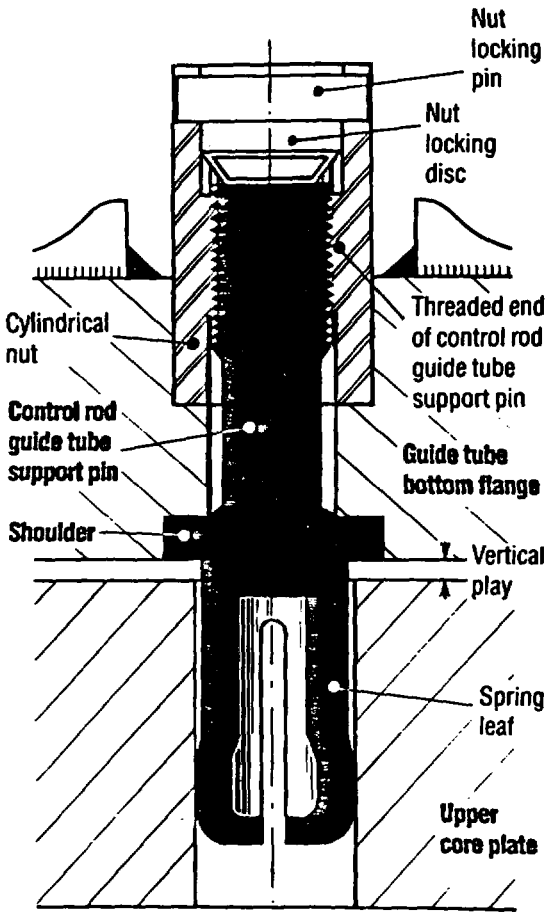

Figure 4.6 Control rod guide tube support pins

Control Rod to Mechanism Coupling

The review of NPRDS data identified two age related failures of the RCCA spider assembly. This assembly mechanically couples the individual absorber rods to the Control Rod Drive Mechanism (CRDM). A failure in the vane weld of the spider assembly reported by one facility was initially detected as a stuck control rod that became free after several insertion and withdrawal stepping sequences. Subsequent core surveillance, however, showed differences in flux level and temperature at that core location. During the next refueling outage, it was confirmed that a weld failure of the spider assembly had occurred. This failure caused an absorber rod to discharge from the mechanism and drop into the core. It is interesting to note that this type of rod drop is not detected by an alarm, which is derived from detectors located on the control rod drive mechanism.

Mishandling during refueling operations was the probable cause of several, widely spread rod drive shaft couplings at one facility. The spread couplings were detected by an inspection that was prompted by latching problems encountered during a previous reactor reassembly. The spread couplings had caused misalignment of the coupling and hub which prevented proper latching of the coupling to the rod hub.

4.2.2 Control Rod Drive Mechanism

The Control Rod Drive Mechanism (CRDM) operates as an electromechanical jack to control the position of an RCCA within the core. As discussed in Section 2, the CRDM is comprised of five subassemblies and includes an operating coil stack, rod position detector coils, internal latch mechanisms, a drive rod assembly, and an external pressure housing.

Coils

The operating coil stack assembly consists of three independent coils, the stationary, movable, and lift coils, which are concentrically mounted outside the pressure housing. Based on sequential control signals received from the power cabinet, the operating coil stack provides the magnetic forces necessary to actuate internal CRDM latching devices which engage a grooved control rod drive shaft to control the physical position of an associated RCCA.

Operational data related to the historical performance of the operating coil stack assembly were found to be dominated by failures of the connectors. Failures of electrical cables and connectors are classified as a separate subsystem for this report (Section 4.2.4).

NPRDS and LER data describe failures of the operating coils. All but one of the events were the result of a failure of the stationary gripper coil, which is normally energized to hold its associated RCCA in a desired position. De-energizing the stationary coil at any time during plant operation, other than those required to perform a rod insertion or withdrawal stepping sequence, will result in dropped rods which may cause an automatic trip of the reactor. All reported failures of stationary gripper coils occurred in coils with more than 10 years of operating life.

The predominance of failures of stationary coils, when compared to other coils of this subassembly, may be due to aging related degradation of the stationary coil's electrical insulation. This increased level of thermal stress could be derived from ohmic heating of the coils during long term energization. The sensitivity of stationary coil insulation to the effects of thermal stress was also the subject of an NPRDS failure record. A malfunctioning CRDM shroud cooling fan caused two stationary coil failures. The loss of the cooling fan caused shroud air outlet temperatures to exceed 220°F during reactor coolant system heatup. A special inspection revealed inoperable stationary gripper coils on two CRDMs.

One NPE failure summary, which described the simultaneous failure of 12 stationary coils, 1 lift coil, and 1 movable gripper coil serves as an example of a coil's susceptibility to failure following exposure to the steam or boric acid environment of the primary system. The coil failures were caused by an RPV level instrument piping leak, which occurred approximately one year before the coil failures.

CRDM Latch Assembly

Problems related to mechanical binding of the CRDM latch assembly were discussed in three failure events contained in the data. In all three cases, small particle debris in the primary coolant caused latch assembly binding that resulted in a stuck control rod. Two of the related LERs clearly defined the debris as corrosion products. One LER indicates that emergency boration was required to compensate for a fully withdrawn rod.

CRDM Vent Valves

The failure of CRDM pressure vessel assembly vent valves was the subject of three NPE articles and two NPRDS reports. Two vent valve failures caused moisture contamination of CRDM operating coil stack connectors during normal plant operation. In both cases, the contaminated connectors initiated a rod drop, which ultimately resulted in an unplanned shutdown of the reactors. One additional NPE failure summary attributed human error as the cause of vent valve leakage that was observed during heatup of the primary system. In this case, an investigation revealed an improperly torqued vent valve on a CRDM that had undergone extensive maintenance during the just completed refueling outage.

CRDM Drive Rod

Failures of guide screws on the drive rods of the CRDM were discussed in three NPE articles and two LERs, and have also been documented in Information Notice 85-14. Drive rod assembly guide screw failures were first identified at Korea Nuclear 5 where it caused a stuck CRDM drive rod. Subsequent investigations by Westinghouse at this facility determined that the CRDM drive rod assembly guide screw, which aligns and guides drive rods during coupling and uncoupling from the RCCA, had rotated out of position. The guide screw fell from the drive rod, and landed on top of the latch assembly, where it lodged. Reverse torque tests on the remaining screws at this facility identified three additional, faulty guide screws. This event initiated the inspection of drive rod assemblies at two domestically operated facilities which were of similar design. Reverse torque tests at one facility identified 14 unacceptable drive rods, while similar tests at another facility found five drive rods which did not meet the acceptance criteria established by Westinghouse. In all cases, the cause of failure was attributed to the improper installation of locking pins at the time of manufacture. The locking pins were designed to intersect the mating threads of the guide screw and, if properly installed, would have prevented the screw from rotating out of position.

4.2.3 Power and Logic Cabinets

The power and logic cabinets of the Westinghouse solid-state rod control system contain electronic equipment and components necessary to operate the CRDMs. Demand signals received from the reactor control system and the main control board are processed by this equipment. The power cabinet contains electronic circuitry and equipment to convert the electrical power from the rod control system M-G sets to a pulsed d-c voltage required for operating the CRDM. All low-level timing and control circuits are located in the logic cabinets.

As depicted in Figure 4.1, malfunctions within this subassembly were found to be the dominant contributors of reported failures of the CRD system. Of the 163 hardware related NPRDS failure reports reviewed during this study, 83 (51%) were attributed to failures within this subassembly. The review of NPE and LER data produced similar findings, with 51 of the 147 NPE reports (35%) and 45 of the 125 LERs (36%) relating to this subassembly.

A further review of the data was performed to evaluate the distribution of failures within the power and logic cabinets and to identify any dominant failure trends in the subcomponents. Figure 4.7 shows the results of this review; printed circuit logic cards are the most frequently failed component, followed by fuses, d-c power supplies, and discrete components. As can be seen in this figure, the distribution of subcomponent failures closely agreed for each database reviewed.

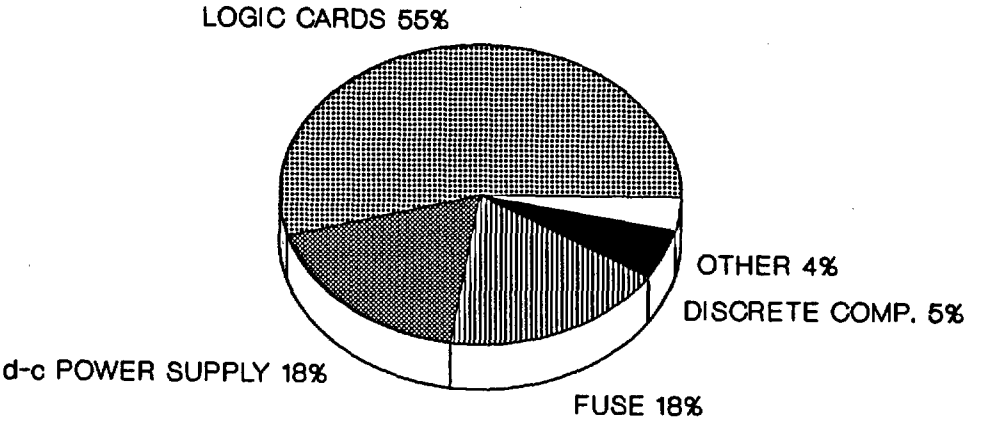

NPE DATA

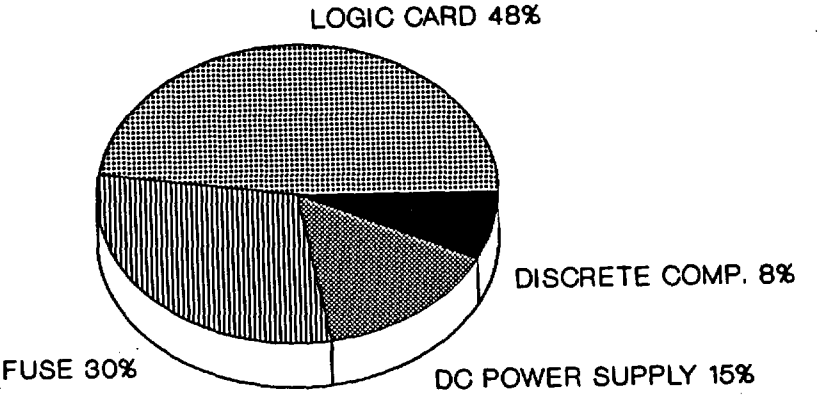

NPRDS DATA

Figure 4.7 Power and logic cabinet subcomponent failures

The dominance of printed circuit logic card failures may be related to their relatively large population within this subassembly. Additionally, printed circuit logic cards consist of an array of discrete electronic devices mounted on a single board. The entire board is usually replaced upon the failure of a single component. From the review of available failure data, however, certain logic cards may have a higher susceptibility to failure than other components located within the same cabinet.

The distribution of NPE summaries related to the failure of power and logic cabinet printed circuit logic cards is depicted in Figure 4.8. As illustrated by this figure, the most frequent circuit board failures involved "firing circuit" cards of the power cabinet and "slave cycler counter" cards located in the logic cabinet. Similar failure frequencies were also revealed during the review of LER and NPRDS data.

Integrated circuits and semiconductor devices, which comprise the logic card circuitry, are susceptible to premature failure when exposed to environmental stresses of heat and humidity in excess of their rated design operating range. Of the 27 logic card failures identified during the review of NPE data, 9 (33%) attributed the root cause of failure to an elevated level of ambient temperature within the cabinet. One NPE failure summary indicated that operational testing, performed by Westinghouse on a slave-cycler counter card, found temperature to directly influence the performance of the card. All 9 failures which identified excessive ambient temperature as the cause of logic card failure, occurred at plants less than 5 years old. Corrective actions taken by licensees to improve the ventilation may have reduced the temperature related stresses in this area.

Logic card failures significantly affect CRD system and plant performance. Of the 17 circuit board failures described in the LER data, 10 resulted in reactor trips. Similarly, the review of NPE data found 23 of the 27 reported logic card failures caused a reactor trip.

Table 4.2 summarizes the analysis of the failure data on printed circuit boards. Although the table is based on component failures contained in the NPE data, there is relative consistency with the other sources of data. This table briefly describes the function of each card. It should be noted, however, that since the failure data did not generally specify the cause of logic card malfunctions at the subcomponent level, modes of logic card failures identified in the table have been described in terms of the method in which the failure was detected (i.e., system failure mode), rather than the actual manner in which the logic card may have failed (i.e., open, shorted etc.).

Fuses

Fuses were the second leading contributor of failures within the power and logic cabinets. Of the 83 NPRDS failure reports, 24 (29%) were related to fuses which provide electrical protection for CRDM operating coils and power supply circuits.

Nine LERs, issued between January 1, 1984 and October 1, 1988, were associated with fuse failures of the power cabinet, which caused dropped rods and subsequent turbine runbacks or reactor trips. Point Beach 2 noted that a fuse failure, which occurred 15 years after initial criticality, was due to fatigue. North Anna 1, which experienced an unplanned trip due to a fuse failure in the power cabinet after only 6 years of operation, indicated that fuses for the operating coils of the CRDMs were scheduled for replacement. Additionally, Diablo Canyon also reported that they planned to replace all CRD fuses with an improved type because of degradation.

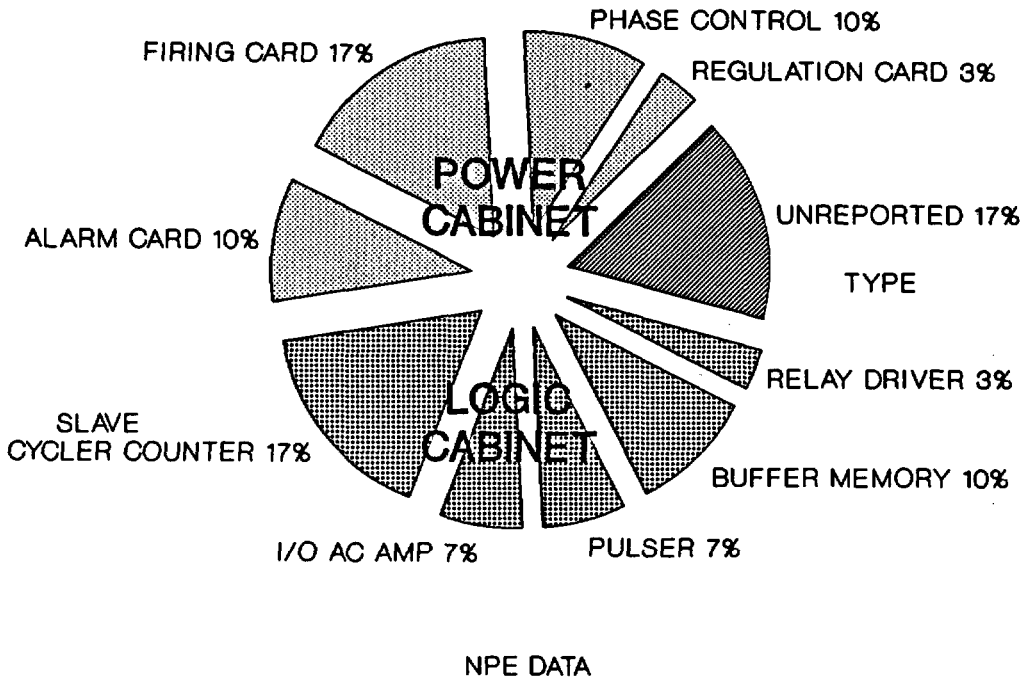

Figure 4.8 Power and logic cabinet circuit board failures

Nearly one-half of the fuse failures identified during the review of NPRDS data occurred at plants with less than 5 years of operating life. One NPRDS failure summary, submitted by a facility less than 3 years old, attributed the cause of fuse failure as a "normal end of life" event.

Of the 10 NPE articles related to fuse failures in the power cabinet, 3 were found to be caused by a degraded condition of the associated fuse hardware rather than an actual fuse failure. In one event, the corrosion of the metallic contacting surfaces of the fuse caused an excessive voltage drop across the fuse. This resulted in an urgent failure alarm for the rod control system that prevented normal movement of all rods associated with the effected power cabinet. The inspection of power cabinets following an unplanned automatic trip at another facility found 23 fuses in a degraded condition. A third NPE summary identified loose electrical connections as the root cause of several fuse failures in the power cabinet, which resulted in an unplanned trip of the reactor.

Power Supplies

The power and logic cabinets are provided with redundant sets of d-c power supplies. The loss of a single power supply in either cabinet, therefore, should not adversely affect the performance of the CRD system. The simultaneous loss of these d-c supplies has occurred, however, and has significantly affected system and plant performance.

Table 4.2 Power and logic cabinet printed circuit card failure summary (NPE data)

Logic Card	Function	Reported Failure Modes	Reported Failure Effects	Mechanism	No. of Failures	Age (In Years)
1. Regulation Card	Regulates amount of current supplied to life coils of CRDMs	Rods would not respond to demand signal. Rods could be moved in but not out.	Inability to locate and correct failure within specified time frame required reactor shutdown per tech. specs.	Normal Wear/Age	1	9
2. Phase Control	Determines correct firing point for bridge thyristors	Failures generated rod control urgent failure alarm which precludes normal movement of rods associated with the affected power cabinet.	Same as 1.	Normal Wear/Age	3	9,15,15
3. Firing Card	Provides proper wave-shape & amplitude for firing thyristors	a. Complete failure resulted in a loss of signal to associated stationary gripper coils	Group rod drop with subsequent reactor trip	Normal Wear/ High ambient conditions in vicinity of power cabinet	4	6,11,8,8
		b. Partial failure of card resulted in a continuous signal to lift coils keeping them energized & preventing completion of rod withdrawal sequence.	Manual Reactor Trip	Normal Wear	1	2
4. Alarm Card	Generates an urgent failure alarm and associated signal to provide reduced current to moveable & stationary gripper coils of all groups controlled by that power cabinet on a detected failure	a. Control rod drop without an urgent failure alarm	Manual Reactor Trip	Normal Wear/Age	1	8
		b. Failed card did not maintain position of its associated groups of rods	Manual Reactor trip	Normal Wear/Age	1	7
		c. Card failure caused rod drop by not	Manual Reactor trip	Normal Wear	1	2
5. Slave Cycle Counter	One of 6 PC cards associated with the slave cycler which sequences its associated power cabinet, & hence, the mechanisms through one step "in" or "out" for each "go" pulse from the master cycler	a. Rod control urgent failure alarm precluded normal rod movement	Same as 1	Elevated ambient temperature in vicinity of rod control cabinets	1	1

Table 4.2 Power and logic cabinet printed circuit card failure summary (Cont'd)

Logic Card	Function	Reported Failure Modes	Reported Failure Effects	Mechanism	No. of Failures	Age (In Years)
		b. Group 1 rods of SD Bank A, cont. Bank A & cont. Bank B would not move in during operability tests	Same as 1, however, problem was corrected within specified time	Normal Wear	1	1
		c. Card failure triggered a logic error resulting in zero current to gripper coils of affected CRDMs	Rod drop/high negative flux rate reactor trip	Same as 5a	1	1
		d. All rods powered from the same power cabinet failed to move during test. No urgent failure alarm. Failed card caused erroneous signals to power cabinet gripper coils	Dropped rods/reactor trip	Normal Wear	1	1
		e. Rod control system urgent failure alarm precluded normal rod movement. Rods would not step "in" with control in "manual"	Manual Reactor Trip	Same as 5a	1	1
6. I/O AC	Provides AC coupling of all output signals to power cabinet. Sends current commands for CRDM lift coils to power cabinet	a. No RPI indication of rod movement during manual rod insertion for any rod. Card failure caused loss of drive signal to lift coils of power cabinet	Manual Reactor Trip	Normal Wear/Age	2	11,1
		b. All rods powered from a single power cabinet failed to move on demand	Same as 1	Normal Wear	-	-
7. Pulser	Generates pulses that are sent to the master cycler at a rate proportional to the preset or variable speed signal	a. Card failure generated an urgent failure alarm which precludes normal rod movement	Same as 1, however, problem corrected	Normal Wear/Age	2	12,3
		b. Control rods failed to respond to demand signal during manipulation for a flux control due to pulser card that was out of calibration	Manual Reactor Trip	Normal Wear/Age	-	-

Table 4.2 Power and logic cabinet printed circuit card failure summary (Cont'd)

Logic Card	Function	Reported Failure Modes	Reported Failure Effects	Mechanism	No. of Failures	Age (In Years)
8. Supv. Buffer Memory Card	Prevents a change in command while an operation is being performed based on direction & bank selection information received from the main control board	a. Failed card generated false error signal which initiated a rod control urgent failure alarm	Same as 1a, Manual ReactorTtrip	Normal Wear	3	3,1,2
		b. Card failure resulted in immovable rods on any control bank selected	Same as 1a, however, problem corrected in specified time	Normal Wear	-	-
		c. Bank of rods would not move when selected. No urgent failure alarm	Same as 1a, however, reactor trip occurred during subsequent troubleshooting activities	Normal Wear	-	-
9. Relay Driver	Provides signal conditioning necessary to operate all relays located in logic cabinet. Control board step counters are driven directly from logic cabinet through relay drivers	Card failure resulted in loss of 1 of 2 counter indications for a bank of control rods	Manual Reactor Trip	Normal Wear/Age	1	7

All 10 failures related to d-c power supplies identified in the NPE data caused rods to drop and resulted in an unplanned trip of the reactor. Nine NPE summaries described the simultaneous loss of redundant d-c supplies. One summary identified the failure of a single logic cabinet supply as the initiator of an electrical noise spike in the rod control logic. This failure caused rods to drop due to erroneous signals to the stationary gripper coils.

Power supply failures accounted for 8 LERs (9 events) with redundant supplies failing in 5 cases due to external stresses, such as lightning (4) and high ambient temperature (1). In 8 of the 9 events, the power supply failures caused an unplanned trip of the reactor. Five LERs were associated with plants in their first or second year of operation, including those events involving lightning surges.

Discrete Components

As depicted in Figure 4.7, the failure of discrete components located within the power and logic cabinets have also appeared in the data. These components are independently mounted devices such as thyristors, relays, and transformers.

Six NPRDS reports were related to the failure of discrete components. Of those, four described failures of thyristors which control and regulate the current to associated CRDM lift, movable, and stationary gripper coils. In addition, two NPRDS failure reports addressed events initiated by malfunctioning relay circuits of the power cabinet. Discrete components were also identified as the cause of problem in the control rod drive system in five LERs and three NPE failure summaries. Two LERs and three NPE summaries identified thyristors as the cause of failure, while two transformer failures and one event involving multiple degraded components, accounted for three additional LERs.

Two of the 4 thyristor failures described in the NPRDS data occurred during refueling and, therefore, did not significantly affect plant performance. However, two additional NPRDS records and all thyristor failure events described in the NPE and LER data (two LERs and three NPE articles), resulted in an unplanned trip of the reactor.

Connectors and Wiring

Six LERs were related to wiring and connector failures within the power and logic cabinets. Four LERs describe degraded electrical connections that caused rods to drop and resulted in an unplanned trip of the reactor. Two additional events related to internal wiring contained in the LER data did not result in any unsafe operation; however, the potential existed for an undetected condition, which may have affected plant safety. In one case the failure of a soldered connection caused the loss of a protection circuit at a plant with 14 years of operation. At a plant with 21 years of operation the "control rod drop" circuit was not properly connected to the reactor protection system logic.

Loose electrical connections at a facility with 3 years of operation contributed to an unplanned trip described in one NPE failure summary. In this instance, an inspection of the power cabinets following an automatic trip from full power identified 48 connections in a degraded condition. Such failures highlight the importance of routine testing of this part of the CRD system to ensure that this interface is properly maintained.

External Equipment

The failure of equipment and systems located outside the power and logic cabinets was the subject of two NPE summaries reviewed. The inadvertent actuation of a fire suppression system near the rod control cabinet, caused by human error, was cited in one NPE summary and resulted in an unplanned trip of the reactor. A second NPE summary described an unplanned trip that was caused by the loss of a ventilation fan in the area of the rod control cabinet. The inoperable fan caused a high room temperature, which initiated a trip of thermal protection circuits for the redundant d-c power supplies.

4.2.4 Electrical Cables and Connectors

The failure of electrical cabling and connectors, which link the power cabinets to their associated CRDM operating coil stack assembly, was identified in 21 NPE summaries, 18 NPRDS records, and 8 LERs.

An additional sort of the data also identified cable connectors and receptacles, located at the CRDM coil stack assembly, to be the dominant cause of failures within this section of the CRD system. Failures of coil stack connectors contributed to 15 of the 18 related reports obtained from NPRDS and 11 of the 21 NPE articles. Additionally, 4 of the 8 LERs issued as a result of failures within this subassembly were due to defective electrical connections at the operating coil stack assembly.

The primary degradation mechanisms of coil stack connectors include mechanical wear of the plug contacts and corrosion in the area of the mating surfaces of the connector pin. Of the 11 related failures described in the NPE data, 7 were caused by open electrical circuits resulting from mechanical wear of the connector mating surfaces. Additionally, the reported failures occurred at plants that were in operation for more than 5 years. This observation may indicate a need for improving the current inspection methods or the frequency of inspection, since wear related problems of electrical connectors are due to repeated connections over time. Design changes have been made by Westinghouse which could also improve the performance of these connectors.

As may be expected, the failure of coil stack connectors, during periods of operation, significantly impacted system operability and plant performance. Of the 11 NPE summaries reviewed, 8 attributed failures of coil stack connector failures as the cause of dropped rods. Six of the events caused an unplanned trip of the reactor. Three additional NPE summaries identified faulty connectors as the cause of an inability to move rods on demand.

Cable failures contributed to six events contained in the NPE data. Two summaries described the failure of electrical penetration modules. In both cases the faulted penetration modules caused a short between conductors on the operating coils of the CRDM, and resulted in an unplanned trip of the reactor. Kapton insulation damage, on containment electrical penetration pigtails located outside containment, caused low insulation resistance test readings on 22 CRDM coil circuits at one facility. Subsequent analysis identified mechanical stress as the root cause of insulation degradation. This caused the conductor to corrode due to the intrusion of moisture.

Age degraded cable insulation caused a short circuit between coil leads in a section of cable located near the CRDM. The faulted cable, which was estimated to be 8 years old, caused the stationary coil fuse to open, resulting in a dropped control rod.

4.2.5 Rod Position Indication

Westinghouse PWRs have two independent systems for monitoring control rod position: a Bank Demand Position Indication System (BDPI) and an Individual Rod Position Indication System (IRPI). As shown in Figure 4.1, the rod position indication system was a leading contributor of reported failures. Of the 147 failure reports obtained from NPE, 43 (29%) were related to this system. The review of LER data revealed a comparable failure frequency with 45 of the 125 (36%) LER reports issued as a result of malfunctions within this system. The review of NPRDS data revealed a somewhat lower, but still significant, failure frequency with 31 of the 163 (19%) reports on equipment failure reports relating to this subsystem.

The distribution of reported component failures within this subsystem is shown in Figure 4.9. As indicated in this figure, problems related to instrument calibration drift primarily involving signal conditioning modules and associated circuitry of the analog IRPI system, were the dominant contributors of failures identified in the NPE data. Additionally, the majority of analog IRPI failures occurred at a component age of greater than 10 years.

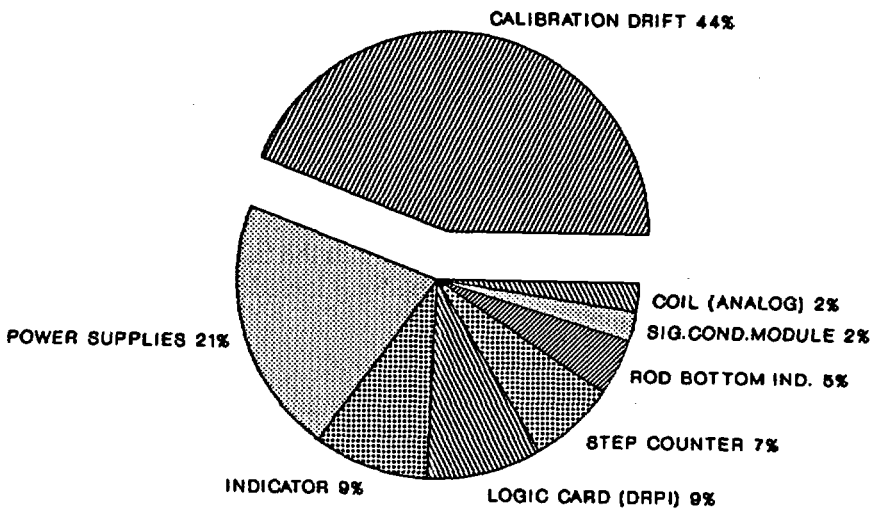

NPE DATA

Figure 4.9 Rod position indication system failure causes (1/80 to 12/88)

Of the 43 NPE articles reviewed, 19 (44%) cited instrument drift as the cause of failure. Problems related to instrument drift of the analog type of IRPI system appear to be affected by temperature variations that are induced in the CRDM during the heatup of the primary system. Such temperature fluctuations are suspected to cause a corresponding variation in the thermal equilibrium of the linear variable differential transformer (LVDT) detector coils, which are concentrically mounted on the CRDM pressure housing. Four NPE articles indicated that analog IRPI system drift is a "known generic Westinghouse concern", however, failure reports describing problems related to instrument drift were not widely distributed among reporting facilities as would be expected. For example, all four NPE articles which stated this to be a generic concern, describe problems related to instrument drift encountered at the same plant. A further review of the available data revealed that 16 of the 19 events related to instrument drift contained in the NPE data occurred at only four plants. Of the 31 failures in the RPI system that were identified in the NPRDS data, 5 were due to instrument drift. However, only 3 were related to the conditioning circuitry for the rod position signal.

Power supplies, which provide a regulated source of a-c and d-c voltage for operating the RPI system were leading contributors of component failures contained in the NPE data and accounted for 9 (20%) NPE failure summaries. It is interesting to note, however, that the review of NPRDS data did not identify any failure related to a power supply.

The majority of RPI system failures identified during this analysis did not significantly affect system or plant operation. However, the potential safety significance of misleading rod position information resulting from failures within this system should not be overlooked. For example, the failure of an analog IRPI detector coil, erroneously indicated a dropped rod, which led to a turbine runback from full power to 37%. The NPE failure summary that described this event indicated that the combined effect of a false rod drop signal and automatic turbine runback hampered the operator's attempts to stabilize the plant.

4.3 Modes, Mechanisms, and Causes of Failure

Table 4.3 summarizes the entire review and analysis of operational experience data related to the Westinghouse Control Rod Drive System and briefly describes the failure modes, causes, and mechanisms for each subcomponent identified in this study. Appendix B includes a summary of the LER data used in this study.

Table 4.3 Operating experience failure summary

1. RCCA Subassembly

Component	Failure Mode	Failure Cause	Failure Mechanism
Individual Absorber Rods	Abnormal/unexpected cladding wear	Mechanical & fatigue	Hydraulically in contact with CR guide blocks
			CR clad contact with guide blocks during insertion and withdrawal
			Intergranular stress corrosion cracking of CR casing material due to irradiation induced swelling of absorber
CRGT Support Pin	Degradation/cracking of Inconel X-750 material	Inadequate heat treatment of Alloy X-750 (Inconel) material during fabrication	Stress corrosion cracking
Spider Assembly	Dropped rods due to vane weld failure	Mechanical/material fatigue	Normal wear/age
Rod Shaft Coupling	Improper rod coupling/ latching	Spread Coupling	- cycling fatigue - mishandling during refueling
CR Guide Tube	Stuck control rod	Mechanical misalignment of CRGT	Support Pin Failure

2. CRD Subassembly

Operating Coil Stack	Open circuit	Normal wear/age	- vibration - fatigue - mechanical wear
		Corrosion	- environmental stress (steam/boric acid)
Pressure Vessel Vent Valve	Leakage	Normal wear/age	- fatigue - mechanical wear
		Human error	- improper maintenance

Table 4.3 (Cont'd)

2. CRD Subassembly (Cont'd)

Component	Failure Mode	Failure Cause	Failure Mechanism
Operating Coils	Short	Degradation of coil insulation	Environmental stress (steam/ boric acid, absorption, heat)
	Open	Normal wear/age	- conductor material fatigue - thermal stress
Latch Assembly	Control rod mis-stepping	Foreign material/ crud buildup	- small particle debris present in RCS
	Failure to withdraw	Binding	Thermal cycling
Drive Rod Assembly	Stuck drive rod	Drive rod assembly guide screw rotated out of position and became lodged in CRDM latch assembly	Manufacturing error during installation of guide screw locking pins
Shroud Cooling Fan	Fails to operate	- Mechanical wear - Fatigue	- Age/normal wear

3. Power and Logic Cabinet Subassembly

P.C. Logic Card	Incorrect output	Subcomponent failure	- environmental stress (heat/ humidity) - vibration - voltage/current transients - changes in components substrate material or performance characteristics due to age
		Connector pin	- corrosion/oxidation - vibration - mechanical wear

Table 4.3 (Cont'd)

3. Power and Logic Cabinet Subassembly (Cont'd)

Component	Failure Mode	Failure Cause	Failure Mechanism
Thyristor	Incorrect output	- loose terminal	- vibration - mechanical wear - incorrect maintenance
		- substrate degradation	- overheating - voltage/current transients
	Short to ground	Degraded insulating mounting bushing	- material fatigue due to heat/age
Fuse	Fails open	Fusible link material fatigue	- age - vibration - cyclical load transients - heat - spurious current transient
	Excessive voltage	Degraded condition of fuse contact material	- age - corrosion
DC Power Supply	Loss of output voltage	- Trip of thermal protection circuits	- Environmental stress (heat)
		- Internal component failure	- Environmental stress (heat) - Overvoltage/overcurrent transient
		- Overvoltage protection circuit actuation	- Lightning induced voltage surge
Relay	Loss of relay contact continuity	Open coil	- Environmental stress (heat)
		Degraded relay connection	- Mechanical stress - Corrosion

Figure 4.3 (Cont'd)

4. Cables/Connectors

Component	Failure Mode	Failure Cause	Failure Mechanism
CRDM Operating Coil Stack Connection	Open circuit	Normal wear/age	- Mechanical fatigue - Vibration
		Corrosion	- Environmental stress (heat, boric acid)
Containment. Electrical Penetration	Shorted	Insulation breakdown	- Environmental stress
		Insulation wear	- Vibration - Mechanical stress

5. Rod Position Indication

Analog RPI Signal	Incorrect output	Instrument calibration drift	Thermal variations in CRDM during primary system heatup
	No output	Internal component failure	- Age/normal wear - Overcurrent/overvoltage transient
Analog IRPI indicator	Incorrect rod position	Instrument calibration	Thermal variations in CRDM during primary system heatup
		Meter failure	Age/normal wear
Analog Detector Coil (LVDT)	Open	Normal wear/age	- material fatigue - Thermal stress
	Shorted	Degradation of coil insulation	Thermal stress
DC Power Supply	No output	Internal component failure	- Normal wear - Age - Overcurrent/overvoltage transient
	Degraded output	Internal component failure	- Normal wear - Age - Overcurrent/overvoltage transient

Figure 4.3 (Cont'd)

5. Rod Position Indication (Cont'd)

Component	Failure Mode	Failure Cause	Failure Mechanism
Inverter	No output	Internal component failure	- Normal wear - Age - Overcurrent/overvoltage transient
Digital RPI Logic	Incorrect output	Subcomponent failure	- Thermal stress - Age/normal wear
		Warped card	Environmental stress (heat, humidity)
Rod Bottom Indicator	No rod bottom light	Relay contact oxidation	Corrosion
	Rod bottom light would not clear	Calibration drift of rod bottom bistable	Dirty potentiometer

5. FAILURE MODES AND EFFECTS ANALYSIS

In addition to the evaluation of the operating history of the CRD system, as presented in the previous section, it is important to evaluate the system design for component interfaces and safety impact. For this aging study, a failure modes and effects analysis (FMEA) was implemented. Due to the unavailability of a PRA model and the availability of a Westinghouse failure analysis, this approach was employed rather than a specific plant PRA model, as was developed in previous system aging studies by BNL. Both approaches satisfy BNL's Aging and Life Extension Assessment Program (ALEAP) Plan for prioritizing components within the system.

The FMEA is a structured methodology for demonstrating the importance of components within the three major portions of the CRD system (the CRDM, power cabinet, and logic cabinet). This FMEA provides a qualitative assessment of parts interaction and safety impact; it also has the capability to quantify aging effects. However, the NPRDS and LER data bases for the CRD system did not provide the quantity and level of detail required to exercise this option. While there is nothing new about a FMEA that quantifies a component train, this FMEA introduces the failure rates as variables. As additional data are obtained, failure rates and frequency may be inserted into the FMEA to perform parametric studies of interest. In the mean time, an estimate of failure frequency is expressed in broad terms, as high, medium, or low and is noted. This estimate is based on the actual operating experience data described in Section 4.

A Westinghouse report[7] on the CRD system was the primary reference for this FMEA. It provided a great deal of useful information pertaining to the expected function of each of the components. However, independent evaluation was necessary in some areas due to the following limitations of the Westinghouse report:

1. System faults attributable to operator error were established as being outside the bounds of the study.

2. The main concern of the analysis was to determine the potential for a fault that could inadvertently withdraw a control rod bank.

3. The analysis conducted was oriented towards the electrical and electronic control aspects and not to its mechanical operational characteristics.

As illustrated in Table 5.1, the FMEA lists each of the primary components and briefly describes its function. It then identifies the failure cause, failure mode, and failure effects at both a system and plant level.

The qualitative assessment of safety impact is made based on the following guidelines:

High Safety Impact: The failure results in an uncontrolled change in reactivity which could challenge the plant's safety systems (reactor trip), or the failure results in the inability of the system to perform its safety function (rod insertion).

Moderate Safety Impact: The failure results in undesirable system response to command; i.e., rod speed too fast, too many steps moved, incorrect position displayed. The failure causes long term deterioration of the system, which could lead to a high safety impact if not detected and corrected in a reasonable time frame.

Low Safety Impact: The component failure does not affect the performance of the system nor its ability to perform its safety function. Annunciation is often provided to insure timely correction.

Westinghouse has recently provided data to the NRC which may permit plants to modify the negative flux rate trip in the Reactor Protection System, so that a dropped rod will not result in a reactor scram. The safety significance of a rod drop would then be considered low.

Similarly, the estimate of failure frequency is categorized as high, medium, or low based on the following observations:

High: Component failures have been experienced at more than six plants. This represents about 15% of the population.

Medium: Component failures have been experienced by at least three plants or multiple failures have occurred at one plant.

Low: Failures of this component have not been experienced or have been experienced on a very limited basis.

5.1 Control Rod Drive Mechanism

Table 5.1 summarizes the analysis for components associated with the mechanism itself. Highlighted here are the latch assemblies, which have a limited service life based on the number of control rod stepping operations; the coil assemblies, whose insulation is subject to age related degradation; and the interconnecting cables and connectors, which have also experienced the effects of aging.

Half of the components have a high safety impact due to the likelihood of their failure challenging the reactor protection system. A rod drop occurs in these cases which, under most power operating conditions, leads directly to a reactor trip. A high negative flux rate is the sensed condition which leads to the scram. In the other cases, a moderate safety impact is assigned based on the fact that the failure mode (a single stuck rod) has little impact on the shutdown capability of the rod drive control system. However, if multiple rods became stuck, the design bases of the system would be compromised.

5.2 CRD Power Cabinet

The power cabinet contains several discrete components. Many of these are assembled on circuit boards which perform well defined functions within the control rod system. For this reason, the FMEA for the power cabinet (Table 5.2) consists of components and groups of components sometimes identified by function rather than by type.

Table 5.1

Westinghouse control rod drive system FMEA; mechanism

No.	Component/Function	Failure Cause	Failure Mode	Failure Effect(sys/plant)	Failure Freq. estimate	Safety Impact	Remarks
1	latch/grip CRD shaft	wear of latch surface, fracture changing angle of surface	failure to hold shaft	dropped cluster/negative reactivity transient	low	high	The single rod drop accident is a design basis accident and is anticipated. A reactor trip signal may be initiated due to a high negative flux.
2	CRD shaft/support control rod clusters	wear of the shaft gripped surfaces, rod fracture	failure to support control rods	Same as #1	low	high	Same as #1
3	latch pin/hold latch in place	pin fracture, pin free to escape	failure to hold latch	Same as #1	low	high	Same as #1
4	stationary gripper coil/close latch on CRD shaft	open circuit, short circuit	failure to achieve and hold magnetic field	Same as #1	high	high	Same as #1
5	stationary gripper armature/close and release latches	foreign material between movable surfaces	immovable	control rod cluster fixed in position/reduced reactivity control and flux distortion	medium	moderate	There is adequate negative reactivity to overcome one stuck CR cluster.
6	movable gripper armature/close latches for lift	foreign material between movable surfaces	immovable	cannot lift CR cluster/reduced reactivity control and flux distortion	low	moderate	An immovable cluster results in a flux depression & excessive rod cluster burnup. Rod will still trip if necessary.
7	movable gripper coil/close latches for lift	open or short circuit	failure to step	cannot close lift latches/reduced reactivity control.	low	moderate	Same as #6
8	lift coil/lift movable armature	open or short circuit	failure to step	cannot reduce reactivity of one cluster/reduced reactivity control and flux distortion	low	moderate	Same as #6

Table 5.1

Westinghouse control rod drive system FMEA; mechanism

No.	Component/Function	Failure Cause	Failure Mode	Failure Effect(sys/plant)	Failure Freq. estimate	Safety Impact	Remarks
9	Cables connecting coils to power cabinets/ carry current for holding coils	insulation failure	short circuit	Loss of power to the holding coils/rod drop	medium	high	Same as #1
10	Cables connecting coils to power cabinets/ carry current for gripper and lift coils	insulation failure	short circuit	Loss of power to the gripper or lift coils/inability to lift or lower one rod cluster.	medium	moderate	Same as #6
11	Cable connectors carrying current to the holding coils	corrosion, overheating, improper assembly	open or high resistance circuit	Loss of one or more cables supplying power to the holding coils/rod drop	medium	high	Same as #1
12	Control rod binding in the thimbles	foreign material between the sliding surfaces;loss of clearances	unable to move a rod cluster	cannot change neagative reactivity of one cluster/reduced reactivity control and flux distortion	low	moderate	Same as #5

The FMEA identifies failure modes postulated for single failure within a power cabinet that results in erroneous operation of the control rods. The analysis disclosed four categories of failure effects. These are identified below along with the FMEA identifying number (1st column of table) which applies.

1. Rod motion blocked: 1, 2, 12, 13B, 15B, 17B, 19
2. Erroneous stepping of a rod or bank of rods: 3, 4, 5, 6, 14B, 15A, 16, 17A
3. Rod drop leading to reactor trip: 7, 8, 9, 10, 11, 14A, 14C, 18
4. Alarm only: 13A, 20, 21, 22

The seven failures, which result in a rod drop and reactor trip, are classified as having a high safety impact. Of these, however, only the phase sensing circuit function (item 11) has a high estimated failure frequency based on the operating experience data. As illustrated in Figure 4-8, failures in the phase control circuitry have accounted for ten percent of the power cabinet failures.

Fuses (items 8 and 10) have failed at only a moderate rate, but with important safety significance. The failure of the fuse for overload protection of the CRDM coils caused a rod drop on several occasions, although the data was not always clear about the root cause of the event. Pulling this fuse to perform a rod drop test has also resulted in a long term reduction in the force between the fuse clip and the fuse. The resulting open circuit has the same effect as a blown fuse, causing an inadvertent rod drop.

Finally, the failure of several other components within the power cabinet also results in a rod drop. To date, however, the operating experience data has shown these components to be very reliable. These components are the isolation diodes (item 7), the sampling resistor (item 9), the lamp and relay driver board (item 14), and the relays (item 18). However, it should be noted that twenty percent of the failures in the power cabinet, which resulted in a rod drop, did not contain adequate information to determine what caused the component to fail.

5.3 CRD Logic Cabinet

The logic cabinet supplies current order signals to the power cabinet and data logging signals to the demand step counters in the control room. The FMEA for the logic cabinet is presented in Table 5.3 and consists of the major functional blocks and discrete components which comprise this portion of the CRD system.

Generally, only a limited number of component failures within the cabinet result in challenges to the safety systems. The failure effects are categorized below along with the numbers in Table 5.3 that are associated with that failure.

1. Rod drop and reactor trip: 1, 2A, 7
2. Rod motion blocked: 2B, 3, 4, 5B, 8
3. Improper rod movement: 5A, 6
4. Alarm only: 9, 10, 11, 12, 13

Table 5.2

Control rod drive system FMEA; power cabinet

No.	Component/Function	Failure Cause	Failure Mode	Failure Effect(sys/plant)	Failure Freq. estimate	Safety Impact	Remarks
1	Coil power disconnect switch / provides a manual disconnect.	corrosion of contacts, fatigue of mechanical parts	open circuit	Loss of one or more phases of ac power to the half wave thyristor bridge results in excessive ripple and erroneous control of drive mechanisms.	low	low	Reduced current to the stationary, movable, or lift coils. Blocks stepping action on this CRD cluster. Detection by annunciator "Rod Control Urgent Failure."
2	Stationary coil power line fuse/ protect power cabinet from shorts.	fatigue of fuse element, vibration of fuse element, high resistance heating and thermal effects on fuse.	open circuit	Loss of one or more phases of ac power to the half wave thyristor bridge results in excessive ripple and erroneous control of drive mechanisms.	medium	low	Same as #1
3	Line filter (choke) to smooth ripples for coil current	aging corrosion, cyclic fatigue	open circuits	Loss of a phase of ac power to a half wave results in an incorrect current profile (excessive ripple)with possible concomitant erroneous stepping of the drive mechanisms	low	low	This fault initiates a power cabinet urgent alarm which blocks rod motion.
4	Surge protection (Voltrap)/for stationary,lift and movable coil power	aging of semiconductor, temperature effects, moisture ingress	short circuit	Phase imbalance, no voltage across shorted surge protector, excessive ripple	medium	low	Same as #3.

Table 5.2

Control rod drive system FMEA; power cabinet

No.	Component/Function	Failure Cause	Failure Mode	Failure Effect(sys/plant)	Failure Freq. estimate	Safety Impact	Remarks
5	Half wave thyristor bridge rectifier/ provide dc power to the coils	manufacturing defect in semiconductor, moisture ingress, defective heat sink with excessive temperature	open or short circuit	Incorrect current profile, excessive ripple/inability to properly move effected rod cluster	high	low	Same as #3
6	Multiplex thyristor switch for coils.	aging of semiconductor, temperature effects, moisture ingress	thyristor switch fails open or shorts	A loss of profiled current to coils of rod drive mechanism results in erroneous stepping.	low	low	Same as #3.
7	Isolation diodes for the stationary coils/ Provides circuit isolation during reactor trip and rod stepping to prevent interactions between stationary or movable coils of different rods	aging of semiconductor, temperature effects, moisture ingress	diode fails open	Loss of holding current to the rod mechanism thus allowing the rod to drop.	low	high	The single rod drop accident is a design basis accident and is anticipated. A reactor trip signal may be initiated due to a high negative flux.
8	Overload fuse for the coils/provides power overload protection of the components installed in series with the coil	fatigue of fuse element, vibration, high resistance heating and thermal effects	fails open	Failure results in an open circuit that blocks profiled dc current flow to the stationary coil which releases the rod	medium	high	Same as #7

Table 5.2

Control rod drive system FMEA: power cabinet

No.	Component/Function	Failure Cause	Failure Mode	Failure Effect(sys/plant)	Failure Freq. estimate	Safety Impact	Remarks
9	Sampling resistor for current measurement for coils, provides a measurement of the coil current to an auctioneering amplifier for the regulation of CRDM coil currents.	aging due to moisture ingress, thermal or chemical effects	fails open	Failure blocks current flow to the CRDM coils causing loss of holding current to the CRDM thereby allowing rod drop into the core.	low	high	The control system is feedback regulated. The auctioneering amplifier selects the highest current feedback signal from one of 4 sampling resistors from a group of CRDMs with a reference signal indicating the desired current.
10	Overload fuse for the phase sensing transformer. Provides power overload protection to the phase sensing transformer and phase shifting components.	aging of fuse element, vibration, high resistance heating, thermal effects, corrosion.	open circuit	Failure results in a loss o the sample voltage to the phase control pulse generators. This results in erroneous SCR firing in the regulator supplying the profiled dc current to the stationary, movable and lift coils. The effect on system operation is that rod drop may occur.	medium	high	Same as #7
11	Functional block: phase sensing and phase shifting circuit. Provides sample voltage signals to the phase control firing of the SCRs in the regulator bridge.	aging due to operation in excessive ambient temperatures, moisture, chemical action in the semi-conductors.	fails to provide the phase control signal	same as 10	high	high	Same as #7

Table 5.2

Control rod drive system; power cabinet

No.	Component/Function	Failure Cause	Failure Mode	Failure Effect(sys/plant)	Failure Freq. estimate	Safety Impact	Remarks
12	Functional block: failure detector #1 for stationary coils. Samples errors in system performance of the firing of SCRs in the regulator bridge.	Same as # 11	High error signal output	Erroneous alarm signal to alarm circuitry card resulting in a power cabinet alarm condition that supplies reduced current to the stationary and movable coils of the CRDMs and block stepping of drive mechanisms for rod movement.	low	low	Stepping action of the CRDMs is blocked. Detected by a separate phase and regulation failure by PC board for monitoring commutation of each thyristor bridge supplying current to CRDMs. Alarmed as "urgent"
13	Functional block: alarm circuits. Provides non-urgent and urgent alarm signals to initiate actuation of plant annunciator for failure of a 24 Vdc power supply (non-urgent), alarm error signal (E) from failure of detectors 1 and 2 (urgent) and for a regulation failure of zero current to the stationary and movable coils at the same time (urgent). Also provides logic control to command urgent orders to the stationary, movable and lift coils of the CRDMs.	Same as #11	A. Low non-urgent alarm signal output	Erroneous alarm signals to the firing circuit card. No immediate effect on stepping of the drive mechanism for rod movements.	medium	low	A failure detector is provided by monitoring of the zero current to the stationary and movable coils.
			B. High urgent alarm signal output	Erroneous alarm signals to firing circuit card and to regulation card resulting in a power cabinet alarm condition that applies reduced current to the stationary and movable coils of the rod drive mechanisms for rod movement.	medium	low	Urgent alarm due to reduced current to the stationary and movable coils and zero current to the lift coils of the rod drive mechanisms

Table 5.2

Control rod drive system FMEA; power cabinet

No.	Component/Function	Failure Cause	Failure Mode	Failure Effect(sys/plant)	Failure Freq. estimate	Safety Impact	Remarks
14	Functional Block: lamp/relay driver and alarm circuits. Provides for the processing of multiplex signals and cycling signals received from the Logic Cabinet (via the firing circuit card) to energize multiplex relays and a cycling indicator lamp. Also provides logic control to process an alarm reset from the Logic Cabinet.	Same as # 11	A. High driver output. Signal processing card failure	Failure results in a loss of multiplexing control and loss of local monitoring capabilities for cycling indication of a slave cycler. A loss of multiplex control causes a loss of profiled dc current to the mechanisms resulting in erroneous stepping and consequent rod drop.	low	high	Same as # 7
			B. Low Driver Output. Signal processing card failure.	Failure results in erroneous multiplexing leading to the profiled current being applied at the same time to two groups of rod drive mechanisms resulting in incorrect stepping of the rod drive mechanisms that block rod movement.	low	low	Same as # 3
			C. Low reset signal output.	Failure results in a constant command for full dc current to the stationary coils resulting in erroneous stepping.	low	low	Stationary coils are alarmed to detect full current being applied to the stationary coils for too long.
15	Functional Block: I/O receiver and SCR gate firing circuits for the stationary coils, movable coils, or lift coils.	Same as # 11	A. Erroneous gate control output, firing card failure.	Failure results in no or spurious firing of SCR bridge current regulator resulting in excessive ripple and erroneous rod stepping.	high	moderate	Three gate firing transformers circuits are provided on the PC-board for separate firing of the bridge SCRs and 3 I/O transformers provide coupling to the Logic Cabinet.

Table 5.2

Control rod drive system FMEA; power cabinet

No.	Component/Function	Failure Cause	Failure Mode	Failure Effect(sys/plant)	Failure Freq. estimate	Safety Impact	Remarks
15	(Continued)		B. Erroneous reference current. Firing circuit card failure.	Failure causes incorrect current control to the auctioneering amplifier with improper error signals for generation of the phase control firing pulses for the SCR bridge with wrong current to the coils. CR movement is blocked and a rod drop is possible.	high	moderate	Detection: the output waveform of the regulator is alarm monitored. SCR failure initiates a Power Cabinet alarm.
16	Functional block: phase control pulse generator for coils.	Same as # 11	Erroneous control signal output. Phase control card failure.	Failure results in improper firing of SCR phase producing a wrong output from the SCR bridge resulting in erroneous stepping of rods.	medium	low	Three phase sense and control circuits on the PC board provide a control signal for phase firing of SCRs. Detection by bridge current alarm monitor to initiate a Power Cabinet urgent alarm.
17	Functional block auctioneering amplifier and saturation ripple voltage detectors for the stationary coils.	Same as # 11	A. Incorrect dc error voltage output (VERR). Regulation card failure.	Failure results in early or late firing of the bridge SCRs resulting in full or zero current to the coils. Wrong current waveform and erroneous stepping of CRDMs for rod movement.	low	moderate	The error voltage (VERR) is proportional to the difference between the commanded current and the highest of the auctioneered feedback signals. The commanded current is an analog of the digital command from the Logic Cabinet. Failure initiates a Power Cabinet alarm.
			B. High sensing voltage output. Regulation card failure.	Failure results in a spurious alarm condition at the power cabinet resulting in reduced current being applied to the stationary and movable coils and zero current to the lift coils to block stepping of the CRDMs.	low	low	

Table 5.2

Control rod drive system FMEA; power cabinet

No.	Component/Function	Failure Cause	Failure Mode	Failure Effect(sys/plant)	Failure Freq. estimate	Safety Impact	Remarks
18	Functional block relay switching of movable and lift coils, relay and arc suppressor.	Aging of relay insulation, contact welding, humidity and corrosion on connections and insulation	Normally open contacts fail open, relay failure.	Loss of 120VAC power to the gate firing transformers of the multiplexing gate firing circuit results in loss of SCR firing to allow a group of rods to drop.	low	high	Same as # 7
19	Functional block multiplexing gate firing circuit for the lift coils	Same as # 11	Low gate current output, trigger chassis component failure.	Failure results in a loss of dc current to the lift coils.	medium	low	Gate firing transformer provides gate turn-on current to the SCRs.
20	Auctioneering diode assembly for the +/-24 VDC cabinet power/auctioneers power from 4 supplies	Same as # 7	Diode opens	Reduction of redundancy for 24 VDC for power cabinet circuits/ detected as a non-urgent failure.	low	low	Annunciation only.
21	Positive and Negative DC power supplies/provide power to alarm and control circuits in the Power Cabinet.	Same as # 7	Power supply failure	Loss of one power supply reduces the redundancy of that voltage in the Power Cabinet/ annunciated as a non-urgent failure.	high	low	Annunication only.
22	Overload fuse for the +/-24 VDC power supplies/provide overload protection for the power supplies	Same as # 2	open fuse	Same as #21	medium	low	Annunication only.

There are three logic cabinet failures which lead to a rod drop and subsequent reactor trip; therefore, they are classified as a high safety impact. These are failure of the pulse shaper circuit board, the supervisory memory card, or one of the slave cycler boards. As observed from the operating experience data (Figure 4.8), the input/output (I/O) circuitry and the supervisor buffer memory functions each comprised nearly 10% of the reported failures associated with the logic cabinet. The slave cycler board was the cause of failure for 17% of the logic cabinet failures. Therefore, it is categorized as a high failure frequency, while the first two are estimated as medium failure frequencies.

Table 5.3

Control rod drive system FMEA; logic cabinet

No.	Component/Function	Failure Cause	Failure Mode	Failure Effect(sys/plant)	Failure Freq. estimate	Safety Impact	Remarks
1	I/O input circuit provides signal coupling between the Logic Cabinet (LC) and the IN-HOLD-OUT lever switch on the control board for manual rod movements.	Aging due to moisture ingress, defective heat sink, excessive ambient operating temperature. Possibly a manufacturing defect.	Pulse shaper card failure	Constant high "not" signal for rod movements results in unidirectional movement of control rod banks with improper reactivity control for load following/ detected as a rod insertion limit alarm by the rod position indicating system and a reactor trip on overtemperature.	medium	high	The circuit consists of a PC-board pulse shaper which provides 8 circuits into the logic cabinet. The circuits are identical but share a common supply.
2	Supervisory memory buffer and control/ Provides functions that include: 1) stops the system after ensuring that all slave cyclers are allowed to finish, 2) provides pulses to drive the master cycler until the first slave cycler begins, 3) processes command signals for manual operation.	same as # 1	A. Memory card failure (high output).	Failure results in a spurious command signal with same effect as item 1	medium	high	Two types of PC boards are used for the buffer memory and control circuit and the buffer memory is two cards. Each card contains 4 separate buffer memories which share a common board power source.
			B. Low bank overlap inhibit output/supervisory logic card failure	Spurious command signals inhibit control bank operation	medium	low	

Table 5.3

Control rod drive system FMEA; logic cabinet

No.	Component/Function	Failure Cause	Failure Mode	Failure Effect(sys/plant)	Failure Freq. estimate	Safety Impact	Remarks
3	Pulser, oscillator and strobe generator/ provide 10 clock pulses for initiation of slave cycler to control rate of rod bank stepping.	Same as # 1	No clock pulse from pulser/pulser card failure.	Loss of clock pulses results in blocking rod movement.	medium	low	The pulser card has two relaxation oscillators that free run if an inhibit signal is not applied. One of the oscillators sets the time for a rod group step and the other sets the time between stepping.
4	Local alarm reset switch/ provides for local reset of alarm circuits in the LC.	Aging, contact welding, spring fatigue or corrosion, lubricant	Shorted contacts/push-button switch failure.	Short applies a reset signal to the supervisory memory buffer and control logic resulting in spurious reset signals. Control rod operation is blocked.	low	low	
5	Master cycler/provides group "go" pulses to bank overlap circuit and "go" pulses to the slave cyclers for the selection of a rod group or groups within a rod bank selected for movement.	Same as # 1	A. High fast pulse "go not" output/master cycler logic card.	Constant logic high signal to pulser circuit supervisory buffer memory and control circuits. Results in slow response to rod command.	low	low	Four types of PC boards are used to form the master cycler.
			B. Slave cycler "go" low/same as D or master cycler card failure.	A constant "go" low causes a loss of slave cycler operation and blocked rod movement.	medium	low	

Table 5.3

Control rod drive system FMEA; logic cabinet

No.	Component/Function	Failure Cause	Failure Mode	Failure Effect(sys/plant)	Failure Freq. estimate	Safety Impact	Remarks
6	Local bank overlap reset switch	Aging of contact, corrosion, arcing, wear fatigue, moisture.	Contacts short/pushbutton switch failure.	Shorted switch applies a reset signal to all counter cards and the decoder card that resets the bank overlap control circuit to a start-up sequence for moving control banks out of core. Improper rod movement may result.	low	moderate	If system is in operation when switch fails, there is no effect until rod movement ceases.
7	Slave cycler	Same as # 1	Circuit board failure.	Incorrect current order to power cabinet with wrong stepping of CRDMs. Failure can lead to an alarm at the PC that blocks rod movement and drops rod group.	high	high	The slave cycler generates commands to the power cabinet for decoding into dc profile currents. Six PC boards for the slave cycler decode the binary numbers generated by the slave cycler to develop the current commands.
8	Alarm circuit for the logic cabinet/ processing of urgent and non-urgent alarm signals entering the logic cabinet from the power cabinet, processing of urgent alarms from the slave cycler and oscillator and fault detection for removal of a PC board & logic power supply failure.	Same as # 1	Supervisory logic card failure or failure detector card, high or low alarm output.	Spurious urgent alarm signal actuating annunciator and an inhibit signal blocking control rod movement.	low	low	Two boards form the alarm circuit. The supervisory logic card processes internally generated urgent alarm signals and provides control logic for processing urgent alarm signals from the power cabinet.

Table 5.3

Control rod drive system FMEA; logic cabinet

No.	Component/Function	Failure Cause	Failure Mode	Failure Effect(sys/plant)	Failure Freq. estimate	Safety Impact	Remarks
9	Data logging relays/provides step pulses to indicate when a rod bank is started or finishing a bank movement step.	Aging of relay insulation, contact welding, humidity and corrosion on corrections and insulation.	Relay failure	Loss of address inputs to the plant computer and to the rod position indicator causing erroneous operation of the rod deviation monitor. Rod deviation alarm to alert the operator of a fault.	low	low	Formed of 2 PC boards: Each relay card provides 6 driver circuits for a relay or a step counter. They share the same power supply.
10	DC power supplies, 120 VAC source voltage filters; noise suppressionof main and auxiliary power feeding redundant 100V and +/- 15.5 VDC power supplies.	Aging of dielectric	Filter opens or filter shorts/ filter inductor or capacitor failure.	Loss of 120 VAC to main 100 VDC and +-15.5 VDC power supplies reduce rednundancy of power supplies. No immediate effect on system for rod movement/ output of dc supply is monitored. Failure results in a non-urgent alarm condition.	medium	low	Power supplies receive power from MG sets. If the MG power fails, the aux. power will assume the logic cabinet load without loss of control.
11	Power supplies main +15.5 VDC/ power to logic cabinet alarm and control circuits.	aging of transformer insulation due to humidity, excessive operating temperature, manufacturing defect, fuse fatigue, corrosion.	Loss of main 15.5 VDC power/ fuse failure, failure of electronic components, over voltage protection failure	Loss of +15.5 VDC supply reduces the redundancy. NO immediate system effect non-urgent alarm.	medium	low	The redundant supplies are auctioneered to select the most positive voltage. Both AC lines are fused.

Table 5.3

Control rod drive system FMEA; logic cabinet

No.	Component/Function	Failure Cause	Failure Mode	Failure Effect(sys/plant)	Failure Freq. estimate	Safety Impact	Remarks
12	Capacitor filter assembly/ filtering of +/- 15.5 VDC output of supplies.	Aging of electrolyte, fatigue.	Filter shorts/ capacitor fails	Loss of + or - 15.5 VDC reduces the redundancy of logic power. No immediate system effect.	medium	low	Same as 11
13	Capacitor filter assembly/ filtering of + 100 VDC output of supplies.	Aging of electrolyte, fatigue.	Filter shorts/ capacitor fails	Loss of + 100 VDC reduces the redundancy of relay power. No immediate system effect.	medium	low	Same as 10

6. REVIEW AND EVALUATION OF INSPECTION, SURVEILLANCE, MONITORING AND MAINTENANCE

Existing methods for inspection, surveillance, monitoring and maintenance (I,S,M&M) were evaluated to determine their effectiveness for detecting and mitigating the effects of aging of the Westinghouse Control Rod Drive System. This section includes a discussion of the results of an industry survey on the subject of I, S, M&M, analyses of the existing regulatory requirements for testing and inspection (technical specifications), and presents several potential techniques for detecting degradation of the CRD system.

6.1 Evaluation of Current Maintenance Practices

Industry Survey Results

After reviewing the design of the Westinghouse CRD system and assessing the operating experience with this system, a questionnaire was developed. The purpose of this survey was to expand the information base to include insights from as many specific plants as possible, including more detailed information on system modifications, maintenance, and operations.

Responses to the questionnaire were received from ten utilities representing fifteen operating units. These responses were coordinated and compiled by the EPRI Equipment Qualification Advisory Group and were transmitted to the NRC and BNL through NUMARC. The results reflect input from older plants offering their considerable operating experience and from newer plants reflecting design refinements. One utility also forwarded a system description and a maintenance procedure. A copy of the questionnaire is in Appendix C.

The first section of the questionnaire contained detailed questions about operating and maintenance experience and was divided into subsections by component and location - inside or outside containment. Before describing these results, it is important to list some background on the respondents (Table 6.1).

It is also important to put into perspective the degree of repairs, replacements or modifications which have been made to various segments of the CRD system at these plants.

1. RCCA and Guide Tube

Eight of the 15 plants responded positively to indications of RCCA and guide tube wear. Of particular interest is the following:

- Three plants (A, B, and C) reported replacing all rods within the last three years due to excessive wear.

- One new plant (E) reported replacing 5 RCCAs after only 2 cycles due to guide card wear. One RCCA had to be replaced due to bulging (hafnium hydride).

- Two plants (I and J) indicated that about 5% of the rods had experienced cracking of the rodlet tips.

Table 6.1 Survey respondents

W Plant	# of CRDMs	Age of Plant[1]	Operating Time Accumulated on Present CRDMs	Rod Position Indicator System	Rod Type
A	29	18	14	Analog	Silver/Indium/Cadmium
B	29	18	14	"	"
C	29	15	13.2	"	"
D	52	3	2.5	Digital	Hafnium
E	61	3.8	3.1	"	"
F	29	20	17.5	"	Silver/Indium/Cadmium
G	53	10	2	"	Hafnium
H	53	9	1	"	Hafnium
I	53	16	15	Analog	Silver/Indium/Cadmium
J	53	16	15	"	"
K	53	10	2.3	Digital	Hafnium[2]
L	53	11	4.4	"	"
M	48	2	2	Analog	Silver/Indium Cadium
N	48	2	2	Digital	"
O	24	29	29[3]	Analog	"

1 Years since initial criticality.

2 Changing to W enhanced Silver/Indium/Cadmium in future (chromium plated tubing).

3 One drive mechanism at year 12 replaced due to galling of internal mechanism.

- Four plants (C, E, K & L) relocated their fully withdrawn position for shutdown bank rods by 3 steps to avoid localized fretting wear. (Westinghouse recommendation to "distribute" wear)

- Two plants (A and B) circumvented guide tube wear problems by replacing all of the upper reactor internals within the last three years.

2. Pressure Boundary Components

Information was requested on the welds associated with the latch housing to pressure vessel head, and the rod travel housing to latch housing.

- Plant (I) indicated that a seal weld on a housing for a partial length RCCA housing had to be repaired due to leakage.

- Plant D modified the design of the vent valve.

- A pinhole leak in the weld at the top of the guide tube housing was discovered at Plant E. This was repaired by welding.

3. Coil Stack Assembly

- One stationary gripper coil, after 13 years of service, was replaced at Plant A due to a failure.
- Twelve stationary gripper coils were replaced after 9 years of service at Plant J.
- All coils were replaced on one mechanism at Plant I due to a reactor coolant leak.

4. Cables and Connectors

- Plants A and B noted that a total replacement of cables and connectors is planned for 1990/1991.
- Plants M and N stated that changes in containment temperature have caused connector problems, especially with the rod position indication system.
- Plant C reported that the original rubber cables were replaced with an asbestos type when they became brittle.
- Cable ends at Plant E were redressed due to ground loops which developed.
- Plants K and L reported cases where connector pins required straightening.
- Plant O replaced cables and connectors; a silicone rubber insulation is used.

5. Rod Position Indicator Coils and Wiring (In containment)

- Plant D noted that the connection pins required tightening and that one cable was replaced after one cycle.
- Plants K and L replaced cables due to cracking insulation; bent pins were also straightened.
- Plants D and F reported modifications to the RPI subsystem; Plant D added more coils because 4 rods were changed from a shutdown to a control bank, and plant F upgraded their system to a multiplexing system. Plant O indicated that while the basic design remains unchanged, a different wire, winding process, insulation and varnish are used.

6. Outside Containment Components (Cable, Power and Logic Cabinets)

- Plant C reported that the power supplies required refurbishment by Westinghouse during the refueling outage in 1989.
- Plants I and J reported failures of power supplies following lightning strikes at the site.

- Plants A, B, C, I, J, M, and O have an analog rod position indication system, while the remaining plants use a digital system.

- Plant E stated that a Westinghouse field change notice (FCN) was implemented on the RPI logic cabinet to allow connection of test equipment to record rod drop data.

- Plants K and L indicated that portable air conditioning units are used to cool the rod drive cabinets during the summer.

- Plants A, B, C, and O reported that the forced ventilation system was modified. Plants A and B altered the direction of air flow in order to provide cooler air to the coils, and plant C installed a shroud cooling system. Plant O reported that the system was converted from natural to forced convection cooling. The air flow was also "channeled" to high temperature areas. On occasions where cooling was lost, the resultant overheating required coil replacement.

The survey results which address preventive maintenance (PM) for the CRD system have been separated into three categories:

- mechanical components within containment,
- electrical components within containment, and
- components outside of containment.

The mechanical components within containment are the CRD mechanism (drive rod and latch), the control rod (RCCA and guide tube), and the ventilation system. The ventilation system is not within the boundary of this study; however its operability directly affects performance and aging of the CRD system. In addition, the review of operating experience indicated several occurrences related to problems with seal welds and vent valves. The questionnaire, therefore, was directed to solicit information on these areas.

Table 6.2 is a summary of the survey results for PM on the mechanical components. It is interesting to note that one of the newer plants (E) is employing both eddy current testing and profilometry in its preventive maintenance program. Eddy current testing uses a probe which produces an alternating electromagnetic field. This field induces eddy currents in a conductive material which can reveal differences in the physical properties. Plants I and J noted that eddy current testing was used to detect excessive fretting wear on the RCCAs. Profilometry uses an instrument for measuring the roughness of a surface and dimensional changes by a diamond pointed tracer arm attached to a coil in an electric field. Movement of the arm across the surface induces a current proportional to the surface roughness or diameter. These methods are discussed further in Section 6.3.5.

The questions for electrical equipment within containment dealt with the coil stack assembly (lift, stationary gripper, and movable gripper coils), the cable and connector assemblies for the coils, and the rod position indication subsystem wiring. The preventive maintenance on this equipment (Table 6.3) is performed during refueling outages and consists primarily of insulation resistance checks (megger), conductor resistance tests, and visual inspections for signs of degradation such as wear, corrosion, or looseness.

Table 6.2 Preventive maintenance for mechanical components within containment

Component	Maintenance Practice	Plants Involved & Frequency*
RCCA	Eddy current testing	E,I,J
	Profilometry	E
Latches	None	N/A
Drive Rod	Visual inspection for wear and crud buildup	F
Seal Welds	NDE	M,N,C-10% every 10 years
	Hydro	A,B,C,F,K,L
	Remote visual	I,J
Vent Valves/Plugs	Hydro	A,B,I,J
Ventilation	Clean and inspect	All
	Lubricate fan bearings	A,D,E,F,M,N
	Megger motors	D,F,I,J,K,L,M,N

*Interval is refueling unless otherwise noted.

Of a more unique nature is the monitoring of coil stack degradation by plants A, B, I and J. Coil traces of the in and out control rod motions are taken before startup, following a refueling outage. This technique can be performed at any time during operation as well to detect changes in coil characteristics. Plants I and J also perform an inspection of all electrical watertight seal connections during each refueling outage.

Table 6.3 summarizes the preventive maintenance for the CRD system electrical components within containment. It should be noted that all plants (except E) reported that they perform some form of electrical testing on the CRDM and rod position coils. All plants (except E) reported that they routinely inspect the electrical connectors for any signs of degradation.

Table 6.3 Preventive maintenance practices for electrical components within containment

Component	Practice	Plants Involved & Frequency*
Coil stack assembly	Insulation resistance	D,F,G,H,I,J,O
	Coil resistance	All except E
	Coil timing signature traces	A,B,I,J
	Polarity check	F,K,L
Cable	Insulation resistance	D,F,I,J,K,L,O
	Visual	A,B,C,E,M,N
Connectors	Inspect for tightness	All except F
	Check watertight seal	I,J
Rod Position Indication sub-system wiring	Visual	A,B,I,J
	Resistance measurements	A,B,C,D,F,I,J,K,L,O
	Insulation resistances	F,I,J

*All frequency intervals are refueling outage.

The power sources and logic necessary for properly operating the system are generally located outside of containment. This equipment is, therefore, accessible to personnel during power operation. As described in Section 2, this portion of the system is continuously monitored during operation to a certain degree through sensors which communicate with annunciators in or near the control room. Abnormal conditions in the power supply output, for instance, produce an alarm which would result in corrective actions. A unique practice among the surveyed plants exists at Plants K and L. Their preventive maintenance program includes replacing all of the 10 ampere fuses of the stationary and moveable gripper coils at a three-year frequency. Plants I and J replace selected control fuses in the logic cabinets every refueling outage. This replacement mitigates the effects of aging, which may cause the fuses to prematurely fail.

The preventive maintenance for CRD system components outside of containment are summarized in Table 6.4. The preventive maintenance of the MG Set, while not a part of this study, is included here for background information. While this equipment is not considered to be safety related, its failure results in a loss of power to the coils and a reactor trip.

Table 6.4 Preventive maintenance practices for components outside of containment

Component	Practice	Plants Involved & Frequency*
Cables, Connectors and Terminations	Insulation resistance	D,F,G,H,K,L,O
	Resistance check	D,F,O
Power Supplies	Visual inspection	A,B,O
	Calibrate protective devices	F,I,J,K,L
	Vendor refurbishment	C
	Functional test	F,I,J,K,L,M,N,O
Control/Logic Cabinets	Visual inspection	A,B,E,G,H
	Vendor refurbishment	C,F,M,N
	Replace fuses	I,J,K,L - 3 yrs
	Measure cabinet temperature	G,H,K,L
	Timing/functional test	K,L
MG Set	Grease bearings	A,B,E
	Check vibration	A,B

*All PM intervals are refueling unless specifically stated otherwise.

As part of the survey, the utilities were asked to indicate whether they had initiated a reliability or trend analysis program for the system. Eight of the fifteen plants responded affirmatively with the following additional information:

- One plant trends CRDM coil temperatures.
- One uses the NPRDS program for detecting trends plant-wide.
- Six plants use their work request system to monitor component and system failures.
- Two plants also obtain reliability information from their parts replacement program.
- Two plants include surveillance test results in their trend analysis in addition to the work requests.

The survey also asked for the utility's opinion regarding the monitored parameters, tests or inspections which are most important for assuring the operational readiness of the CRD system. The results are depicted in Table 6.5 and clearly reveal the opinion that testing which is required by the technical specifications is useful for determining system performance. These specific requirements, and how they are addressed by utilities, are discussed further in Section 6.2. Other favorable means for determining and maintaining the operational readiness are through circuit tests, calibrations of components, and thorough visual inspections.

Table 6.5 Determining and maintaining CRD system operational Readiness (15 respondents - most identified 3 useful means)

	Number of Respondents
Surveillance Testing - Rod Exercise - Rod Drop Timing	13
Electrical Preventive Maintenance - Insulation Resistance Tests - Coil Signature Traces - CRDM Coil Fuse Replacement	9
Inspection/Calibration - RPIS Calibration - Power Supply Checks - 18-month Rod Control System Inspection	4

Summary of Current Practices

A survey of the current practices at nuclear power plants related to the Westinghouse supplied control rod drive system has been completed. Responses obtained from 15 plants were evaluated and are summarized as follows:

- The utilities agree that the activities required by the technical specifications (rod drop timing test and rod exercise test) are beneficial in determining the operational readiness of the system.
- Preventive maintenance for electrical components within containment (cable, connectors, and coils) dominate the overall maintenance resources applied to this system.
- A few plants are using relatively advanced techniques for detecting mechanical and electrical degradation. These techniques include eddy current testing, profilometry, and circuit signature analysis.
- Most of the utilities modified various components of the system.

Those modifications which address the mitigation of aging effects include:

1. Replacement of the upper reactor vessel internals in response to degrading support pins on the control rod guide tubes.
2. Upgrade from an analog rod position indication system which was subject to drift problems, to a digital multiplexing design.

3. Replacement of the original rubber jacketed cables with an asbestos type.

4. Permanently installed equipment to facilitate required/desired system testing. This modification addresses the influence of testing on aging (disconnecting/ reconnecting), as well as the effect of human interaction (minimizes the potential for test and maintenance error).

6.2 Westinghouse Standard Technical Specifications

The reactivity control systems for Westinghouse plants must conform to specific design, operating, and surveillance criteria as established by the technical specifications (tech specs). These specs establish requirements for assembly position, drop time, and design, as well as the minimum surveillance required to demonstrate compliance[13].

6.2.1 CRD Position Requirements

The reactivity control system is required for reactor control and shutdown, therefore it is essential that the control rods be positioned correctly and that instrumentation be available and operational to accurately determine their positions. The tech specs require that all control rods, which are inserted in the core, be operational and that the indicated position be within ± 12 steps (approx. 7.5 in.) of the demand position of the group step counter. Likewise, the control rod and the demand position indication system is required to be operable and capable of determining the control rod position within ± 12 steps. If a rod is inoperable or unable to trip, the shutdown margin must be recalculated and verified to be sufficient within 1 hour, or the plant must be brought to hot standby within 6 hours. If more than one rod is mispositioned, the plant must also be in hot standby in 6 hours.

The control rod positions and indicating system are verified to be correct and operational once every 12 hours. Normally this is done by comparing the readouts from both. If the rod position deviation monitor is inoperable, verification is performed every 4 hours by alternate means until the system is repaired and operable. Also, the tech specs require that each full length control rod not inserted be demonstrated to be operable at least once every 31 days by moving them at least 10 steps in any one direction.

During hot standby, hot shutdown, and cold shutdown, one rod position indicator, excluding the demand position indicator, shall be operable and capable of determining rod position within ± 12 steps. This is verified by performing a channel functional test once every 18 months.

In addition to the requirements for general position indication, all shutdown rods are required to be fully withdrawn. This is verified once every 12 hours after reaching criticality and every 15 minutes during reactor startup.

Limitations on the use of part length control rods are included in the tech specs, but since these are no longer used, they are not included in this discussion.

6.2.2 Control Rod Drop Time

The standard tech specs require that the drop time be less than or equal to 2.2 seconds for all full length shutdown and control rods, with all reactor coolant pumps operating and with the average coolant temperature greater than or equal to 541°F. The 2.2 seconds shall be measured from the beginning of decay of stationary gripper coil voltage to dashpot entry. If a rod fails this drop time requirement, then the cause must be identified and corrective action taken prior to startup or continued power operation. If all the reactor coolant pumps are not operational at the time of the test, then limits are placed on reactor thermal power.

Drop time tests are performed on all rods at least once every 18 months, as well as each time work is performed on the CRDM, which could affect drop time and following the removal of the reactor head.

6.2.3 Design Requirements

The standard tech specs require that all full length control rods contain a nominal 142 inches of absorber material. Additionally, the nominal values of absorber material shall be 80% silver, 15% indium, and 5% cadmium. The control rods shall be stainless steel clad.

The tech specs reference the ASME Boiler and Pressure Vessel Code as applicable to Class 1 components. Section XI Rules for Inservice Inspection of Nuclear Power Plant Components, requires that the welds on 10% of the peripheral CRD housings be subjected to a surface inspection each inspection period. In addition, the CRD housing bolts, studs, and nuts must be visually inspected following each disassembly. As per the tech specs, any component failing an inspection must be returned to full operability before any increase in coolant temperature, above the minimum temperature required for non-destructive testing (NDT), can occur.

6.2.4 Operating Practices

Typically, utilities adopt individual procedures to perform tests which demonstrate compliance with specific tech spec requirements, such as drop time, control rod stepping, and operability verification of rod positioning systems. Procedures for operation dictate rod group positioning, withdrawal, or insertion requirements.

The procedure for verifying control rod drop time uses a high speed recorder, which produces a chart depicting rod position and stationary gripper current. The initiation of the rod drop can be seen, as well as the entry of the rods into the dashpot, by observing the induced voltage trace. Only one bank of rods is withdrawn at a time, and each rod is tested individually. Some plants utilize a Rod Drop Test Cart which provides testing of multiple rods.

Verification and calibration of the rod position indication systems following refueling consist of a series of specific control bank insertions and withdrawals. The rod position is measured in terms of DC voltage. The position as indicated by the group step counters is compared to the rod position measurement to determine if the position indication system is accurate to the ± 12 steps.

Generally, during normal plant operation the required verifications for rod positioning are accomplished without rod movement. Rod exercising, required at least every 31 days, only minimally impact control rod wear, and may provide a benefit of relocating the rod, and thereby limiting any flow induced wear with the guide thimbles or upper internals.

6.3 Inspection, Surveillance, Monitoring, and Maintenance (I, S, M & M) Techniques

The I,S,M & M techniques which are applicable to the CRD system, were evaluated to determine those that are most effective in detecting aging degradation in an incipient stage. Visual and instrument aided methods, including on-line techniques, are discussed with consideration for practicability.

A review of artificial or accelerated aging techniques is made and compared to data available on naturally aged hardware. Included here is an analytical technique which uses actual experience in a predictive model to determine optimum intervals for maintenance.

6.3.1 CRDM Data Analyzing System[14]

The Japanese developed a system which detects degradation in the CRDM through on-line analysis of current signals and noise that is generated during rod motion. As shown in Figure 6.1, the system analyzes five parameters for each CRDM: current data from three coils (lift coil, movable gripper coil, and stationary gripper coil); sound data, which can be monitored by an accelerometer mounted on the top of the CRDM pressure housing; and a logic signal generated from the rod drive timing circuit.

The movement of the magnetic pole pieces through the magnetic field produced by the energized coils induces a current which appears as a dip on the coil current plot (Figure 6.2). By analyzing the degree of dip on each current curve together with the sound data, information on drive rod, coil, and magnet performance is obtained. Input to preventive maintenance needs on the CRDM is achieved by this system. The system has on-line capability which permits continuous monitoring of the rods during normal power operation. Figure 6.3 is an example of the data obtained during rod motion.

Material received with the industry survey results indicates that this type of system is being used at some plants. A preventive maintenance procedure entitled "Operational and Timing Check of the Full Length Control Rod Drive Mechanisms" uses a high speed recorder, microphone, and appropriate signal conditioning equipment (Figure 6.4) to monitor traces during rod movement. The procedure is only performed when the reactor is shutdown and the results are forwarded to Westinghouse for review and evaluation. No acceptance criteria were provided in the procedure.

6.3.2 Statistical Techniques

Methodologies have been developed for predicting the frequency of maintenance or the replacement of components. These statistical approaches should not be overlooked when evaluating I,S, M&M techniques. In fact, the survey of industry practices discussed in Section 6.1 revealed that seven of the fifteen plants monitor CRD system failures to identify trends that indicate decreasing reliability.

Concept of CRDM Data Analyzing System

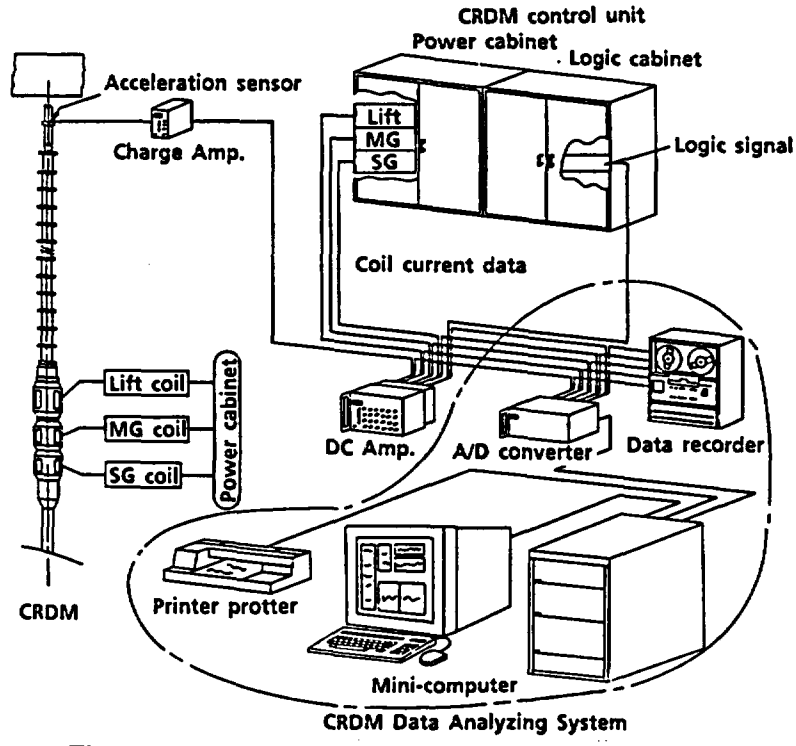

Figure 6.1 CRDM data analyzing system - conceptual

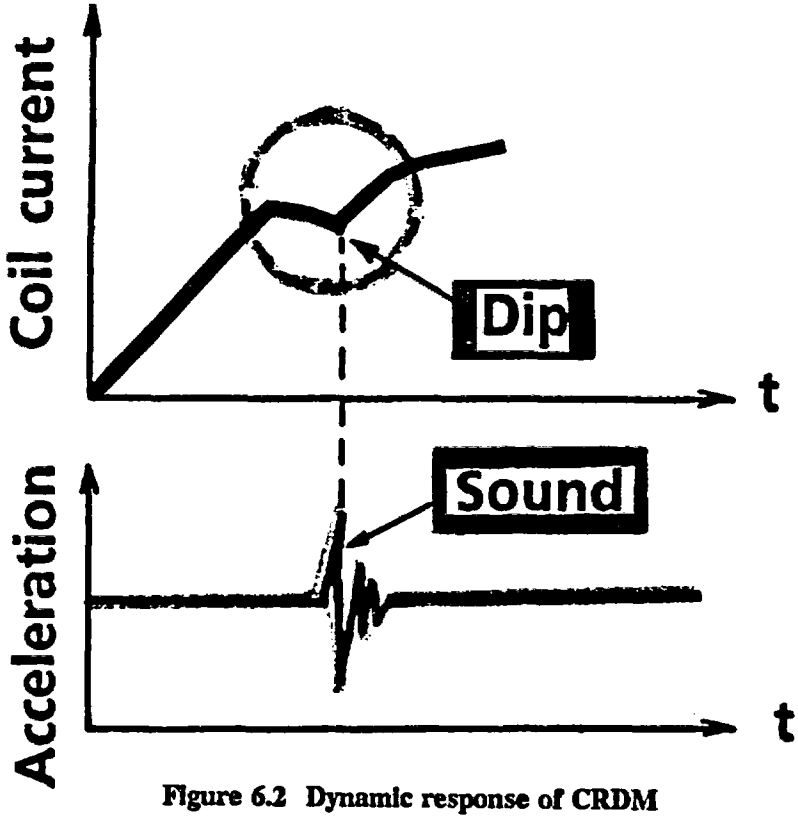

Figure 6.2 Dynamic response of CRDM

Example of CRDM Data Analyzing

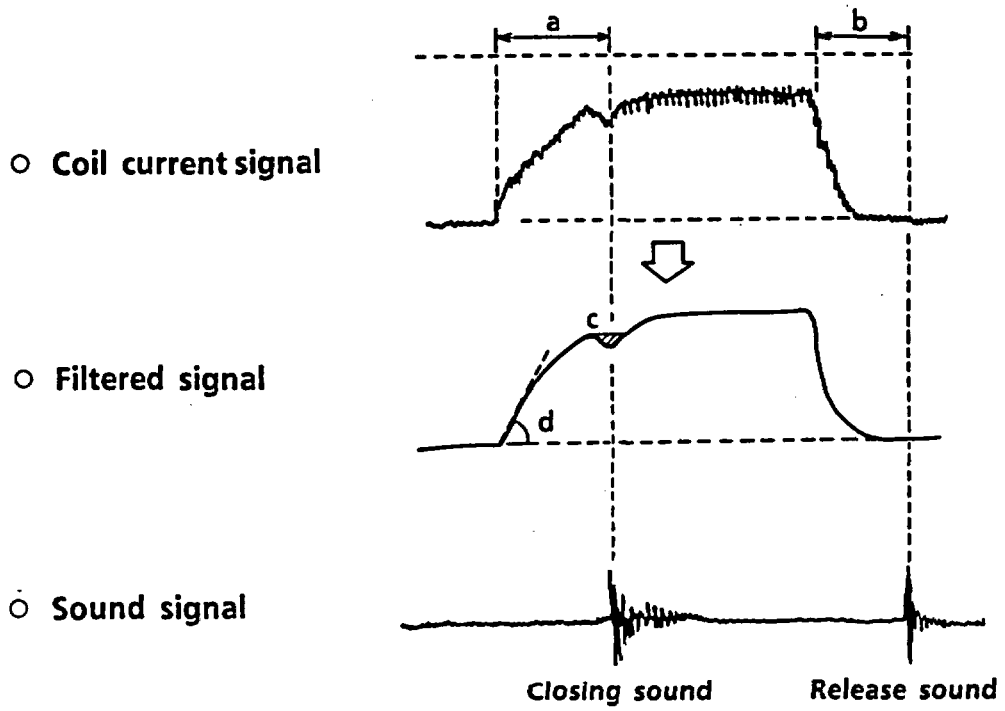

Figure 6.3 Example of data generated during CRDM motion

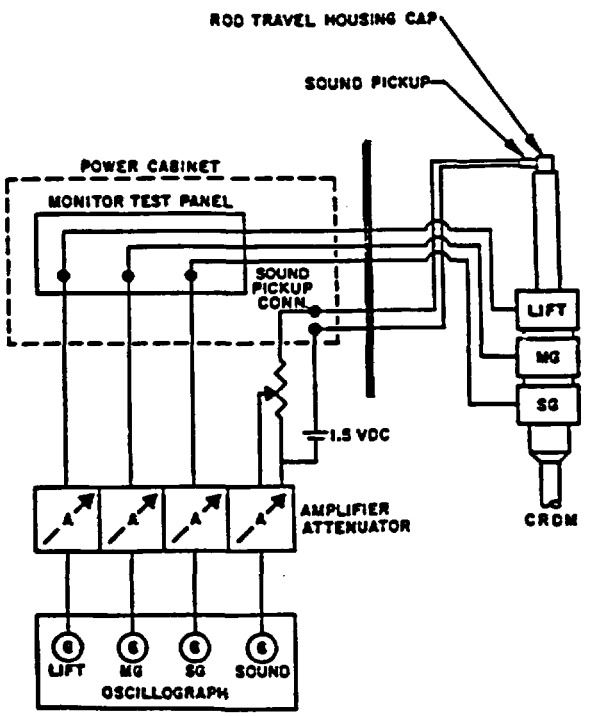

Figure 6.4 CRDM test setup

One of the methods reviewed has been directly applied to the Westinghouse CRD system[15]. This method uses data on operating experience to create a model for predicting the future performance of the CRD system at a specific plant. This predictive model, based on a Weibull distribution, requires the large data base which Westinghouse has to obtain accurate results. The Weibull distribution can be made to model a wide range of life distribution characteristics for different classes of items. For each failure of a subcomponent within the CRD system, the failure time and the number of survivors up to that time is computed. A number known as the hazard value is calculated for each failure (100 x 1/survivors). The cumulative hazard value is the sum of all previous hazard values up to that given time. These are plotted on a log-log scale as illustrated in Figure 6.5.

A least squares fit line drawn through the points yields two Weibull parameters, alpha and beta. Alpha is commonly known as the expected life of a component (62% probability of failure) and can be found at the intersection of the line with a cumulative hazard value of 100. Beta is the classic measure of wearout or aging and is the inverse of the slope of the fitted line. For this actual example of a Westinghouse CRDM subcomponent, alpha = 1.23 million hours and beta = 1.244 indicating that this particular subcomponent is expected to exhibit a slowly increasing failure rate with time. All of the subcomponent models are then summed to create an overall failure model for the CRDM. Recommendations are then possible for repair or replacement actions.

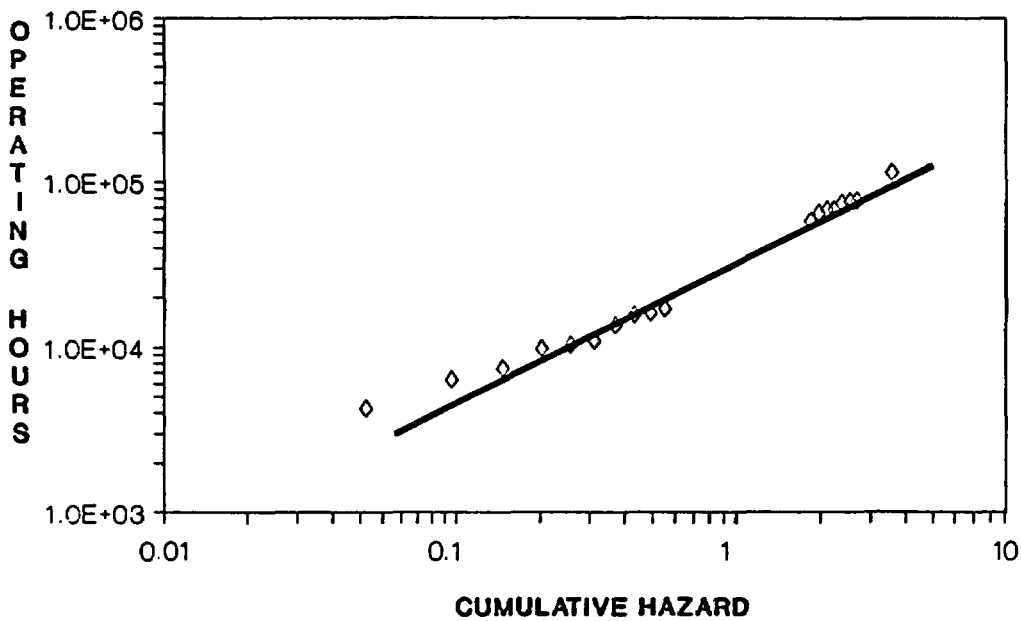

Figure 6.5 Plot of hazard values for CRD system subcomponent

6.3.3 Monitoring Control Rod Guide Tube Support Pin Degradation

The French have had repeated problems with control rod guide tube pins. These problems have been detected only after an actual failure has occurred. This problem is generally indicated by a 'loose parts monitoring system' alarm, or after the loose parts have caused damage to steam generator tubes. This same problem was also experienced to a lesser extent by the Japanese in the late 1970s, and in the United States in the early 1980s.

To minimize the risk of a pin rupture during power operation, the French are conducting inspections at each refueling cycle to detect the presence of cracking, and to evaluate the potential for the crack to lead to a rupture during the next operating cycle[16]. This is accomplished by visual (underwater TV camera) and ultrasonic techniques supported by accelerated aging test loops. The need to inspect every cycle is due in part, to the uncertainties associated with ultrasonic testing, although recent results from ultrasonic testing have compared favorably with conclusions derived from destructive testing.

The French have also established a test loop in which the pins are subjected to the representative temperature and flow conditions experienced in the Framatome PWRs. These pins have 10,000 more hours of simulated operation than any pin in the Framatome plants. By this simulation, the French expect to detect any developing problem due to aging in the test loop before it occurs in the operating plants. Since there is no radiation, laboratory metallurgical examination techniques can be easily employed.

At the Ringhals PWR plant in Sweden, a means of combining the ultrasonic and visual inspection needs for the guide pin was enhanced by development of a jig[17]. The inspection of the guide tube pin is performed with the upper internals positioned on a stand in the portion of the refueling level pool reserved for it. A manipulator arm, with ultrasonic probe and TV camera attachments, can be moved radially and axially so that each of the 106 pins can be closely inspected. As illustrated in Figure 6.6, the ultrasonic probe can be brought into direct contact with each pin and rotated. This should facilitate accurate and repeatable readings.

6.3.4 Life Cycle Testing-Monitoring Wear Rates

Programs aimed at reducing the cobalt inventory in a nuclear plant have identified the Westinghouse CRDM as one of the significant contributors due to the wear of its subcomponents[19]. As illustrated in Figure 6.7, the CRDM latch assemblies and the locking button at the base of the drive rod are the parts with a high cobalt content that are subject to wear.

The latch and link pins, as well as the latch arm and link, shown in Figure 6.8, are either hard faced with Stellite 6 or are made of Haynes 25. There are six sets of these parts for each CRDM. There is one locking button for each CRDM, which is made of Haynes 25.

Life tests have been conducted in which the wear of the high cobalt material was measured. These life tests represented 20 years of plant operation and indicated that the wear of the high cobalt material could range from 265 grams to 751 grams for 53 CRDMs. It should be noted that the life cycle testing assumed a high (conservative) number of steps over the 20 year cycle but does not include a loss of material due to corrosion.

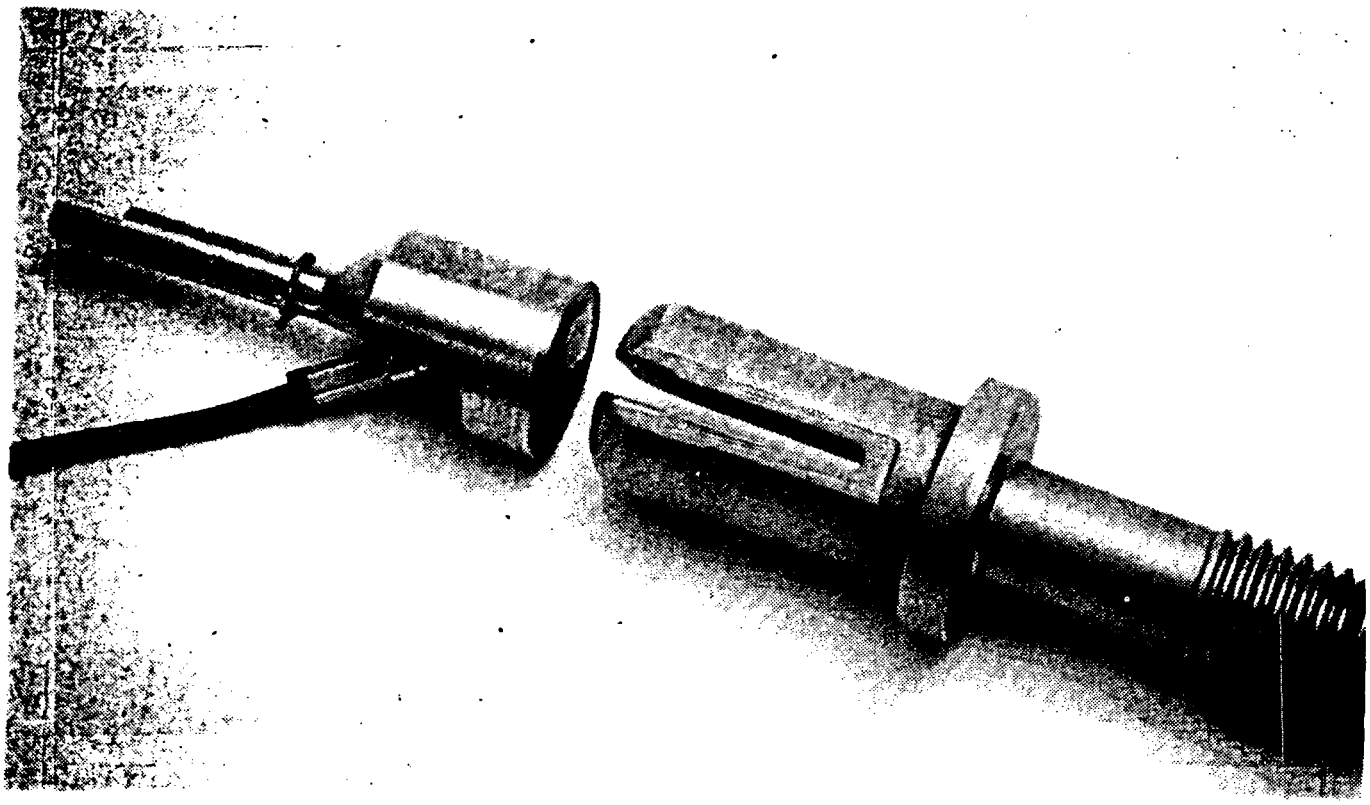

Figure 6.6 Guide tube support pin and ultrasonic probe[18]

6.3.5 Profilometry and Eddy Current Testing

Profilometry and eddy current testing are wear detection techniques which have been successfully employed in nuclear plants. Steam generator tubes, fuel rods, and rotating shafts are examples of these applications. These same techniques can also be used to monitor control rod drive mechanisms for wear and cracking.

Profilometers generally consist of two linear variable differential transducers (LVDT) placed 180° apart. They are then moved axially over the full length of the specimen. The inside of a steam generator tube or the outside of a fuel rod are two surfaces of interest where accurate data have been obtained. Sensing heads contact the surface and monitor changes in the surface or diameter. The responses are converted into an electrical signal which can be displayed on a strip chart recorder.

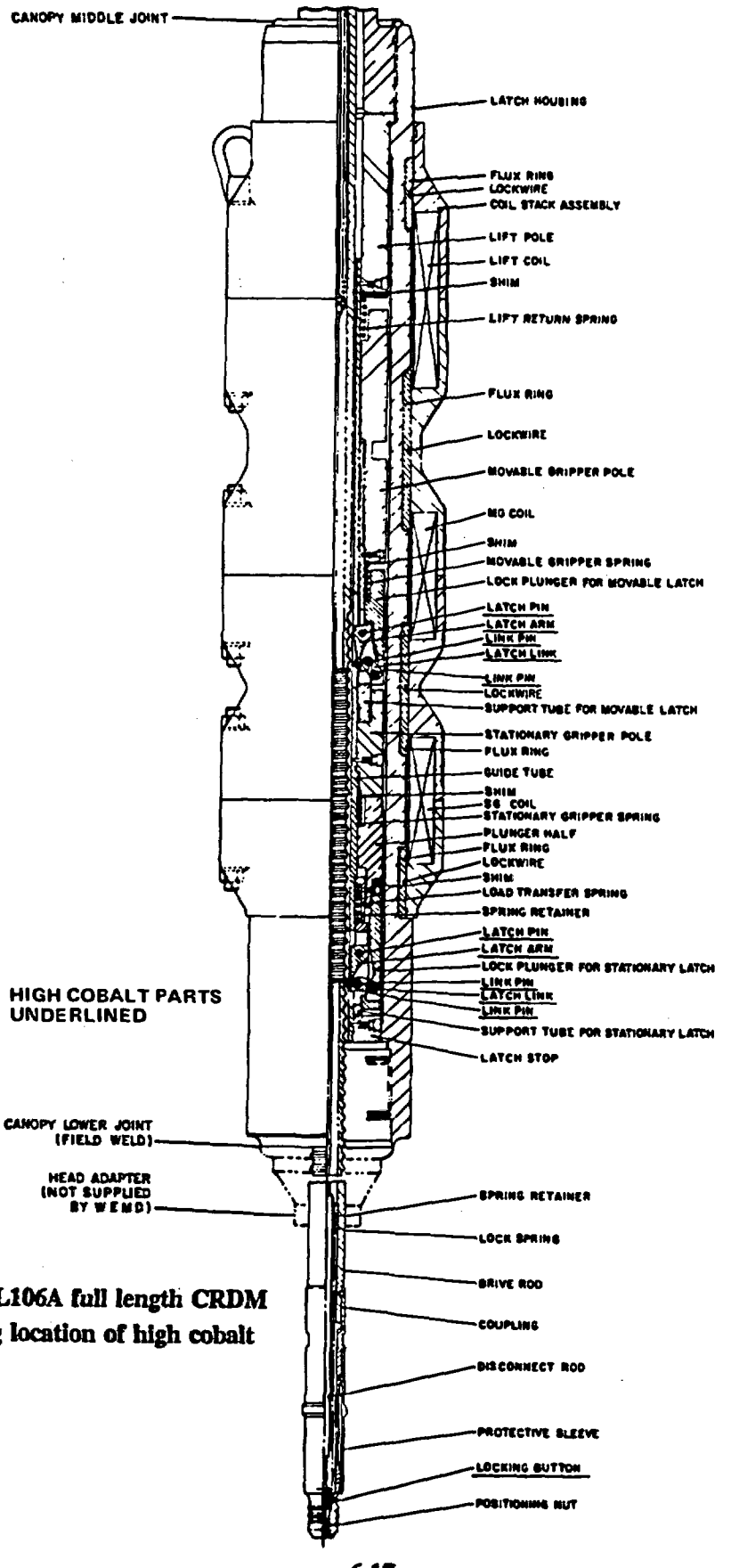

Figure 6.7 Model L106A full length CRDM showing location of high cobalt parts[19]

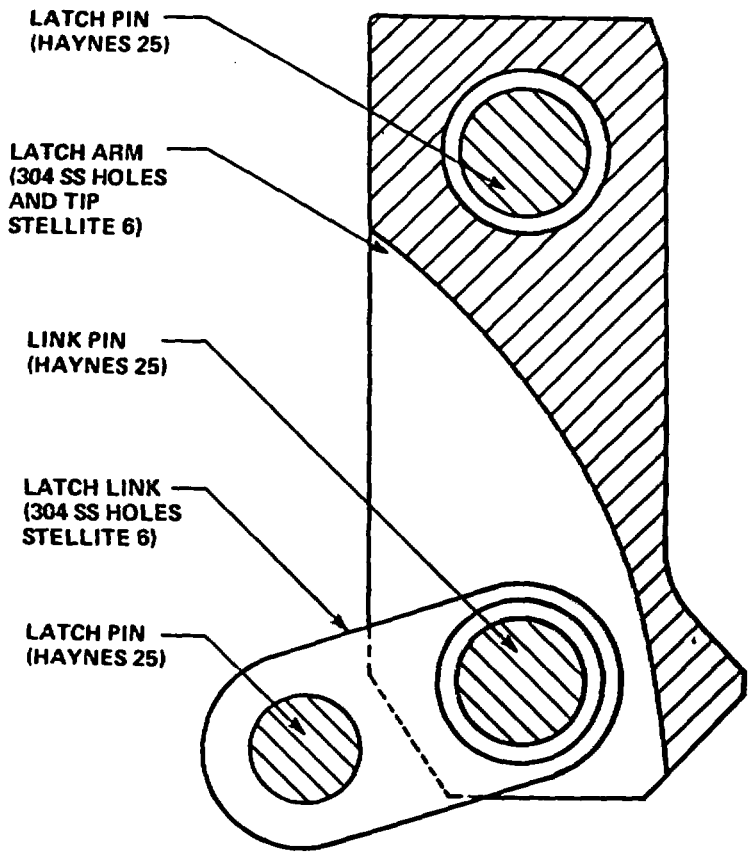

Figure 6.8 Details of high cobalt parts in latch assembly[19]

Some profilometry systems use a rotating sensor. As the probe head is rotated and moved along the axial length, a helical image of the tube geometry is obtained. A profilometry output using the rotating sensors is illustrated in Figure 6.9. A steam generator tube is the subject of examination, and is used to track dent growth. The profile can be used to calculate strains, and to assess the potential for tube leaks[20].

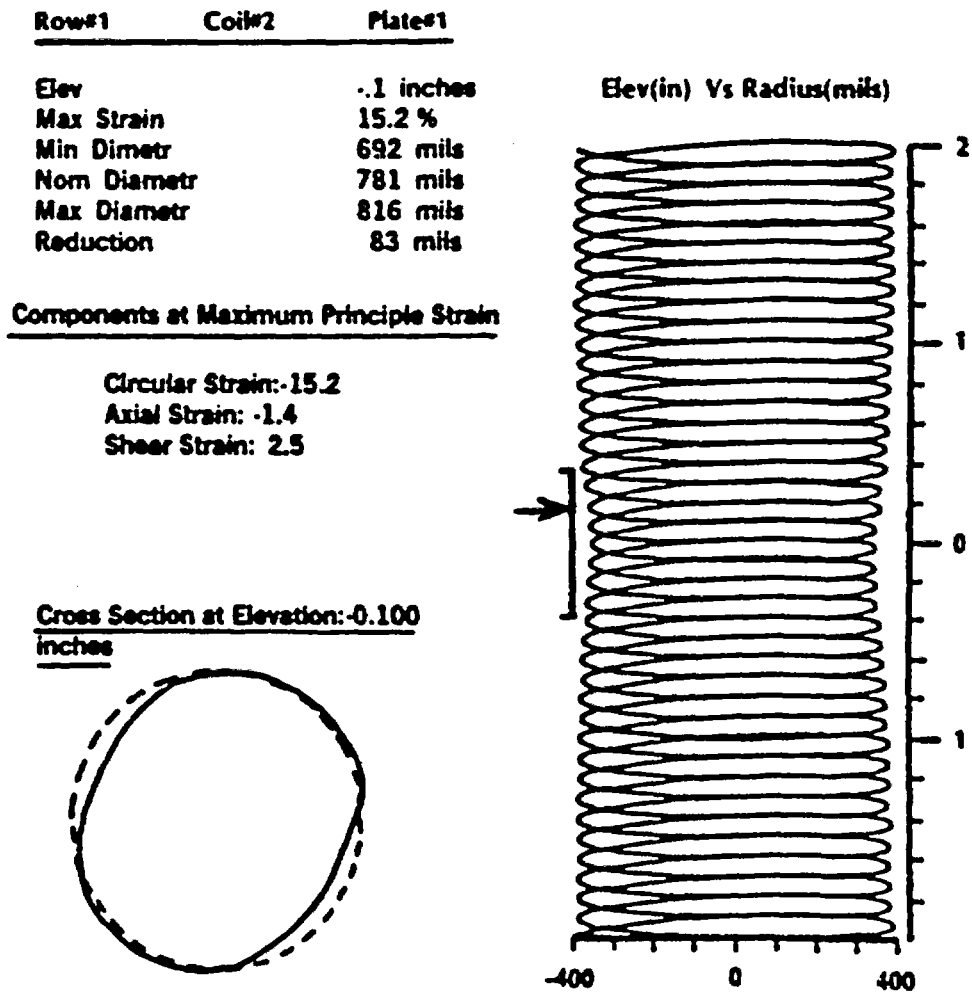

Figure 6.9 Profilometry for steam generator tube[20]

Figure 6.10 illustrates the use of profilometry for comparing the diameter of a fuel rod along its entire length, between the beginning of the operating cycle (BOL) and the end of its operating life (EOL). Its ability to accurately detect changes to the .001 of an inch, makes profilometry a viable technique for monitoring the thickness and wear of control rod guide tubes.

Eddy current testing can also be used to detect and locate incipient defects in the CRD system. This test involves the simultaneous excitation of a probe coil at two different frequencies (hundreds of KHz). The resultant flux induces current to flow within a confined volume, and the magnitude and phase of these currents are reflected in electrical voltages. In a nuclear fuels application, defects in the cladding (i.e., stress corrosion cracking) disrupt the flow of eddy currents. This disruption changes the flux near the test coil, which alters the output voltage. Similar changes of eddy current would occur due to defects in the control rod drive mechanism.

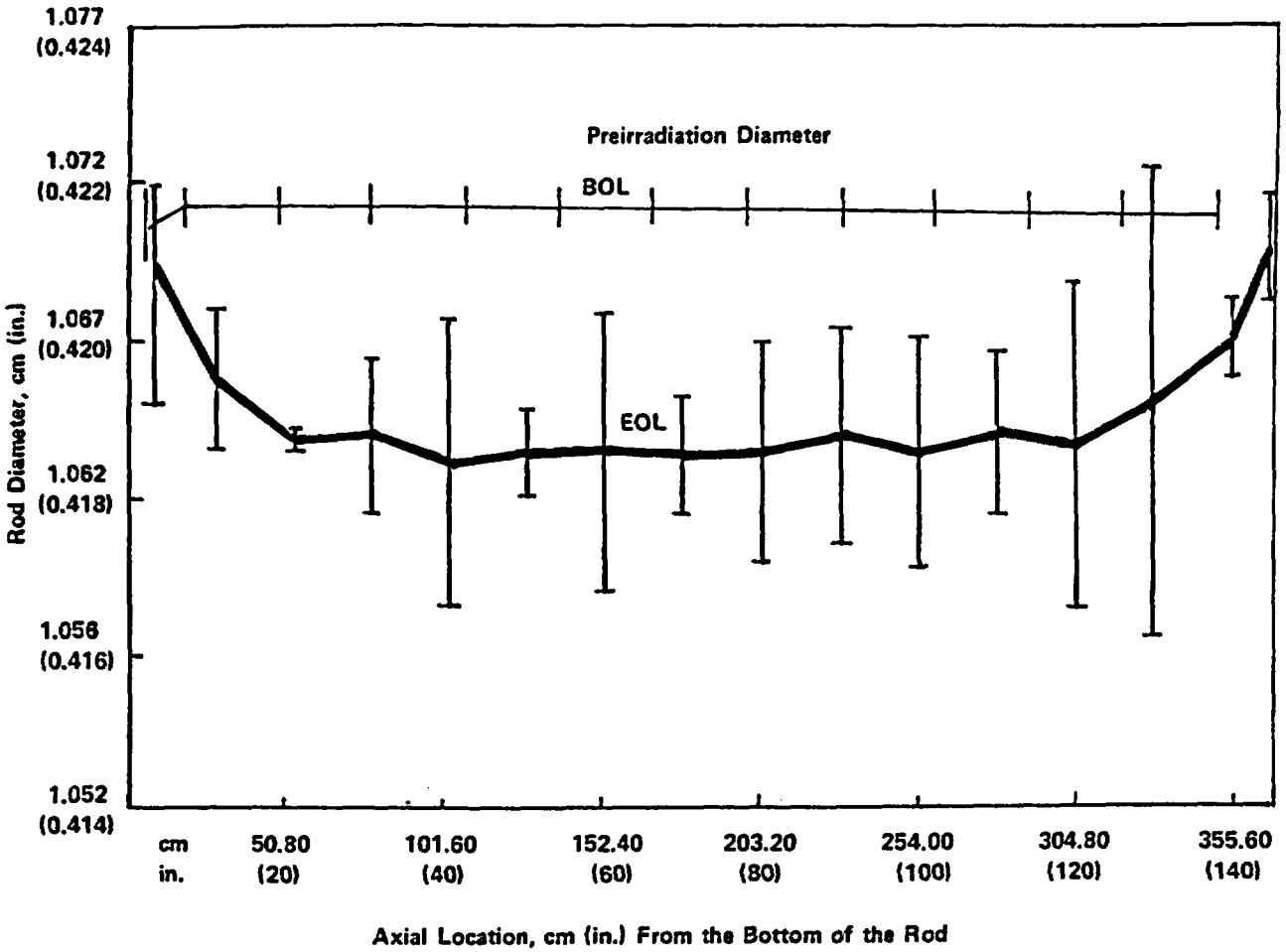

Figure 6.10 Fuel rod diameter profile[21]

6.3.6 Electronic Characterization and Diagnostics System (ECAD)

The ECAD system uses electronic instrumentation to characterize circuit continuity and insulation integrity. It can be used to detect degrading circuits by examining several common electrical parameters. It has the ability to acquire, store, analyze, and trend large quantities of data over several months[22].

In a control drive system application, ECAD has been used to measure coil resistance, insulation resistance, capacitance, and dissipation factor. The DC coil resistance measured at one plant using ECAD was consistently higher than 1.0 ohm. One coil's resistance was significantly lower than the others, indicating the potential for a short circuit in the coil windings. This lower resistance was also reflected in a lower coil inductance. The intent of the inductance in conjunction with the measurement of dc resistance is to identify the condition of the coil.

Moisture intrusion has been a common cause of cable and connector degradation. ECAD uses capacitance and dissipation factor to determine the presence of moisture. As moisture penetrates into a cable, the dissipation factor and capacitance increase.

7. DISCUSSION OF CRD SYSTEM RESEARCH AND NRC EXPERIENCE

The Westinghouse control rod drive system has been the subject of study by industry and the NRC. Those studies which provided insights related to the goals of the NPAR program were reviewed in depth and are summarized in this section. From the industry side, the research emphasis has been on reliability analysis and plant life extension. The NRC's research and experience have been associated with the interaction of the CRD mechanism with the fuel and analysis of a small number of CRD system operating events. All of this information was evaluated as part of this aging study.

7.1 NRC Research and Experience

In the last decade, several reports, bulletins and information notices have been issued by the NRC related to the Westinghouse control rod drive system. These documents vary in complexity from a very detailed evaluation of control rod guide tube wear (NUREG-0641) to a cursory discussion of the problems of the control rod drive mechanism as covered in the NRC's annual fuel performance report (NUREG/CR-3950). Also reviewed were the information notices and bulletins pertaining to various subcomponents of the CRD system, as well as a case study report by the Office for Analysis and Evaluation of Operational Data (AEOD) of localized wear on rod cluster control assemblies (AEOD/E613). Portions of these documents which are pertinent to this study, are summarized here.

NUREG-0641, "Control Rod Guide Tube Wear in Operating Reactors"[4]

Published in June 1980, this report describes evidence on the wear of control rod guide-tubes, which has been observed in operating PWRs, and describes measures being taken by Westinghouse, the utilities, and the NRC to deal with this generic problem.

As described in Section 2 of this report, the control rod guide tube assembly is part of the upper core structure and provides the housing and guide path for the control rods. The guide tube thimbles are an integral part of the fuel assembly and interact directly with the RCCA. According to the NRC staff, the structural integrity of the guide tubes is required under both normal and accident conditions in order to:

1. maintain a coolable core geometry, and
2. permit control rods to scram, as required by the safety analyses.

This report describes the results of several Westinghouse inspections in which the wear of control rod guide-tubes was noted. The first inspection which was conducted in a hot cell, examined specimens from two assemblies. Westinghouse also performed inspections and eddy current testing on the wear of guide tubes at two operating facilities. Their results are summarized as follows:

1. the wear is localized at the axial elevation corresponding to the fully withdrawn position of the RCCA,
2. the wear depth is time-dependent,
3. the core location (radial position) had no effect on the amount of wear, and
4. no through-wall wear is projected for the guide tubes for 250 weeks of continuous operation under a parked RCCA.

The NRC agreed with the wear model developed by Westinghouse in that the major variable was believed to be control rod vibration. However, the NRC did not feel the results were directly applicable to 15 x 15 and 17 x 17 fuel designs and recommended further inspections and analysis. This concern for wear was limited to the Westinghouse fuel design which uses zircaloy control rod guide tubes. The stainless steel control rod guides used in a second fuel assembly design have an inherently harder wear surface that is not susceptible to significant wear.

After the publication of this report, the NRC's Reactor Safety Branch recommended approval of the analysis for Westinghouse 15 x 15 fuel designs. They did recommend some limitations on the 17 x 17 fuel designs; primarily associated with limiting times on the first operating cycle.

AEOD Engineering Evaluation Report - E613[23]

In December 1986, the Office for Analysis and Evaluation of Operational Data (AEOD) published an engineering evaluation report, which described localized wear of the rod cluster control assembly (RCCA). This study was initiated because of the discovery of wear-related degradation at two Westinghouse plants, Point Beach Unit 2 and Kewaunee. Three types of degradation were noted:

1. wear due to rod motion,
2. wear due to flow-induced vibration, and
3. intergranular stress corrosion cracking of the rodlets.

As illustrated in Figure 7-1, and described further in Section 2, the RCCA consists of a hub and spider arrangement with the neutron absorber contained in stainless steel tubes, which fit in the control rod guide tubes within the fuel assembly. During normal control rod stepping or reactor scrams, wear of the RCCA can occur due to its sliding interface with the guide plates. When the RCCA is fully withdrawn, wear can occur due to the flow-induced vibration. The third type of degradation described in the AEOD study was discovered at Point Beach where a 2-inch longitudinal crack was found on one rodlet. This was initially determined to be a localized tubing defect. Subsequent to the AEOD report, it was determined that the crack was, in fact, "axial hairline tip cracking due to the interaction between the absorber and the cladding, and radiation induced effects in the tip region of the rodlet"[33].

This AEOD report concluded that wear and degradation of the RCCA occurs due to normal operating stresses, and that the damage mechanism appears to be long term. This wear is a safety concern because it could cause the loss of absorber material from the rodlet, or binding of the control rod. Information Notice 87-19 was issued to alert all Westinghouse licensees of the problems experienced, and the need to schedule inspections to detect the extent of degradation.

Two supplemental issues were raised as a result of this study. The first was whether a tech spec change was required to accommodate a modification to the fully withdrawn control rod position. (Westinghouse recommended that localized wear could be minimized by periodically changing the fully withdrawn position, especially for the shutdown rods.) The second issue was that neither of the two incidents had been reported via the LER or NPRDS databases; similar wear degradation may have occurred at other sites.

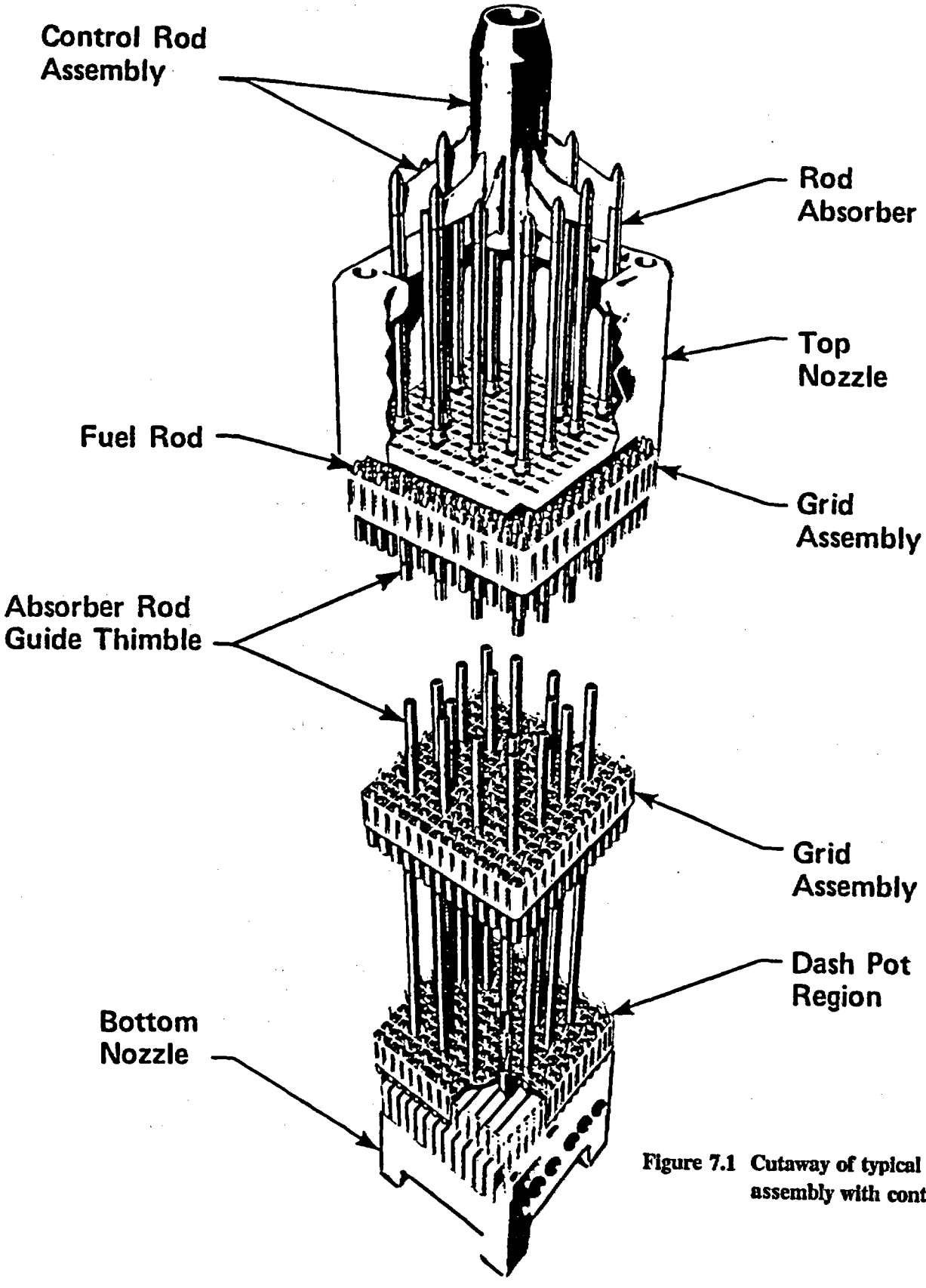

Figure 7.1 Cutaway of typical fuel assembly with control rod[3]

NUREG/CR-3950, Fuel Performance Annual Report, Vols. 1-6[24]

The NRC has issued an annual report since 1978 summarizing the performance of nuclear fuel in commercial light water reactors. While the report emphasizes fuel, other topics relevant to control rod drives are discussed as summarized below:

1. Control Rod Guide Tube Support Pins: The 1987 annual report states that while broken control guide tube support pins continue to be found, the number of such events should decrease in the future because of the corrective actions that have been implemented. The report identifies the Westinghouse PWRs which have had support pin failures, including the following:

   - the first pin failures in a domestic plant occurred at North Anna 1 in 1982,
   - the largest number of pin failures to date have occurred at Point Beach 1,
   - at Prairie Island-1 a complete changeout of reactor internals was made rather than just repairing the pins, and
   - the 102 guide tube split pins at Turkey Point-4 were replaced.

The report points out that the replacement split pins installed on Electricite de France's (EDF's) older PWRs have begun to crack. In 1988 a split pin broke loose at Gravelines-1, and ultrasonic inspection revealed that the pins contained stress corrosion cracks. All 122 split pins were replaced; however, the French reported in June 1988 that fresh cracks were discovered. The on-going problems that the French have had with control rod guide tube split pins are discussed further in Section 4 of this report.

Events related to Westinghouse control rod drive system cited by NUREG/CR-3950 are summarized in Table 7.1.

NUREG/CR-4731, "Residual Life Assessment of Major Light Water Reactor Components,"[25]

In a study performed by Idaho National Laboratory (INEL) for the NPAR Program, some observations and recommendations were made regarding the aging of PWR control rod drive mechanisms. This research included an overview of the age-related degradation mechanisms with the potential for affecting the life extension of PWR CRDMs and reactor internals.

The major sources of age-related degradation for CRDMs as cited by this study are thermal transients, such as plant heatups and cooldowns, latchings and unlatchings, and the high temperature corrosive environment. The two CRDM failure modes, which are a major safety concern, are pressure boundary leakage and failure to insert control rods.

The study concludes that "many of the factors relating to lifetime predictions of CRDMs are unknown." It recommends that several activities be conducted on CRDM aging related issues, including:

Table 7.1 Control rod drive events from NUREG/CR-395011[24] - EVENT CAUSE

Year	Plant	CRDM Cooling	Debris in CRDM	MG Set Failure	Rod Drop Cause Unknown	Control Boards	Misalign-ment	Loose or Broken Set Screws	Power Cabinet Failure	Seal Weld Failure
1988	Diablo Canyon 1									X
1988	Turkey Point 3						X[4]			
1987	Turkey Point 4	X[1]								
1986	McGuire 2		X							
	Farley 2			X						
	Beaver Valley 1				X					
	Callaway 1					X[2]				
	Indian Point 2						X[3]			
1985	McGuire 2							X		
1984	Catawba 1							X		
	Point Beach 2							X		
	Surry 1							X		
1983	Turkey Point 3								X	

[1] Boric acid crystals caused corrosion of CRDM for ductwork
[2] Two events attributed to elevated ambient temperature.
[3] One rod was inoperable due to misalignment.
[4] Pin on connector for moveable gripper coil pushed out of engagement.

- A program to determine the integrity of the CRDM seal welds which are not readily accessible.

- Periodic electrical diagnostic tests to determine changes in electrical parameters that indicate the degree of wear or binding in CRDMs.

- CRDMs be periodically pulled to measure the wear. Consideration should be given to rotating them to other core locations.

Information Notice 89-31, "Swelling and Cracking of Hafnium Control Rods"

This notice describes abnormal wear and swelling, which were identified in Hafnium RCCAs at the Wolf Creek and Callaway Plants. Some foreign experience with this phenomenon is also noted.

The principal safety concern associated with this effect is the inability of a control rod to fully insert into the core because of interference between control rods and guide tubes. The NRC stated that it is concerned about the long-term continued operation of nuclear reactors with swollen or cracked Hafnium control rods. They emphasize the importance of detecting this degradation early so that corrective action may be completed to preclude any deterioration of the safety function of the control rods.

Information Notice 87-19, "Perforation and Cracking of Rod Cluster Control Assemblies"

This notice describes events at Point Beach, Kewaunee, and Haddam Neck where fretting wear and cracks occurred in the RCCA. While Westinghouse had conservatively estimated that this type of wear would not cause excessive thinning for at least 15 years of operation, the three reactors where problems were discovered had been operating for less than 13 years.

The safety concern addressed by the NRC in this case is that a breach of the RCCA tubing could release activation products into the reactor coolant. This release could reduce shutdown margin due to the decrease in control rod worth.

This notice refers to the AEOD study E613 related to the fretting wear resulting from the flow induced vibration between the rods and guide supports during several months of steady state operation. According to Westinghouse, this fretting wear encompassed one-third of the circumference of the rod, and the depth varied with the amount of time RCCAs were in the withdrawn position.

Information Notice 87-05, "Miswiring in a Westinghouse Rod Control System"

An error in the wiring of circuit cards in the Westinghouse-supplied rod control system at Beaver Valley Unit 1 was the subject of this notice. This miswiring resulted in movement of an incorrect bank of rods, thereby violating the tech spec rod insertion limits. This limit ensures that the reactor will be placed in hot shutdown following a reactor trip. This problem was determined to exist since initial installation and was plant-specific. Drawings provided by Westinghouse were found to be correct.

Information Notice 86-103, "Degradation of Reactor Coolant System Pressure Boundary from Boric Acid Corrosion"

While this notice addressed itself to problems which had occurred at plants designed by Combustion Engineering (C-E), the concerns expressed are also valid for Westinghouse PWRs. In fact, a supplement to IN 86-108 issued in April 1987, described leakage of boric acid which plugged the cooling ducts for the CRDMs at a Westinghouse PWR. Corrosion of connectors was also noted.

Information Notice 85-86, "Lightning Strikes at Nuclear Power Generating Stations"

This notice describes several incidents of electrical surges caused by lightning which caused failures in the rod drive control system. The loss of power to multiple rods caused them to drop and led to reactor scrams.

At Zion units 1 and 2, the electrical transient from a nearby lightning strike blew fuses in the rod drive power cabinet disabling several dc power supplies. Subsequent testing verified that noise induced on the ac input to one power supply would trip the main and auxiliary power supplies.

At Byron Unit 1, induced voltage from a lightning strike caused the failure of four rod drive power supplies. Ten control rods dropped into the core resulting in a reactor scram.

In the above cases, as well as several other examples provided in the notice, modifications to the lightning protection system were made to preclude reoccurence.

Information Notice 85-14, "Failure of a Heavy Control Rod (B_4C) Drive Assembly to Insert on a Trip Signal"

A drive rod at a Westinghouse plant overseas became stuck due to a disengaged breech guide screw. Subsequent testing at similar U.S. plants revealed multiple examples of inadequate applied torque. The potential for a similar event was evident if the condition was permitted to remain. Westinghouse, therefore, developed a procedure for inspection and repair to stop the screw from coming loose.

Information Notice 82-29, "Control Rod Drive (CRD) Guide Tube Support Pin Failures at Westinghouse PWRs"

This notice discusses several control rod drive guide tube support pin failures which occurred between 1978 and 1982. While the safety consequence of a single pin failure was found to be limited, multiple pin failures could affect redundant safety systems. Considering the potential common-mode failure mechanism of stress corrosion cracking, the NRC expressed concern that several pins could fail. This was considered to be a safety concern due to the existence of loose parts rather than possible misalignment of the CRDM.

Westinghouse analyzed the failed pins and revised the heat treatment technique. Westinghouse now recommends that the pins be solution heat treated at 2000°F for 1 hour and age hardened at 1300°F for 20 hours to minimize the stress corrosion cracking problem. A reduction of the torque on the lock nut to 130 ft. lbs. was also specified. It should be noted that Westinghouse has revised its recommendation for heat treatment and that the torque values vary among plants due to the variations in applied operational loads[33].

NRC Standard Review Plan[26]

Four sections of the standard review plan (SRP) address the control rod drive system as described in this aging study. They cover the structural and material aspects of the CRDM and guide tubes, as well as the function and operation of the system. Both normal and adverse operating conditions are addressed as described below.

Section 3.9.4 Control Rod Drive Systems

For electromagnetic systems, such as the Westinghouse design, the review under this SRP section is limited to the mechanism portion of the system. The Mechanical Engineering Branch (MEB) of the NRC reviews the non-pressurized portions of the system to "determine the acceptability of design margins for allowable values of stress, deformation, and fatigue used in the analyses."[26] The loadings identified in the SRP, which are imposed during normal plant operation, include pressure and temperature effects. These are added to loadings associated with other dynamic events, including seismic. The resulting response must be within certain stress or deformation limits to assure operation of the system during and after the event.

Operability assurance is addressed in the SRP through review of the life cycle test program and mechanism functional tests. The SRP directs that the life cycle test program determine the ability of the drive mechanisms to function over the full range of temperatures, pressures, loadings and misalignments expected in service. These programs should include functional tests to determine rod insertion and withdrawal times, latching operations, and scram times. The testing should also demonstrate the ability to overcome a stuck rod and wear.

Excessive wear, malfunction of components, and operating times beyond determined limits would be cause for re-testing.

Section 3.9.5 Reactor Pressure Vessel Internals

This review plan addresses the structural and mechanical elements inside the reactor vessel including the CRDM guide tubes. Of particular interest is its reference to Section 3.9.2 regarding flow-induced vibration testing. Based on the unexpected wear of the CRD system, which has occurred due to this phenomenon, it is conceivable that the original tests and analyses were not as conservative as assumed. Of a more generic nature, this review plan requires that the design of the CRD guide tube must withstand the most adverse loading postulated "without loss of structural integrity or impairment of function."

Section 4.5.1 Control Rod Drive Structural Materials

This segment of the SRP is directed towards the CRDM up to the coupling interface with the control rod, and does not include the electrical system for actuating the CRDM. General Design Criteria (GDC) 26 is referenced as it relates to the control rods reliably controlling reactivity changes so that fuel design limits are not exceeded.

Specific guidance is provided to the reviewer concerning the material specifications that should be evaluated, including heat treatment and requirements for ferrite content. Of interest here are the specific concerns regarding stress corrosion cracking, which has occurred in several subcomponents of the CRD system. The SRP further directs that all materials selected for application in the CRDM conform with the applicable code case in Regulatory Guide 1.85, "Materials Code Case Acceptability, ASME Section III Division 1.

Section 4.6 Functional Design of Control Rod Drive System

This section of the SRP addresses the following:

- control rod drive cooling systems,
- supporting instrumentation to verify CRD system operability,
- the ability to meet the single failure criteria, i.e., demonstration of the ability of the control rods to insert upon any failure of the drive mechanism or induced failure (loss of power, fire, radiation),
- the ability to control reactivity changes, and
- the ability to withstand postulated reactivity accidents including rod ejection, rod drop, and cold water addition.

Table 7.2 Standard review plan summary for CRD

Section	Responsibility	Primary Requirements	Aging Aspects Addressed
3.9.4	CRDM mechanical	Life cycle test program	Wear, functional test stressors
3.9.5	Guide Tube	Mechanical strength- ability to withstand postulated loadings	Flow induced vibration
4.5.1	CRDM Materials	ASME Code class, material composition, heat treatment	Stress corrosion cracking
4.6	CRD Support Subsystems	Meet single failure criteria	Design/operability concerns

7.2 Industry Research

Several industry research reports were reviewed as part of this aging study. Perhaps the largest area of on-going research for the control rod drive system is for plant life extension (PLEX). Work sponsored by EPRI and DOE at the Surry Plant resulted in several recommendations for monitoring and maintenance, which are further evaluated in this report. This section summarizes these results from EPRI, as well as other industry sources, including Westinghouse.

EPRI NP-6232-M, "PWR Pilot Plant Life Extension Study at Surry Unit 1 - Phase 2"[27]

This report identifies the data acquisition tasks that were implemented to collect data on the operating environment for the control rod drive mechanisms and cables inside containment.

Three issues identified which require further characterization to alleviate life extension concerns are:

1. Thermal embrittlement of the CRD housing. Cast stainless steel with a ferrite content of approximately 20% is vulnerable to thermal embrittlement. Some of the housings at Surry possess a ferrite content ranging from 13% to 21%. Accurate measurement of the temperature of the CRDM housing has been recommended to better assess this degradation mechanism.

2. Thermal fatigue of CRDM subcomponents. An evaluation of the CRDM pressure vessel housing indicated that fatigue is not a concern based on the assumed thermal gradients and transients. The report does recommend, however, that actual temperatures of the CRDM should be recorded to "verify conservatism in the fatigue waiver calculations and thereby support life extension for the fatigue-sensitive CRDM subcomponents."

3. The report identifies the CRDM coils as being susceptible to aging degradation mechanisms. Specifically, it calls out exposure of insulation to high temperatures, which could lead to shorting of the coil. Monitoring of the coil temperature is recommended to provide data for determining the life expectancy of coils.

EPRI NP-4512, "Lifetime of PWR Silver-Indium-Cadmium Control Rods"[10]

This report describes the results of examinations of control rods taken from the Point Beach Unit 1 reactor. These examinations, conducted in hot cell facilities, focused on the inspection of rods that had been used for 11 reactor cycles. Based on the cladding wear and cracking detected, an estimate of 10 calendar years is made for the service life of control rods, as compared to a 15-year service life traditionally estimated by manufacturers.

The hot cell investigations show that flow-related vibration of the control rod causes fretting wear, as a result of interaction with the guide structure of the upper core. The maximum wear limit of 15.0 mils has been established based on a minimum wall thickness of 18 mils. This means that a wall thickness of 3 mils is adequate to prevent the absorber material from adversely contaminating the coolant. For a typical plant, it is expected that this limit will be achieved on one or more RCCAs after approximately 74,000 hours (8.5 years) of reactor critical operation.

Cracks similar to those investigated in this research occurred in rodlets at other Westinghouse reactors. These axial, hairline cracks have been caused by cladding stresses, radiation damage of the cladding, and waterside environmental effects.

Electron microscopy of the cladding specimens identified silicon-rich impurities at the grain boundaries. Impurities such as silicon are embrittling agents in stainless steel and promote stress corrosion cracking in the presence of corrodents and at low levels of stress.

This report concludes that these hairline cracks do not necessarily require the plant to be shut down. It recommends that additional data be obtained to define the bounds of acceptable operation with hairline cracks and to determine the susceptibility of other RCCA designs to cracking.

EPRI NP-4312-SR, "LWR Core Materials Program: Progress in 1983-1984"[28]

EPRI initiated the LWR research program for core materials in mid-1974. The program originated with emphasis on fuel problems. Since 1979, however, increased attention has been directed to other core components including control rods. In fact, one of the six areas of emphasis cited is extending control rod life.

The report states that for PWRs, the lifetime of control rods is based on considerations related to the mechanical integrity of the stainless steel cladding. "The limiting factors are cracking of the cladding due to radiation damage and absorber swelling and wear due to interaction with upper core internals." Models to predict the fluence necessary to cause failure are under development.

The report notes that the cause of cracking in the high fluence part of the control rods appears to be related to irradiation-assisted stress corrosion cracking (IASCC). Work is progressing to resolve this issue because it also has implications for assessing the lifetime of other components. The report does state that Type 304 stainless steel, while resistant to intergranular stress corrosion cracking (IGSCC) in high purity water, has been known to crack when loaded in tension. This may be due to the presence of oxygen produced from radiolysis and impurities. In general, it is felt that the radiation increases the range of conditions for which IGSCC will occur. The extent and severity of IASCC has not been determined.

EPRI NP-2681, "Evaluation of Cobalt Sources in Westinghouse Designed Three and Four Loop Plants"[19]

In this study, which was conducted by Westinghouse, CRDM wear was evaluated because of its cobalt contribution to coolant activity levels. Corrosion and wear release rates were determined based upon the expected cycling of rods in a typical Westinghouse plant. The locations of the high cobalt parts are the latch assembly and locking button, which are illustrated in Figure 7.2.

The report describes several "life tests" of CRDMs in which the wear on the high cobalt parts have been measured. In two different tests, wear of the high cobalt material could have ranged from 265 grams to 751 grams for 3×10^6 steps for 53 CRDMs. This translates into 3 to 8.52 grams of cobalt per CRDM. Other information of interest cited in this report are the costs associated with replacing a CRDM latch assembly.

Removal:	3 man-days
Installation:	8 man-days
Change-out cost:	40K (1982 dollars)
Man-rem per CRDM:	5

EPRI NP-3912-SR, Vol. 2, "Proceedings: International Topical Meeting on Probabilistic Safety Methods and Applications"[29]

A paper presented at the above conference covered the failure analysis of steel pins in the control rod assemblies at French nuclear plants. The purpose of the study was to define a probabilistic approach to determine the risk of rupture of a pin as a function of operating time.

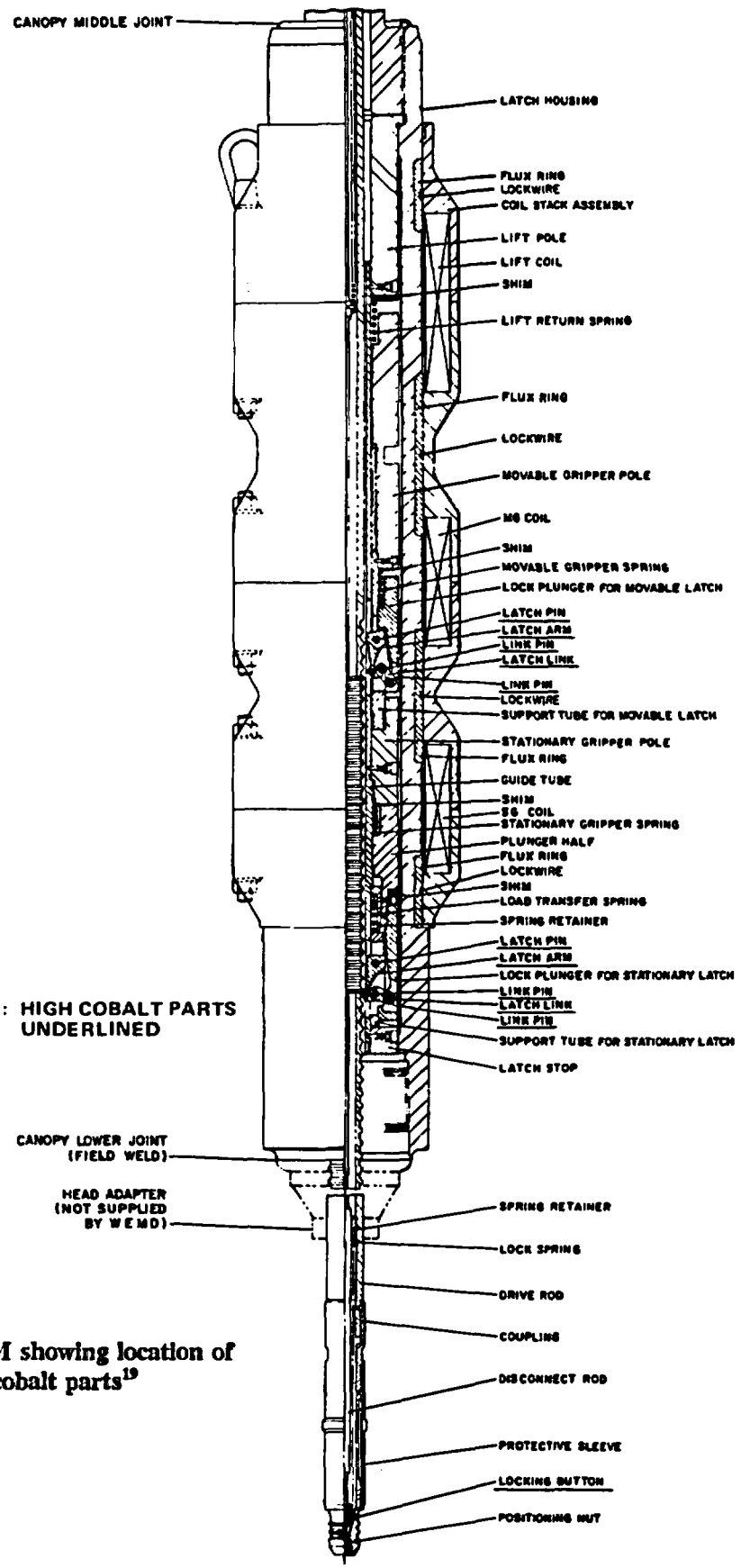

Figure 7.2 CRDM showing location of high cobalt parts[19]

The paper presents a derivation of the statistical laws which describe the pin characteristics. Certain features were incorporated into the model including the beginning of corrosion, "aging speed," and the time between the appearance of the crack and the rupture. The second part of the study used a test loop to validate the model. This portion of the research is continuing, and is directed towards determining the length of time between the appearance of a crack and the rupture of the pin.

Conference Paper, "Recent Development for Improving PWR Flexibility to Load Follow and Frequency Control Operation"[30]

The author described the French research on the additional stresses that would be placed on the control rod system if the utilities were to employ automatic load following. Load following requires that the power level of the plant respond to demands for electrical load as directed by a central dispatcher. This change in operations would generate additional mechanical and thermal stresses due to the frequent motion of the control rods. Mechanical fatigue cycling and wear were the specific degradation and thermal mechanisms noted.

Test loops were used to simulate various stresses that would be imposed by this operating condition, namely wear on the sliding surface of the CRDM, as well as wear and fatigue at the interface of grippers with the grooves of the drive shaft. Wear on the cladding of the control rods due to friction with the guide tubes and fuel assemblies was also monitored. The results obtained from this endurance testing (~10^6 cycles) of interest to this aging study are:

1. Complete breakthrough of the rodlet cladding (47mm thickness) occurred after 3 x 10^6 steps.

2. Failure of several single tip grippers occurred at 6 x 10^6 cycles, resulting in a loss of function of the mechanism. (1mm of wear)

3. Wear resistance and fatigue resistance were improved by two modifications (illustrated in Figure 7.3):

   a. For the CRDM, the single tip gripper was replaced by a double tip gripper.

   b. For guide tubes, hydraulic flow holes were added to reduce the differential pressure at the lower part of the guide tube.

4. The cycle testing was equivalent to approximately 20 years of continuous operation under daily load follow mode.

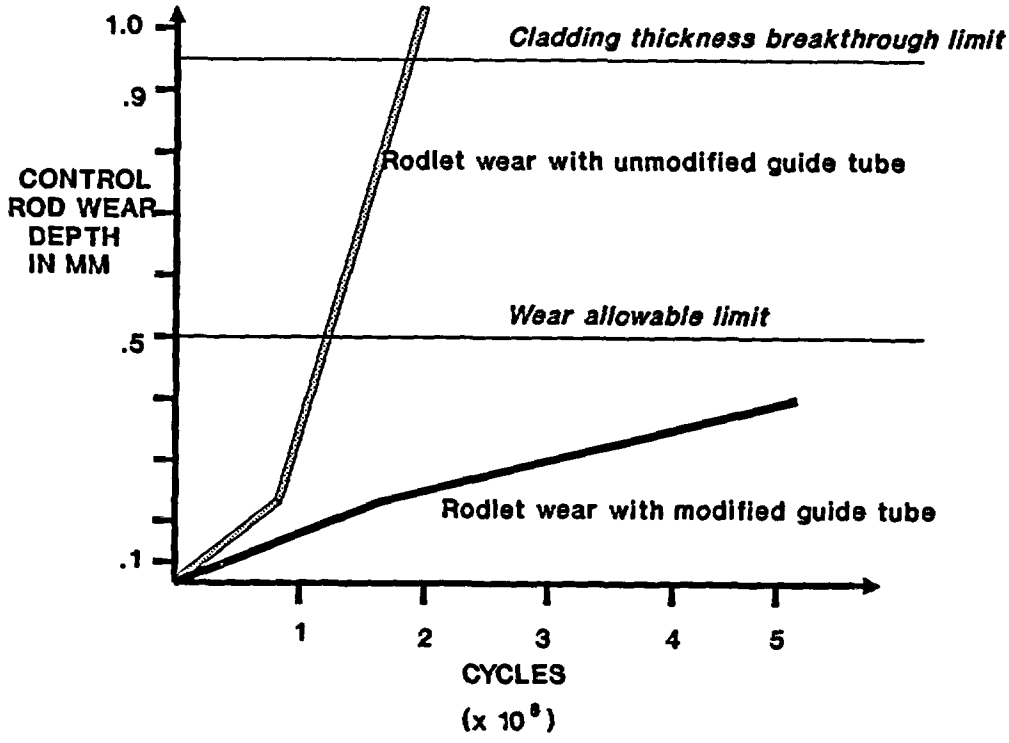

Figure 7.3 Control rod wear[30]

8. CONCLUSIONS AND RECOMMENDATIONS

The control rod drive system used in Westinghouse pressurized water reactors performs functions which are important to plant safety and availability. These are to: (1) shut down the reactor in the event of an unsafe condition, as sensed by the reactor protection system; (2) provide small changes in reactivity in response to plant load variations; and (3) continuously indicate control rod positions. Operating experience data indicates that failures of the CRD system have resulted from age-related degradation, that age-related degradation could prevent the system from performing its safety function; and that CRD system failures have resulted in reactor trips.

To identify and characterize the effects of aging and service wear, which could degrade the control rod drive system, a study has been completed of the design functions of the major system components, and the operating and environmental stresses to which they are exposed. An evaluation has been completed of related research results, such as life cycle tests, a plant life extension assessment, and a statistical technique for determining CRD system wear out.

Nuclear power plant operating experiences and survey responses from 15 nuclear plants are cited in support of the conclusions and recommendations presented in this section. Further analysis of the methods and techniques for detecting and mitigating aging effects is expected to yield testing and maintenance practices which are technically feasible and practical.

8.1 Conclusions

These conclusions are related to the susceptibility of CRD components to aging degradation and the safety significance of this phenomena. Observations from operating experience data and from a survey of 15 Westinghouse nuclear plants has led to several findings regarding system vulnerability and maintenance, respectively. The evaluation of the system's design to detect and mitigate the effects of aging has also led to some of the observations included in this section.

8.1.1 Susceptibility of the System to Aging

Based on the results of this study, the following components of the Westinghouse CRD system have exhibited aging characteristics worthy of continued attention. These components, and the primary aging mechanism affecting them, are:

1. cable - insulation degradation
2. coils - insulation degradation
3. Zircalloy guide tube - wear
4. drive rod and latch assembly - wear and fatigue
5. rod position indication detector - calibration drift
6. rod cluster control assembly - cracking and wear
7. fuses - fatigue
8. power electronics - overheating

Some of these components are not classified as "safety-related." However, because each can contribute to a rod block, rod drop, uncontrolled reactivity change, or tech spec violation, this report treats them as important to safety and plant availability.

The safety significance of the control rod drive system and the need to address aging degradation in the incipient stage is expressed in NUREG-1185, "Integrated Safety Assessment Report" for one of the oldest Westinghouse PWRs. This report concluded that aging "may be a factor in the perpetuation of control rod drive problems," and that failure or improper operation of the drive mechanism are safety concerns." Following a discussion of operational problems experienced at this plant, which are similar to the failures identified in Section 4 of this report, the authors of NUREG-1185 further concluded that failures of the control rod drives "constitute a symptom of a plant problem which has safety significance[31]."

8.1.2 Operating Experience

The evaluation of Licensee Event Reports (LERs), Nuclear Plant Reliability Data System (NPRDS) records, and Nuclear Plant Experience (NPE) summaries has provided the following findings:

1. Failures in the power and logic cabinets comprise approximately 40% of the reported failure data. The primary contributor to these failures is high ambient temperature.

2. Approximately 30% (i.e., 40 of 125 LERs) of the failures in the CRD system result in a rod drop leading to a reactor trip. The rod drop is presently a safety concern because of the flux depression introduced, and the challenge to the reactor protection system. Westinghouse has recommended changes to the protection system so that a rod drop will not initiate a reactor trip. This action will reduce the safety significance of a rod drop.

3. Wear of the rod cluster control assemblies is due to several independent types of age-related degradation: sliding wear, fretting wear, and cracking due to the interaction between the absorber and the cladding, and radiation induced effects in the tip region of the rodlet.

4. Stress corrosion cracking has been identified as a source of degradation in two areas, fuel assembly hold down spring clamp screws and control rod guide tubes, including the split pins.

5. The normally energized stationary gripper coils have experienced a much higher failure rate (order of magnitude) than the movable gripper and lift coils. Therefore, thermal stress from ohmic heating may be an important contributor to coil degradation.

6. Certain circuit boards in the power cabinet are more susceptible to failure than others located in the same cabinet. The firing circuit card is an example, with about 20% of the reported failures attributed to it. This card contains thyristors which are susceptible to damage from overheating.

7. Approximately 30% of the combined failures in the power and logic cabinets were associated with the fuse protection circuits, including the fuse and its associated mounting hardware (fuse clip). Several instances of observed fuse degradation, such as "fatigue" or "normal end-of-life", were found in the operating experience data.

8. The cables and connectors, which link the power cabinets to the CRDMs, accounted for about 15% of the system failures, with connector problems being the dominant contributor. Mechanical wear of the plug contacts and corrosion in the area of the connector pin mating surfaces were the degradation mechanisms identified. All of the reported failures occurred at plants in operation for more than five years.

9. A "generic" problem with calibration drift of the analog rod position indication subsystem during reactor heatups and cooldowns was identified by evaluating the data. However, this problem does not appear to be affected by plant age.

8.1.3 System Design Review

The detailed review of the design of the Westinghouse CRD system, supplemented by the results of the industry survey, led to several findings related to aging degradation, which could be attributed to deficiencies in design in the CRD system or its interfaces.

1. Several utilities have experienced CRD system cable insulation or jacket material degradation sufficient in magnitude to justify replacement of these cables. This degradation is attributed to the inability of the cable system to withstand the high temperatures experienced in the upper head region.

2. Modifications to the cooling of the power and logic cabinets has been necessary at several plants. Temperatures as high as 125°F have been recorded in the cabinets. This will deleteriously affect many of the components, which are typically designed for 90°F. The temperature of the cabinet is largely dependent on the ambient temperature in the area.

3. The number of connector problems in the upper head region due to moisture ingress or contamination from borated water leakage indicates the need for a more substantial connector design. The stresses from this relatively severe environment appear to be underestimated. Westinghouse has, in fact, changed the connector design in its newer installations and is reporting success, especially with the ability of the connector to withstand successive disconnections and reconnections[33].

4. The rod drop timing test is required to be performed once per cycle in accordance with the plant technical specifications. Pulling this fuse to perform a rod drop test reduces the force between the fuse clip and the fuse, which has resulted in spurious open circuits and subsequent rod drops. The design should include a more permanent means for satisfying this required testing.

5. A positive aspect of the Westinghouse CRD system design is that it contains sensors which detect certain component failures. An urgent alarm, which results in a rod block, or a non-urgent alarm, indicating a loss of redundancy, provide an important input to the control room operators.

8.1.4 Maintenance Practices

The review and evaluation of current maintenance and available inspection and monitoring methods has resulted in the following conclusions:

1. Preventive maintenance practices varies substantially from one plant to another, with some plants relying on the tech spec required testing to provide indication of system degradation.

2. Most preventive maintenance resources are applied to electrical components within the containment.

3. Based on the favorable responses from the utility survey, it is concluded that tech spec required activities (rod drop timing test and rod exercise) are beneficial in determining the operational readiness of the system.

4. The complexity of the system logic warrants specific procedures and detailed training for the personnel associated with maintaining it. It could not be concluded from the operating experience data or the results of the survey that this area is adequately addressed.

8.2 Recommendations

To more effectively detect and mitigate the effects of aging in the Westinghouse control rod drive system, it is recommended that changes be made in the areas of design, maintenance, and monitoring.

8.2.1 Design

Mitigation of the effects of aging may be successfully addressed through changes to the system design. The goals of these modifications are to reduce or eliminate the stresses which contribute to aging degradation, or improve the materials to better withstand the existing stresses.

Ventilation

The ventilation systems in the upper head region and in the area where the power and logic cabinets are located should maintain low ambient temperatures. It is important that operating personnel be made aware of unsatisfactory conditions so that prompt action can be taken. Maximum temperatures of 150°F and 80°F for these two areas are reasonable design goals for the ventilation systems. Similarly, operating personnel should be aware of the importance of the ventilation system on CRD performance.

Components

The integrity of the control rod drive system cables located in containment can be improved by using higher temperature rated assemblies. Several plants have upgraded their cable system to Tefzel insulation with a chlorosulfonated polyethylene jacket rated at 194°F. Other cable systems offered for the CRDMs are rated as high as 1000°F.

While this study did not reveal any problems with the control rod drive housing (primary system pressure boundary), it is recommended that research continue because of the failure consequences. As delineated in the pilot life extension study at Surry, cast stainless steel with a ferrite content of approximately 20% is vulnerable to thermal embrittlement. Ten of the control rod drive housings at Surry possess a ferrite content ranging from 13% to 21%.

The coils are designed for a temperature of 400°F. It is not clear why the stationary gripper coils are failing at a much higher rate than the movable or lift coils. The only apparent difference is that current (4.4 amps) is continuously applied to the stationary gripper coil to hold the control rods in position. The ohmic heating generated may contribute to the coil's degradation.

8.2.2 Maintenance and Monitoring

Because of the inaccessibility during operation of the mechanical and structural portions of the CRD system, it is extremely important to conduct and document a thorough inspection during refueling outages. Using underwater TV cameras, areas of wear should be noted and their cause determined. While it may be advantageous to contract some of this work to the nuclear steam supplier, it is imperative that records be maintained on site to document the conditions of critical parameters such as:

- guide tube wear,
- drive rod and latch wear,
- rodlet fretting, cracking, or bulging, and
- cable, connector, coil appearance.

In addition, techniques are being successfully implemented at some utilities to supplement these visual inspections. As discussed in this report, ultrasonics, eddy current, and profilometry are three of these techniques which could effectively determine the rate of component degradation as a plant ages. The proper use of wear management guidelines (including axial repositioning of the RCCAs) can distribute the wear along the cladding surface and extend the operational availability of the RCCAs. In fact, for plants with accelerated wear rates, Westinghouse recommends frequent (once per month) single step repositioning[33].

The ASME inservice inspection requirement specifies that welds on 10% of the peripheral CRD housings be inspected. This does not adequately assess the weld integrity for the interior housings. NDT techniques and equipment should be developed to allow for the remote inspection of the interior housings as well.

Monitoring the CRD system mechanical and electrical integrity is justified based on its safety significance and operational performance. It is recommended that a current signature analysis technique being used at one plant be evaluated by other utilities. With this technique, each coil current is traced during rod motion. Analysis of the recorded data determines the acceptability of the power and logic circuitry and the coil integrity. In addition, a rough indication of mechanical interferences can be ascertained. Refinement of this technique for on-line monitoring has been completed and is being marketed commercially.

A common maintenance practice of measuring the resistances of cables, connectors, and coils resistances at regulated conditions (base-line temperature) is also recommended following each refueling. Measurements of loop inductance or dissipation factor as provided by commercial systems, such as ECAD, may also be useful to monitor degradation.

Other functional indicators of possible value in detecting degradation of the CRD system are:

1. CRDM Cycle Counter: Since the amount of wear on components, such as the drive rod and latch, is directly related to rod movement, it is recommended that the number of control rod steps for each of the rods in the control bank(s) be counted.

2. CRD Housing Temperature: Thermal embrittlement of the pressure boundary may be a problem as plants age. To more accurately predict the performance of these materials, it is recommended that the temperature of selected housings be monitored at power conditions.

3. Operating Experience: With essentially fifty plants using the same CRD system design, tremendous benefits can be derived from shared information. Degradation experienced at older plants, for example, should influence the maintenance at newer plants.

8.3 Future Work

This study identified components within the Westinghouse control rod drive system whose performance is affected by aging. Recommendations have been made for detecting and mitigating aging effects. To determine the effectiveness of the recommendations presented, future work should consist of the following:

- Evaluation of plant-specific data for the testing and monitoring methods identified. The practicality of the testing as well as the technical benefits will be considered.

- An in-depth review of licensee activities in response to past NRC regulatory actions (i.e., Information Notices) to determine if the long-term aging effects of the problems have been addressed.

It is further recommended that any continued study of the Westinghouse CRD system be deferred until the phase 1 study of the Babcock and Wilcox and Combustion Engineering CRD systems are completed. It is expected that further evaluation of monitoring techniques and age-susceptible components would address applications in all three designs.

9. REFERENCES

1. Vora, J.P., "Nuclear Plant Aging Research (NPAR) Program Plan," NUREG-1144, Rev. 1, September 1987.

2. Fullwood, R., et al., "Aging and Life Extension Assessment Program (ALEAP) Systems Level Plan," BNL Report A-3270-12-86, December 1986

3. Final Safety Analysis Report, Consolidated Edison Company of New York, Indian Point Unit 2, Docket Number 50-247.

4. Riggs, R., "Control Rod Guide Tube Wear in Operating Reactors," NUREG-0641, June 1980.

5. Final Safety Analysis Report, Sequoyah Units 1 and 2, Docket Nos. 50-327 and 328.

6. Blanchard, A., and Katz, D.N., "Solid State Rod Control System - Full Length," WCAP-7778, Westinghouse Electric Corp., January 1972.

7. Shopsky, W.E., "Failure Modes and Effects Analysis of the Solid State Full Length Rod Control System," WCAP-8976, Westinghouse Electric Corp.

8. Blanchard A.E., "Topical Report - Rod Position Monitoring," WCAP-7571, Westinghouse Electric Corp., March 1971.

9. Blanchard, A.E. and Calpin, J.E., "Digital Rod Position Indication.

10. Sipush, P., et al., "Lifetime of PWR Silver-Indium-Cadmium Control Rods," EPRI NP-4512, Westinghouse Electric Corp., March 1986.

11. Final Safety Analysis Report, Vogtle Electric Generating Plant, Georgia Power Co., Docket No. 50-424.

12. USNRC Information Notice 82-29, "Control Rod Drive (CRD) Guide Tube Support Pin Failures at Westinghouse PWRs," July 1982.

13. NUREG-0452, "Standardized Technical Specifications for Westinghouse Pressurized Water Reactors," Revision 4, August 1981.

14. Miyaguchi, J., "Development of a PWR CRDM Data-Analyzing System" Mitsubishi, Kobe-Japan, Transactions, 1989 Winter Meeting, American Nuclear Society (ANS), November 1989.

15. Engel, R.J., "Application of a Weibull Hazard Analysis to an Aging/Wearout Model," Proceedings of ANS Topical Meeting on Nuclear Power Plant Life Extension, August 1989.

16. Hedin, F., et al., "EDF Revisits The Guide Tube Pin Problem," Nuclear Engineering International, November 1989.

17. Ericsson, E., "Guide Tube Support Pin Experience at Ringhals Plant, Sweden," Proceedings of International Nuclear Power Plant Thermal Hydraulics and Operations Topical Meeting, October 1984.

18. Gustafsson, J., "Inspecting Guide Tube Support Pins in Swedish PWRs," Nuclear Engineering International, November 1984.

19. "Evaluation of Cobalt Sources in Westinghouse Designed Three-and Four-Loop Plants," EPRI NP-2681, Westinghouse Electric Corporation, October 1982.

20. Glass, S.W., "Profil-360 High Resolution Steam Generator Tube Profilometry System," Babcock & Wilcox Co., 7th International Conference on NDE in the Nuclear Industry, February 1985.

21. Pasupathi, V., et al., "Determination and Microscopic Study of Incipient Defects in Irradiated Power Reactor Fuel Rods," BCL-585-1, Battelle's Columbus Laboratories, August 1977.

22. "Condition Monitoring Used at San Onofre," Nuclear News, January 1990.

23. Brown, E.J., "Localized Rod Cluster Control Assembly (RCCA) Wear at PWR Plants," AEOD Engineering Evaluation Report E613, December 1986.

24. Barley, W.J., and Wu, S., "Fuel Performance Annual Report for 1988," NUREG/CR-3950, Vol. 1-6 (PNL-5210) U.S. Nuclear Regulatory Commission and Pacific Northwest Laboratory, March 1990.

25. Ware, A.G., "Pressurized Water Reactor Control Rod Mechanisms and Reactor Internals," Chapter 7 of NUREG/CR-4731, Vol. 2, November 1989.

26. Standard Review Plan, NUREG-0800, U.S. NRC, Rev. 1, July 1981.

27. "PWR Pilot Plant Life Extension Study at Surry Unit 1: Phase 2," EPRI NP-6232-M, March 1989.

28. Franklin, D.G., et al., "LWR Core Materials Program: Progress in 1983-1984, EPRI NP-4312-SR, October 1985.

29. Piepszownik, L. and Procaccia, M., "Failure of the Rupture in Steel Pin of the Control Rod Assemblies in French Nuclear Plant," Paper 124 of EPRI NP-3912-SR, Volume 2, February 1985.

30. Dubourg, M., "Recent Development for Improving of PWR Flexibility to Load Follow and Frequency Control Operation," Conference on Structural Mechanics in Reactor Technology, August 1983.

31. "Integrated Safety Assessment Report - Haddam Neck Plant," NUREG-1185, Vol. 2, July 1987.

32. Gunther, W., et al., "Operating Experience and Aging-Seismic Assessment of Battery Chargers and Inverters, NUREG/CR-4564, Brookhaven National Laboratory, June 1986.

33. Correspondence from W.J. Johnson to S.K. Aggarwal, "Westinghouse Comments Regarding Draft NUREG/CR-5555," NS-NRC-90-3531, November 21, 1990.

APPENDIX A
Westinghouse CRD System Design Review

Section 2 of this report presents a broadly based, functional block diagram of the design of the Westinghouse CRD System. While this type of review is sufficient to gain a general understanding of system operation, in many cases it does not adequately describe the specific operating methods of certain components and subassemblies. Therefore, to adequately assess the implications of the operating experience failure data obtained for this NPAR study, a more in-depth review of the Westinghouse CRD system design was necessary. This review provided additional insight into the specific operating characteristics of certain components and subassemblies. The detailed information obtained during this review is presented in this appendix.

A.1 Rod Cluster Control Assembly and Reactor Internal Components

Figure A.1 shows an individual absorber rod. The number of individual absorber rods contained in an RCCA will vary with the size of the fuel assembly. Current Westinghouse fuel assembly designs include 14x14, 15x15, and 17x17 arrays. (Westinghouse also has a 16x16 design; however, it is not used in domestic plants.) In a 15x15 fuel assembly array, the fuel rods are arranged in a square pattern with 15 rod locations on each side. Of the 225 possible fuel rod locations for each assembly, 20 are occupied by guide thimbles for individual absorber rods of the rod cluster control assembly. Similarly, the number of guide thimbles is 16 for the 14x14 fuel array and 24 for the 17x17 arrays.

As illustrated by Figure A.2, the fuel assembly guide thimbles form an integral part of the assembly and occupy locations within the regular fuel rod pattern where fuel rods have been deleted. Figure A.3 shows the basic elements of a typical fuel assembly. As shown in this figure, the guide thimbles, in conjunction with the grid assemblies and top and the bottom nozzles, comprise the structural skeleton of the fuel assembly. Each guide thimble is fabricated from a single piece of tubing which is drawn to two different diameters. The larger diameter at the top provides a relatively large annular area for rapid insertion during a reactor trip. The bottom portion of the guide thimble is of a reduced diameter which provides a dashpot to absorb the energy of a control rod as it falls into the core following a reactor trip. Flow holes above the dashpot provide a path for displaced water during a reactor trip and permit cooling water to enter during normal operation. To prevent a rapid change in tube diameter, the transition zone between the two diameters is gradually tapered. The tubing material may be either stainless steel, used in Westinghouse HIPAR fuel assemblies, or Zircaloy-4 used in Westinghouse LOPAR fuel assemblies. The bottom ends of the guide thimbles are closed off by a welded end plug and are fastened to the bottom nozzle of the fuel assembly during fabrication. The top ends of the guide thimbles are expanded into stainless steel sleeves, which are welded to the top grid of the fuel assembly. The sleeves are fitted through individual holes in the adaptor plate of the fuel assembly and are located above the position of the control rod tips when the RCCA is in the fully withdrawn position.

Control Rod Guide Tube (CRGT) assemblies, shown in Figure A.4 and A.5 shield and guide the RCCA above the core. They are fastened to the upper support and are guided by pins in the upper core plate for proper orientation and support. In the lower portion of the CRGT, sheaths and split tubes provide continuous lateral support for the control rods over a length of approximately 40 inches above the upper core plate. Above this region of the CRGT, guide plates provide intermittent lateral support for the control rods. Additional guidance for the drive rods of the control rod drive mechanisms is provided by the upper guide tube extension, which is attached to the upper support.

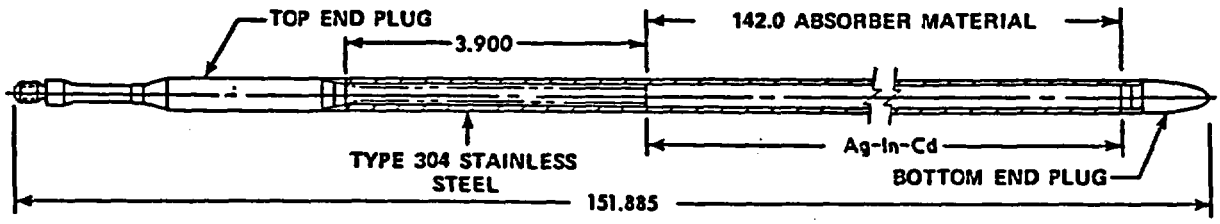

Figure A.1 Individual absorber rod

A.2 CRDM Operation

During normal steady-state plant operation, a CRDM holds its attached RCCA withdrawn from the core in a static position. In this mode only one coil, the stationary gripper coil, is energized. The drive rod assembly and attached RCCA hang suspended from three stationary gripper latches. Electromagnetic forces are required to maintain an RCCA in a position above the core while insertion is accomplished by the force of gravity acting on the weight of the assembly. Therefore, the CRDM will remain in this position until a stepping sequence is initiated by the Rod Control System or an interruption in electrical power causes the RCCA to fall, by gravity, into the core. Upon removing electrical power, the RCCA total insertion time is designed to be less than 2.2 seconds.

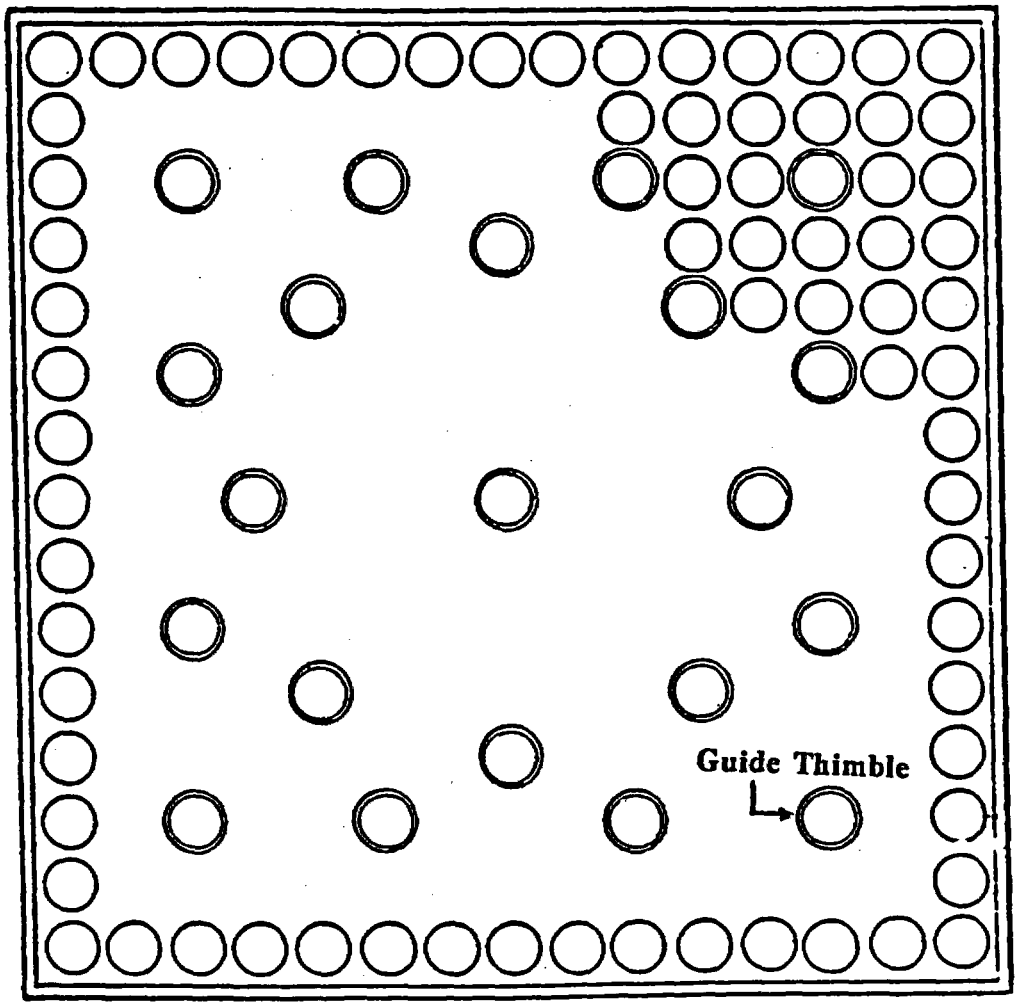

FUEL ASSEMBLY CROSS SECTION

15 X 15 PATTERN

Figure A.2 Fuel assembly guide thimbles

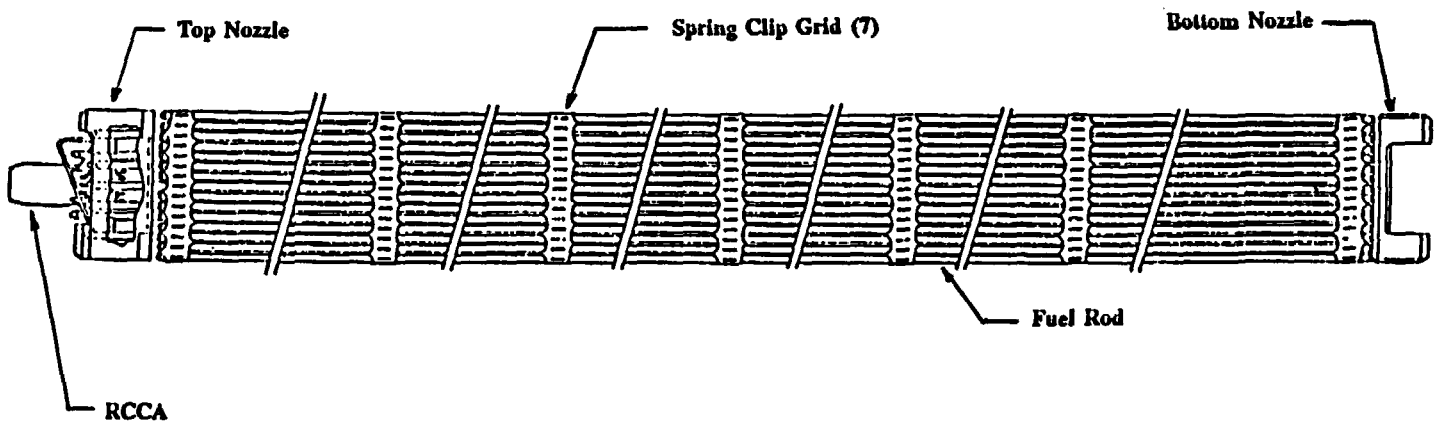

Figure A.3 Fuel assembly

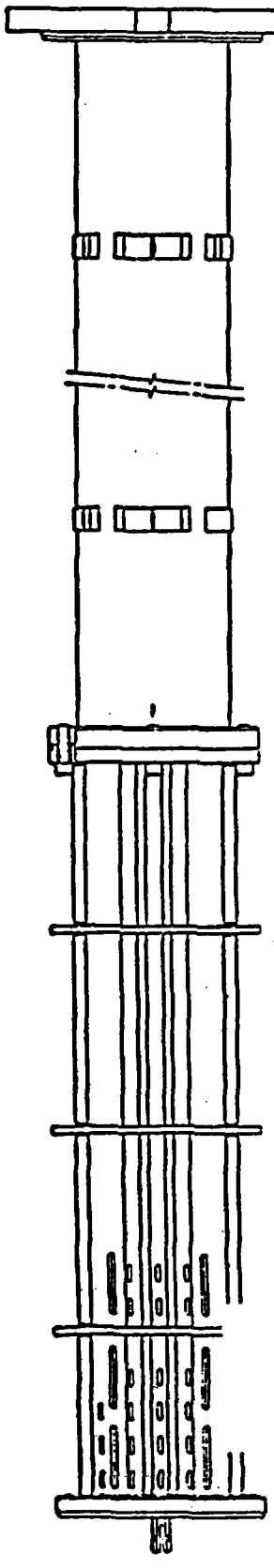

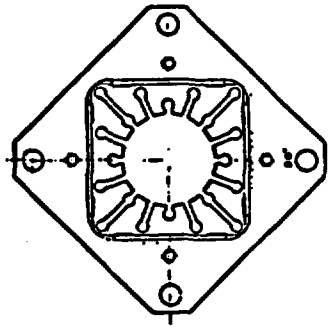

TOP VIEW

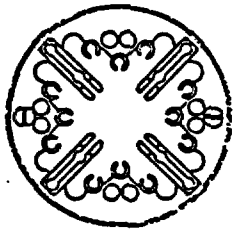

BOTTOM VIEW

Figure A.4 Control rod guide tube assembly

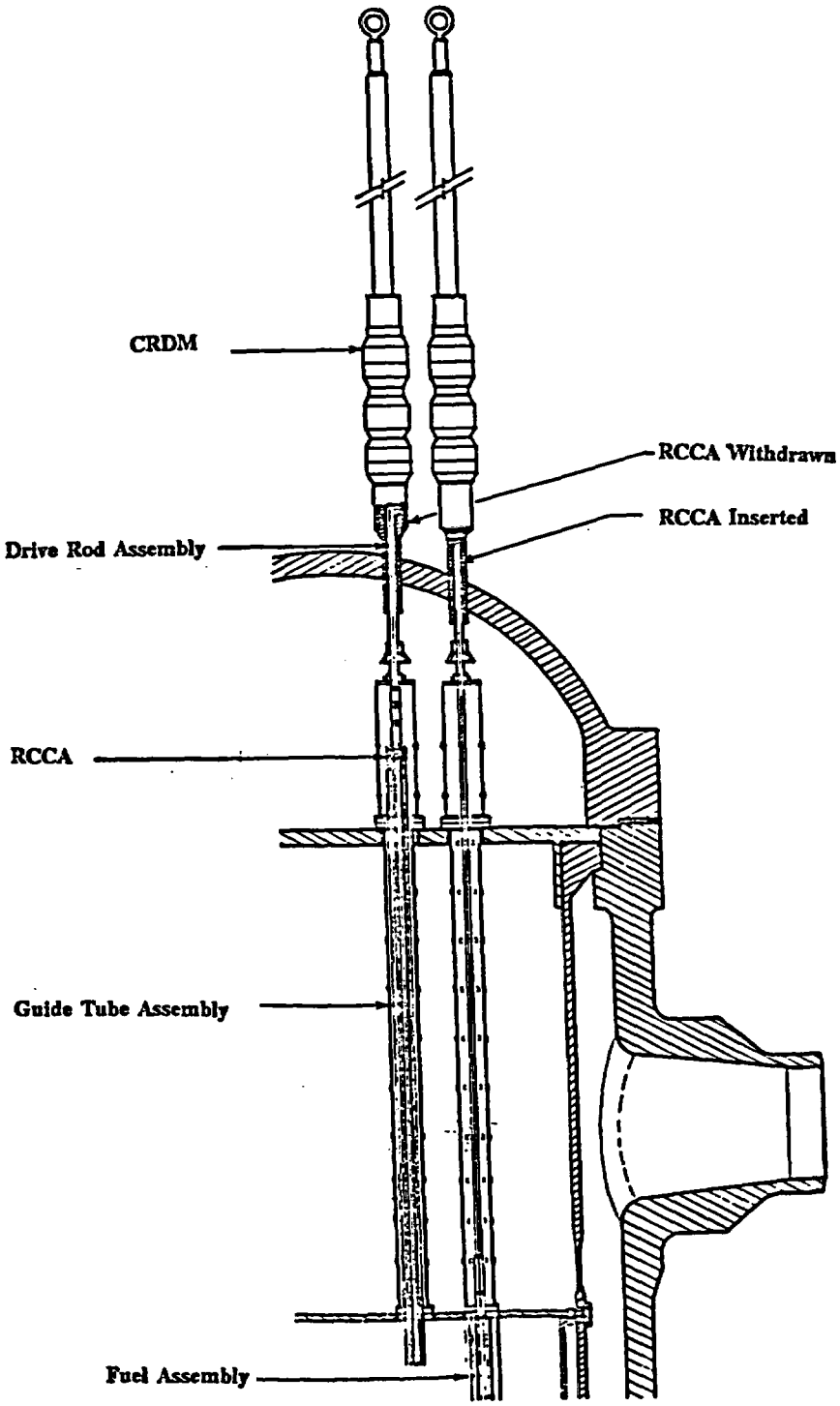

Figure A.5 Control rod guide tube

- **RCCA WITHDRAWAL**

This section describes the sequence of events required to accomplish a single "step" (5/8-inch) of RCCA withdrawal. Each cycle is shown in Figure A.6.
Starting with the RCCA held in a static position, with its stationary gripper coil energized, the withdrawal sequence is as follows:

1. Position Movable Gripper Latches

(MOVABLE GRIPPER COIL - ON)

The armature of the movable gripper raises and swings the latches into a drive rod assembly groove. A 1/16-inch clearance exists between the movable gripper latch teeth and the drive rod.

2. Transfer Load to Movable Gripper Latches

(STATIONARY GRIPPER COIL - OFF)

The force of gravity, acting upon the drive rod assembly and attached RCCA, causes the stationary gripper latches and armature to move downward 1/16 of an inch until the load of the drive rod assembly is transferred to the movable gripper latches. The armature continues to move downward and swings the stationary gripper latches out of the drive rod assembly groove.

3. Raise RCCA One Step (5/8")

(LIFT COIL - ON)

The 5/8-inch gap between the lift armature and the lift pole closes and the drive rod assembly raises up one step (5/8-inch).

4. Transfer Load to Stationary Gripper Latches

(STATIONARY GRIPPER COIL - ON)

The armature of the stationary gripper raises and closes the gap below the stationary gripper pole. The three links, pinned to the plunger, swing the stationary gripper latches into a drive rod assembly groove. The latches contact the drive rod assembly and lift it 1/16 of an inch, transferring the load from the movable gripper latches to the stationary gripper latches.

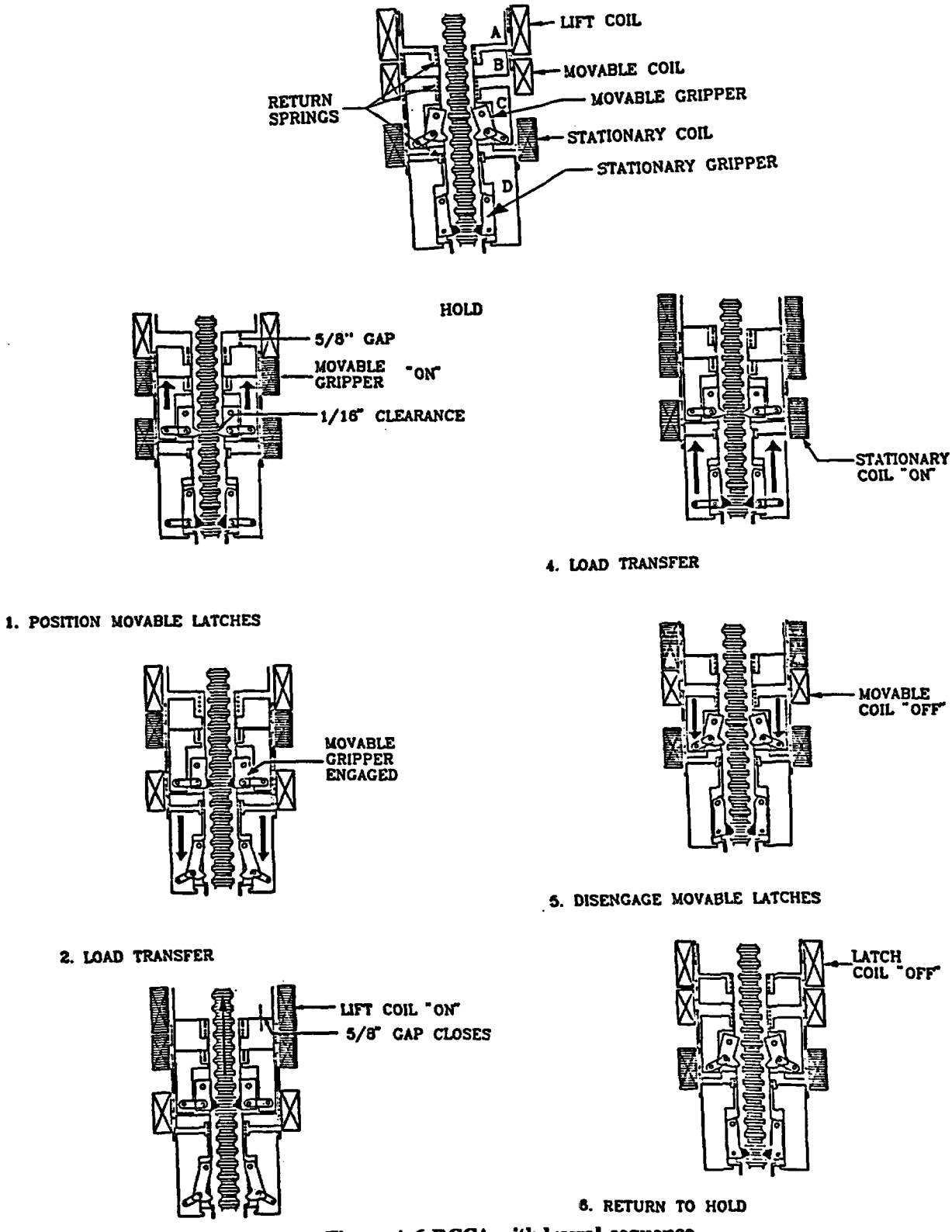

Figure A.6 RCCA withdrawal sequence

5. Disengage Movable Gripper Latches

(MOVABLE GRIPPER COIL - OFF)

Under spring and gravity force the armature of the movable gripper separates from the lift armature. The three links pinned to the armature swing the three movable gripper latches out of the drive rod assembly groove.

6. Return to Hold

(LIFT COIL - OFF)

The gap between the lift armature and lift pole opens. The movable gripper latches drop 5/8 of an inch to a position adjacent to the next rod drive assembly groove.

The sequence described above is completed for each step of RCCA withdrawal. The sequence may be repeated at a rate of up to 72 steps per minute (45 inches/minute) with the rate of motion continuously variable from this maximum rate to a typical minimum rate of 6 steps per minute (3.75 inches/minute). The speed of RCCA withdrawal is controlled by varying the repetition rate of the current pulses to the coil. The magnitude of the required coil current is fixed at 7 1/2 amps for the movable gripper coil while the magnitude of operating coil current supplied to the stationary gripper and lift coils is profiled according to the specific function to be performed. For example, the stationary gripper coil requires 7.5 amps to perform a stepping sequence, but only 4.2 amps are required to hold an RCCA in a fixed position. This reduced level of stationary coil current reduces thermal heating of the coil. Additionally, the lift coil requires an initial current of 40 amps to operate. However, since the magnetic air gap is closed once the lift coil is in the raised position, less current is required to hold it. Therefore, only 16 amps of current are necessary for the lift coil to complete its cycle once energized. This lower value of the current to the lift coil permits a faster decay of current when release is desired.

- RCCA INSERTION

The sequence for RCCA insertion is similar to that for withdrawal. Starting with the stationary gripper coil energized, the insertion sequence, is as follows:

1. Position Movable Gripper Latches (Raise One Step)

(LIFT COIL - ON)

The 5/8 of an inch gap between the lift armature and lift pole closes. The movable gripper latches are raised to a position adjacent to a drive rod assembly groove.

2. Engage Movable Gripper Latches

(MOVABLE GRIPPER COIL - ON)

The armature of the movable gripper rises and swings the latches into a drive rod assembly groove. A 1/16 of an inch axial clearance exists between the latch teeth and the drive rod assembly.

3. Transfer Load To Movable Gripper Latches

(STATIONARY GRIPPER COIL - OFF)

The force of gravity acting on the drive rod assembly causes the stationary gripper latches and armature to move downward 1/16 of an inch until the load of the drive rod assembly is transferred to the movable gripper latches. The armature continues to move downward and swings the stationary gripper latches out of the drive rod assembly groove.

4. Insert RCCA One Step (5/8")

(LIFT COIL - OFF)

Under the combined forces of gravity and springs, the lift armature separates from the lift pole and the drive rod assembly drops down 5/8 of an inch.

5. Transfer Load To Stationary Gripper Latches

(STATIONARY GRIPPER - ON)

The armature raises and closes the gap under the stationary gripper pole. The three links, pinned to the armature swing the stationary gripper latches into a drive rod assembly groove. The latches contact the drive rod assembly and lift it 1/16 of an inch, which transfers the load of the drive rod assembly from the movable gripper latches to the stationary gripper latches.

6. Return to Hold

(MOVABLE GRIPPER COIL - OFF)

The armature of the movable gripper separates from the lift armature under the combined forces of a spring and gravity. Three links, pinned to the armature, swing the movable gripper latches out of the drive rod assembly groove.

The single insertion cycle described above will cause the RCCA to insert into the core by one step or 5/8 of an inch. As for withdrawal, this sequence may be repeated at a rate up to 72 steps/minute (SPM) (45 inches/minute).

- **REACTOR TRIP**

The removal of electrical power at any time during the operating sequence allows the drive rod to drop by gravity. For example, if power to the stationary gripper coil is removed while the RCCA is being held in a static position, the combined weight of the drive rod assembly and RCCA is sufficient to move the latches out of the drive rod assembly groove and the control rod will fall into the core. The trip occurs as the magnetic field, which holds the armature of the stationary gripper against the pole, collapses and the armature is forced down by the weight acting upon the latches. The latch return springs are not required for tripping since the linkage geometry is not self locking. After the drive rod assembly is released by the mechanism, it falls freely until the individual absorber rods enter the dashpot portion of their guide thimble tubes.

A.3 Rod Control System Operation

During plant startup, the shutdown banks of control rods are the first rods to be withdrawn and are moved to their "full out" position manual control. Criticality is always approached with a control bank group of rods after the shutdown banks have been fully withdrawn. The control banks are withdrawn in a predetermined programmed sequence (i.e., Control Bank A, B, C, D). Control banks are inserted in the reverse sequence (i.e., D, C, B, A,)

When reactor power is between 15 and 100 percent, the rod control system may be placed in the "Automatic" mode of operation. In this mode, the operating speed and direction of control bank CRDMs is automatically determined by the rod control system in response to demand signals received from the reactor control system. Control rod positioning may be performed automatically whenever the reactor power is above 15% and manually at any time. During normal, steady state plant operations, the primary function of the reactor control system is to regulate the operation of the rod control system, as required to maintain a programmed average temperature in the reactor coolant system. The control system will also provide initial compensation for reactivity changes caused by fuel depletion or xenon transients. (Final compensation for these effects is performed by periodically adjusting the boron concentration of the reactor coolant system)

The average coolant temperature varies linearly from 0 to 100% power, and they are measured from the hot and cold leg (steam generator inlet and outlet) of each reactor coolant loop. An average temperature $(T_h + T_c)/2$ for each loop is then determined. The average of these four measured average temperatures becomes the main control signal of the reactor control system to command the direction and speed of control rod motion.

- **Sequential Group Movement and Rod Speed**

A variable speed, sequential method of rod positioning permits the reactor control system to finely control the average temperature of the reactor coolant system by inserting small amounts of reactivity at low speed. Upon receipt of a command signal for "IN" or "OUT" rod motion, the control banks move at a predetermined speed with staggered stepping of the groups within the same bank. Staggering the movement of the groups of rods within a bank permits smaller incremental changes in reactivity. The staggered movement of groups is illustrated in Figure A.7. In the example shown it is assumed that at time=0, the Group 1 rods of Control Bank A are withdrawn at a rate of 6 steps/minute. After a five second delay, the Group 2 rods of Control Bank A will start to withdraw. The length of delay depends upon the rod speed, and is equal to 1/2 of the total stepping time. For a rod speed of 6

steps per minute, one step is performed every 10 seconds. Therefore, Group 2 movement is delayed 5 seconds. At the maximum speed (72 SPM), the second group starts its step, while the first group is completing its step. Upon removal of the command signal, all rod motion stops. However, a group that is still in sequential motion will complete its entire step before halting. Reversal of direction is programmed such that the last group to stop will now be the first group to move in the new direction.

In the manual mode the rod speed or "stepping rate" of the control or shutdown banks of rods is adjustable between 9 and 72 steps per minute (5 to 45 inches/minute). However, the stepping rate of the shutdown banks is normally preset at 72 steps per minute. In the automatic mode, the stepping rate of the control banks is controlled over a range of 6 to 72 steps per minute, in response to a rod speed demand signal generated by the reactor control system.

The time required for a CRDM to complete a single step (i.e., 5/8" withdrawal or insertion) is fixed at 780 milliseconds. This is the maximum reliable sequencing speed of the electro-mechanical components of the mechanism. Therefore, a desired rod speed may only be obtained by varying the time interval between coil sequencing operations. For example, a rod speed of 6 steps per minute corresponds to one step every 10 seconds. The actual mechanism operation, however, is completed in the first 780 milliseconds of this 10 second cycle which leaves a "dead time" of 9.22 seconds before the next coil sequence or step is initiated. Similarly, the fastest available rod speed of 72 steps per minute corresponds one step every 834 milliseconds. Again, the CRDM completes its operation in 780 milliseconds leaving a "dead time" of 54 milliseconds before the initiation of the next step.

- **Bank Overlap**

To compensate for the reduced effectiveness of the control rods at the top and bottom of their travel and to maintain a relatively smooth constant reactivity addition rate, the control banks are programmed so that bank movement is overlapped (Figure A.8). On a reactor startup, Control Bank A is withdrawn until it reaches a preset position (approximately 115 steps). At this point, Control Bank B starts moving out in synchronism with Bank A. Control Bank A stops when it reaches the top of the core; Bank B continues until it reaches a preset position near the top of the core, at which time Bank C begins to move out in synchronism with Bank B. This withdrawal sequence continues until the plant reaches the desired power level. The overlap setpoints are preset by thumbwheel switches located in the logic cabinet of the rod control system. For example, a bank overlap setpoint of 100 steps means that the last 100 steps of a banks withdrawal travel will be overlapped by the next bank in the withdrawal sequence. In the overlap region, the Group 1 rods of each of the two overlapped banks step simultaneously; similarly, the Group 2 rods of the two overlapped banks also step simultaneously.

A.3.1 Power Cabinets

The power cabinets contain solid-state electronic components, which convert the 260V three-phase a-c supply power fed from the M-G sets to pulses of d-c current suitable for operation of the CRDM coils. The electronic circuitry contained in each steel enclosed cabinet is functionally identical, with each cabinet supplying up to three groups of rod banks, each group consists of up to 4 RCCAs. To provide a clearer understanding of the operation of the power cabinet circuit, the following section describes the basic principles and methods of a-c to d-c voltage conversion. It also discusses specific details related to the operation of the power cabinet circuits.

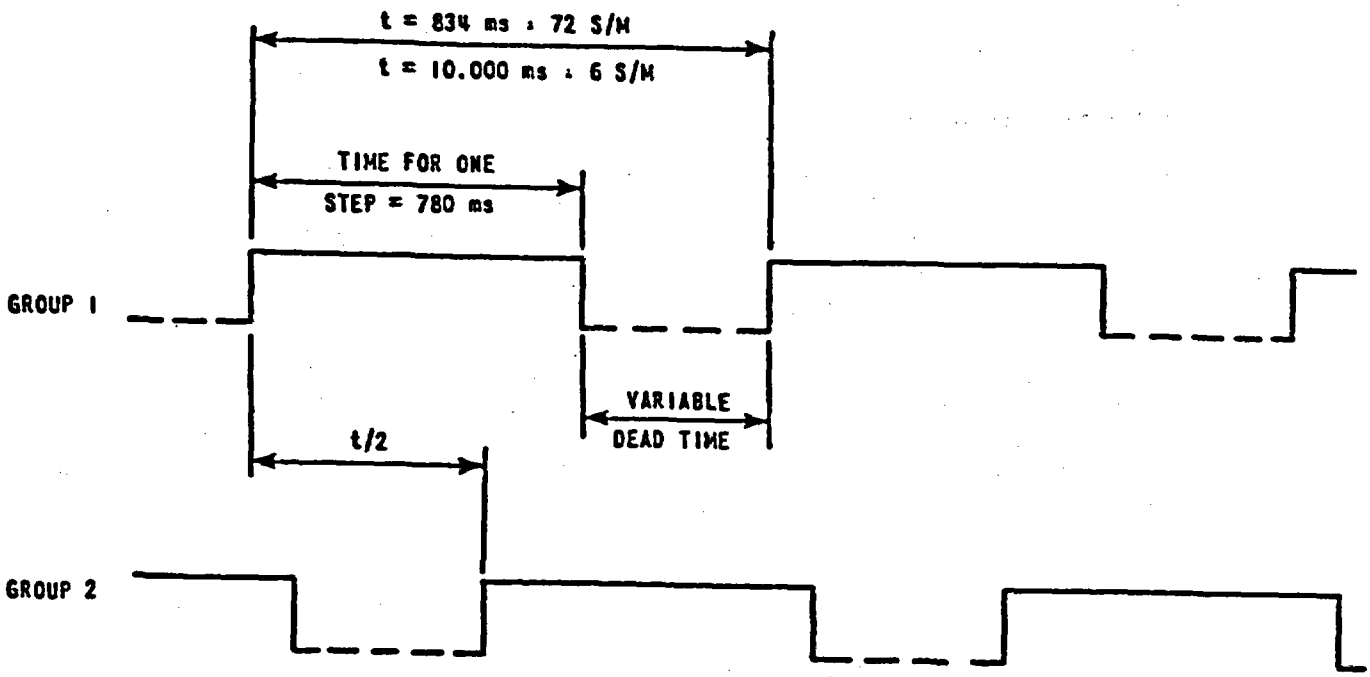

Figure A.7 Sequencing of groups within banks

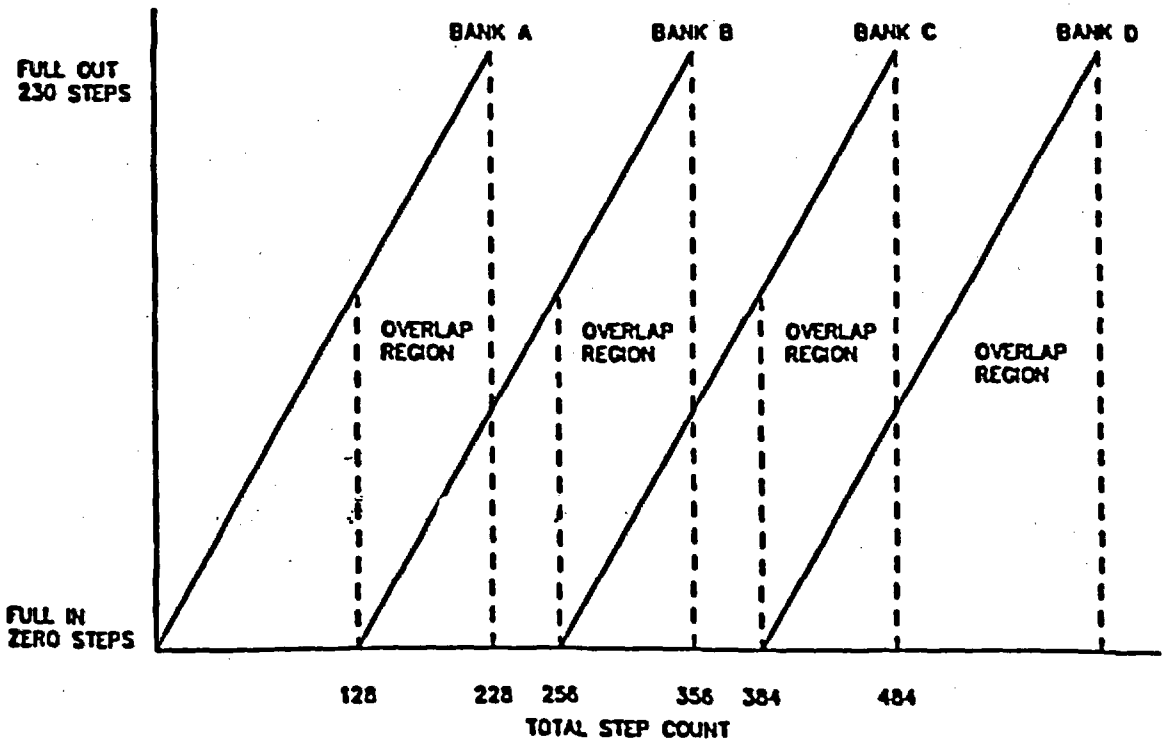

Figure A.8 Control bank overlap program

- **A-C TO D-C Conversion Circuits**

The process of converting an a-c input voltage to a d-c output voltage is known as rectification. In its simplest form, the rectification of a single phase of a-c voltage may be accomplished by a single diode.

A diode is an electronic device which permits normal current flow in only one direction. Current is allowed to flow only during those periods that the polarity of a-c input voltage is positive (above zero). When the a-c input reverses polarity (during the second 180° of its cycle), the diode is "cut-off", essentially blocking all current flow. No d-c voltage will appear at the output terminals. The output voltage will remain off until the input voltage again rises above zero. This type of voltage conversion, where the output voltage appears only during one-half cycle (180°) of the applied a-c input voltage is called "half-wave" rectification. It should be noted that the level of d-c output voltage available from this type of circuit is "uncontrolled". That is, the average value of the d-c output voltage is either at some full maximum value, or zero. The inability to control the range in magnitude of output voltage makes this circuit unsuitable for use in the Rod Control System since, as discussed previously, the operating coils require a "profiled" pulse of current for proper operation.

By simply replacing the diode with another type of electronic device called a thyristor, however, a fully controllable a-c to d-c rectification circuit may be achieved. When a thyristor is forced into conduction, its operation is basically very similar to a diode. As illustrated by Figure A.10, a thyristor has an additional terminal called a "gate". A thyristor will block current flow in either direction (remain off) until a small pulse of current, or trigger, is applied to its "gate" terminal. The application of this trigger pulse forces the thyristor into conduction. The thyristor operates similarly to the diode.

By controlling the time at which the gate trigger is applied, in relation to the positive half cycle (0° to 180°) of the applied a-c waveform, the conduction time of the thyristor may be controlled. The ability to control the amount of time that the thyristor is conducting enables the magnitude of the average value of its d-c output voltage to be regulated. The point on the applied a-c waveform that the trigger pulse is applied is called the "phase angle" or "firing point". Triggering the thyristor during small phase angles (i.e., close to 0° of the applied a-c waveform) permits it to conduct for a longer period of time and the average value of its d-c output will be high. Conversely, the application of a trigger pulse with a large phase angle (close to 180°) will permit it to conduct for a much shorter period of time, producing a relatively small average value of d-c output voltage[32].

Taking this basic, single-phase, thyristor rectifier circuit one step further produces a three-phase, half wave, fully controllable bridge rectifier circuit similar to the type used in the power cabinets of the rod control system. Since, in a three-phase supply, there is a 120° phase difference between each phase, a forward voltage is simultaneously applied to two of the three thyristors at any given time. The average level of d-c voltage that is applied to the CRDM coils may, therefore, be varied between a maximum and minimum value by controlling the firing point of each thyristor.

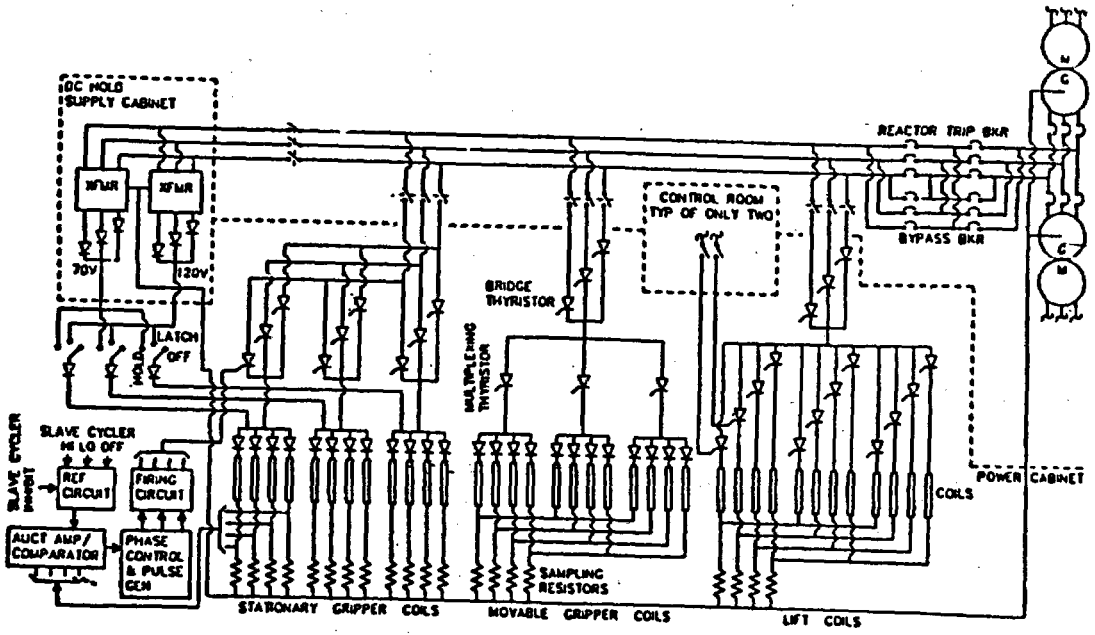

Figure A.9 CRD power distribution

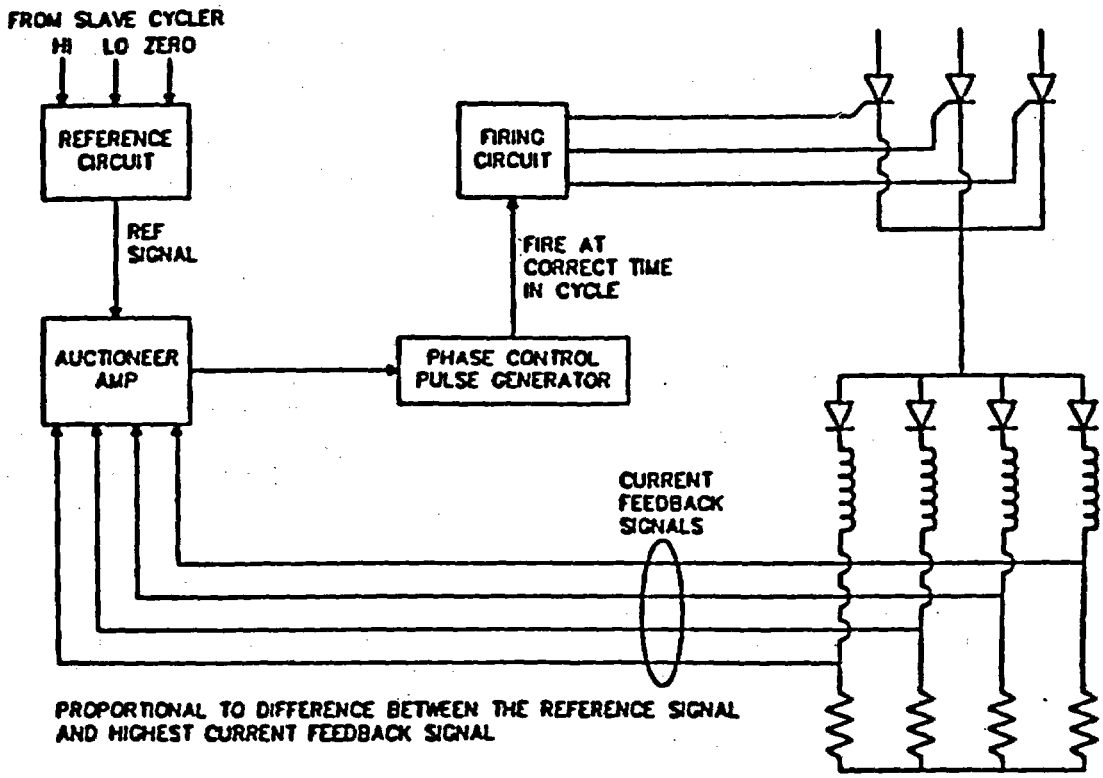

Figure A.10 Thyristor bridge control

- **Power Cabinet Operation**

A typical 4-loop plant uses five separate power cabinets which distribute d-c current command signals to 53 CRDMs. In the this section a single power cabinet (Power Cabinet 1AC) is described. Although the operation of only one cabinet is described, the circuits contained in each cabinet are functionally identical.

The power cabinet in Figure A.9 uses 5 phase controlled, half-wave, thyristor bridge circuits which provide power to the stationary, movable, and lift coils of the Group 1 rods located in Shutdown Bank 1, Control Bank A, and Control Bank C.

Three bridge circuits supply the three groups of stationary gripper coils (one bridge circuit per group). A separate bridge is required for each stationary coil group because two groups will need to be held in the "hold" position while the other group is cycling through a withdrawal or insertion sequence.

One bridge circuit supplies all three groups of movable gripper coils through three multiplexing thyristors. In this case, only one bridge is required because only one of the three groups in this cabinet can be moving at one time.

The three groups of lift coils are also supplied from a single bridge, with the lift coil power supplied through a separate multiplexing thyristor located in series with each coil. As for the movable coils, only one set of bridge thyristors is provided for the lift coils because only one of the three groups in this cabinet can be moving at one time.

The multiplexing thyristors are actuated by rod group selection signals generated in the logic cabinet and act as on/off switches to block current to all but the selected rod group.

The thyristor bridge circuits supply a predetermined, regulated current to the CRDM operating coils. This current is established by a thyristor bridge control circuit (Figure A.10), which automatically varies the firing point (phase angle) of the thyristors in response to command signals generated by a slave cycler circuit located in the logic cabinet.

- **Thyristor Bridge Control**

As shown in Figure A.10, the four coils in each group are connected in parallel. This connection causes an equal amount of voltage to appear across each coil. The stationary coils are provided with blocking diodes located in the supply line of each coil. These diodes prevent collapsing magnetic fields from interacting with the gripper latches when power is suddenly removed from the coils (as during a reactor trip).

Current to each coil passes through a series connected sampling resistor. The voltage developed across each sampling resistor is fed back to an auctioneering amplifier. This circuit compares the feedback signal to a reference signal developed from the current command of the slave cycler. Based on this comparison, the auctioneering amplifier generates an error signal that is proportional to the difference between the reference signal and the highest current feedback signal. This error signal is applied to a phase control pulse generator, which determines the correct firing point for the bridge thyristors and provides a thyristor trigger pulse of the proper waveshape and amplitude. Since the control system is feedback regulated, the system compensates for large changes in coil resistance with

temperature. The circuit arrangement for the movable and lift coils is similar, however, the lift coils do not actuate drive latches and, therefore, do not require blocking diodes.

A.3.2 Logic Cabinet

The logic cabinet contains all the low level electronic signal processing circuitry. In response to demand signals received from the reactor control system and the main control board, this unit develops and transmits the applicable power cabinet switching commands. The logic cabinet is comprised of the following subassemblies: (1) Pulser, (2) Master Cycler, (3) Bank Overlap Unit (4) Slave Cyclers, and (5) the Shutdown Bank C and D Control (Figure A.11).

The logic cabinet uses solid state integrated circuits, mounted on plug-in printed circuit cards. Relays required to drive equipment external to the system, such as the plant computer, annunciators, and equipment for the bank demand position indication, are also located in the logic cabinet.

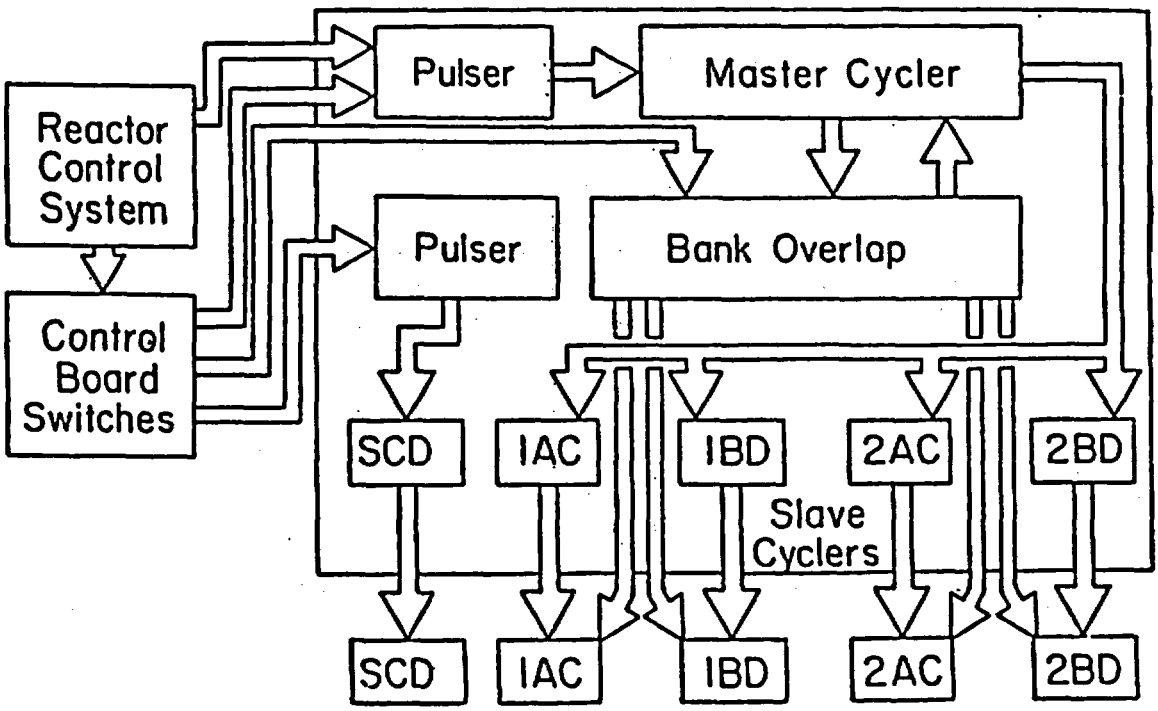

Figure A.11 Logic cabinet block diagram

- **Pulser**

In response to rod speed command signals received from the reactor control System, the pulser converts the steps-per-minute speed order to six times as many pulses per minute (e.g., 72 SPM in = 432 PPM out) and transmits this signal to the master cycler. The pulser begins operating immediately upon receiving a command signal for IN or OUT rod motion and generates a strobe pulse that causes the master cycler to count forward for outward rod motion or backward for inward rod motion. The pulser also contains an oscillator circuit, which generates timing control clock pulses that are transmitted to the slave cyclers to ensure that they operate at the correct time.

- **Master Cycler**

The master cycler receives the converted rod speed timing pulses from the pulser (48 to 432 Pulses/Min) and produces a cycling command count sequence for slave cyclers associated with each power cabinet. This subassembly is basically a reversible counter, which operates over a 0 to 5 count range. The outputs to the slave cyclers are in the form of "GO" pulses that are taken at counts 0 and 3. Based on the sense of a rod direction strobe (also developed by the pulser) each timing pulse either advances the counter by one count for OUT rod motion or reduces the counter by one count for IN rod motion. Since six counts are required to obtain each "GO" pulse to a particular slave cycler, the slave cycler is pulsed at a rate between 6 GO pulses/minute (for a rod speed of 8 steps/minute) and 72 GO pulses/minute (for a rod speed of 72 steps/minute).

$$\frac{48 \text{ pulses/minute}}{6 \text{ pulses/GO pulse}} = 8 \text{ spm} \qquad \frac{432 \text{ pulses/minute}}{6 \text{ pulses/GO pulse}} = 72 \text{ spm}$$

A "fast pulse" control pulses the master cycler at a rapid rate until a GO pulse to a slave cycler is obtained. The CRD System then operates at the normal rate. This feature provides immediate rod motion on instruction from an IN or OUT command before the pulser can integrate the speed signal from the reactor control system to pulse at the required rate.

A slave cycler associated with Group 1 rods is connected to operate at count zero and a second slave cycler associated with Group 2 rods is connected to operate at count three. This arrangement results in the sequencing of groups within banks.

Because of the reversible feature of the counter the last rod group that moved is the first group to move in the new direction. Pushbuttons are provided in the logic cabinet for manually presetting or resetting the master cycler counter.

- **Slave Cycler**

There is one slave cycler for each power cabinet. It sequences its associated power cabinet, and hence the CRDMs, through one step IN or OUT for each GO pulse from the master cycler.

GO pulses from the master cycler start the operation of the slave cycler counter. Clock pulses from an oscillator on the pulser drive the seven bit binary counter from 0 to 127 in 780 milliseconds (time to complete one step). At the end of 780 msec the counter is reset to zero to await another GO pulse. The lift, movable, and stationary coil current decoder cards of this subassembly can be set to give

outputs corresponding to full (HI), reduced (LO), or zero (OFF) current orders to the CRDM coils at any count between 0 and 127. Since the cycling sequence takes 780 milliseconds, the outputs can be adjusted every 780/128 (or 6.1) milliseconds. The current orders are transmitted to the firing control circuits of the thyristor bridge located in the power cabinet.

- **Bank Overlap Unit**

The bank overlap unit receives counts from the master cycler and records one count IN or OUT for the insertion or withdrawal of the two groups making up a bank. The counts are recorded on a decimal counter that counts up to 999 and back down. The decimal counter is advanced one step up or down by the master cycler counting through 0 forward or backward.

The bank overlap unit directs the master cycler GO pulses to the proper slave cycler and multiplexes the power cabinets at the predetermined overlap setpoints. Six 3-digit thumbwheel switches set the bank overlap points.

Selection of individual banks for motion out of the normal programmed sequence is accomplished with the bank selector switch through the bank overlap unit. When an individual bank is selected, the counting feature of the bank overlap unit is locked out. Before the system is put back into overlapped bank operation, by selecting MANUAL or AUTOMATIC on the bank selector switch, the banks must be manually returned to the positions held before they were moved. Individual bank motion is not used for normal operation except for mechanism testing, special physics testing, and recovery of dropped rods.

- **Shutdown Bank C and D Control.**

This control operates the two additional shutdown banks (C and D) required by the rod grouping on four-loop plants. The two banks are selected by the bank selector switch, and are manually controlled by the IN-HOLD-OUT lever.

The control consists of three units: logic, pulser and slave cycler. The logic consists of timing circuits for the slave cycler, input/output circuits for direction and position signals and alarm detection and processing circuits. The pulser and slave cycler units are identical to other units. The outputs of Shutdown Bank C and D are fed (AC coupled through AC amplifiers) to the Power Cabinet. The speed rate is generated from the pulser unit and is normally set at 72 steps per minute.

APPENDIX B
SUMMARY OF LICENSEE EVENT REPORTS FOR THE WESTINGHOUSE CONTROL ROD DRIVE SYSTEM
January 1984 - December 1988

Table B.1	Cable/connector LERs
Table B.2	Human error LERs
Table B.3	Power and logic cabinet LERs
Table B.4	CRDM LERs
Table B.5	LERs with failure cause not delineated
Table B.6	Rod position indication LERs

Table B.1 Cable/connector LERs

	Plant	LER #	Age at Time of Failure (years)	Failure Description
1.	Farley 1	85-012	8	Cable short circuit on supply to stationary gripper. Two control rods dropped which caused a reactor trip from 99% power.
2.	Farley 1	86-004 86-008	9	Short circuits in electrical penetrations (2 events) resulted in blown fuse rod drops, and reactor trips. Low resistance was found in several conductors. (All CRD system electrical penetration modules to be replaced during outage.)
3.	Salem 2	85-009	5	High resistance connection in cable to stationary gripper coil found during testing. Dropped rod resulted in a reactor trip from 100% power. (Improved connector design being sought.)
4.	San Onofre 1	87-008	20	Kapton insulation damage due to mechanical stress on polyolefin jacket. Low insulation resistance found on 22 CRDM coil circuits.
5.	Surry 1	86-026	14	Bad connector at vessel caused rod drop. A rod drop and manual reactor trip from 80% power occurred.
6.	Turkey Point 3	88-001	16	Pin on connector for the movable gripper coil was found defective. A dropped rod resulting in a turbine runback from 100% to 70% power followed. This occurred during periodic exercising of rod.
7.	Turkey Point 4	85-021	11	Bad connection at vessel caused rod drop. A reactor trip from 100% power resulted.

Table B.2 Human error LERs

	Plant	LER #	Age at Time of Failure (Years)	Failure Description
1.	Cook 2	86-028	8	Calibration procedure error resulted in an inoperable rod insertion limit monitor.
2.	Indian Point 2	86-031	13	Error in bi-weekly rod exercise test caused rod drops and reactor trip from 100% power.
3.	McGuire 2	84-026	1	Troubleshooting error made due to a procedure deficiency resulted in a rod drop and subsequent reactor trip from 100% power.
4.	Point Beach 1	87-001	17	Test lead incorrectly placed in preparation for testing - 22 rods dropped. This required a shutdown from a startup condition.
5.	Summer 1	87-024	5	Technician inadvertently de-energized 2 power supplies resulting in 12 dropped rods and a reactor trip from 100% power.
6.	Surry 1	86-003	14	Jumper came off and shorted the logic circuitry resulting in 4 dropped rods. This initiated a turbine runback and loss of rod movement capability.
7.	Wolf Creek 1	87-041	1	Fusible link disconnect switch on control rod movable gripper coil was "bumped" - resulted in a rod drop and reactor trip from 86% power.

Table B.3 Power and logic cabinet LERs

A. Fuse Failures

	Plant	LER #	Age at Time of Failure (Years)	Failure Description
1.	Braidwood 1	88-016	1	Two fuses blew which resulted in an urgent alarm. Subsequent trouble shooting caused a reactor trip.
2.	Byron 1	85-042	1	Degraded fuses caused four rods to drop which resulted in a reactor trip from 18% power.
3.	Byron 2	88-006	1	Degraded fuse in the power cabinets caused a rod drop. This resulted in a reactor trip from 94% power.
4.	Catawba 1	86-026	1	When replacing blown fuses a power transfer caused 10 rods to drop. A reactor trip from 44% power occurred.
5.	Connecticut Yankee	87-008	20	Blown fuse in stationary gripper power supply resulted in a rod drop and turbine runback from 98% to 93% power.
6.	Diablo Canyon 1	87-016	3	Fuse failure resulted in 4 rods inserting 1 step. Power was reduced until fuses could be replaced. (Fuse modification to be made.)
7.	North Anna 1	87-004	9	Blown fuse in the stationary coil circuit resulted in a rod drop and reactor trip from 67% power. All fuses to be replaced during the refueling outage.

B. Circuit Board Failures

	Plant	LER #	Age at Time of Failure (Years)	Failure Description
1.	Beaver Valley 1	85-011	10	Failure of the firing and regulation boards caused 4 rods to drop. The reactor was manually tripped from 1% power.
2.	Beaver Valley 2	87-013	11	The firing circuit board overheated which resulted in a rod drop and reactor trip from 33% power. A modification to improve area ventilation was initiated.
3.	Beaver Valley 2	88-009	1	A loss of rod movement occurred without an alarm due to a failed buffer card. Subsequent troubleshooting caused rods to drop. This resulted in a reactor trip from 100% power.
4.	Byron 1	86-028	1	A circuit board failure caused a rod control urgent failure rod drip, and manual Rx trip from 3% power.
5.	Callaway 1	85-048	1	A failed slave cycler card triggered a logic error and zero current demand to both the stationary and movable coils. Rods dropped and a reactor trip from 100% power occurred.
6.	Callaway 1	86-024	2	Overheating lead to a faulty slave cycler counter card. Design change to increase cooling was initiated.
7.	Callaway 1	86-029	2	Overheating caused a failed slave cycler card which led to reactor trip from 51% power.
8.	Diablo Canyon	86-007	1	Faulty logic module caused 2 rods to drop. A reactor trip from 100% power resulted.

B. Circuit Board Failures (Cont'd)

	Plant	LER #	Age at Time of Failure (Years)	Failure Description
9.	Ginna	85-017	16	Faulty firing circuit rod control system failed. This was found during post maintenance testing.
10.	North Anna 1	84-026	6	A failed firing card resulted in 4 rods dropping. This caused a reactor trip from 100% power.
11.	North Anna 1	85-017	7	Three faulty alarm cards resulted in dropped rods. A manual reactor trip from 16% power resulted.
12.	Salem 2	88-009	8	Circuit board failure caused a rod drop which led to a reactor trip from 97% power.
13.	Summer 1	85-001 (2 events)	3	Failures of a pulser oscillator circuit and erratic output of the supervisory memory circuit resulted in 2 separate shutdowns from 100% power due to tech spec requirements on movable control assemblies.
14.	Summer 1	85-011	3	A defective slave cycler counter card plus human error resulted in a rod drop and reactor trip from 100% power. The licensee established a PM Program for the Rod Control System Cabinets.
15.	Surry 2	85-014	12	Pulser card failure in logic cabinet. Alarm only.
16.	Surry 2	88-005	15	Manual power reduction due to failed circuit board which resulted in a control rod urgent alarm. An unusual event was declared.
17.	Wolf Creek 1	85-079	1	A faulty supervisory memory buffer card caused control rods to be immovable but not untrippable.

B. Circuit Board Failures (Cont'd)

	Plant	LER #	Age at Time of Failure (Years)	Failure Description
18.	Zion 1	84-027	11	Alarm card failure prevented rod motion (urgent alarm). A manual trip was initiated during startup since the reactor was on a positive period (increasing power).
19.	Zion 1	85-025	12	Alarm card failure resulted in the need for a manual reactor trip due to change in RCS temperature.

C. Power Supply Failures

1.	Beaver Valley 2	87-018	1	Power supply overvoltage limiter failed. Rod drops and reactor trip from 20% power occurred during subsequent maintenance.
2.	Braidwood 2	88-009	1	Power supplies failed on thermal overload. The high temperature was due to failure of the area ventilation system.
3.	Byron 1	85-068	1	Lightning surge caused the failure of power supplies; reactor trip from 11% power occurred.
4.	Byron 1	87-017	2	Lightning surge, failed power supplies; two reactor trips from 98% power occurred. Modification to grounding system being investigated.
5.	Farley 2	85-010	4	Lightning induced voltage surge tripped both the normal and redundant power supplies. A reactor trip from 99% power resulted. An unusual event was initiated because of other simultaneous problems.

C. Power Supply Failures (Cont'd)

	Plant	LER #	Age at Time of Failure (Years)	Failure Description
6.	McGuire 1	88-013	7	Auxiliary and primary power supply failures resulted in a rod drop and reactor trip from 100% power.
7.	Salem 1	86-001	10	Internal fault in a power supply caused loss of power to logic cards, rod drop and reactor trip from 100% power resulted.
8.	Turkey Point 4	86-016	12	24V dc supply failed which caused a rod drop a manual reactor trip was initiated during startup.
9.	Vogtle 1	88-025	1	Lightning surge caused failure of power supplies; a reactor trip from 16% power occurred. An evaluation of plant surge protection was initiated.

D. Discrete Components Identified

1.	Beaver Valley 2	87-012 (2 events)	1	Failed thyristor in movable gripper circuit board; rods dropped and manual reactor trips from low power were initiated.
2.	Callaway 1	86-026	1	Thyristor failed in a power supply causing a rod drop and reactor trip.
3.	Indian Point 2	88-009	15	Failed input transformer caused false rod positions.
4.	North Anna 1	86-018	8	Failed transformer on the firing card for lift coils caused loss of rod withdrawal capability during startup.
5.	Wolf Creek 1	87-017	2	Multiple degraded components; rod drop and reactor trip from 60% power resulted.

E. Wiring/Connections

	Plant	LER #	Age at Time of Failure (Years)	Failure Description
1.	Braidwood 1	87-032	1	Loose connections resulted in intermittent alarms; a manual Rx trip from 1% power was initiated.
2.	Byron 1	88-002	3	Loose connections in power cabinet caused rod drop and a reactor trip from 98% power.
3.	Callaway 1	85-034	1	Open circuit due to overheating in cabinet. Rods dropped and a reactor trip from 100% power occurred.
4.	Connecticut Yankee	88-004	21	Improper wiring was found in RPS and Rod Control System interface. This could have prevented fulfillment of a safety function.
5.	North Anna 2	86-005	6	Momentary open circuit (loose connection) on supply to stationary gripper coil. This caused a rod drop and reactor trip from 100% power.

Table B.4 CRDM LERs

	Plant	LER #	Age at Time of Failure (Years)	Failure Description
1.	Braidwood 1	87-015	1	Crud buildup in the latch area caused mis-stepping during rod withdrawal.
2.	Catawba 1	84-003	1	Locking mechanisms on 2 drives were defective. Required replacement during the refueling outage.
3.	Catawba 1	84-029	1	Fourteen unacceptable rods were found during an inspection. These were sent to Westinghouse for repair. (Problem with drive rod breech guide screws.)
4.	C	85-008	7	Control rod guide tube pin broke and found its way through the primary system to the steam generator. This occurred during a startup and was detected by the loose parts monitor.
5.	McGuire 2	84-032	1	Five of 53 breech guide screws did not meet the acceptance criteria. These were redrilled and repinned or replaced.
6.	McGuire 2	86-008	3	Small particle debris caused a stuck rod. A manual shutdown ensued during which the problem cleared.
7.	North Anna 2	84-002	4	A control rod stuck in the fully withdrawn position which resulted in the initiation of emergency boration. A manual trip from 2% power occurred.
8.	Point Beach 1	84-001	14	Three nuts were missing from the control rod guide tube split pins. Ultrasonic testing identified cracks in 67 of the 74 pins.

Table B.4 (Cont'd)

	Plant	LER #	Age at Time of Failure (Years)	Failure Description
9.	Turkey Point 4	85-021	12	A shorted stationary gripper coil caused a rod drop and reactor trip from 100% power.
10.	Turkey Point 4	86-002 (2 events)	13	A faulty stationary gripper coil caused turbine runbacks from 100% to 68% power and from 68% to 49% power.
11.	Surry 1	86-025	14	A failed stationary gripper coil caused a rod drop. The coil was replaced during a short outage.
12.	Yankee Rowe	87-003	27	A failed stationary gripper coil caused a reactor trip from 100% power. The coil stack was replaced.

Table B.5 LERs with failure cause not delineated

	Plant	LER #	Age at Time of Failure (Years)	Failure Description
1.	Byron 1	85-063	1	Reactor trip from 8% power.
2.	Indian Point 2	85-008	12	Inadvertent rod drop caused a flux tilt which required a power reduction to correct.
3.	Indian point 2	86-024	13	Rods dropped resulting in a reactor trip. Voltage from the MG set may have been low.
4.	Turkey Point 4	88-012	15	A rod drop caused a turbine runback from 100% to 60%. A strip recorder was connected to the circuitry to determine the cause.

Table B.6 Rod position indication LERs

	Plant	LER #	Age at Time of Failure (Years)	Failure Description
1.	Beaver Valley 1	85-017	9	Wiring interface problem between the process computer and RPIS caused false rod indication.
2.	Braidwood 1	87-013	1	Manual reactor trip during startup due to incorrect position indication.
3.	Braidwood 1	88-004	2	Detector/encoder card failure caused incorrect rod position during startup. A manual reactor trip was initiated.
4.	Byron 1	84-040	1	Sticking step counter - demand position and actual position differed by more than 12 steps.
5.	Byron 2	86-002	1	A detector/encoder card failed during startup. A manual reactor trip was initiated.
6.	Catawba 1	85-057	1	The rod position deviation monitor was inoperable due to an electronics failure.
7.	Catawba 1	87-016	2	During startup, the rod position indication failed on one rod. A manual reactor trip was initiated.
8.	Cook 2	84-018	6	Indicated position was greater than demand position. Shutdown from 3% power was necessary.
9.	Diablo Canyon 2	85-018	1	Digital rod position, indication failed. A manual trip from 20% power was initiated. An inadvertent safety injection actuation occurred.
10.	Ginna 1	84-011	15	A loose connection in a power supply caused the RPIS to be inoperable.

Table B.6 (Cont'd)

	Plant	LER #	Age at Time of Failure (Years)	Failure Description
11.	Ginna 1	84-016	16	A 13V dc power supply failure resulted in a rod position deviation alarm.
12.	Indian Point 2	84-003	1	A RPI channel drift condition required that a controlled shutdown from 100% power commence.
13.	Indian Point 2	86-039	13	Misalignment between actual position and demand.
14.	McGuire 1	84-015	3	A detector/encoder card failure resulted in the incorrect rod position being displayed. (Discovered during testing.)
15.	McGuire 2	84-006	1	Central control card of DRPI failed. Manual trip of reactor during startup.
16.	McGuire 2	85-021	2	DRPI encoder card failed. Manual trip of reactor during startup due to loss of rod position indication.
17.	McGuire 2	87-005	4	DRPI failed. Power reduction initiated until the circuit board was repaired.
18.	Millstone 3	88-007	2	Warped circuit board caused a poor connection which resulted in faulty position indication. A manual reactor trip during startup was initiated.
19.	Point Beach 2	86-002	14	The actual and demand rod positions were different due to a failure of the mechanical demand counter.

Table B.6 (Cont'd)

	Plant	LER #	Age at Time of Failure (Years)	Failure Description
20.	Salem 2	84-006	4	A power supply failure occurred which resulted in all rod position and indicators failing to zero, and all rod bottom lights coming on while the plant was at 100% power.
21.	Salem 2	85-010	5	During startup, the actual rod position differed by more than 12 steps from the indicated position. A manual shutdown was initiated.
22.	San Onofre 1	85-013	18	A spurious rod bottom light indication.
23.	San Onofre 1	87-013	20	Failure of two rod bottom lights to illuminate on a reactor shutdown.
24.	Sequoyah 1	85-009	5	A failure of the voltage regulator resulted in a change in indicated rod position of about 20 steps.
25.	Sequoyah 2	88-013	7	During startup, a failure in the demand step counter circuitry required that the reactor be manually shutdown.
26.	Surry 1	84-020	12	A rod bottom light failed during a reactor trip.
27.	Surry 1	85-019 (2 events)	13	Indicated rod position differed from the actual rod position by more than 12 steps.
28.	Surry 1	86-028	14	Failures of 2 power supplies resulted in the indicated change of rod position by more than 25 steps.
29.	Surry 1	87-015	15	Dirty contacts in a DC power supply resulted in a change in indication of 26 steps.

Table B.6 (Cont'd)

	Plant	LER #	Age at Time of Failure (Years)	Failure Description
30.	Surry 1	88-002 88-006 88-010 88-024 88-026	16 16 16 16 16	Indicated rod position was different than actual rod position by more than 12 steps "Generic Westinghouse concern" cited in LERs.
31.	Surry 2	86-009 86-019 86-003 86-007 86-012 86-016 86-020	13 14 16 16 16 16 16	Indicated rod position differed from the actual position by more than 12 steps.
32.	Turkey Point 3	85-044	13	Failure of the primary detector coil gave a false rod drop signal. This resulted in a turbine runback from 100% to 37% power.
33.	Turkey Point 4	86-021	13	A voltage regulator failed which resulted in a shutdown from 100% power due to spurious rod indications.
34.	Turkey Point 4	86-019	14	A turbine runback from 89% to 84% occurred due to a spike in the RPI system which was caused by a loose solder joint in a cable connector.
35.	Vogtle 1	87-038	1	A detector/encoder card failed making the DRPI system inoperable. A manual reactor trip was initiated (S/U).

APPENDIX C

INDUSTRY SURVEY OF CURRENT MAINTENANCE PRACTICES

NPAR Questionnaire - Magnetic Jack Control Rod Drive Systems

Westinghouse Pressurized Water Reactors

Background

This questionnaire requests information from utility engineers concerning maintenance and operating experience with Westinghouse magnetic jack control rod drive systems. Details on inspections and preventive maintenance, as well as repairs and modifications will assist the NRC Nuclear Plant Aging Research (NPAR) program. One goal of the program is to identify inspection and maintenance methods that assure detection of aging effects prior to loss of safety functions.

Questionnaire Organization

To facilitate completion, the questionnaire is divided into three main sections. The first section contains detailed questions about operating and maintenance experience and is divided into subsections by component locations, inside or outside of containment. The second section addresses general system tests. The third section contains general questions, and requests that information copies of various system descriptions and procedures accompany the completed questionnaire. Please note that any computer printouts that describe preventive or corrective maintenance or calibrations would also be appreciated to supplement responses in the questionnaire.

Table of Contents

I. CRD System Inspections, Maintenance and MOdifications

A. CRD System Components Inside Containment

1. Rod Control Cluster Assembly and Guide Tube
2. Latches and Drive Rod
3. Pressure Boundary Components
   a) Seal Welds
   b) Vent Valve
   c) Other Pressure Boundary Features

4. Coil Stack Assembly
   a) Coil Stack Components
   b) Coil Stack Forced Ventilation Cooling

5. Cables and Connectors
6. Rod Position Indicator System Coils and Wiring
7. Other

B. CRD System Components Outside Containment

1. Cables, Connectors and Terminations
2. Power Supplies
3. Control/Logic Cabinets
4. Other

II. CRD System Tests

A. Rod Position Verification Test
B. Rod Position Indicator Channel Functional Tests
C. Rod Drop Time Test
D. Other Tests

III. General

A. Rod Exercising
B. Reliability and Trend Analyses
C. Overall Ranking
D. Supporting Documents

NPAR Questionnaire

Plant Name: _____

Plant Contact: _____ Phone # _____

(Please circle Yes or No and provide additional information where appropriate. If additional space is required, please attach additional sheets or use back of form (ensure question is clearly identified).

What CRDM Model # is installed at your plant? _____

How many such CRDMs are installed at your plant? _____

How long has it been since these CRDMS were initially installed? _____

How much operating time has accumulated for these CRDMs (i.e., hours, months/years of operation)? _____

I. CRD System Inspections, Maintenance & Modifications

A. CRD System Components Inside Containment

1. Rod Control Cluster Assembly and Guide Tube

- Please briefly describe the full length RCCAs used in your plant (absorber material, structural material, unique design features)

- Please summarize any indications of unusual RCCA wear or crud buildup or any corrective maintenance related to RCCA travel (location on assembly, when)

- Please summarize any indications of Guide Tube wear, crud buildup, cracking or their damage and any corrective maintenance, modifications or replacements (location on tube, when)

2. Latches and Drive Rod

- Are inspections/preventive maintenance performed on:

  Latch Mechanisms (wear or crud buildup)? Yes No
  Frequency _____ Describe_____

  _____

  Drive rod (wear or crud buildup)? Yes No Frequency _____

  Describe _____

  _____

- Summarize corrective maintenance or replacements of latch components or drive rods (component, when, reason)_____

  _____

  _____

3. Pressure Boundary Components

a) Seal Welds

In responding to the following questions, please indicate which weld is affected:

1 - Latch housing-to-pressure vessel head
2 - Rod travel housing-to-latch housing

Are the following inspections performed on seal welds?

NDE? Yes No Frequency _____ Which _____

Description _____

_____

Hydrostatic? Yes No Frequency _____Which _____
Other? Which _____ Frequency _____ Describe_____

_____

_____

How many seal welds have been cut and rewelded_____ None
Frequency_____ Which _____ Reason _____

Has design of seal weld been modified? Yes No Which _____
When _____ Describe _____

_____

b) Vent Valve

Are valves opened and closed for any maintenance operations?
Yes No Frequency _____ Reason _____
_____

Are valves hydrostatically tested? Yes No Frequency _____

Has any vent valve leakage (or signs of leakage) been noted Yes No How Many?
Describe (severity, effects) _____
_____
_____

Summarize corrective maintenance or replacement of valves_____
_____
_____

Has the design of the vent valve been modified? Yes No When_____
Describe _____
_____
_____

c) Other Pressure Boundary Features

Please briefly discuss any other inspections, maintenance, replacements or modifications not addressed above.

_____
_____
_____
_____
_____

4. Coil Stack Assembly

a) Coil Stack Components

Are the following inspections or tests performed on the coils?

Physical inspections? Yes No Frequency_____
Features examined _____
_____
_____

Electrical tests? Yes No Frequency_____
Describe (test equipment, procedure) _____
_____

Summarize corrective maintenance or replacements of coils or assembly wiring (component, when, reason) _____

_____

_____

Has the coil stack assembly (or individual coil) design or operating parameters (e.g., voltage, current) been modified? Yes No When _____ Describe_____

_____

_____

b) Coil Stack Forced Ventilation Cooling

Is the forced ventilation cooling system performance monitored during operation?
Yes No Describe (parameters, frequency alarms)_____

_____

_____

Are inspections, tests or preventive maintenance performed on forced ventilation systems? Yes No Describe _____

_____

_____

_____

Has the forced ventilation system been modified? Yes No Describe (include effect on coil cooling) _____

_____

_____

Are measured coil stack assembly/coil temperatures available? Yes No
Location _____ Temperature _____ Measurement Method _____
Estimated coil stack temperature, if no measurements _____

Have there been any incidents of loss of the forced air cooling system? Yes No
Describe (# of incidents, duration, evaluation of CRDM effects) _____

_____

_____

5. Cables and Connectors

Are the following inspections/tests/preventive maintenance performed?

Insulation degradation or wear? Yes No Frequency _____
Describe (visual, electrical test?) _____

_____

_____

Connector pin condition (e.g., corrosion or looseness)? Yes No Frequency _____
Connector watertight seal? Yes No Frequency _____
Other? Yes No Describe _____

Summary corrective maintenance or replacements of cables or connectors (component, when, reasons) _____

If cables or connectors were replaced, please indicate manufacturer and model # of originals and replacements
original _____
replacement _____

Have cables or connectors been modified? Yes No Describe _____

What is the measured or estimated (please indicate which) head area ambient temperature? Temperature _____ Location _____

6. Rod Position Indicator System Coils and Wiring

Are the following inspections or tests performed?

Physical inspections? Yes No Frequency _____
Features examined _____

Electrical tests? Yes No Frequency _____
Describe test equipment, procedure) _____

Other? Yes No Describe _____

Summary corrective maintenance or replacements (component, when, reason) _____

Has the design of the RPI coils or wiring been modified? Yes No Describe ____

Have any unusual RPI drift or calibration problems been experienced? Yes No
Describe _____

7. Other

Please summarize any inspections/preventive maintenance of CRDM components inside containment that were not addressed above (component, frequency, description of activity) _____

Please summarize any modifications or corrective maintenance of CRDM components inside containment that were not addressed above (components, when, reason) _____

Please summarize any incidents which may have affected CRD system performance (e.g., spills, mechanical interactions, impacts, overheating) _____

B. CRD System Components Outside Containment

1. Cables, Connectors and Terminations

Inspection/Preventive Maintenance? Yes No Frequency _____ Describe ___

Summarize corrective maintenance performed (number, type of repair) _____

2. Power Supplies

Inspection/Periodic Component Testing/Preventive Maintenance?
Yes No Frequency _____
Describe _____

Monitored during operation? Yes No Describe _____

Summarize corrective maintenance performed (number/type of repair) _____

_____

_____

3. Control/Logic Cabinets (thyristors, circuit boards)

Inspection/periodic Component Testing/Preventive Maintenance?
Yes No Frequency _____ Describe (components, activity) _____

_____

_____

Monitor during operation? Yes No Describe _____

_____

_____

Summarize corrective maintenance performed (number/type of repair) _____

_____

_____

What is the average ambient temperature in the cabinets?
Estimated Measured Not Available Temperature _____
Location _____

Is the ambient temperature in cabinets monitored? Yes No Method _____

_____

Is the Rod Position Indication digital or analog? Digital Analog

4. Other

Please discuss briefly any inspection/periodic component testing/preventive maintenance of CRDM components outside containment that were not described above (component, frequency, description of activity) _____

_____

_____

Please discuss briefly any modifications to the portion of the original CRDM system located outside containment that were not discussed above _____

_____

_____

Please summarize other CRDM system parameters that are monitored during operation that were not discussed above _____

_____

_____

II. CRD System Tests

A. Rod Position Verification Test

Is this test required by the Technical Specifications? Yes No
Is this test performed? Yes No Frequency _____
What parameters are monitored? _____
_____
_____

B. Rod Position Indicator Channel Functional Tests

Are these tests required by the Technical Specifications? Yes No
Are these tests performed? Yes No Frequency _____
What parameters are monitored? _____
_____
_____

C. Rod Drop Time Test

Is this test required by the Technical Specifications? Yes No
Is this test performed? Yes No Frequency _____
What parameters are monitored? _____
_____
_____

D. Other Tests

Are any other system tests required or routinely performed that were to addressed above?
Yes No
Identify key parameters evaluated _____
_____
_____

III. General

A. Rod Exercising

During operation, are individual rods periodically exercised if they have not been moved in normal operation for some period? Yes No Frequency _____ Procedure ____
_____
_____

B. Reliability and Trend Analyses

Is a reliability or trend analysis program in place for the CRD system? Yes No
Identify key parameters evaluated _____

_____

_____

C. Overall Ranking

In your opinion, what three parameters monitored, inspections performed or tests conducted are most important to ensure operational readiness of the CRD system? _____

_____

_____

D. Supporting Documents

1. Please provide an information copy of the following to aid in understanding the operational and maintenance of the system (please indicate if a copy is attached):

   a. Calibration and functional test procedures for the rod position and rod drive control subsystems
      Attached? Yes No

   b. Rod drop time test procedure
      Attached? Yes No

   c. CRDM inspection procedure
      Attached? Yes No

   d. System description (to identify plant unique features, e.g., cooling system configuration)
      Attached? Yes No

2. Please attach any computer printouts that describe preventive maintenance practices and schedules, component calibration intervals, and/or corrective maintenance that has been performed, if possible.

3. Please add any information which may help in understanding the responses to this questionnaire, or which you feel is pertinent to the study of CRD system aging.

NRC FORM 335 (2-89) NRCM 1102, 3201, 3202

U.S. NUCLEAR REGULATORY COMMISSION

BIBLIOGRAPHIC DATA SHEET

(See instructions on the reverse)

1. REPORT NUMBER (Assigned by NRC, Add Vol., Supp., Rev., and Addendum Numbers, if any.)

NUREG/CR-5555
BNL-NUREG-52232

2. TITLE AND SUBTITLE

Aging Assessment of the Westinghouse PWR Control Rod Drive System

3. DATE REPORT PUBLISHED

MONTH	YEAR
March	1991

4. FIN OR GRANT NUMBER

A-3270

5. AUTHOR(S)

W. Gunther , K. Sullivan

6. TYPE OF REPORT

Formal

7. PERIOD COVERED *(Inclusive Dates)*

8. PERFORMING ORGANIZATION – NAME AND ADDRESS *(If NRC, provide Division, Office or Region, U.S. Nuclear Regulatory Commission, and mailing address; if contractor, provide name and mailing address.)*

Brookhaven National Laboratory
Upton, N.Y. 11973

9. SPONSORING ORGANIZATION – NAME AND ADDRESS *(If NRC, type "Same as above"; if contractor, provide NRC Division, Office or Region, U.S. Nuclear Regulatory Commission, and mailing address.)*

Division of Engineering
Office of Nuclear Regulatory Research
U.S. Nuclear Regulatory Commission
Washington, D.C. 20555

10. SUPPLEMENTARY NOTES

11. ABSTRACT *(200 words or less)*

A study of the effects of aging on the Westinghouse Control Rod Drive (CRD) System was performed as part of the Nuclear Plant Aging Research (NPAR) Program. The objectives of the NPAR Program are to provide a technical basis for identifying and evaluating the degradation caused by age in nuclear power plant systems, structures, and components. The information from this and other NPAR studies will be used to assess the impact of aging on plant safety and to develop effective mitigating actions.

The operating experience data were evaluated to identify predominant failure modes, causes, and effects. For this study, the CRD system boundary includes the power and logic cabinets associated with the manual control of rod movement, and the control rod mechanism itself. The aging-related degradation of the interconnecting cables and connectors and the rod position indicating system also were considered. The evaluation of the data, when coupled with an assessment of the materials of construction and the operating environment, leads to the conclusion that the Westinghouse CRD system is subject to degradation from aging, which could affect its intended safety function as a plant ages. The number of CRD system failures which have resulted in a reactor trip (challenge to the safety system) warrants a higher level of regulatory and industry attention.

12. KEY WORDS/DESCRIPTORS *(List words or phrases that will assist researchers in locating the report.)*

Control Rod Drives--Aging; PWR type reactors--Aging; PWR type reactors Reactor components; reactor components--aging; reactor safety; control rod drives--failures; failure mode analysis; thermal degradation; wear; system failure analysis; operation; data analysis; nuclear power plants--engineered safety systems; SRAM; US NRC; BNL, reactor components--failures; nuclear power plants; failures

13. AVAILABILITY STATEMENT

14. SECURITY CLASSIFICATION

(This Page)

Unclassified

(This Report)

Unclassified

15. NUMBER OF PAGES

16. PRICE

NRC FORM 335 (2-89)

THIS DOCUMENT WAS PRINTED USING RECYCLED PAPER.

UNITED STATES
NUCLEAR REGULATORY COMMISSION
WASHINGTON, D.C. 20555

OFFICIAL BUSINESS
PENALTY FOR PRIVATE USE, $300

SPECIAL FOURTH-CLASS RATE
POSTAGE & FEES PAID
USNRC

PERMIT No. G-67