NUREG/CR-5783
BNL-NUREG-52299

Aging Assessment of the Combustion Engineering and Babcock & Wilcox Control Rod Drives

Prepared by
E. Grove, W. Gunther

Brookhaven National Laboratory

Prepared for
U.S. Nuclear Regulatory Commission

AVAILABILITY NOTICE

Availability of Reference Materials Cited in NRC Publications

Most documents cited in NRC publications will be available from one of the following sources:

1. The NRC Public Document Room, 2120 L Street, NW., Lower Level, Washington, DC 20555

2. The Superintendent of Documents, U.S. Government Printing Office, P.O. Box 37082, Washington, DC 20013-7082

3. The National Technical Information Service, Springfield, VA 22161

Although the listing that follows represents the majority of documents cited in NRC publications, it is not intended to be exhaustive.

Referenced documents available for inspection and copying for a fee from the NRC Public Document Room include NRC correspondence and internal NRC memoranda; NRC bulletins, circulars, information notices, inspection and investigation notices; licensee event reports; vendor reports and correspondence; Commission papers; and applicant and licensee documents and correspondence.

The following documents in the NUREG series are available for purchase from the GPO Sales Program: formal NRC staff and contractor reports, NRC-sponsored conference proceedings, international agreement reports, grant publications, and NRC booklets and brochures. Also available are regulatory guides, NRC regulations in the *Code of Federal Regulations*, and *Nuclear Regulatory Commission Issuances*.

Documents available from the National Technical Information Service include NUREG-series reports and technical reports prepared by other Federal agencies and reports prepared by the Atomic Energy Commission, forerunner agency to the Nuclear Regulatory Commission.

Documents available from public and special technical libraries include all open literature items, such as books, journal articles, and transactions. *Federal Register* notices, Federal and State legislation, and congressional reports can usually be obtained from these libraries.

Documents such as theses, dissertations, foreign reports and translations, and non-NRC conference proceedings are available for purchase from the organization sponsoring the publication cited.

Single copies of NRC draft reports are available free, to the extent of supply, upon written request to the Office of Administration, Distribution and Mail Services Section, U.S. Nuclear Regulatory Commission, Washington, DC 20555.

Copies of industry codes and standards used in a substantive manner in the NRC regulatory process are maintained at the NRC Library, 7920 Norfolk Avenue, Bethesda, Maryland, for use by the public. Codes and standards are usually copyrighted and may be purchased from the originating organization or, if they are American National Standards, from the American National Standards Institute, 1430 Broadway, New York, NY 10018.

DISCLAIMER NOTICE

This report was prepared as an account of work sponsored by an agency of the United States Government. Neither the United States Government nor any agency thereof, or any of their employees, makes any warranty, expressed or implied, or assumes any legal liability of responsibility for any third party's use, or the results of such use, of any information, apparatus, product or process disclosed in this report, or represents that its use by such third party would not infringe privately owned rights.

NUREG/CR-5783
BNL-NUREG-52299
R9

Aging Assessment of the Combustion Engineering and Babcock & Wilcox Control Rod Drives

Manuscript Completed: December 1992
Date Published: January 1993

Prepared by
E. Grove, W. Gunther

S. K. Aggarwal, NRC Program Manager

Brookhaven National Laboratory
Upton, NY 11973

Prepared for
Division of Engineering
Office of Nuclear Regulatory Research
U.S. Nuclear Regulatory Commission
Washington, DC 20555
NRC FIN A3270

ABSTRACT

The effects of aging upon the Babcock & Wilcox (B&W) and Combustion Engineering (CE) control rod drive systems have been evaluated. For this study, the CRD system boundary included the control rod assemblies, guide tubes, control rod drive mechanism, control system components, rod position indication components, and cooling system. Detailed operation experience data for 1980 to 1990 was evaluated to identify the predominant failure modes, causes, and effects. The results of this evaluation, along with an assessment of component material and operating environment, lead to the conclusion that both the B&W and CE CRD systems are susceptible to age degradation. Failures of the CRD system have resulted in significant plant effects including power reductions, plant shutdowns, scrams, and ESF actuations.

Information on current plant system inspection and maintenance practices were obtained from two B&W plants, and four CE plants through an industry survey. The results of this survey indicate that some plants have modified the system, replaced components, and established preventive maintenance programs, some of which effectively address the aging issue, while others do not. The potential application of some advanced monitoring inspection techniques are discussed.

TABLE OF CONTENTS

	Page
ABSTRACT	iii
LIST OF FIGURES	x
LIST OF TABLES	xii
SUMMARY	xv
ACKNOWLEDGEMENTS	xix
1. INTRODUCTION	1-1
1.1 Background	1-1
1.2 Objectives	1-2
1.3 Analysis Methodology and Report Format	1-3
2. DESCRIPTION OF THE COMBUSTION ENGINEERING CONTROL ELEMENT DRIVE SYSTEM	2-1
2.1 Introduction	2-1
2.2 Control Element Assemblies	2-1
2.3 Control Element Drive Mechanisms	2-5
2.3.1 Magnetic Jack CEDM	2-7
2.3.2 Rack and Pinion CEDM	2-13
2.4 Control Element Assembly Rod Position Indication System	2-13
2.5 Control Element Drive Control System	2-16
2.5.1 System Operation	2-17
2.5.2 System Description	2-19
2.6 CEDM Cooling System	2-20
2.7 System 80	2-21
3. DESCRIPTION OF THE BABCOCK & WILCOX CONTROL ROD DRIVE SYSTEM	3-1
3.1 Introduction	3-1
3.2 Control Rod Assemblies	3-1
3.3 Control Rod Drive Mechanisms	3-6
3.3.1 Motor Tube	3-7
3.3.2 Closure Assembly	3-9
3.3.3 Motor Assembly	3-10
3.3.4 Rotor Assembly	3-11
3.3.5 Thermal Barrier	3-12
3.3.6 Leadscrew Assembly	3-13
3.3.7 Torque Tube and Torque Taker	3-13

TABLE OF CONTENTS (Cont'd)

Page

3.3.8 CRDM Operational Considerations 3-13

3.4 Control Rod Drive Control System 3-15
3.5 Rod Position Indication 3-20

3.5.1 Absolute Position Indication System 3-20
3.5.2 Relative Position Indication System 3-23

3.6 Control Rod Drive Mechanism Cooling System 3-23

4. OPERATING AND ENVIRONMENTAL STRESSES 4-1

4.1 System Operating Stresses 4-1
4.2 Environmental Stresses 4-2
4.3 Effect of Operating and Environmental Stresses on System Components 4-3
4.4 Aging Stressor Tables 4-8

5. USNRC AND INDUSTRIAL STUDIES 5-1

5.1 USNRC Information Notices 5-1

5.1.1 Information Notice No. 85-38 5-1
5.1.2 Information Notice No. 85-86 5-1
5.1.3 Information Notice No. 86-108 5-2
5.1.4 Information Notice No. 88-47 5-2

5.2 USNRC Research Programs 5-2

5.2.1 NUREG-0641 5-2
5.2.2 NUREG/CR-2410, 3602, 3950 5-4
5.2.3 NUREG/CR-4731 5-5
5.2.4 NUREG/CP-0091 5-7
5.2.5 USNRC SRP NUREG-0800 5-7
5.2.6 Draft NUREG-1299 5-8

5.3 Industrial Research 5-9

5.3.1 EPRI NP-3444 5-9
5.3.2 EPRI-4512 5-10
5.3.3 EPRI NP-5001 5-10
5.3.4 EPRI NP-6232 5-12

5.4 Summary 5-12

TABLE OF CONTENTS (Cont'd)

Page

6. OPERATIONAL EXPERIENCE (1980-1990) 6-1

6.1 Introduction 6-1
6.2 Failures Due to Aging 6-2
6.3 Significant Plant Effects 6-4
6.4 Sub-System Failures, Causes, and Effects 6-5

6.4.1 Cables and Connectors 6-5
6.4.2 Control Rod Drive Control System Failures 6-7
6.4.3 Control Rod Drive Mechanism Failures 6-9

6.4.3.1 Primary Coolant Leakage 6-9
6.4.3.2 Stator Failures 6-12
6.4.3.3 Inoperable CRDMs 6-13

6.4.4 Rod Position Indication Failures 6-14
6.4.5 Human Error 6-16
6.4.6 Unknown Failure Cause 6-17
6.4.7 Miscellaneous Failures 6-17

6.5 Summary 6-19

7. EFFECT OF COMPONENT FAILURES ON CRD SYSTEM 7-1

7.1 Control Rod Assemblies (B&W and CE) 7-1
7.2 Control Rod Drive Mechanisms 7-3

7.2.1 B&W Control Rod Drive Mechanism 7-3
7.2.2 Combustion Engineering Control Element Drive Mechanisms 7-3
7.3 Control Rod Drive Control Systems 7-3

7.3.1 Babcock & Wilcox CRDM Control System 7-3
7.3.2 Combustion Engineering Control Rod Drive Control System 7-10

7.4 Rod Position Indication 7-13

7.4.1 B&W Rod Position Indication 7-13
7.4.2 CE Rod Position Indication 7-13

7.5 Control Rod Drive Cooling System (B&W and CE) 7-21
7.6 PRA Insights 7-21

7.6.1 Calvert Cliffs 1 (CE) 7-21
7.6.2 Arkansas 1 (B&W) 7-21
7.6.3 Oconee 3 (B&W) 7-22

TABLE OF CONTENTS (Cont'd)

Page

7.6.4 Crystal River 3 (B&W) 7-22
7.6.5 Conclusions 7-22

8. CRD INSPECTION, SURVEILLANCE, MONITORING AND MAINTENANCE REVIEW 8-1

8.1 Babcock and Wilcox Plants 8-1

8.1.1 Preventive Maintenance and Inspection Practices 8-3

8.2 Combustion Engineering Plants 8-8

8.2.1 Preventive Maintenance and Inspection Practices 8-11
8.2.2 CED System Tests 8-17
8.2.3 General 8-17

8.3 Summary of Survey Results (B&W and CE) 8-18

8.3.1 Cable Integrity 8-18
8.3.2 CRDM Operation 8-18
8.3.3 Primary Coolant Leakage 8-18
8.3.4 In-Service Inspection 8-19
8.3.5 Power and Control 8-19
8.3.6 Reliability Data Bases 8-20

9. CONCLUSIONS AND RECOMMENDATIONS 9-1

9.1 Conclusions 9-1

9.1.1 Combustion Engineering 9-1
9.1.2 Babcock & Wilcox 9-2

9.2 Recommendations 9-3

9.2.1 General Recommendations 9-3
9.2.2 Combustion Engineering 9-3
9.2.3 Babcock & Wilcox 9-4
9.2.4 Advanced Monitoring Techniques 9-4

10. REFERENCES 10-1

TABLE OF CONTENTS (Cont'd)

Page

APPENDICES

A Summary of Licensee Event Reports for Combustion Engineering Control Element Drive System A-1

B Summary of Licensee Event Reports for Babcock & Wilcox Control Rod Drive System B-1

C Industry Survey of Current CEDM Operating Experience, Inspection, and Maintenance Practices C-1

D Industry Survey of Current CRDM Operating Experience, Inspection, and Maintenance Practices D-1

LIST OF FIGURES

		Page
1.1	CE NPAR System Boundary	1-4
1.2	B&W NPAR System Boundary	1-5
2.1	Combustion Engineering Full Length Control Element Assembly	2-2
2.2	Combustion Engineering Magnetic Jack Control Element Drive Mechanism	2-6
2.3	CEA Motor Housing Assembly	2-8
2.4	Motor Assembly	2-9
2.5	Upper Pressure Housing	2-10
2.6	Extension Shaft Assembly	2-11
2.7	Gripper and CEA Spider Hub	2-12
2.8	Combustion Engineering Rack and Pinion CEDM	2-14
2.9	Combustion Engineering Reed Switch Position Transmitters	2-15
2.10	Combustion Engineering Reed Switch Position Transmitter (RSPT) Typical Circuit	2-16
2.11	Typical Pre-System 80 with ACTM Upgrade and Interfaces	2-18
2.12	Combustion Engineering Typical Power Switch	2-20
3.1	Babcock & Wilcox Control Rod Assembly	3-5
3.2	Control Rod Drive Mechanism	3-7
3.3	CRDM Rotor Assembly and Leadscrew	3-8
3.4	CRDM Vent Valve Assembly and Closure Parts	3-8
3.5	Venting Tool	3-9
3.6	Stator Water Jacket Assembly	3-10
3.7	Partial Section Showing Roller Nuts Engaged	3-11
3.8	Leadscrew Guide Assembly	3-12
3.9	Torque Tube Assembly	3-14
3.10	Minimum Allowable RC Pressure vs. Temperature for Tripping or Operating CRD	3-15
3.11	Control Rod Drive Control System Power Diagram	3-16
3.12	Rotating Magnetic Field	3-18
3.13	Control Rod Drive Regulating Power Supply Programmer	3-19
3.14	Reed Switches	3-21
3.15	Absolute Position Indication (API)	3-22
3.16	Relative Position Indication	3-24
5.1	Combustion Engineering Guide Tube Sleeve	5-3
6.1	CRD Sub-systems Database Comparison	6-3
6.2	Percentage of Component Failures Attributable to Aging	6-3
6.3	Significant Plant Effects Resulting From CRD System Degradation	6-4
6.4	Cables and Connectors Failure Cause	6-6
6.5	Cables and Connectors Failure Effect	6-6
6.6	CRD Control System Failure Causes	6-8
6.7	CRD Control System Failure Effect	6-8
6.8	Control Rod Drive Mechanisms Failure Cause	6-10
6.9	Inspection Area for Boric Acid Deposits (B&W Plants)	6-11
6.10	B&W CRDM Vent Valve	6-12

LIST OF FIGURES (Cont'd)

		Page
6.11	Control Rod Drive Mechanism Failure Effect	6-13
6.12	Rod Position Indication System Failure Cause	6-15
6.13	Rod Position Indication System Failure Effect	6-15
6.14	CE Control Element Drive System Unknown Failures Effect	6-16
6.15	B&W Control Rod Drive System Source of Loose Parts	6-18
8.1	CRDM Flexible Hose and Quick Disconnect Couplings	8-4
8.2	CE Coil Current Trace	8-13

LIST OF TABLES

		Page
1.1	Combustion Engineering Plants in NPAR Study	1-2
1.2	Babcock & Wilcox Plant in NPAR Study	1-2
1.3	CRD Primary Sub-systems	1-3
2.1	Primary Functions of Major CEDM Sub-Systems	2-3
2.2	CEA and CEDM Plant Data	2-5
2.3	Control Element Design Data	2-7
2.4	Magnetic Jack Type CEDM	2-8
2.5	Combustion Engineering Control Element Drive Control Systems	2-17
3.1	Primary Functions of Major CRDM Sub-Systems	3-2
3.2	CRA and CRDM Plant Data	3-4
3.3	Control Rod Assembly Data	3-4
3.4	Axial Power Shaping Rod Assembly Data	3-6
3.5	CRA Grouping by Plant	3-17
4.1	Babcock & Wilcox Control Rod Drive System Potential Degradation Mechanisms and Failure Modes	4-4
4.2	Combustion Engineering Control Element Drive System Potential Degradation Mechanisms and Failure Modes	4-5
4.3	Babcock & Wilcox CRD System Stress Summary	4-9
4.4	Combustion Engineering CED System Stress Summary	4-10
5.1	Events Involving Hold Down Springs	5-4
5.2	Cause of Events Involving Control Rod Drive Mechanisms	5-5
5.3	Summary of PWR CRDM Degradation Processes	5-6
5.4	Results of CEDM Wear Tests	5-9
5.5	Cobalt Release from CEDMs by Plant	5-10
5.6	Control Rod Drive Failure Statistics	5-11
5.7	Summary of Combustion Engineering Control Element Drive Aging Analyzed by NRC and Industry	5-13
5.8	Summary of Babcock & Wilcox Control Rod Drive Aging Analyzed by NRC and Industry	5-14
7.1	FMEA-Babcock & Wilcox and Combustion Engineering Control Rod Assemblies	7-2
7.2	FMEA-Babcock & Wilcox Control Rod Drive Mechanisms	7-4
7.3	FMEA-Combustion Engineering Control Element Drive Mechanisms	7-6
7.4	FMEA-Babcock & Wilcox CRD Control System	7-8
7.5	FMEA-Combustion Engineering CRD Control System	7-11

LIST OF TABLES (Cont'd)

		Page
7.6	FMEA-Babcock & Wilcox Absolute Position Indication System	7-14
7.7	FMEA-Babcock & Wilcox Relative Rod Position Indication System	7-16
7.8	FMEA-Combustion Engineering Reed Switch Position Indication System	7-18
7.9	FMEA-Combustion Engineering Pulse Counting Position Indication System	7-20
8.1	Babcock & Wilcox System and Component Description	8-1
8.2	Major Sub-system Modifications - B&W Plants	8-3
8.3	Summary of Preventive Maintenance and Inspection Practices - B&W Plants	8-5
8.4	B&W Recommended Annual Stator Preventive Maintenance	8-7
8.5	Combustion Engineering System and Component Description	8-9
8.6	CED System Design Changes and Modifications	8-12
8.7	CE Recommended Annual CEDM Preventive Maintenance	8-13
8.8	Summary of CE Plant Preventive Maintenance and Inspection Practices	8-15
A-1	CE Cable and Connector LERs	A-2
A-2	CE Control System LERs	A-2
A-2.1	Control Element Drive System (CEDS)	A-3
A-2.2	Control Element Drive Mechanism Control System (CEDMCS)	A-5
A-3	CEDM LERs	A-6
A-4	CE Rod Position LERs	A-8
A-5	Human Error LERs	A-11
A-6	Unknown Cause	A-13
A-7	Miscellaneous LERs	A-15
B-1	B&W Cable and Connector LERs	B-2
B-2	B&W CRD Control System LERs	B-3
B-3	CRDM LERs	B-4
B-4	Rod Position Indication LERs	B-5
B-5	Human Error LERs	B-6
B-6	Potential Loose Parts LERs	B-7
B-7	Unknown Cause	B-8

SUMMARY

The Babcock & Wilcox (B&W) and Combustion Engineering (CE) control rod drive (CRD) systems consist of mechanical and electrical components that position the control rod assemblies in the core in response to automatic or manual reactivity control signals. Both systems are designed to allow rapid gravity insertion of the control rods upon removal of the ac power which holds the rods. This study examines the design, materials, maintenance, and operation of the system to assess the potential for age degradation.

The boundaries for this CRD system study included the control system, rod position indication system, control rod drive mechanisms, and the control rod drive cooling systems. The fuel assembly guide tubes,the upper internal support structures, and the control rods were also included since failure of these components could also preclude rod insertion.

Both the CE and B&W control rod drive mechanisms are flange mounted on top of the reactor vessel head. B&W plants use a roller nut/leadscrew design, while the majority of CE plants use the magnetic jack design. Externally mounted stator coils provide the magnetic field which activates the roller nuts or magnetic latches resulting in control rod movement. Two CE plants, Palisades and Fort Calhoun, use the rack and pinion mechanism, in lieu of the magnetic jack type, which uses an electric motor to drive the rack and pinion mechanisms. Both mechanisms uses similar magnetically actuated reed switches to indicate the actual position of the rod. The CRDM stators for B&W are water cooled, while CE uses a forced air cooling system.

A detailed operating experience review of three commercially available databases (Licensee Event Report Database, Nuclear Plant Reliability Data System, and Nuclear Power Experience), together with NRC and industry research highlighted age related component degradations and failures which significantly affected plant operations. These effects included power reductions, reactor shutdowns and scrams, and Engineered Safety Feature actuation. Neither the B&W nor the CE CRD systems ever failed to allow for gravity insertion of the control rods. However these component failures and degradations resulted in increased component stresses and unnecessary thermal and pressure cycles which challenged the other plant systems.

The majority of failures of the CE control element drive system were caused by the degradation of the control system (61%). Failures of the control rod drive mechanisms accounted for 60% of reported failures of the B&W control rod drive system. Aging was the direct failure cause for 40% of the CE power and control system and 55% of the B&W control rod drive mechanism.

The following main failures were highlighted by this operational experience review:

1. Primary coolant leakage resulting from aged flexitallic gaskets (B&W), leaking vent valves (B&W and CE), degraded rotating seals (CE), and pressure housing cracks (CE). These occurrences resulted in component degradation due to the corrosive nature of the boric acid contained in the primary coolant. B&W has upgraded their flexitallic and vent valve designs in response to these failures.

2. Failures of the CRD control system resulting in dropped control rod assemblies, primarily due to power supply failures, sluggish gripper operation, and other electronic component failures (diodes, SCRs, breakers). The CRD systems at five CE plants have been upgraded (four totally, one partially) to incorporate microprocessors and current

sensors which monitor CRDM mechanical actuation in order to control voltage/current sequencing during rod movement. These upgrades also monitor for abnormal current levels and take corrective action. All CE utilities have redundant logic power supplies for the CRD system. The microprocessor upgrade have eliminated the rod drops attributed to sluggish gripper operation.

3. Erroneous rod position indication signals have been generated, primarily due to reed switch failures. Both CE and B&W have improved their systems to permit continued operation with some failed reed switches, while B&W has also upgraded the reed switch design.

4. Degraded electrical cables and connections resulted in inoperable control rods. Electrical cable aging, primarily due to environmental degradation, was observed at several plants.

5. Human errors and inadequate system maintenance resulted in dropped rods, power reductions, reactor shutdowns and ESF actuation.

6. Loose parts in the reactor core were reported, representing a significant hazard to the insertion of the control rods. The loose parts resulted from the deterioration of internal core components and handling equipment.

The review of the failures also indicated that a significant amount of reported failures which either had an unknown or no failure cause defined. This omission represents a lack of proper analysis of root failure cause and has resulted in similar, repeat failures which might have been prevented if the actual failure cause was determined.

The operating and environmental stresses for the system, and the potential aging effects from continued exposure to these stresses were evaluated for the major system components. Detailed Failure Mode and Effects Analysis were performed for the subsystems. The relative potential of each failure cause being the result of aging was also assessed. The results obtained closely coincide with the results seen from the operating experience review.

A survey was made of the surveillance, inspection, monitoring, and maintenance practices of utilities. Responses were received from two B&W plants, and four CE plants (representing eight units). The results from this survey, when compared to the operating experience review, highlighted several areas which indicate the need for increased attention:

1. Operating utilities need to establish a reliability program which includes accessing one (or more) of the operating experience databases. A more efficient predictive maintenance program would result in data which would alert utility personnel to failures at other plants, and allow corrective action to be taken before the component failed.

2. A more aggressive program to identify primary coolant leakage should be established. Components which have demonstrated a susceptibility to failure which may result in leakage (seals, gaskets) should be inspected and replaced on a scheduled basis prior to failure.

3. The current ISI program applicable to CRDMs requires that only 10% of the peripheral housings be inspected every ten years. With the continued instances of CRDM housing defects and failures, modification of this requirement should be considered to also include interior mechanisms.

4. Commercial advanced system monitoring and inspection techniques capable of detecting and trending time related age degradation should be evaluated for use with the CRD system. These techniques include infrared thermography for electronic components, motor current signature analysis to detect proper CRDM operation, and Electronic Characterization and Diagnostics (ECAD) as a possible alternative to meggering for assessing electrical integrity.

The results of this NPAR study show that aging degradation and failures have occurred in both B&W and CE Control Rod Drive Systems. These occurrences have not prevented the gravity insertion of the control rods. However, CRD failures have resulted challenges to other plant safety systems. As the survey of utility practices indicates, control rod drive aging has been recognized and is being addressed, to varying degrees, by the utilities' inspection and maintenance programs. However, aging degradation and failures are still occurring. The results of this study highlight these areas, and provide recommendations on preventive and predictive maintenance which may reduce aging failures.

ACKNOWLEDGEMENTS

The authors wish to acknowledge the technical direction of the NRC Program Manager, Mr. Satish K. Aggarwal. We also would like to express our appreciation to Dr. George Sliter of EPRI and Mr. Russ Bell of NUMARC for their assistance in obtaining plant responses to the operating experience questionnaire.

We would like to express our gratitude to various members of the Engineering Technology Division of BNL, including Mr. Robert Hall, Mr. John Taylor, Dr. Mano Subudhi, Mr. James Higgins, Dr. See-Meng Wong, and Mr. Kenneth Sullivan for providing technical assistance, guidance, and for reviewing this report. We also especially appreciate the efforts of Mr. J. H. Taylor of B&W, Mr. H. Windsor, and Mr. D. Matteson of ABB-CE, and Mr. H. Wilson of GPU, and staff for their time, assistance, and interest in this effort.

Finally, we wish to thank Mrs. Sonja Santos for her help in the data presentation, and Ms. Patricia Ennis for her patience and excellent preparation of this manuscript. We also acknowledge the Nuclear Safety Library Staff at BNL for their assistance in obtaining the support documentation for this report.

1. INTRODUCTION

Control rod drive mechanisms and control rod assemblies are essential to the safe and reliable operation of nuclear power plants. The individual control rods contain neutron absorbing material (poison) to control fast reactivity transients and to produce a rapid reactor shutdown (scram) upon demand. Control rod drive control systems and drive mechanisms provide for the insertion or withdrawal of the control rods from the reactor core, including control of sufficient holding power to maintain the control rods stationary during reactor operation.

Failure or degradation of these components, due to aging, may significantly affect plant operation (scrams, power reductions, dropped rods). Any failure which prevents or obstructs the rapid insertion of the control rods into the core upon demand represents a significant increase in plant risk.

An aging assessment has been performed for Combustion Engineering (CE) and Babcock & Wilcox (B&W) control rod drive mechanisms and associated sub-systems. The results of this Phase I assessment are described in the following sections of this NUREG. This program was performed under the United States Nuclear Regulatory Commissions' (NRC) Nuclear Plant Aging Research (NPAR) Program.

1.1 Background

Both Combustion Engineering (CE) and Babcock & Wilcox (B&W) control rod drives are electro-mechanical devices which are flange mounted on top of the reactor pressure vessel head. The CE Control Element Drive Mechanisms (CEDM) use magnetically actuated latches which engage a notched drive shaft to position or hold the attached Control Element Assembly (CEA). In lieu of this design, two CE plants use a rack and pinion CEDM to perform the same functions. The B&W Control Rod Drive Mechanism (CRDM) uses a magnetically actuated, rotating roller nut assembly which engages a threaded leadscrew to position or hold the attached Control Rod Assembly (CRA). All three designs are fail safe since the removal or loss of electrical power will cause the latches (CE), pinion (CE), or the roller nuts (B&W) to disengage, allowing the CRA or CEA to insert freely into the core under the influence of gravity.*

Fifteen plants use the control element drive systems designed by Combustion Engineering (Table 1.1). The years of operation vary from the newest plant, Palo Verde 3 with 4 years, to Palisades with 20 years. All CE plants except two (Palisades and Fort Calhoun) use the magnetic jack type of CEDM. The total number of CEDMs per plant is a function of reactor size and the number of CEAs, varying from 37 to 91.

Eight B&W plants (Table 1.2) use the roller nut CRDM. Though B&W has fewer plants than CE, the plants are older, varying from Davis-Besse with 14 years of operation to Oconee 1 with 18 years. Typically, B&W plants use 61 CRDMs.

---

*For brevity, the general term Control Rod Assembly (CRA) and Control Rod Drive Mechanism (CRDM) will be used in this report to refer to both B&W and CE designs when discussion is equally applicable to both designs. When specifically applicable to CE, the terms Control Element Assembly (CEA) and Control Element Drive Mechanism (CEDM) will be used.

Table 1.1 Combustion Engineering Plants in NPAR Study

Years of Operation				
<5	5-10	10-15	15-20	>20
Palo Verde 3	Palo Verde 1	Arkansas 2	Calvert Cliffs 1	Palisades
	Palo Verde 2	St. Lucie 1	Calvert Cliffs 2	
	San Onofre 2		Fort Calhoun	
	San Onofre 3		Maine Yankee	
	St. Lucie 2		Millstone 2	
	Waterford 3			

Table 1.2 Babcock & Wilcox Plants in NPAR Study

Years of Operation	
10-15	15-20
Crystal River	Arkansas 1
Davis Besse	Oconee 1
	Oconee 2
	Oconee 3
	Rancho Seco
	Three Mile Island 1

1.2 Objectives

As reactor years of operation increased, a need developed to assess the effects of plant aging on safety. The Director of the Office of Nuclear Reactor Regulation of the U.S. Nuclear Regulatory Commission (NRC) identified this need, and the Nuclear Plant Aging Research (NPAR) Program was developed by the Office of Nuclear Regulatory Research to assess this. The technical and safety issues of the Program, components and systems to be evaluated, and potential uses of the results, are described in NUREG-1144.[1]

The objectives of this Phase I system study are described in NUREG 1144 and the BNL Aging and Life Extension Assessment Program (ALEAP) Systems Level Plan.[2] Specifically, these objectives are to perform the following:

- a detailed evaluation of operating experience data,
- an analysis of industry operating and maintenance information,
- an identification of failure modes, causes, and effects, and
- a review of design, operating environment, and performance requirements.

To meet these objectives, which are similar to the Westinghouse CRD aging study completed by BNL,[3] the following tasks were completed for both the B&W and CE CRD systems:

A. The operating experience was reviewed to identify the dominant component failure modes, effects, and mechanisms.

B. A Failure Modes and Effects Analysis (FMEA) for each main sub-system was completed to identify the components which affect the functions of the system.

C. A survey of Babcock & Wilcox and Combustion Engineering utilities was performed to obtain current maintenance, inspection, and surveillance practices. Meetings were held with B&W and CE to assess the recommended maintenance and operating restrictions.

1.3 Analysis Methodology and Report Format

Reactivity control for CE and B&W reactors is provided by two independent systems. This function is accomplished by the Chemical and Volume Control System (CVCS) and the Control Element Drive System (CEDS) in CE reactors, and the Makeup and Purification System and Control Rod Drive System (CRDS) in B&W reactors.

Both the CVCS and the Makeup and Purification System compensate for long-term reactivity effects due to coolant temperature changes, xenon concentration, and fuel burnup by controlling the amount of soluble boron in the reactor coolant. Although important to reactivity control, these systems are not included in the scope of this study.

The CEDS and CRDS position the movable control rod assemblies within the core to control the short term reactivity effects. Each system is capable of producing a reactor shutdown through the rapid, gravity insertion of the control rods. Both the CEDS and CRDS are comprised of five similar, primary sub-systems (Table 1.3). These five sub-systems encompass the CE and B&W system boundaries used for this aging study, as shown in Figures 1.1 and 1.2, respectively.

Table 1.3 CRD Primary Sub-systems

Combustion Engineering Control Element Drive System		Babcock & Wilcox Control Rod Drive System	
I.	a. Control Element Assemblies (CEA) b. Fuel Assembly Guide Tubes c. Upper Guide Structure	I.	a. Control Rod Assemblies (CRA) b. Fuel Assembly Guide Tubes c. Upper Internal Guide
II.	Control Element Drive Mechanism (CEDM)	II.	Control Rod Drive Mechanism (CRDM)
III.	Control Element Drive Control System	III.	Control Rod Drive Control System
IV.	Control Element Assembly Position Indication	IV.	Control Rod Assembly Position Indication
V.	Control Element Drive Mechanism Cooling System	V.	Control Rod Drive Mechanism Cooling System

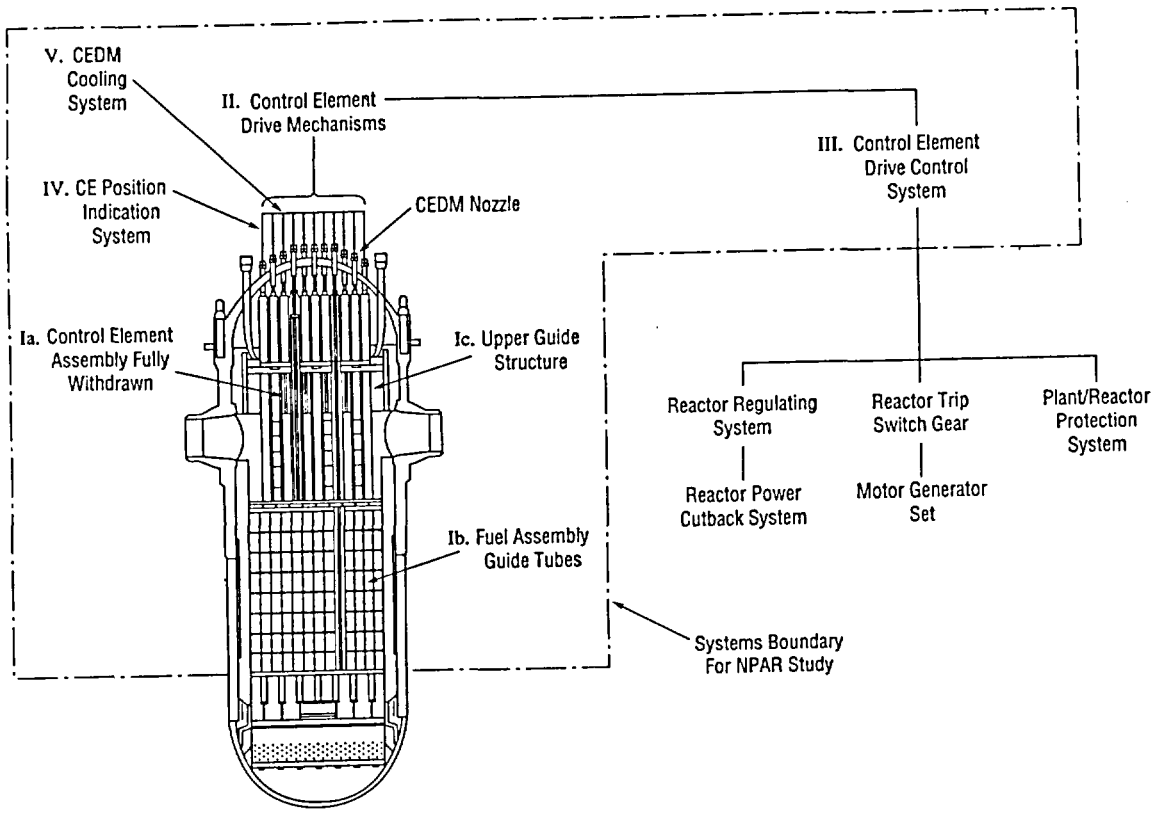

Figure 1.1 CE NPAR System Boundary

The Reactor Protection System (RPS), including the reactor trip breakers, are essential to plant safety. Reactor trip signals from the RPS cause the breakers to open, removing power from the drive mechanisms, allowing the control rod assemblies to rapidly insert into the core under the influence of gravity. This vital system has been addressed in a separate NPAR study.[44]

To fully understand the effect of system aging, specific information on operating characteristics, material and design function is presented in Section 2.0 for CE and Section 3.0 for B&W. This information was obtained from a review of the utilities' Final Safety Analysis Reports, technical reports and system descriptions.

Section 4.0 evaluates the operational and environmental impacts of the stresses on the system and its components. The effect of required testing is considered, along with obvious stresses including mechanical wear, vibration, and electrical stresses. The dominant stresses which affect the primary components of the system are also presented.

Both the B&W and CE control rod drive systems have been the subject of industry, EPRI, and NRC studies. Section 5.0 summarizes this work including the four Information Notices generated in response to significant system and component operating failures.

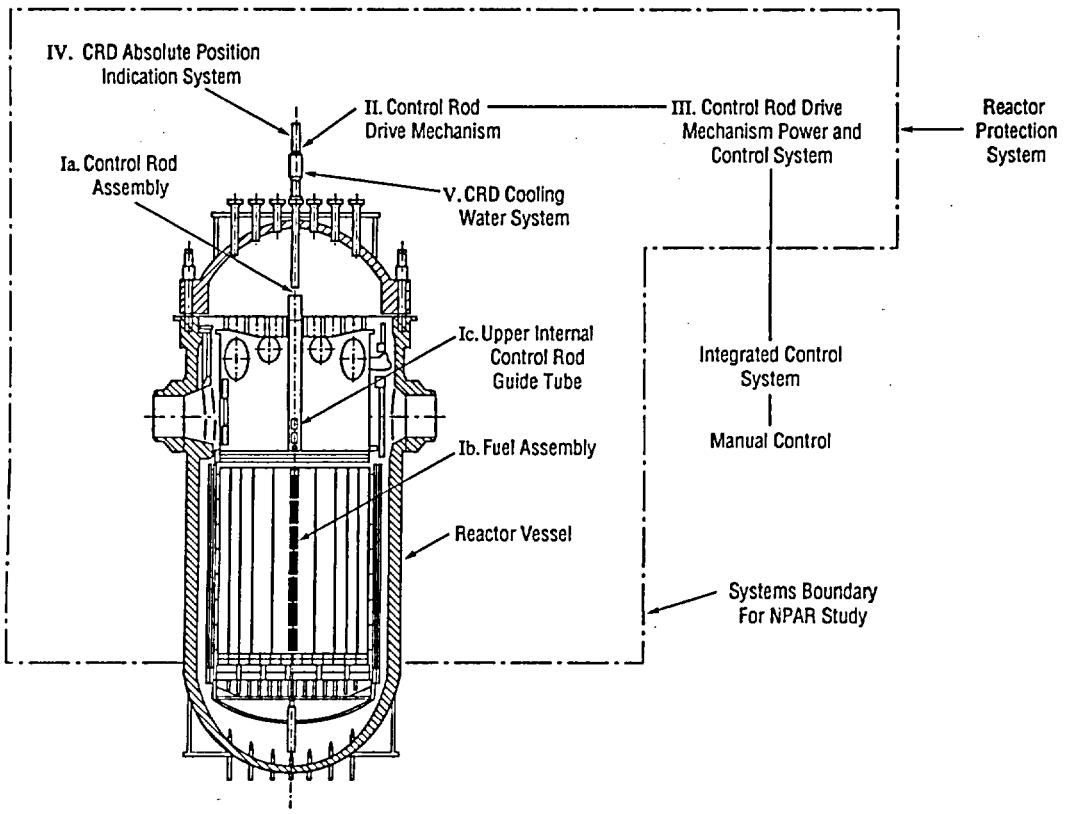

Figure 1.2 B&W NPAR System Boundary

Operating experience for each design, for 1980-1990, is presented in Section 6.0. The information used to evaluate the operating experience was obtained from a variety of sources, including:

- Nuclear Plant Reliability Data System (NPRDS)
- Licensee Event Reports (LERs)
- Nuclear Plant Experience (NPE)
- Plant Specific Failure Data
- Operating Plant Surveys
- Meetings with B&W and CE System Engineers

This section discusses the primary failure causes and effects for the main system components. The percentage of failures directly attributed to aging degradation is also presented. Summaries of the individual LERs are given in Appendix A and B. The systems' susceptibility to human error and improper maintenance is also evaluated.

The results of the detailed design, operating stressors, previous studies on this subject, and operating experience reviews are combined into a failure mode and effects analysis for the primary CRD subsystems (Section 7.0). Each individual FMEA summarizes the main component failures which result in system or plant effects. The aging potential for each failure cause is evaluated. Based upon plant

operating experience and engineering judgement, the probability of occurrence for each failure is qualitatively assessed.

Section 8.0 presents the responses of operating utilities to the BNL industry survey performed with the assistance of EPRI and NUMARC. Information on system operating experience, inspection, surveillance, and maintenance practices is presented. The effectiveness of each in mitigating the effects of aging (discussed in Section 7.0), is assessed and the benefits of advanced monitoring techniques is presented.

In Section 9.0, the results and conclusions of this Phase I aging assessment are presented.

2. DESCRIPTION OF THE COMBUSTION ENGINEERING CONTROL ELEMENT DRIVE SYSTEM

2.1 Introduction

The Combustion Engineering control element drive system is comprised of five main sub-systems as shown in Figure 1.1. These specific sub-systems include:

I. *Control Element Assemblies (CEAs):* Each CEA consists of individual absorber rods connected to a common hub and positioned by fuel assembly guide tubes when inserted in a fuel assembly. The upper guide structure maintains CEA spacing when withdrawn from the fuel assembly into the upper plenum region.

II. *Control Element Drive Mechanisms (CEDMs):* Electro-mechanical devices, which in response to automatic or manual control signals, inserts, withdraws or holds the CEAs stationary in the reactor core.

III. *Control Element Drive Control System:* Provides electrical signals to either hold the CEAs stationary in the core, or reposition them, to control reactivity during reactor operation.

IV. *Control Element Assembly Rod Position Indication System:* Actual CEA position is monitored by magnetically operated reed switches. The plant computer monitors and counts the pulses supplied to CEDM coils to provide a indirect (demanded) rod position.

V. *CEDM Cooling System:* A forced air cooling system which maintains the CEDM coil stack assembly below 350°F.

Table 2.1 summarizes the main components and primary functions for each of the five sub-systems.

2.2 Control Element Assemblies (CEA)

The Control Element Assemblies consist of four, five, or twelve neutron absorber element rods connected to a spider assembly. The spider assembly (Figure 2.1) geometrically arranges the rods to ensure engagement with the fuel assembly guide tubes and is coupled to the CEDM drive shaft. Depending upon specific core design requirements, both full length and part length absorber rods are used as shown in Table 2.2. The physical dimensions of these two rod types are similar, with the exception of the poison column length. Table 2.3 summarizes the design data for both of these rods.

The total number of fuel assemblies in the reactor core depends upon plant size, varying from 133 to the new System-80 plants with 241 assemblies. Each fuel assembly consists of fuel rods and Zircaloy-4 guide tubes arranged in a square lattice. The lower ends of the four outer guide tubes are tapered gradually to form a region of reduced diameter, which in conjunction with the absorber rod, forms a hydraulic buffer. This reduces the deceleration loads on the CEA at the end of the trip stroke. The hydraulic damping action is augmented by the spring and plunger arrangement on the spider.
When fully inserted, the CEAs rest on the upper guide structure support plate.

During normal operation, the control elements are withdrawn from the core into the upper plenum region. In this region, CEAs are enclosed in shrouds which are part of the upper guide structure assembly. The shrouds maintain the proper positioning of the CEAs and protect them from coolant cross-flow when withdrawn from the fuel assemblies.

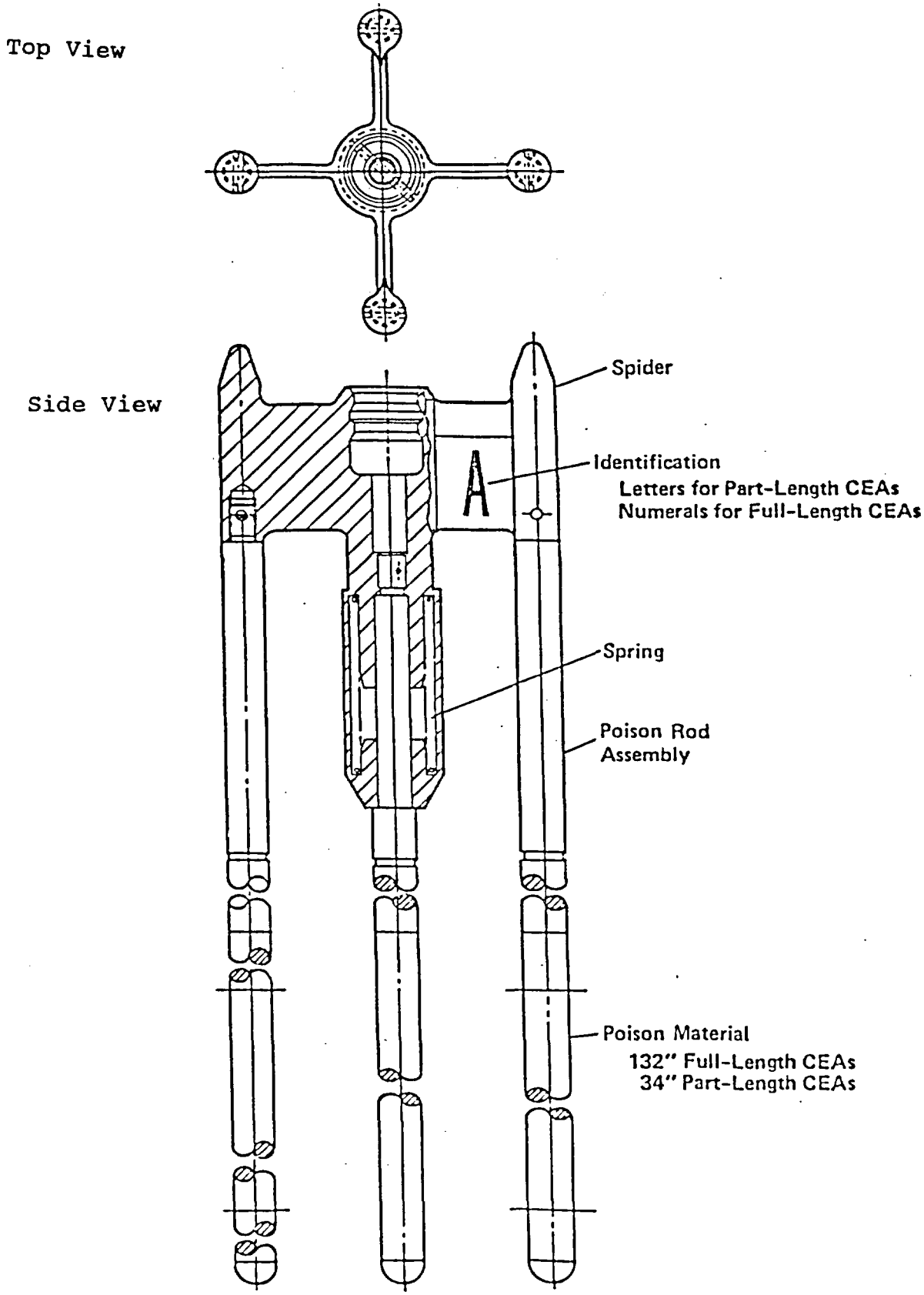

Figure 2.1 Combustion Engineering Full Length Control Element Assembly[4]

Table 2.1 Primary Functions of Major CEDM Sub-Systems

Sub-System	Component	Primary Functions
I. Control Element Assemblies	A. Control Element Rods	Provide reactivity control during normal operation. Effect rapid reactor shutdown. Provide sealed, pressure boundary containing poison material, and sufficient free volume to accommodate irradiation induced poison swelling and fission gas production.
	B. Fuel Assembly Guide Tubes	Provide envelope within each fuel assembly to maintain control element rod spacing and permit insertion of control element rods. Provide hydraulic snubber action to absorb kinetic energy of the CEA during scram.
	C. Upper Guide Structure	Maintain CEA spacing when withdrawn from fuel assembly. Protect CEA from coolant cross flow effects in upper plenum.
II. Control Element Drive Mechanisms	A. Motor Housing Assembly	Serve as primary coolant pressure boundary. Provide free volume to house internal CEDM components (motor assy, driveshaft) and support coil stack assembly.
	B. Motor Assembly	Provide linear motion to CEA through proper engagement of latches with drive shaft.
	C. Upper Pressure Housing Assembly	Provide sufficient free volume to allow for complete withdrawal of drive shaft. Provide means to vent mechanism after system filling and prior to hydrostatic test or operation.
	D. Extension Shaft Assembly	Provide circumferentially grooved drive shaft, which when engaged by latches, raises or lowers CEA. Provide a means of attaching CEA to lower end of extension shaft through individual gripper fingers. Provide attachment for permanent magnet to actuate reed switches.
	E. Coil Stack Assembly	Provide magnetic force necessary to actuate motor assembly mechanical latches for engaging and driving the CEA extension shaft.

Table 2.1 Primary Functions of Major CEDM Sub-Systems (Cont'd)

Sub-System	Component	Primary Functions
III. CEDM Control System	A. Control Element Drive Control System and Control Power Programmer	Provide motive power to the CEDM coils or rack and pinion motor. Allow for gravity insertion of CEAs upon removal of CEDM power (by manual or automatic trip of Reactor Trip Switch Gear)
	B. Control Element Drive Mechanism Control System	Provide CEA position indication via pulse counts. Accept signals from reactor protection and monitoring systems.
	C. Rack and Pinion Control System	Provide signals to monitoring systems.
IV. CEA Rod Position Indication	A. Reed Switch Position Transmitter Assembly	Provide position signals to monitoring systems and optionally installed protection systems (Core Protection Calculator System).
	B. Pulse Count Position Indication System	Provide indirect (demanded) indication of CEA position from Control Element Drive Control System through monitoring pulses supplied to CEDM coils.
V. CEDM Cooling System	Fans, Cooling Shroud, Instrumentation	Provide forced air cooling to CEDM coils to maintain temperature below 350°F.

Table 2.2 CEA and CEDM Plant Data

Plant	Number of Full Length Control Element Assy.	Number Part Length Control Element Assy.	Number Single CEAs	Number Dual CEAs	CEDM Type[3]
Arkansas 2	73	8	81	0	MJ
Calvert Cliffs 1	77	0	37	20[1]	MJ
Calvert Cliffs 2	77	0	37	20[1]	MJ
Fort Calhoun	49	0	25	12[1]	RP
Maine Yankee	77	0	37	20[1]	MJ
Millstone 2	73	8	57	12[1]	MJ
Palisades	41	4	45	0	RP
Palo Verde 1	76	13	41	48[2]	MJ
Palo Verde 2	76	13	41	48[2]	MJ
Palo Verde 3	76	13	41	48[2]	MJ
St. Lucie 1	73	8	57	12[1]	MJ
St. Lucie 2	83	8	91	0	MJ
San Onofre 2	83	8	91	0	MJ
San Onofre 3	83	8	91	0	MJ
Waterford	83	8	91	0	MJ

[1]Dual CEAs consist of two single CEAs connected to a single extension shaft.

[2]System 80 plant, CEAs consist of 12 rods spanning four fuel assemblies.

[3]MJ: Magnetic Jack CEDM -- RP: Rack and Pinion CEDM

2.3 Control Element Drive Mechanisms

The Control Element Drive Mechanisms position the CEAs within the reactor core to control reactivity, or effect a rapid reactor shutdown by allowing the CEAs to quickly drop into the core during a scram. The CEDMs are electro-mechanical devices which provide controlled linear motion to the attached CEA in response to operating signals received from the CEDM Control System. Each mechanism is capable of withdrawing, inserting, holding, or releasing/dropping a CEA from any position in the core. Typically, CE reactors use the magnetic jack CEDM as shown in Figure 2.2. Table 2.4 lists the individual component materials for this mechanism. Two plants, in lieu of this type of CEDM, use a rack-and-pinion mechanism. Section 2.3.2 briefly describes this CEDM.

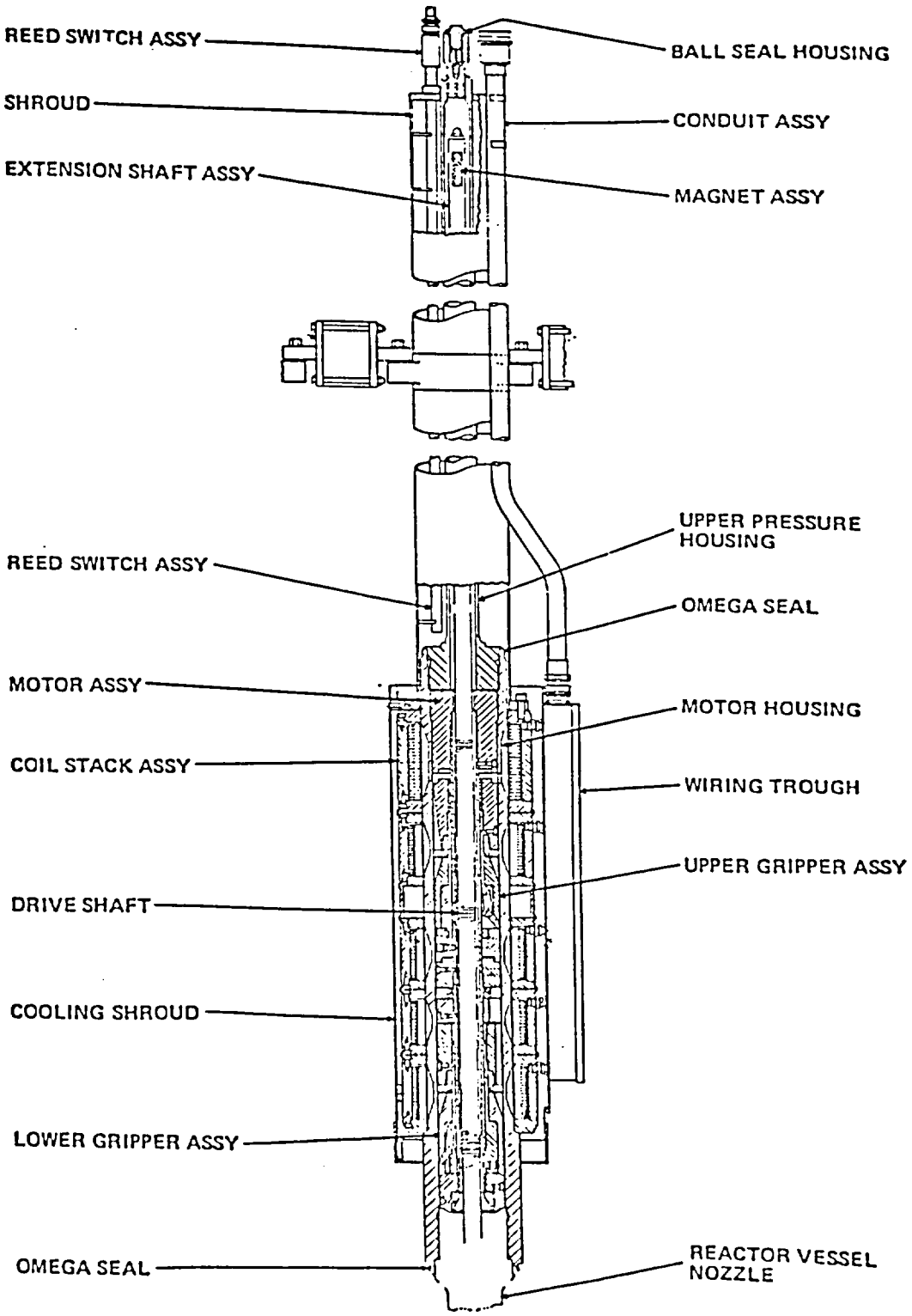

Figure 2.2 Combustion Engineering Magnetic Jack Control Element Drive Mechanism[7]

Table 2.3 Control Element Design Data[5]

Control Element	Full Length	Part Length
Number (Typ)	73	8
No. of Elements Per Assy	5	5
Clad Material	Inconel 625	Inconel 625
Clad Thickness (In.)	.035	.035
Clad O.D. (In.)	.816	.816
Center Element •Poison Material •Length (Typ) (In.)	 B_4C 146	 Inconel 625/ Water/B_4C 75/58/16
Corner Elements •Poison Material •Length (In.)	 B_4C/Ag-In-Cd 135.5/12.5	 Inconel 625/ Water/B_4C 75/58/16
Fuel Assembly Guide Tube •Material •ID (In.)	 Zircaloy-4 .90	 Zircaloy-4 .90

2.3.1 Magnetic Jack CEDM

The CE magnetic jack CEDM has a forty year design life. It is designed to operate without maintenance for one and one half years, and without component replacement for a minimum of three years. The main components of the magnetic jack CEDM are:

a) *Motor Housing Assembly:* The two primary functions of this assembly are to (1) serve as the primary coolant pressure boundary which houses the internal CEDM components, and (2) locate and support the gripper coils. This assembly is a Type 403 stainless steel hollow tube with internally threaded upper and lower end fittings. The lower Inconel end fitting screws down upon the reactor head nozzle and is omega seal welded. An omega seal is a particular flange design, which when joined with a mating surface, resembles the greek omega symbol (Ω). The central portion of the motor housing assembly has an external "S" contour, (Figure 2.3), which allows the gripper coils to be located closer to the internally mounted motor assembly. The Type 348 stainless steel upper end fitting threads into the upper pressure housing.

b) *Motor Assembly:* The motor assembly (Figure 2.4) is internally pinned to the motor housing assembly, and when actuated by the coil stack assembly, provides linear motion to the CEA

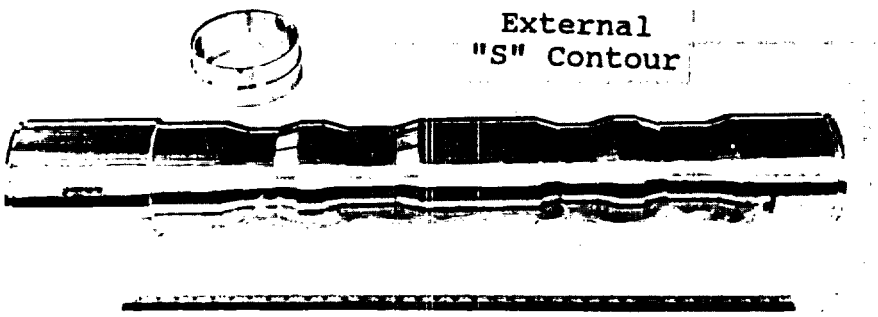

Figure 2.3 CEA Motor Housing Assembly

Table 2.4 Magnetic Jack Type CEDM[6]

Component	Material
1) Motor Housing Assembly	
•Pressure Housing	Type 403 Stainless Steel
•End Fittings	Nickel-Chromium-Iron Alloy
2) Upper Pressure Housing	Type 316 Stainless Steel
•Vent Valve Seal	Type 440 Stainless Steel Ball/Type 316 Stainless Steel Seat
3) Motor Latches, Links, Pins	High Cobalt Alloy
4) Motor, Extension Shaft Springs	Inconel X-750
5) Motor Magnet	Type 410 Stainless Steel
6) Motor Fasteners	Type 304 Stainless Steel
7) Extension Shaft	Type 304 Stainless Steel
8) Extension Shaft Magnet	Alnico No. 5
9) Motor and Extension Shaft Wear Surfaces	Chromium Plated
10) Magnet Coils	Copper wire insulated with high temp. enamel, vacuum impregnated with high temp. varnish. Fiberglass taped and encapsulated with silicone.
11) Coil Housings	Nickel Plated Carbon Steel

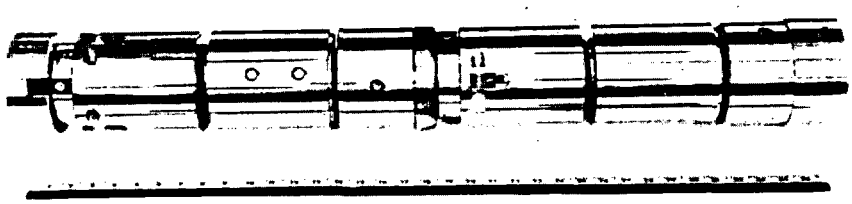

Figure 2.4 Motor Assembly

through two sets of grippers concentrically located around the drive shaft. The upper grippers position the drive shaft, while the lower grippers transfer the weight of the shaft from the upper grippers during movement. When the coils are energized, the sliding magnets move, camming a linkage, which allows the latches to engage the drive shaft.

c) *Upper Pressure Housing Assembly:* This assembly comprises the upper half of the CEDM (Figure 2.5). The three main purposes of the assembly are to 1) enclose the extension shaft assembly, 2) allow for the complete withdrawal of the drive shaft from the core, and 3) allow for CEDM venting and flushing via a double closure fitting. The upper end of the Type 348 stainless steel assembly contains a double closure fitting for venting and flushing the CEDM housing. The double closure on the upper end has an internal ball (Type 440 stainless steel) and seat seal (Type 316 stainless steel) with an internal stem to keep the ball and seat seal closed. The ball and seat seal subassembly has an omega seal welded end cap over it, which utilizes an o-ring to prevent seal leakage. Venting and flushing of the housing is accomplished through the ball seat end fitting. The lower portion of the assembly is threaded, and omega seal welded to the top of the motor housing.

d) *Extension Shaft Assembly:* The three primary functions of this assembly are (1) to mate with the motor assembly latches to raise or lower the CEA, (2) to couple the CEDM with the CEA spider hub, and (3) to actuate the reed switches when the CEA is moved (Figure 2.6). This assembly is a Type 304 stainless steel rod comprised of the following sub-assemblies:

1) expandable collet,
2) plunger,
3) gripper assembly,
4) drive shaft,
5) operating rod,
6) extension sleeve, and
7) magnet assembly.

The expandable collet and plunger connects the operating rod to the spider assembly hub. The gripper assembly consists of an expandable collet with notched fingers and a spring-loaded inner-tapered plunger. In the coupled position, the plunger forces the notched fingers radially outward, locking it into the internal grooves on the CEA hub (Figure 2.7). The permanent magnet assembly on the top of the drive shaft activates the reed switches to provide position indication.

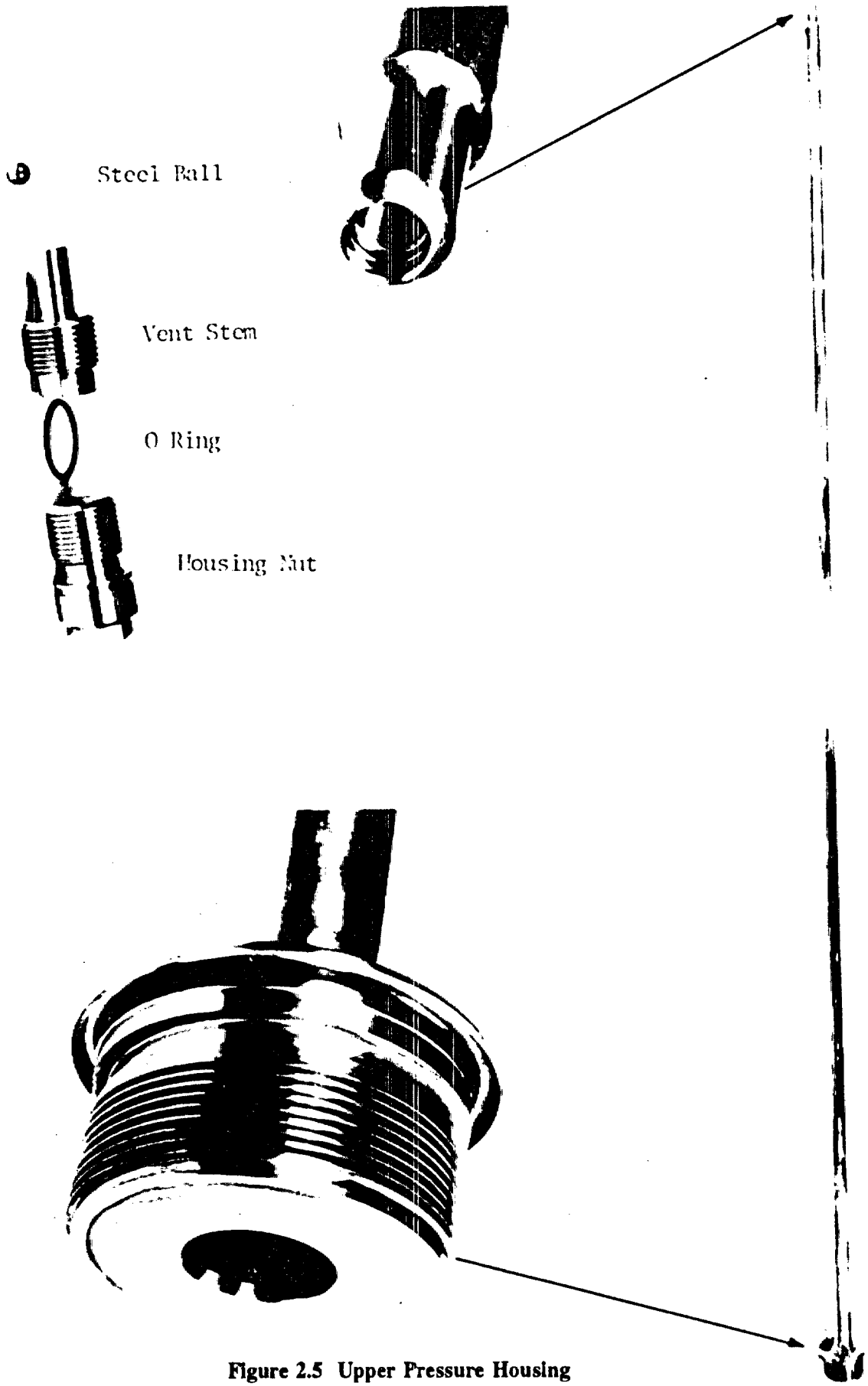

Figure 2.5 Upper Pressure Housing

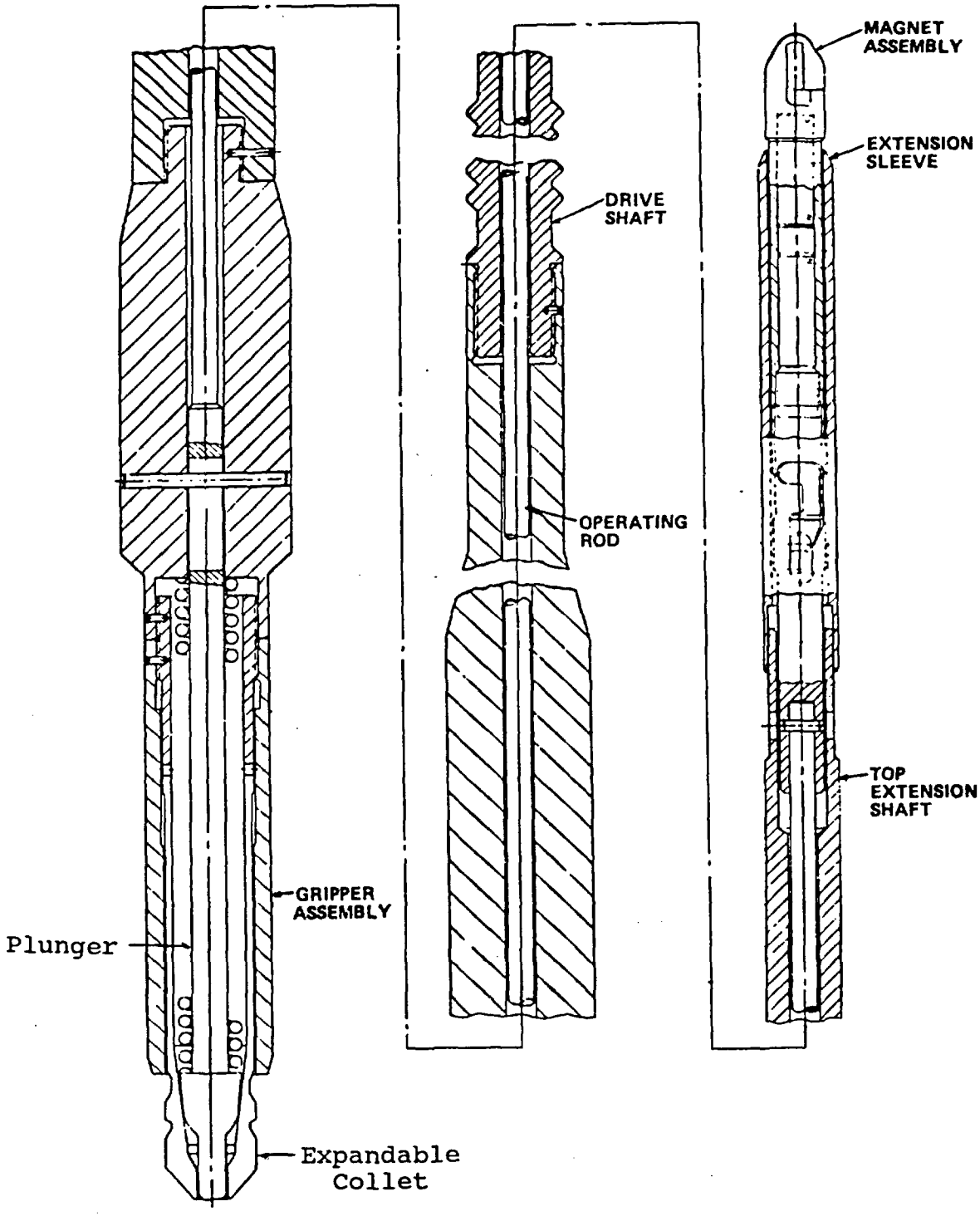

Figure 2.6 Extension Shaft Assembly

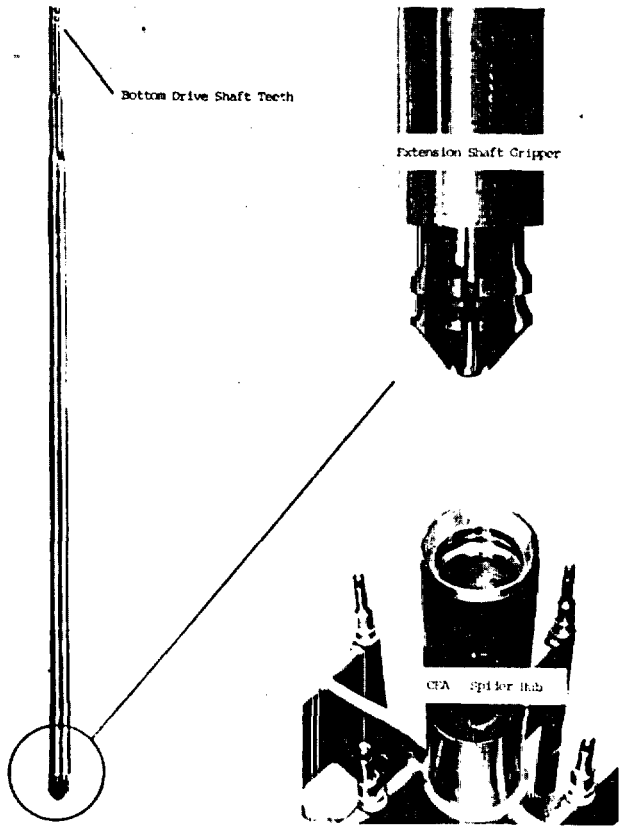

Figure 2.7 Gripper and CEA Spider Hub

e) *Coil Stack Assembly:* The coil stack assembly consists of five DC coils installed externally to the pressure housing. When powered, these coils activate the mechanical latches of the motor assembly, resulting in CEA movement. These coils are functionally identified as the:

1) lift coil,
2) upper gripper coil,
3) pull down coil,
4) load transfer coil, and
5) lower gripper coil.

The pull down coil has been eliminated in the System 80 design, which uses only four coils and identifies them as:

1) upper lift coil
2) upper gripper coil
3) lower lift coil
4) lower gripper coil

Each coil is fabricated from round copper wire, insulated with high pressure enamel, and vacuum impregnated with a high temperature varnish. After impregnation, the coil is wrapped with fiberglass tape, and encapsulated with a silicone compound. A nickel plated carbon-steel housing encloses the coils.

2.3.2 Rack and Pinion CEDM

Two plants (Fort Calhoun and Palisades) use a rack-and-pinion CEDM in lieu of the conventional magnetic jack CEDM (Figure 2.8.). This type of CEDM has a drive shaft running parallel to the rack, which drives the pinion gear through a set of bevel gears. An electric motor, operating through a gear reducer and a magnetic clutch, drives the attached CEA. When the magnetic clutch is de-energized, the CEA inserts freely into the core. An anti-rotation device is incorporated into the clutch mechanism, which prevents the CEA from moving upward when it is de-energized. The rack-and- pinion CEDM is cooled by water, as opposed to forced air.

The main components of this CEDM are:

- *Pressure Housing:* Consists of lower and upper sections, joined near the drive top by a threaded autoclave closure. The stainless steel tubular lower housing is welded to an eccentric reducer and flange piece at the lower end, which mates with the reactor vessel head. The upper portion of the lower housing forms the autoclave closure with a recessed gasket surface for a spirally wound gasket. The upper housing contains the flange which mates with the lower housing, a cavity containing the rotating drive seal, and a tubular housing extension. A flange closure allows access for attaching and detaching the CEA. The rotating shaft seal is fabricated from tungsten carbide and Graphitar, and fitted with o-rings to prevent seal leakage. A cooling ring surrounds the rotating seal, to maintain the temperature below 250°F.

- *Rack and Pinion Assembly:* This assembly is an integrated unit which fits into the lower pressure housing, and couples to the motor drive package through the upper pressure housing. Bevel gears transmit the torque from the vertical drive shaft to the pinion gear. The rack engages the pinion gear, and is held in proper engagement by the backup roller. A permanent magnet is attached to the upper end of the rack for reed switch actuation.

- *Motor Drive Package:* Consists of a fractional horsepower, 120v, single phase 60 Hz motor which operates the drive. The motor, brake, clutch, position indicator and limit switches are all mounted on a common frame to maintain position and alignment. The frame is flange mounted to the upper pressure housing.

- *Position Indication:* Two independent position indication systems are used. The primary system consists of a synchro-transmitter geared to the main driveshaft with position readout provided by synchro-receivers connected to the transmitter. The second system consists of magnetically actuated reed switches which provide a voltage corresponding to CEA position.

2.4 Control Element Assembly Rod Position Indication System

Position indication for each CEA is provided by two independent systems, the pulse counting and the reed switch position indication systems. The reed switch position transmitter provides a voltage indicative of the actual rod position. The Control Element Drive Control System provides pulses corresponding to step demand requests which are counted by the monitoring system(s).

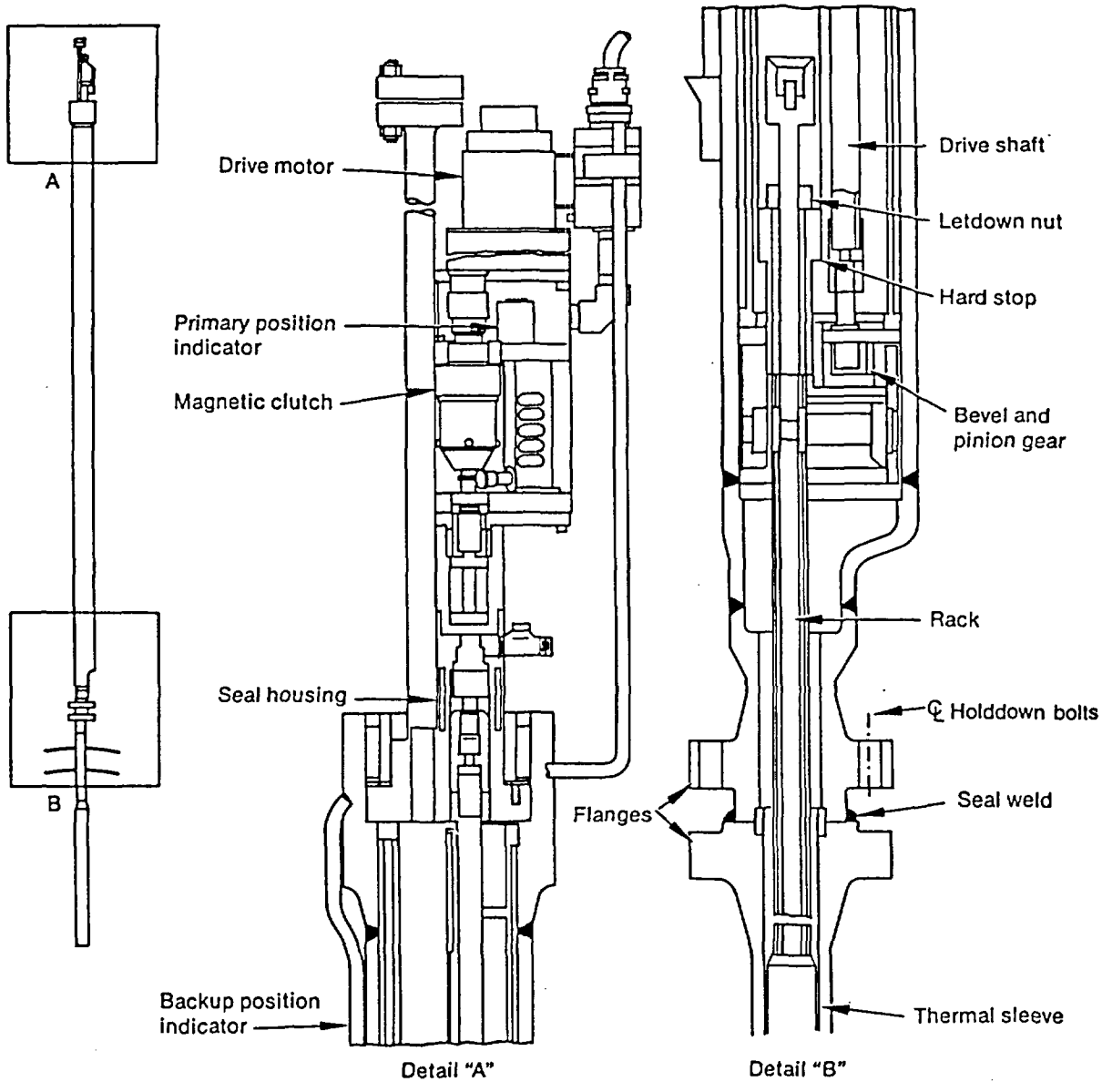

Figure 2.8 Combustion Engineering Rack and Pinion CEDM[8]

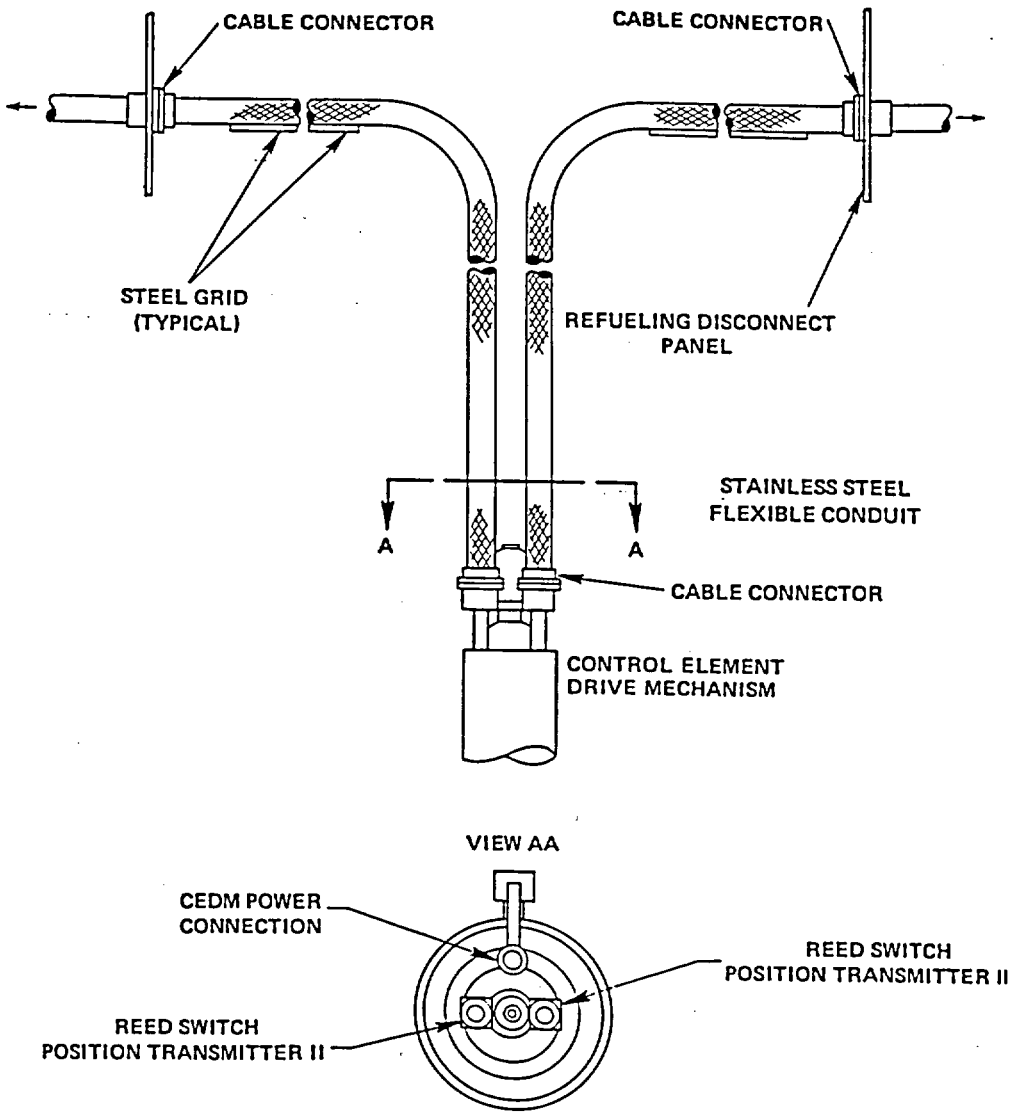

Figure 2.9 Combustion Engineering Reed Switch Position Transmitters[9]

The reed switch position indication system consists of two redundant reed switch position transmitter (RSPT) assemblies located adjacent to the upper pressure housing (Figure 2.9). Each consists of one hundred reed switches spaced evenly at 1.5 inch intervals. When activated by the permanent magnet attached to the CEDM extension shaft, the reed switches supply different resistances and hence different voltage drop values as shown in Figure 2.10. The voltage output from the amplifier corresponds to the actual CEA location in the core.

Each RSPT provides a position signal to a monitoring system (such as the plant computer system, the analog display system, or the core mimic display system) or to an optionally installed protection system (such as the Core Protection Calculator System). Each RSPT also provides upper and lower electrical limit and dropped rod signals to the Control Element Control System.

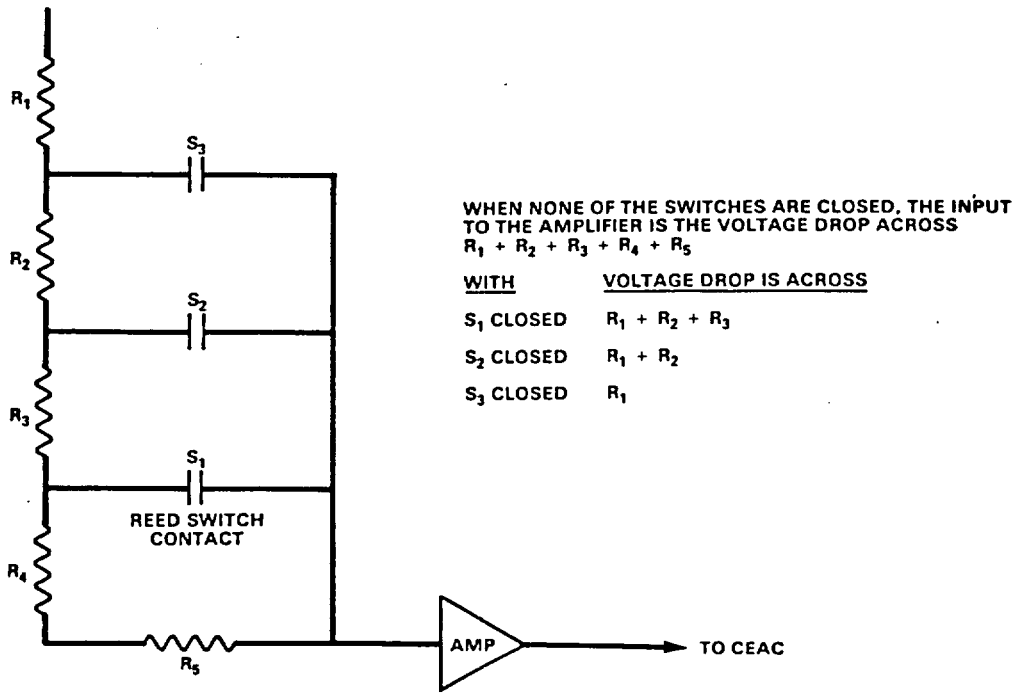

Figure 2.10 Combustion Engineering Reed Switch Position Transmitter (RSPT) Typical Circuit

Rod position indication via pulse counts is performed by the plant computer. Each step command to the older Control Element Drive Control System generates a corresponding withdrawal or insertion pulse. In control systems which have been upgraded with microprocessor controllers, the withdrawal or insertion pulse is generated only if the step request is successful. The plant computer monitors and counts the respective pulses and generates a rod position. Some plants may also have a totalizer for pulse counts for each CEA installed as part of the CEDCS. These totalizers are not normally utilized for CEA position information.

Since rod position indication via pulse counts is based upon step requests in older CEDCS, as opposed to actual successful steps with the microprocessor controllers, a stuck rod or a misoperation/non-step may result in incorrect rod position indication. Rod positions derived from pulse counts are periodically compared with RSPT rod indication and readjusted. Similarly, rod positions must be readjusted following a scram or rod slippage.

2.5 Control Element Drive Control System

As shown in Table 2.5, three distinct control element drive control systems depending upon plant age, are used by CE. The two original plants, Palisades and Fort Calhoun, use the rack-and-pinion system. The older magnetic jack type CEDM plants use the Control Element Drive System (CEDS), while the newer plants use the improved Control Element Drive Mechanism Control System (CEDMCS). The CEDMCS is schematically shown in Figure 2.11.

Table 2.5 Combustion Engineering Control Element Drive Control Systems

Rack and Pinion Control System	Control Element Drive System (CEDS)	Control Element Drive Mechanism Control System (CEDMCS)
Fort Calhoun	Calvert Cliffs 1&2	Arkansas 2
Palisades	Maine Yankee	Palo Verde 1,2,3
	Millstone 2	San Onofre 2&3
	St. Lucie 1	St. Lucie 2
		Waterford 3

2.5.1 System Operation

Each control system consists of the components required to allow for CEA motion and proper positioning in the core. Signals are received from various plant systems: e.g., automatic CEA motion signals from the Reactor Regulating System, CEA motion prohibit from the Analog Display System and/or Reactor Protection System, manual motion signals from the operator, arm and drop signals from the Reactor Power Cutback System, and sequencing signals from the Plant Monitoring System. These signals cause the control system to respond by applying sequential power to the CEDM coils resulting in CEA motion, or to remove CEDM holding power from pre-selected cutback groups. A reactor trip signal opens the Reactor Trip Switch Gear, which removes power from all of the CEDM coils, resulting in all of the CEAs being gravity inserted into the core.

The CEDS transmits motion signals from the control panel to the coil power programmers (CPP), which actuate the stepping cycle to raise or lower the CEA. The CEDMCS combines the control panel/CPP interface into one integrated system. Several plants have upgraded the CEDMCS by installing Automatic CEDM Timer Modules (ACTMs). The ACTMs are used to provide on-line monitoring of CEDM engagement during stepping and to monitor and take corrective actions for inadequate holding currents in grippers and for high coil currents. Otherwise, both the CEDS and the CEDMCS are functionally identical.

The CEAs are functionally grouped as shutdown, regulating, and part-length rods. The shutdown groups are the first to be withdrawn during reactor startup, followed by part-length CEAs. The regulating rods are the last to be withdrawn to attain criticality. For non-tripped reactor shutdowns, the regulating rods are inserted first, followed by the part-length groups and then the shutdown groups. In the event of a reactor trip, all of the CEAs insert.

Four different control modes are utilized in CE reactors, specifically:

1) manual sequential group movement,
2) automatic sequential group movement,
3) manual group movement, and
4) manual, individual CEA movement.

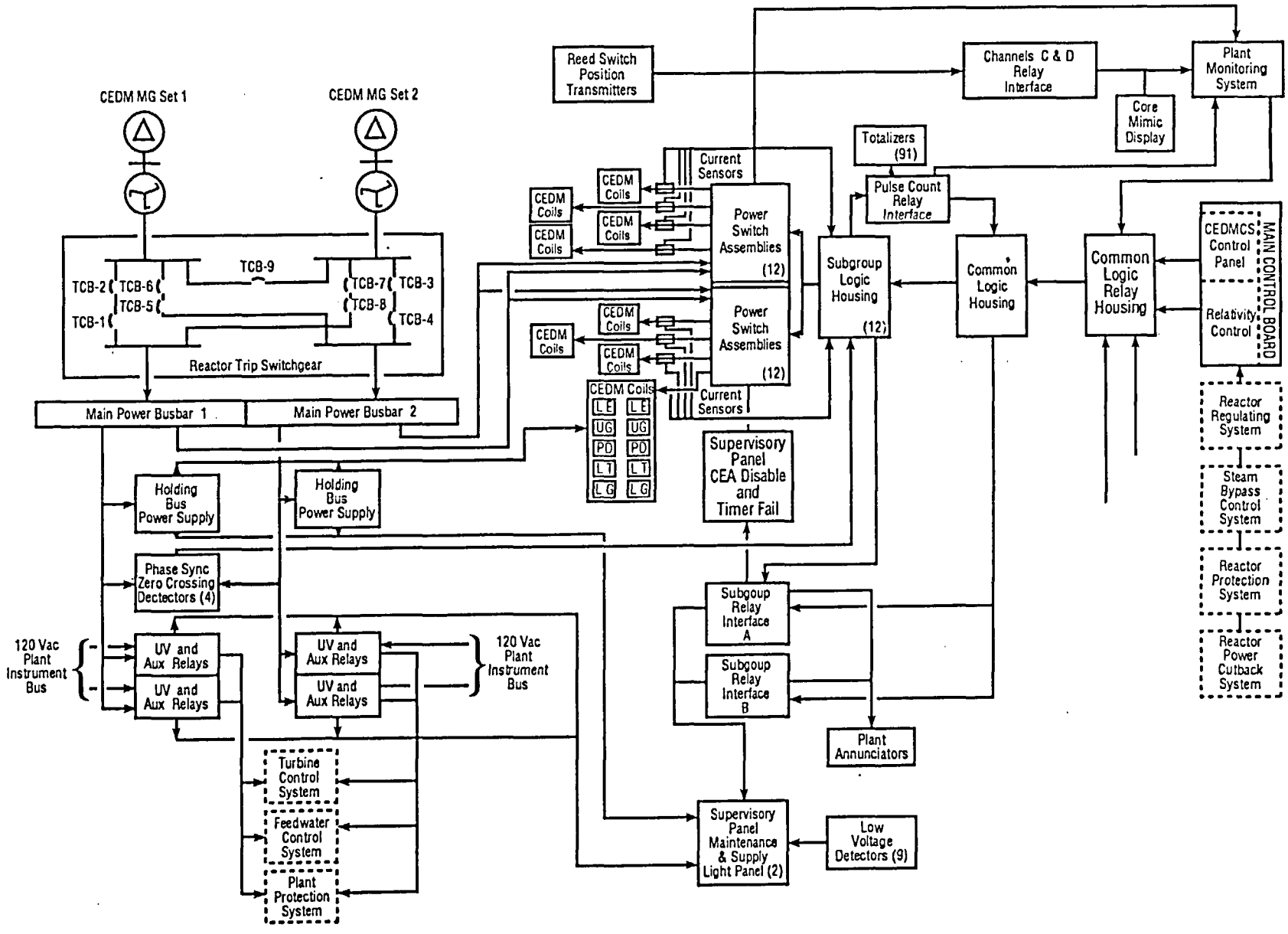

Figure 2.11 Typical Pre-System 80 with ACTM Upgrade and Interfaces

Sequential group movement functions such that when the moving group reaches a programmed low or high position, the next group begins movement, thus providing overlapping motion of the regulating groups. Applied successively to all regulating groups, this procedure results in a smooth, continuous reactivity rate of change. The shutdown CEAs are moved in the manual control mode only, with either individual or group movement. A selector switch permits withdrawal of only one shutdown group at a time.

2.5.2 System Description

CEDM power is obtained from redundant motor-generator (MG) sets. The MG set motor is a 480 vac 3-phase, induction motor which receives power from a non-class 1E bus. The motor drives a 240 vac, 3 phase, 60 Hz generator.

CEDM power from the Reactor Trip Switch Gear is routed to the control system via two distribution buses which are tied together at the control system cabinets. Undervoltage devices monitor the CEDM power, and upon loss of 240vac, provide signals to the Turbine Trip and Feedwater Control Systems.
The main logic and power components include:

- *Common Logic Relay Interface:* Provides an isolation relay interface for signals to/from systems external to the control system.

- *Common Logic Housing:* Synchronizes CEA subgroup and group motion to ensure compatibility between operational mode and group selection. This provides the system timing required for single or multi-group operation, including a one step deviation limitation; transferring raise or lower commands to appropriate subgroup logic housing; and permitting a low rate of operation for regulating groups in manual sequential mode. The common logic housing also ensures that only a single subgroup is assigned to a holding bus at one time. Hold bus subgroup selection relays are mounted elsewhere in the control system.

- *Subgroup Logic Housing:* Controls the motion and holding of the CEAs by controlling the firing angle of the Power Switch Assembly SCRs and the actuation sequence of the CEDM coils. Some control systems have been upgraded by the Automatic CEDM Timer Module (ACTM), a microprocessor based controller which monitors and controls the current powering the coils. The current waveforms provide a direct indication of the movement of the magnetic jack. The ACTM utilizes closed loop control to ensure proper stepping sequence. The ACTM also monitors for high coil currents and inadequate gripper holding currents, and takes corrective action. Other plants use a CEA timer card which controls the firing.

- *Power Switch Assemblies:* Provides coil voltages directly to the interconnected CEDM coils. Each CEA subgroup has a dedicated Power Switch Assembly. A disconnect switch permits a CEA subgroup to be removed from the power switch SCR power supply, and to be transferred to a holding bus for maintenance (Figure 2.12). Coil power programmers (CPP) are used in the CEDS plants to perform the same function.

- *Subgroup Relay Interface:* Switches the logic level voltages, representative of the system status, to lamp and relay voltages for use by the CEDMCS and plant annunciators.

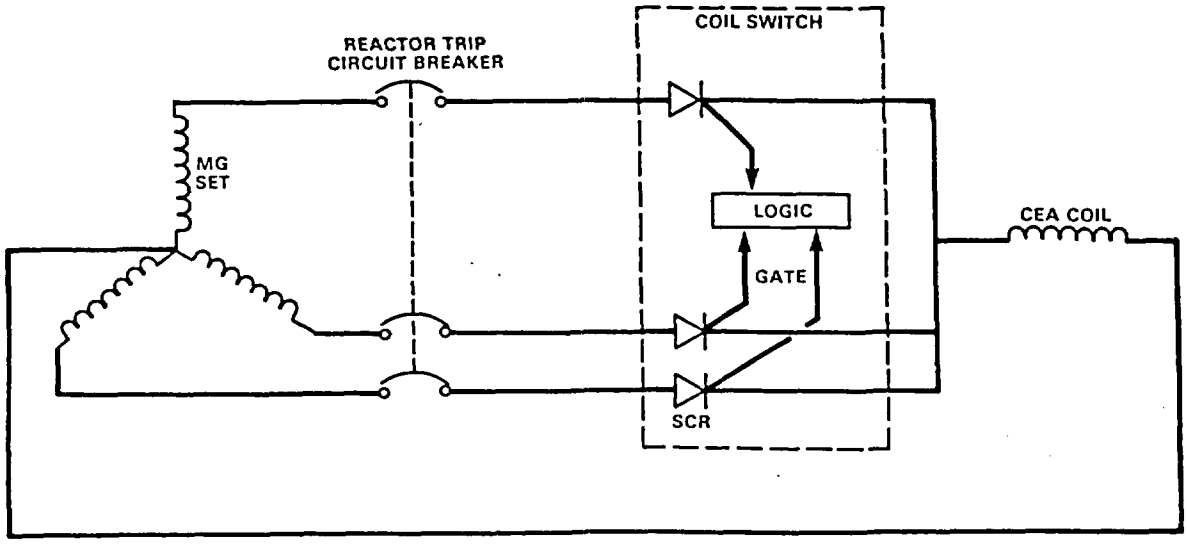

Figure 2.12 Combustion Engineering Typical Power Switch

- *Pulse Count Relay Interface:* Responds to each CEA step by means of contact closures. Each CEA pulse controls a separate pulse count relay interface via an opto-isolator, for use by the pulse count position indication system.

- *Undervoltage and Auxiliary Relay Assemblies:* Monitors the three phase power inputs to the control cabinets, and provides a local indication and remote annunciation of an undervoltage condition.

- *Supervisory Panels:* Provide for system status display, the reset of Common Logic Housing latching circuits, and auxiliary circuit control.

For the rack and pinion CEDMs, power is supplied to the fractional horsepower, 120 v single phase 60 Hz motor in lieu of gripper coils.

2.6 CEDM Cooling System

Although not a safety-related system, the CEDM cooling system is required to ensure the continuous and reliable operation of the gripper coils. Continued operation without forced-air cooling can result in the overheating of the gripper coils, resulting in dropped CEAs. Typically, the cooling system is a forced air system, consisting of two to four fans, depending on plant design, which are designed to maintain the coils at a temperature below 350°F. Redundant, stand-by fans ensure continuous cooling if the primary pump fails. A sheet-metal cooling shroud assembly located on the top of the reactor vessel head provides an annulus which directs the air from the fans to the coils. The cooling system is controlled and monitored remotely from the control room.

2.7 System 80

The System 80 design is a modification of the standard CE reactor design. New features include a larger core size, more fuel rods per fuel assembly,and modifications to the guidance method for the CEAs used for reactor control and shutdown.

The System 80 CEDMs are similar to the previous design CEDMs, with the following features:

- four coils versus five coils (pull down coil eliminated)
- two lift mechanisms and two gripper mechanisms.

The elimination of the pulldown coil necessitated the installation of a coil spring to insure the positive resetting of the latch assemblies. The drive shaft was also modified to allow the load transfer and stepping functions to be performed with the same coil.

3. DESCRIPTION OF THE BABCOCK & WILCOX CONTROL ROD DRIVE SYSTEM

3.1 Introduction

The Babcock & Wilcox control rod drive system is comprised of five main sub-systems (Figure 1.2):

I. *Control Rod Assemblies (CRAs):* Each individual CRA consists of neutron absorber rods connected to a common hub. When inserted into a fuel assembly, guide tubes maintain the proper spacing and position of the rods. Brazement assemblies maintain the CRA spacing and protect the CRAs from the effects of coolant crossflow when they are withdrawn from the fuel assemblies into the upper plenum region.

II. *Control Rod Drive Mechanisms (CRDMs):* Electro-mechanical devices which in response to automatic or manual control signals, insert, withdraw, or hold the CRAs stationary in the reactor core.

III. *Control Rod Drive Power and Control System:* Provides electric signals to CRDM stator coils, resulting in movement of the CRA to control reactivity or to shutdown the reactor.

IV. *Control Rod Drive Rod Position Indication:* Absolute CRA position indication is provided by magnetically actuated reed switches. The relative position indication system monitors pulses provided to the CRDM coils and indicates the demanded position.

V. *Control Rod Drive Cooling Water System:* A closed-loop cooling system which supplies cooling water to the CRDM stator coils.

Table 3.1 summarizes the main components and primary functions for the five sub-systems.

3.2 Control Rod Assemblies

A combination of control rod assemblies (CRAs) and axial power shaping rod assemblies (APSRAs) control reactivity in B&W reactors. Table 3.2 summarizes the number of control components used at each plant. Immovable burnable poison rod assemblies (BPRAs) are inserted to control the reactivity of fresh fuel assemblies, and are removed after the first burnup cycle.

The CRA consists of 16 individual control rods attached to a spider assembly which maintains the rods in a geometrical pattern to allow for insertion into the fuel assembly guide tube. The bayonet coupling on the end of the leadscrew mates with the CRA spider hub to connect the two. The typical control rod assembly is shown in Figure 3.1.

The APSRA controls the axial power shape across the core during the fuel cycle. It resembles the CRA with the exception of a slight modification to the spider hub to preclude the placing of an APSRA in a CRA location. The APSRA is also attached to the leadscrew of the CRDM at the spider hub, and is movable in the core. However, the CRDM is modified to prevent insertion into the core during a scram.

Table 3.1 Primary Functions of Major CRDM Sub-Systems

Sub-System	Component	Primary Functions
I. Control Rod Assemblies	A. Control Rods	Provide reactivity control during normal operation. Provide rapid reactor shutdown (scram). Provide sealed pressure boundary to contain neutron absorber material, including sufficient free volume to accommodate irradiation induced poison swelling and off-gas production.
	B. Fuel Assembly Guide Tubes	Provide envelope within each fuel assembly which maintains CRA spacing to permit free insertion.
	C. Upper Internal Brazement Assemblies	Maintain spacing of CRAs when withdrawn from fuel assembly into the upper plenum region. Protect CRA from coolant cross flow effects.
II. Control Rod Drive Mechanisms	A. Motor Tube	Provide primary coolant pressure boundary. Provide sufficient free volume to permit complete withdrawal of leadscrew. Support and position motor assembly for proper activation of rotor assembly.
	B. Closure Assembly	Provide means to vent CRDM after system filling prior to operation. Provide access to remotely couple/decouple leadscrew from CRA.
	C. Motor Assembly (stator)	Provide magnetic force necessary to engage the roller nuts with the leadscrew to hold or position the CRA in the core.
	D. Rotor Assembly	When actuated by motor assembly, roller nuts engage the leadscrew. When a rotating magnetic field is applied, roller nuts rotate around leadscrew, resulting in linear CRA motion.
	E. Thermal Barrier	Restrict circulation of primary coolant into CRDM to control rotor assembly temperature. Relieve pressure drop in CRDM following scram.
	F. Leadscrew Assembly	Provide a threaded leadscrew, when engaged by rotor assembly, results in linear CRA motion. Provide means of attaching leadscrew to CRA spider hub. Provide attachment for permanent magnet which actuates reed switches.
	G. Torque Tube Assembly	Prevent rotational motion of leadscrew during operation. Provide snubber assembly which dampens CRDM deceleration load during scram.

Table 3.1 (Cont'd) Primary Functions of Major CRDM Sub-Systems

Sub-System	Component	Primary Functions
III. CRDM Power and Control System	A. Power Supplies	Transform 480 volt, 3 phase plant power to 120 volt. six phase power for motor assembly actuation.
	B. Programmers	Control sequence of power supplied to individual phases of motor assembly to produce rotating magnetic field.
	C. Trip Breakers	Provide for rapid removal of power to motor assembly for reactor scram.
	D. Programmer Drive Motors (run and jog)	Provide means to control speed of CRA insertion or withdrawal.
IV. CRA Rod Position Indication	A. Absolute Position Indication System	Provide direct indication of CRA position through reed switch actuation.
	B. Relative Rod Position Indication	Provide indication of demanded CRA position by monitoring and counting pulses supplied to each motor assembly.
V. CRDM Cooling System	Centrifugal Pumps, Heat Exchangers, Surge Tank	Closed loop cooling system which provides cooling water to individual CRDM motor assemblies to prevent thermal overheating.

Table 3.2 CRA and CRDM Plant Data

	Number of Fuel Assys in Plant	Number of Guide Tubes Per Fuel Assy.	Number of CRAs Per Plant	Number of APSRAs Per Plant	CRDM Type
Arkansas-1	177	16	60	8	B
Crystal River	177	16	60	8	A
Davis Besse	177	16	53	8	C
Oconee 1	177	16	61	8	A
Oconee 2	177	16	61	8	A
Oconee 3	177	16	61	8	C
Rancho Seco	177	16	61	8	B
Three Mile Island 1	177	16	61	8	A

Table 3.3 Control Rod Assembly Data[11]

	Standard Rod	Extended Life
Number of CRAs	53-61 (Dependant core upon design	53-61 (Dependant upon core design)
Number of Rods per Assembly	16	16
Control Rod Outer Diameter (in.)	0.440	0.441
Cladding Thickness (in.)	0.021	0.0225
Cladding Material	Type 304 SS, Cold-Worked	Inconel
End Plug Material	Type 304 SS, Annealed	Inconel
Spider Material	SS, Grade CF3M	SS, Grade CF3M
Poison Material	80% Ag, 15% In, 5% Cd	80% Ag, 15% In, 5% Cd
Female Coupling Material	Type 304 SS, Annealed	Type 304 SS, Annealed
Length of Poison Section (in.)	134	139
Stroke of Control Rod (in.)	139	139

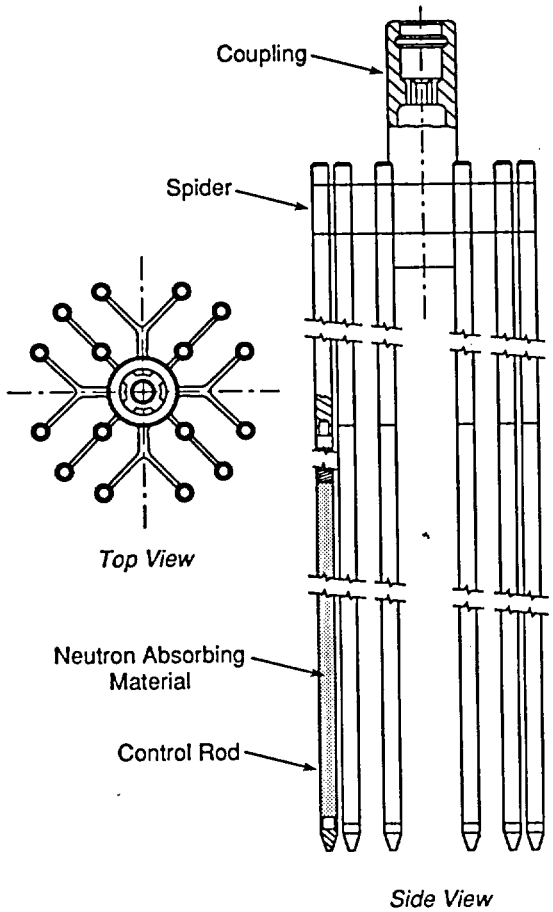

Figure 3.1 Babcock & Wilcox Control Rod Assembly[10]

Two specific control rod designs are presently used, the standard, and the extended life design. Both designs use silver-indium-cadmium (Ag-In-Cd) as the poison material. The extended life design is fabricated from Inconel clad as opposed to the standard, thinner-wall stainless steel tubing, and is also pre-pressurized with helium to reduce clad stresses. Table 3.3 lists additional design details for the two types of rods.

Currently, two axial power shaping rod designs, designated gray and black, are used (Table 3.4). The black APSR utilizes Ag-In-Cd poison, while the gray APSR uses a longer Inconel absorber section, and is pressurized with helium to reduce differential pressure stresses in the clad. Both use cold worked Type 304 stainless steel clad, and contain a region above the poison section which is vented to the primary coolant.

B&W reactor cores consist of 177 fuel assemblies. Each fuel assembly consists of fuel rods arranged in a 15 x 15 square lattice, with 16 Zircaloy guide tubes. The guide tubes provide a guidance envelope for the control rods during operation. When the control rods are fully withdrawn from the core, brazement assemblies in the upper internals maintain proper CRA alignment and protection from coolant crossflow effects.

Table 3.4 Axial Power Shaping Rod Assembly Data[12]

	APSRA - Black	APSRA - Gray
Number of Axial Power Shaping Rod Assemblies	8	8
Number of Rods per Assembly	16	16
Outside Diameter of Axial Power Shaping Rod (in.)	0.440	0.440
Cladding Thickness (in.)	0.021	0.027
Cladding Material	Type 304 SS, Cold-Worked	Type 304 SS, Cold-Worked
Plug Material	Type 304 SS, Annealed	Type 304 SS, Annealed
Poison Material	80% Ag, 15% In, 5% Cd	SS, Grade CF3M
Spider Material	SS, Grade CF3M	Inconel
Female Coupling Material	Type 304 SS, Annealed	Type 304 SS, Annealed
Length of Poison Section (in.)	36	63
Stoke of Rod (in.)	139	139

3.3 Control Rod Drive Mechanisms

The control rod drive mechanisms (CRDMs), shown in Figure 3.2, are electromechanical devices consisting of an electrically driven, rotating nut assembly within the primary coolant pressure boundary; a four pole, six phase stator, and a translating leadscrew which converts the rotary motion of the roller-nut assembly to linear travel of the leadscrew and CRA. All electrical components and attachments are mounted external to the reactor vessel, allowing for maintenance or removal without compromising system integrity. There are no electrical penetrations through the primary system pressure boundary. The operation of the roller nut CRDM is illustrated in Figure 3.3. When power is supplied to the CRDM, the roller nuts engage and rotate about the leadscrew, resulting in vertical CRA motion. When power is removed, the compression springs cause the two halves of the roller nuts to separate and disengage the leadscrew, causing the CRA to insert into the core (scram).

B&W designed the CRDM internals for twenty years of operation, based on the following assumptions:

1) the CRDM would be used exclusively with regulating rods,

2) regulating rods would frequently be re-positioned accumulating a total of 126,000 feet of leadscrew travel in twenty years, and

3) the plant would experience 500 trips in 20 years (25 trips/year).

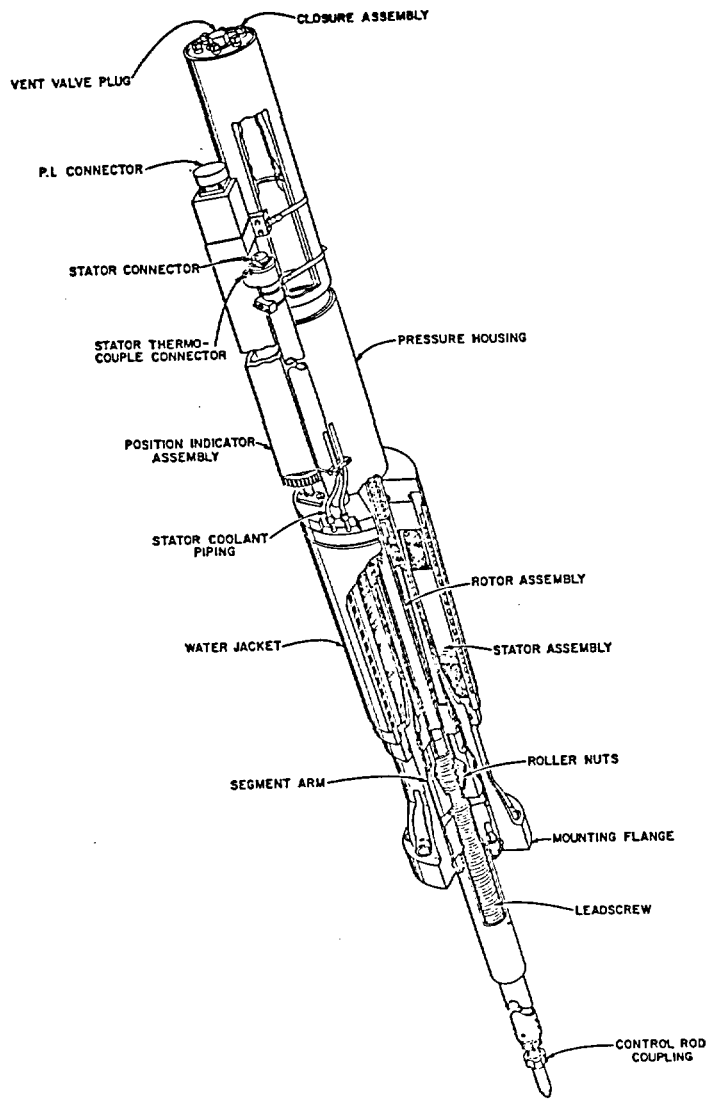

Figure 3.2 Control Rod Drive Mechanism[13]

Three CRDM types, designated Type A, B, and C are in use as indicated in Table 3.2. The main components of these CRDMs, the design features, and differences are discussed below.[15]

3.3.1 Motor Tube

The motor tube is a four section weldment, housing the rotor assembly, thermal barrier, leadscrew, and the torque tube assembly. When bolted to the reactor head, it forms the primary coolant pressure boundary. The tube wall between the rotor assembly and the stator is constructed of magnetic material which minimizes the magnetic air gap between the stator and rotor and increases the magnetic coupling to the rotor assembly. For the Type A and B CRDM's, this area is fabricated from low alloy steel clad on the ID with Inconel, while on the Type C CRDM, this section is fabricated from unclad Type 403 stainless steel.

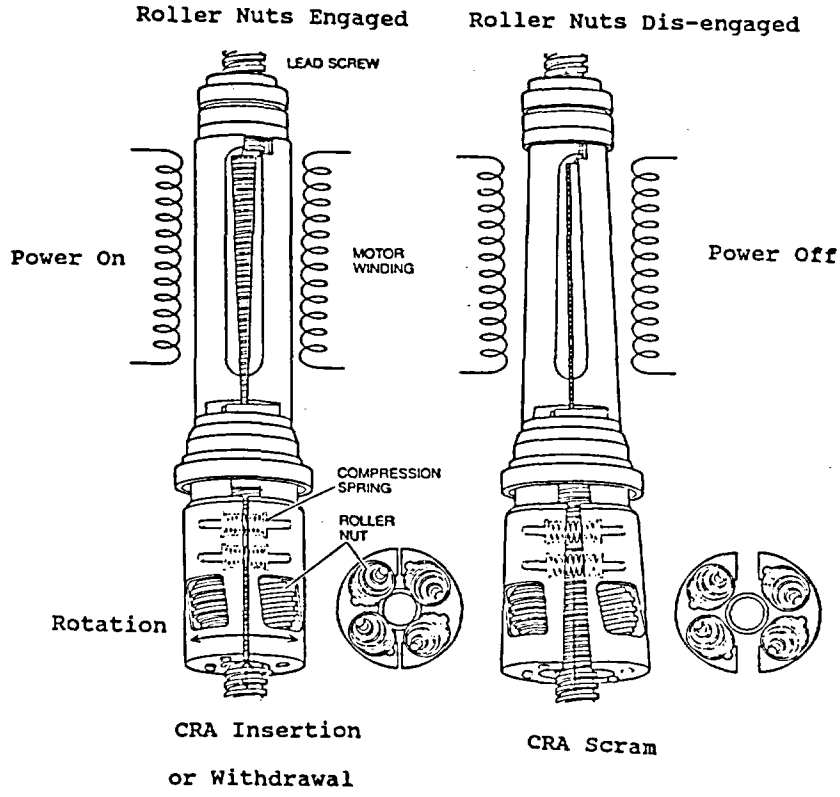

Figure 3.3 CRDM Rotor Assembly and Leadscrew[14]

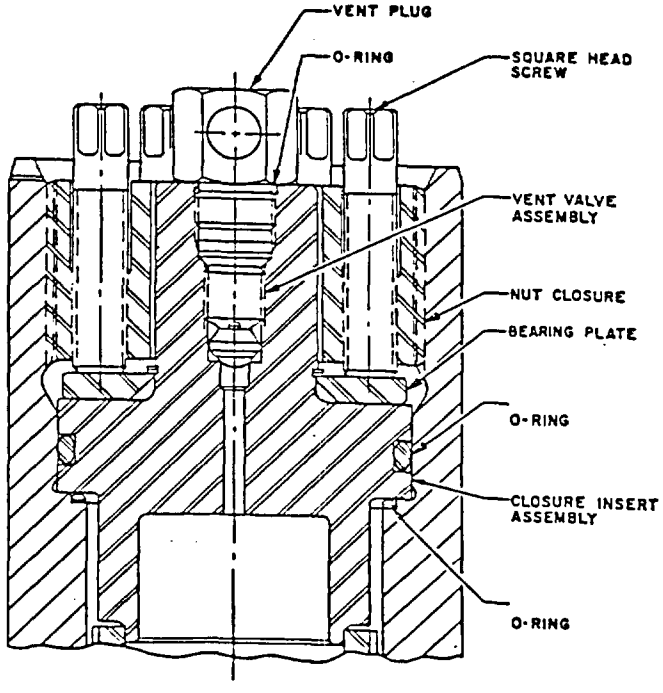

Figure 3.4 CRDM Vent Valve Assembly & Closure Parts

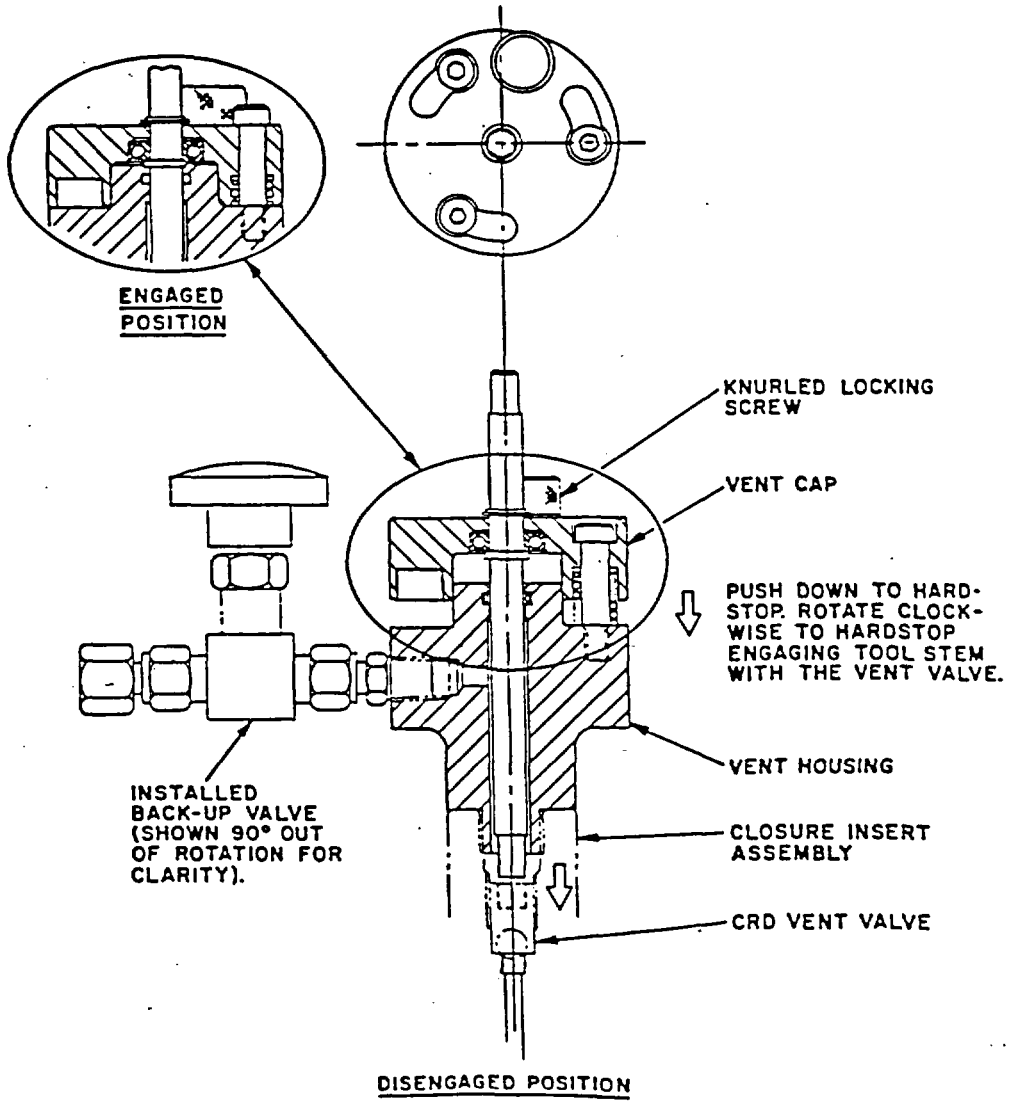

Figure 3.5 Venting Tool

The upper end of the motor tube supports the absolute position indication assembly, and houses the withdrawn leadscrew, torque tube, torque taker, and snubbers. It is fabricated from non-magnetic, stainless steel which is transition welded to the center section. The lower end of the center section is welded to a non-magnetic stainless steel forging. Double flexitallic gaskets serve as the seal between the CRDM and the reactor vessel nozzle.

3.3.2 Closure Assembly

The closure assembly (Figure 3.4) is located on the top of the motor tube, and consists of a removable closure insert assembly and vent plug. Removal of the closure insert assembly permits access to the torque taker assembly for remote coupling or un-coupling the CRA to the leadscrew. The insert closure assembly is retained by a closure nut which is threaded to the inside of the motor tube. The sealing load is supplied either by six jacking screws or by a hydraulically pre-loaded spring washer retained by the closure nut.

Removing the vent plug permits the venting of all non-condensible gases from the CRDM prior to reactor head removal or coolant fill and heat up. A special venting tool (Figure 3.5) is used for this task.

3.3.3 Motor Assembly

The motor assembly is mounted over the motor tube and when powered, generates the magnetic force which actuates the roller nuts and engages the leadscrew. The motor assembly is a synchronous reluctance unit with a 48 slot, 4 pole slip-on stator arrangement, containing cooling water coils in the outside casing. The stator is varnish impregnated and may be encapsulated after winding. It is 6 phase star connected to allow for pulse stepping operation, which advances 15 degrees per step.

Early stator designs used epoxy encapsulation rather than varnish impregnation. Impregnation improves coil heat transfer and electrical insulation properties. The Type C CRDM requires considerably less power to operate. Early stator designs (Figure 3.6) had cooling tubes wrapped around the housing. Machining additional grooves on the casing has increased stator cooling. Stator temperature is monitored by thermocouples and alarms if the winding temperatures exceed design limits.

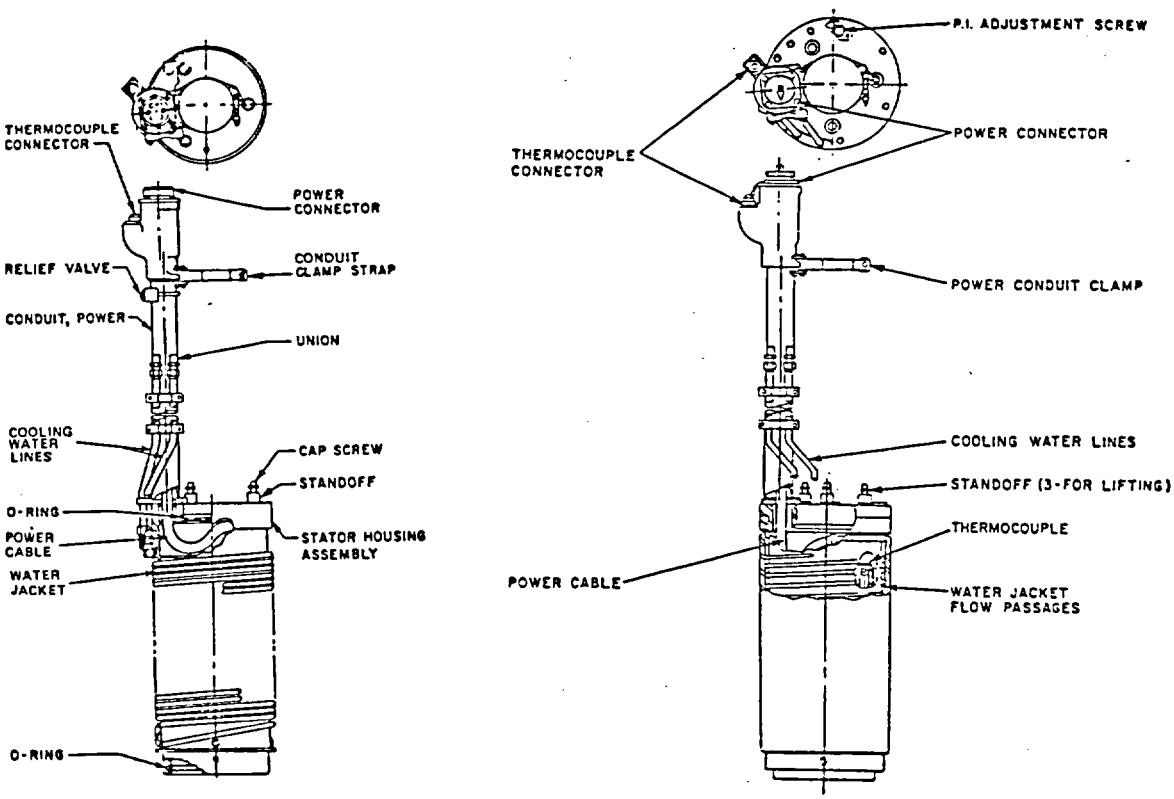

Tube Type Jacket (Stator Slot Type) **Groove Type Jacket (Tube Type)**

Figure 3.6 Stator Water Jacket Assembly

3.3.4 Rotor Assembly

The rotor assembly engages, holds, and positions the leadscrew when actuated by the motor (stator) assembly. The major components of the rotor assembly are the rotor tube, segment arms, roller nuts, pivot pins, segment arm springs, and the bearings (Figure 3.7). The rotor tube is a hollow tube with bearing journals on each end through which the leadscrew passes and the segment arms are attached. The lower journal is for the inner race of the thrust bearing, and the top journal is for the inner races of the synchronizing and radial bearings. The thrust and radial bearings provide radial alignment for the upper and lower portions of the rotor. The thrust bearing also carries all the axial loads applied to the rotor. Synchronizing pins on the top of each segment arm engage mating holes in the outer race of the synchronizing bearing. Radial motion of one segment arm is transmitted through the pin and bearing arrangement to the other segment arm. Without this synchronizing feature, one segment arm could move during a trip, while the other segment arm remained engaged with the lead screw.

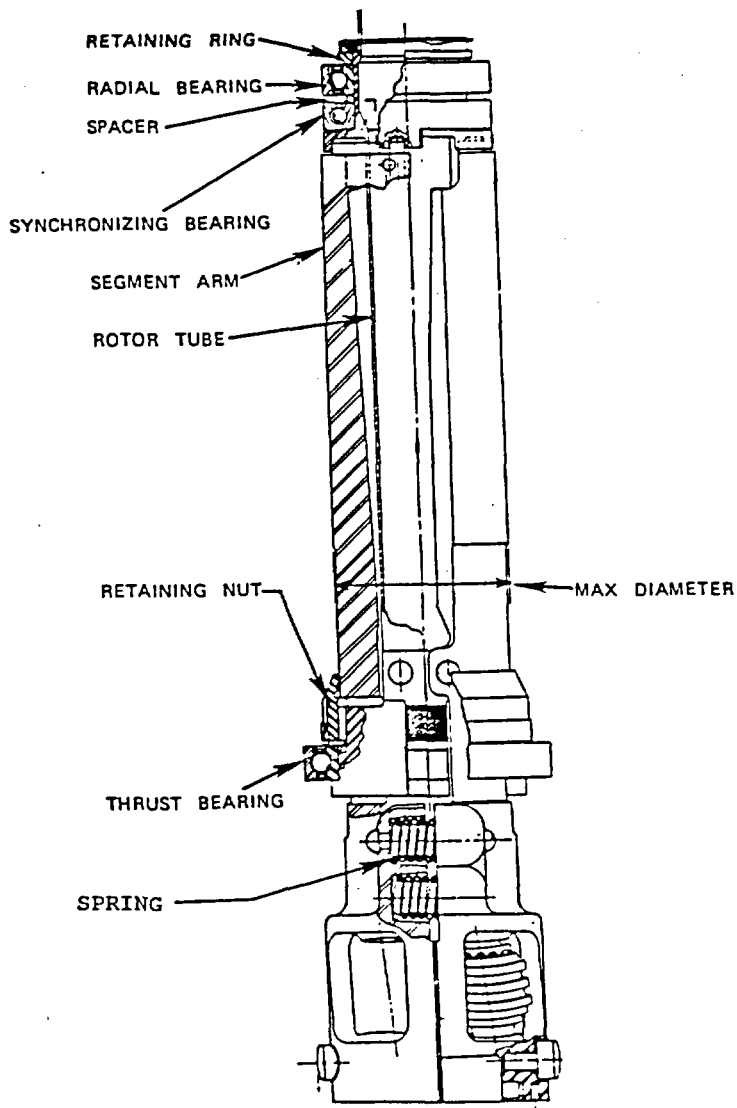

Figure 3.7 Partial Section Showing Roller Nuts Engaged

The magnetic stainless steel segment arms are mounted on the rotor tube by four pivot pins which allow the arms to rotate with, and pivot on, the rotor tube. The upper portion of the segment arms forms a four pole collapsible rotor. The lower portion of each segment arm has two spindle mounted roller nuts which mate with the leadscrew thread when the rotor assembly is latched. The magnetic field established by the stator pivots the upper portion of the segment arms outward, which moves the lower portion inward, engaging the roller nuts with the leadscrew. When the magnetic force is removed, or reduced in strength, the segment arm springs force the lower portion outward, disengaging the roller nuts, and inserting the CRA into the core.

3.3.5 Thermal Barrier

The thermal barrier is located in the lower portion of the CRDM where it restricts the circulation of the primary coolant, and acts as an insulator between the reactor vessel head and the CRDM, maintaining the rotor assembly between 300 and 350°F during normal operation. To allow unrestricted travel of the leadscrew, a clearance hole is drilled through the center of the housing. Four ball-check valves relieve the pressure drop within the drive during a scram. Coolant, which enters the drive during a scram, returns to the system through this clearance hole when the rod is withdrawn (Figure 3.8).

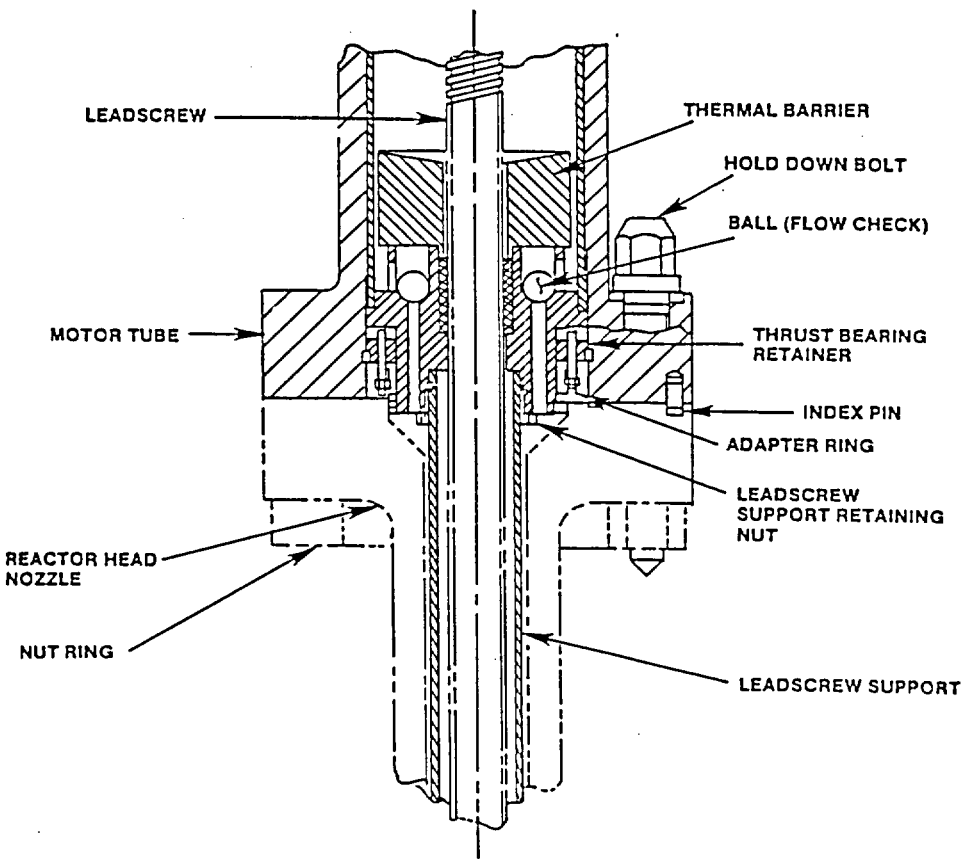

Figure 3.8 Leadscrew Guide Assembly

3.3.6 Leadscrew Assembly

The leadscrew assembly is the connecting link between the CRA and the rotor assembly. It consists of an upper extension, leadscrew, lower extension, and male coupling. The leadscrew and the torque tube convert the rotational motion of the segment arms into vertical CRA motion. The leadscrew travels vertically in the torque tube, and is attached to the torque taker by the leadscrew nut. For the Type A CRDM's, the torque taker contains a key which engages a slot in the torque tube, preventing leadscrew and torque taker rotation. For Type B and C CRDM's, the torque taker contains the keyway, and the key is on the torque tube.

The leadscrew thread is a modified ACME with a pitch of .375 inch and a relief angle which facilitates the disengagement of the roller nuts from the leadscrew. The male bayonet coupling on the lower end of the leadscrew mates with the hub of the spider assembly connecting the CRA with the CRDM. The CRA is coupled and uncoupled with a special handling tool inserted through the closure assembly. To couple a CRA, the leadscrew is lowered until the coupling is positioned inside the spider hub. Simultaneously, a pin on the upper portion of the leadscrew is positioned within the torque taker. The handling tool rotates the leadscrew 45°, positioning the coupling tabs so that they grapple the CRA. Tightening the leadscrew nut prevents any movement relative to the torque taker and CRA. The reverse procedure is used to decouple the CRA.

3.3.7 Torque Tube And Torque Taker

The torque tube is a separate tubular assembly containing either a key or keyway extending the full length of the leadscrew. The tube assembly is secured against vertical and rotational movement at the lower end of the closure assembly by a retaining ring, keys, and the insert closure. The lower end of the torque tube houses a hydraulic snubber assembly which dampens the deceleration load during a scram. Snubber damping characteristics are determined by the size and position of the holes in the snubber cylinder wall, and the clearances between the snubber piston and bushing. Practical operating clearances limit the amount of hydraulic snubbing. At the end of the snubbing stroke, the residual kinetic energy is absorbed by a buffer spring. The leadscrew contacts the motor-tube closure insert assembly to stop outward motion.

The torque taker assembly also consists of the permanent magnet which activates the reed switches, the snubber piston, and positioning key/keyway. This assembly is attached to the top of the leadscrew and mates with the torque tube providing radial and tangential leadscrew support. (Figure 3.9)

3.3.8 CRDM Operational Considerations

To ensure the proper operation of the CRDM, specific operational limitations have been established:

a) *Cooling Water:* A minimum flow of 2 gpm per stator is required. The inlet temperature should be between 80°F (min.) and a maximum of 120°F (max.). If cooling water is lost or reduced, a high stator temperature alarm will be received at 160°F (max.). A CRDM must be de-energized when it reaches 180°F. If more than one CRDM attains this level, the reactor should be tripped. Figure 3.10 shows the minimum allowable operating pressure and temperature ranges.

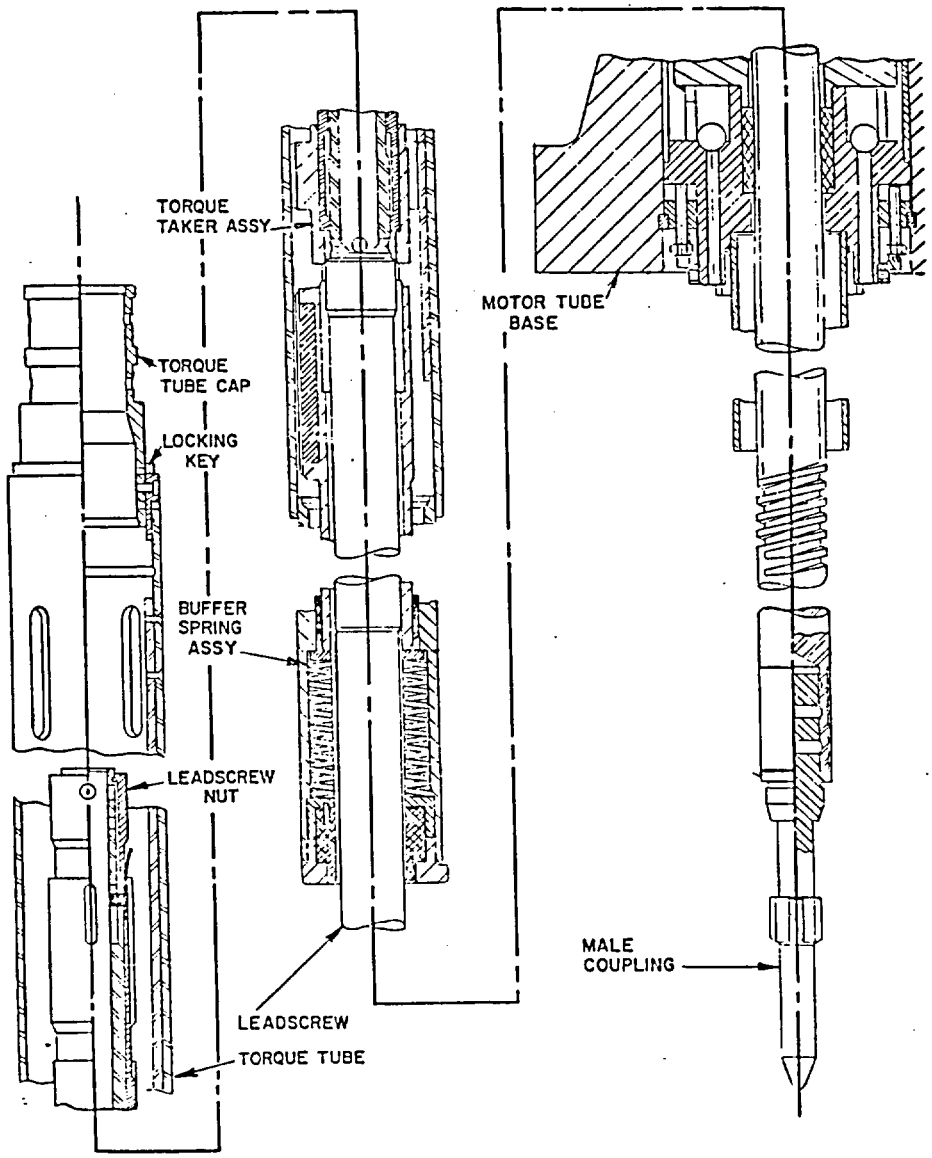

Figure 3.9 Torque Taker Assembly

b) *Lubricating Water:* The primary coolant serves as a hydraulic buffer and lubricant when the mechanism is tripped. The CRDMs should only be operated in the recommended temperature and pressure ranges, and when the total concentration of dissolved gas is less than 100 cc/kg. If the temperature or pressure exceed the limits, the CRDMs should be driven in and vented. The CRDMs also must be vented whenever the system has been drained and filled, to prevent the coolant from being displaced by gas.

c) *Electrical:* Excessive heat generation in the windings, which depends upon current flow and resistance, may result in stator damage. The control system is designed to limit heat generation by ensuring that only two phases are energized when the CRDM is stationary.

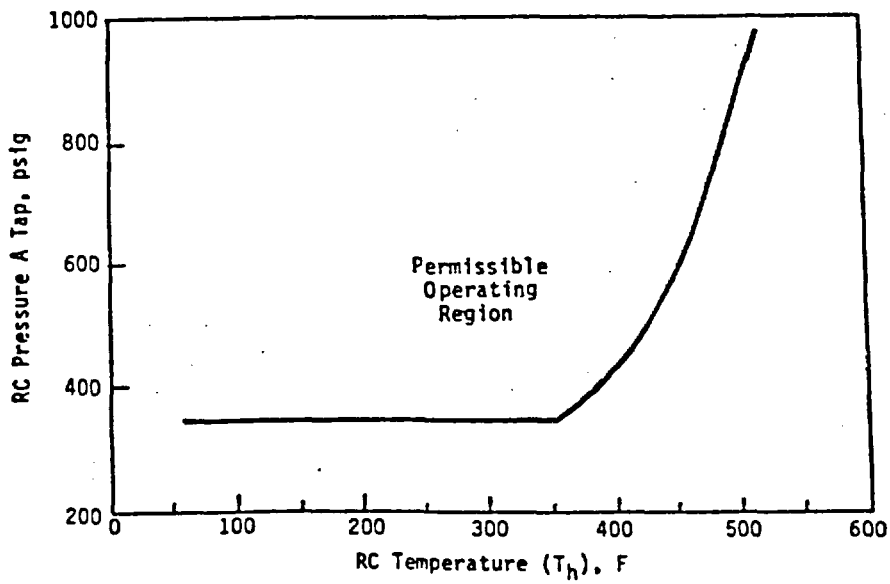

Figure 3.10 Minimum Allowable RC Pressure vs. Temperature for Tripping or Operating Control Rod Drives[16]

d) *Latching:* To ensure positive engagement between the roller nuts and the leadscrew, a latching sequence is required. Once the CRDM is energized, and before rod withdrawal begins, the CRDM is rotated in the "IN" direction for 15 sec. This rotation corresponds to one complete mechanical revolution of the roller nuts around the leadscrew. Since the motion does not place any weight on the roller nuts, the two components will properly engage.

3.4 Control Rod Drive Control System

The CRDM control system provides electrical signals to the motor assembly to insert, withdraw, or hold the CRAs in the core in response to automatic signals from the Integrated Control System (ICS) or manual signals. Reactivity is controlled through the positioning of the eight control rod groups. Four groups are designated as safety rods, three groups consist of regulating rods, and the eighth group consists of the axial power shaping rods. The particular number of CRAs per group depends upon the core cycle design (Table 3.5). The CRAs are arranged into groups at the control system patch panel.

During reactor startup, the safety groups are withdrawn first, enabling the regulatory groups to be withdrawn next. During a scram, all the groups, except the APSRAs, insert rapidly into the core.

The CRDM control system, schematically shown in Figure 3.11, consists of the control rod drive motor power supplies, system logic and trip breakers. There are four group power supplies, an auxiliary power supply and two holding power supplies. The group power supplies may be either a redundant, six-phase, half-wave rectifier or a three phase, full rectifier design. In each half of the group power supply, silicon controlled rectifiers (SCRs) are used to rectify and switch power. This switching sequentially energizes first two, then three, then two of the six CRA stator motor windings in stepping motor fashion to generate a rotating magnetic field (2-3-2-3 sequencing). Switching is achieved by gating the six SCRs on for the period each winding must be energized. Since each of the six windings use SCRs to supply power, six gating signals are required.

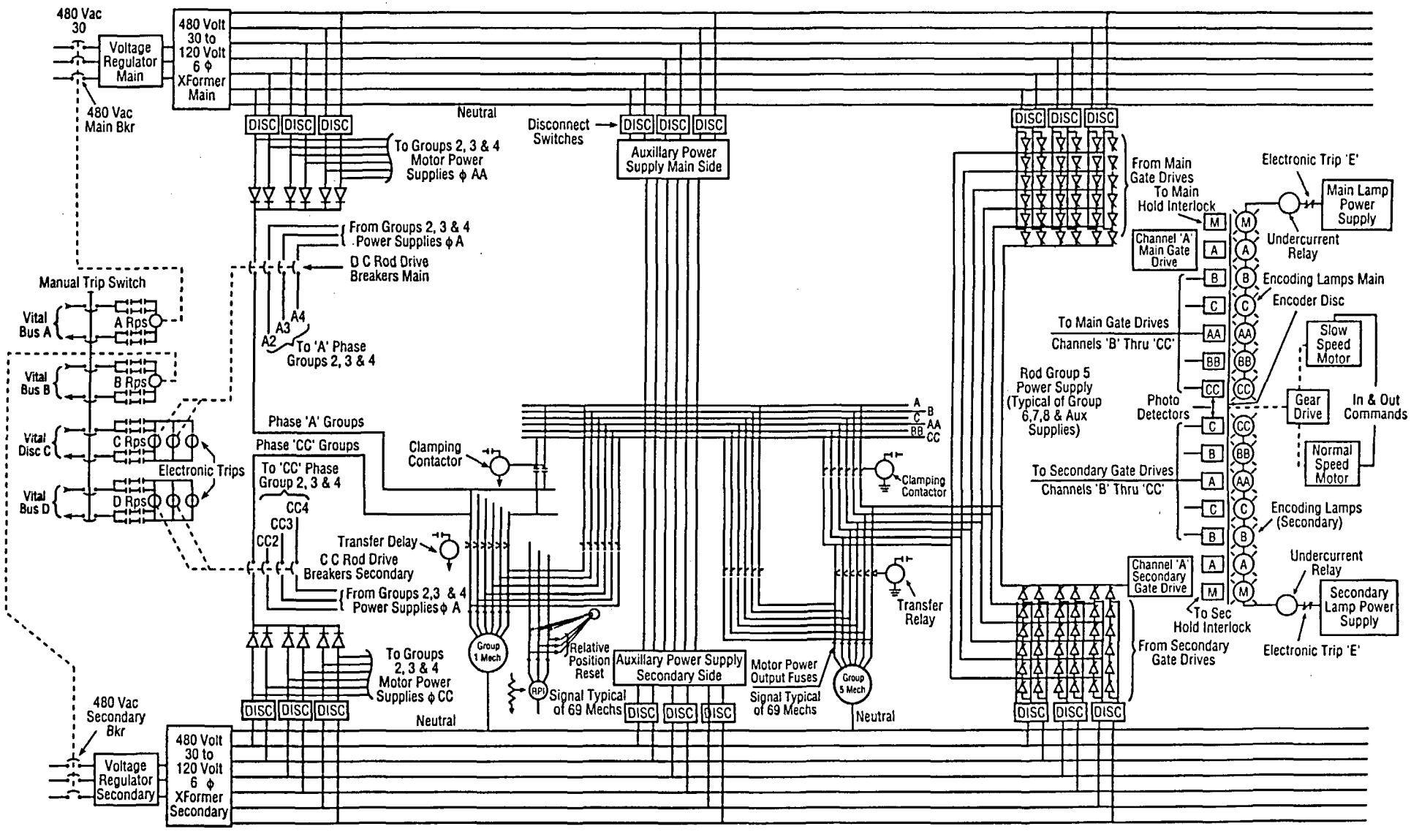

Figure 3.11 Control Rod Drive Control System Power Diagram

Table 3.5 CRA Grouping By Plant

Plant	Safety Rods Group				Regulating Rods Group			Axial Power Shaping Rod Group
	1	2	3	4	5	6	7	8
Arkansas-1	8	8	8	8	8	8	12	8
Crystal River	8	8	12	8	8	8	8	8
Davis-Besse	4	8	4	4	12	12	9	8
Oconee-1	8	12	9	12	12	4	4	8
Oconee-2	8	12	9	12	12	4	4	8
Oconee-3	8	12	9	12	12	4	4	8
Rancho Seco	4	8	8	8	12	12	9	8
Three Mile Island 1	8	12	9	12	12	4	4	8

The six phases of the stator are designated A, B, C, AA, BB, and CC. The A and AA, B and BB, C and CC windings are bifilar, with each pair in the same physical location in the stator (wound on top of each other). When energized, equal but opposite polarity magnetic fields produce two north and two south poles. This four pole magnetic field pulls the upper portion of the segment arms outward, causing the roller nuts to engage the leadscrew. When the CRDM is stationary, a maximum of two phases are energized, preventing heat damage to the stator.

The process of supplying overlapping sequential phase currents results in 12 mechanical steps for each electrical cycle. Two electrical cycles results in one rotor revolution, moving the leadscrew 0.75 inch. The speed and rotational direction of the magnetic field controls the speed and direction of CRA travel (Figure 3.12).

The programmer commands the SCR gating sequence in the programmed power supplies to produce the 2-3-2-3 sequencing. The programmer uses two split-phase drive motors, one which operates at 60 rpm resulting in a CRA speed of 30 in./min., and the other which runs at 6 rpm resulting in a CRA speed of 3 in./min.

The drive motors are coupled to an slotted optical disc (Figure 3.13), with redundant light sources on one side and photo-detectors on the other. As the drive motor rotates the disc, transparent windows pass in front of the light sources, activating the photodetectors in the desired 2-3-2-3 sequence. The output of each photodetector drives an optically coupled transistor switch in a 12 v dc gate drive circuit. The gate drive associated with a particular phase activates the SCRs for that phase. As the SCRs are gated, they rectify 120v ac and transmit it to the stators as 120 v dc. Thus, the 2-3-2-3 sequencing of the photodetectors results in the sequential energizing of the stator windings from the phases on the main feeder bus. In addition, some plants have modified the programmer by removing the optical disc and split phase motors and installed a microprocessor controlled programmer to generate the 2-3-2-3 sequencing signals which are input to the gate drive assemblies.

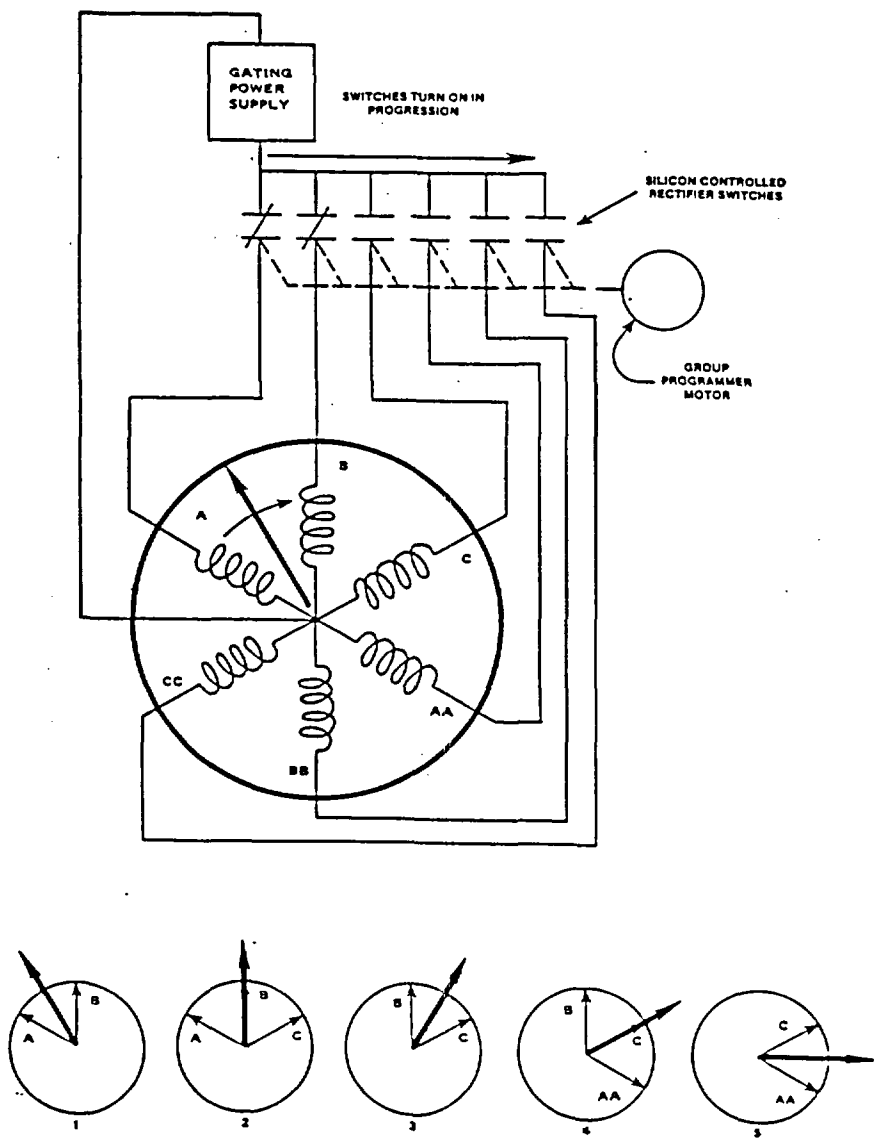

Figure 3.12 Rotating Magnetic Field

The seventh photodetector in the set energizes the 3-2 hold circuit. When the CRDM stops with three phases energized, this cell is activated, energizing a relay resulting in a jog-in signal to the programmer. When it steps back to the two phase energized position, the photodetector turns off, the relay is de-energized, and the motion stops.

With no motion command present, the programmer motors are prevented from rotating by applying 60 v dc instead of 120 v ac. If normal brake power were lost, 24 v dc is supplied through the direction error circuitry.

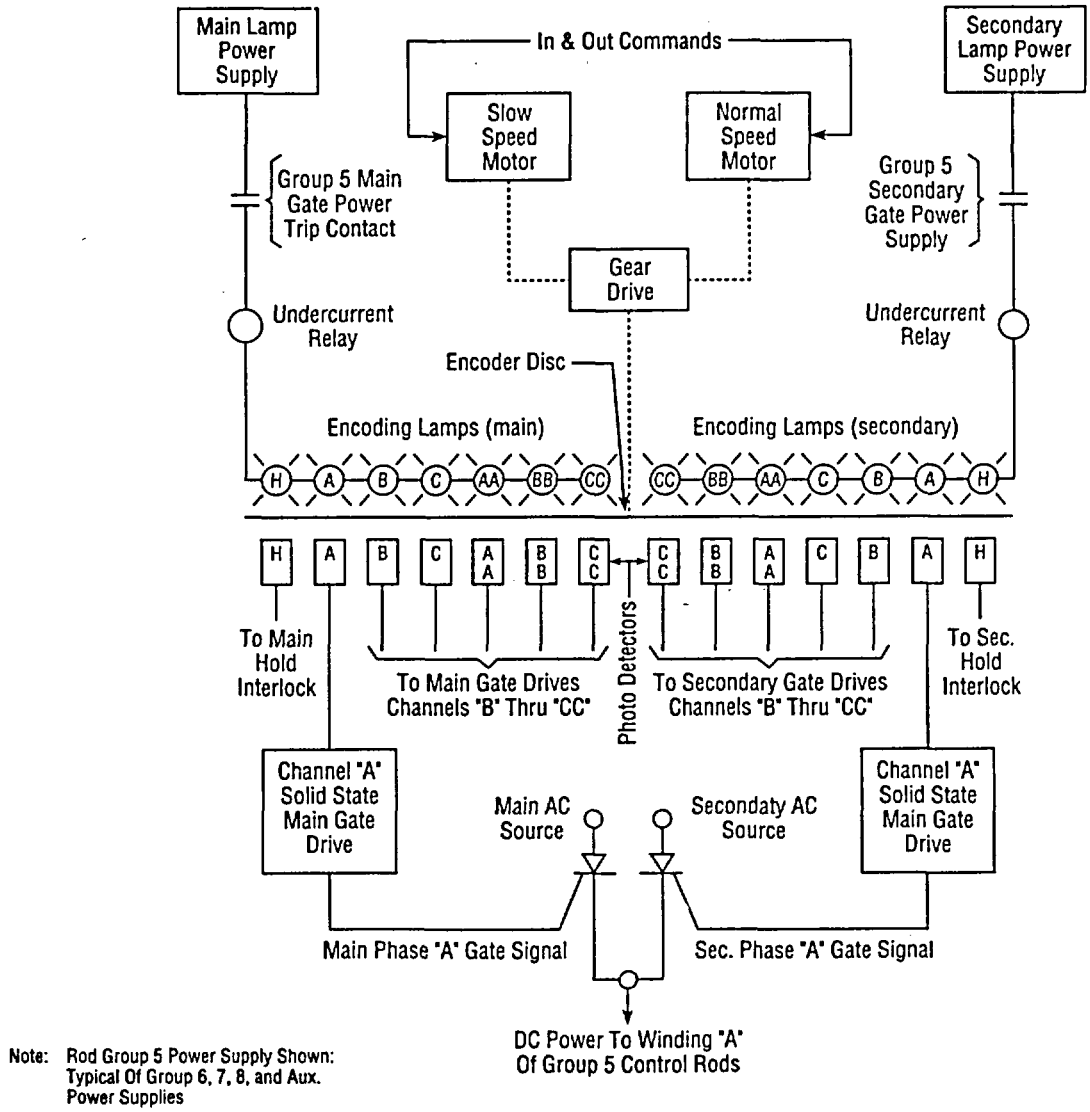

Figure 3.13 Control Rod Drive Regulating Power Supply Programmer

Identical power supplies are used for the regulating groups and for the auxiliary power supply. Each half of the group power supply is capable of driving 12 (max.) CRDMs. The power supplies have dual power inputs fed from separate power sources, each capable of carrying the full load.

Because the six-phase holding power supply is used to maintain the safety rods fully withdrawn, switching is not required. Two holding power supplies are used, each rated to supply power to one winding of the safety CRDMs.

The auxiliary power supply is used to position the safety rod groups and to control single rods The safety rods are positioned with the auxiliary power supply, and when in position, are transferred to

the holding bus. After positioning the safety rods, the auxiliary power supply is available to the regulating rods, through relays, to serve as a single rod repositioner, or as a spare group controller if required. The auxiliary power supply cannot be used to control more than one group at a time.

System logic encompasses the functions which command manual or automatic CRA motion, CRD sequencing, safety and protection features, and manual trip functions. The major components of the logic system are the operators control panel, CRA position indicator panels, automatic sequence and relay logic.

3.5 Rod Position Indication

Two methods of position indication are used, the relative and absolute position indication systems. The absolute position indication system monitors the position of the leadscrew through the reed switches. The relative position indication system monitors the input pulses to the CRDM motor to provide an indication of the demanded position.

3.5.1 Absolute Position Indication System

The Absolute Position Indication (API) System consists of 72 equally spaced, magnetically actuated, reed switches mounted in a fiberglass or aluminum housing strapped to the outside of the motor tube. These switches are actuated by the permanent magnet attached to the torque taker. As the reed switches sequence, the resistance of the network changes, resulting in a variable voltage output, corresponding to the actual rod position.

The API system also has two additional, individual reed switch groups which monitor:

- in, and out limits, and
- five zone reference switches at 0%, 25%, 50%, 75%, and 100% travel.

API signals are used to:

1) provide individual position indication on the position indication panel located in the control room,

2) determine group average position,

3) determine asymmetric rod indication,

4) determine group in and out limits,

5) indicate the first rod from a group in and out,

6) provide electrical signals to the sequence enable circuits,

7) provide electrical signals to the auto and out inhibit circuits, and

8) satisfy the feed and bleed permits.

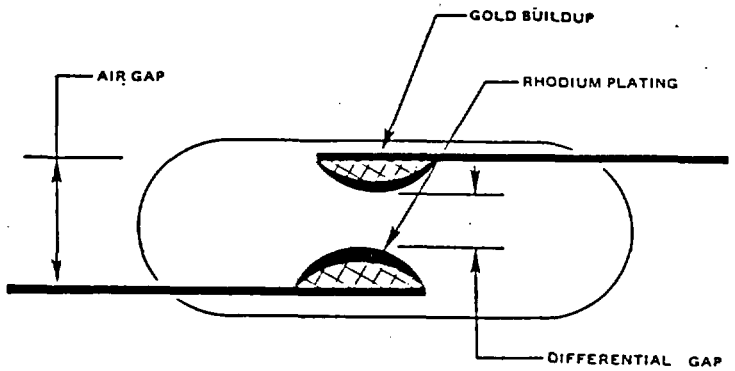

(b) LOW DIFFERENTIAL SWITCH

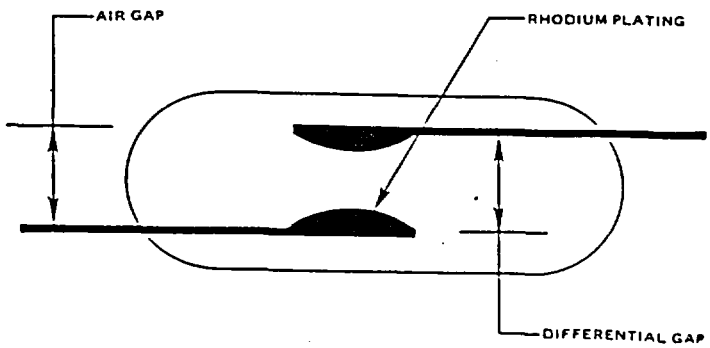

(a) HIGH DIFFERENTIAL SWITCH

Figure 3.14 Reed Switches

The current API system uses high differential reed switches (Figure 3.14) which are completely enclosed in glass, with rhodium plated contact surfaces. During the early 1980's low differential reed switches were used which incorporated gold plating on top of the rhodium plating. The failure rate and the erratic operation of these early switches, due to the buildup of contact surface film and the low closing force required from the decreased gap, necessitated the design change. These switches were also prone to fluttering in stray magnetic fields. The high-differential switches provided a greater positive contact due to the higher closing force, thus reducing surface film buildup.

Operating limitations also necessitated the redesign of the API system. The early Type A indicating circuits used a two channel averaging circuit. As the leadscrew moved, the reed switches closed in a 2-1-2-1 sequence. A failed open reed switch produced an erroneous dropped rod indication and initiated an automatic runback to 60% power resulting from the asymmetric fault condition. If any of the forty-eight reed switches failed, the entire assembly had to be replaced because the failed switch could not be bypassed.

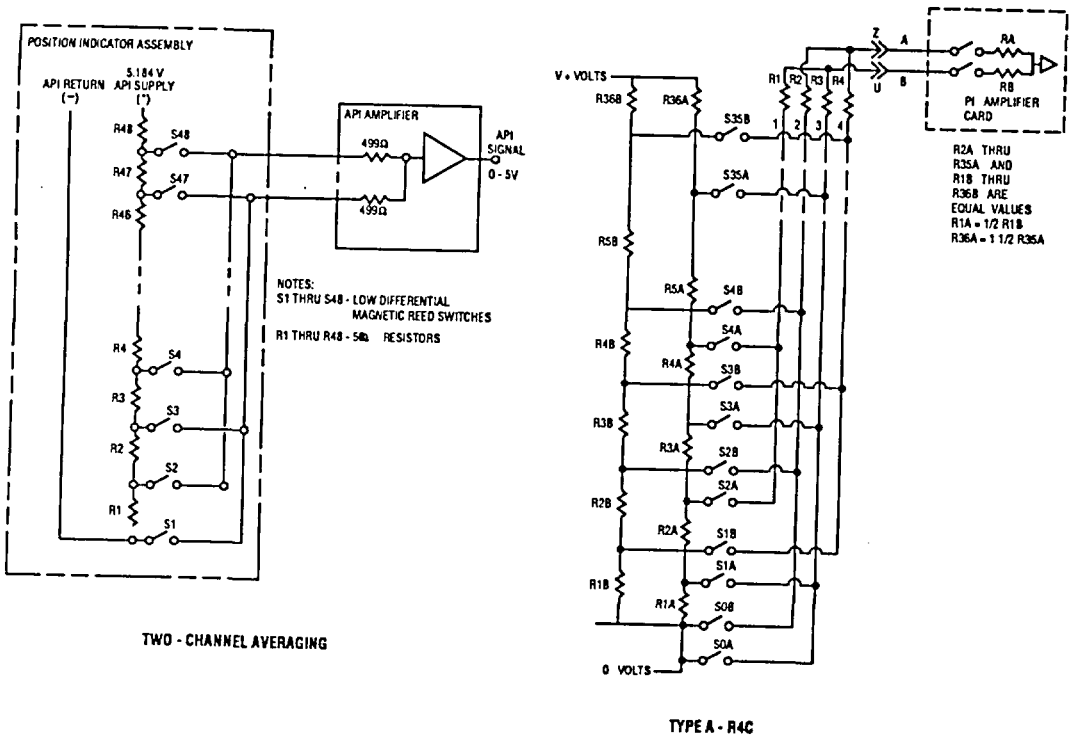

Figure 3.15 Absolute Position Indication (API)

The new circuit design (Type A-R4C), has two parallel sets of voltage divider circuits, comprised of 36 resistors, each connected in series. A 5 volt dc power supply is connected across the two circuits, such that 5 volts (at the top end of the circuit) represents the full-out rod position, and 0 volts (at the bottom end of the circuit), represents the full-in position for the rod. The reed switches for each circuit are offset such that they are staggered. One end of the 36 reed switches are connected at a junction between each of the resistors of the two parallel circuits. The other end (output) of the switches are alternately connected to 4 internal output signal lines. These signals are selectively averaged to form two output signals. Both circuit designs are schematically shown in Figure 3.15.

The Type A-R4C API is designed such that either 2 or 3 reed switches are closed in the vicinity of the magnet. Each time a reed switch closes or opens as a result of magnet movement, an analog signal representing rod position is displayed on the position indicator monitor in the control room. The number of switches which are closed, and the length of time they are closed during leadscrew travel, are contributing factors to the accuracy of the API output signal. Another feature of this design is the isolation switches mounted on the API amplifier card. These switches, when open, prevent the signal from their respective output channels from being sent to the buffer amplifier.

The In limit, Out limit, 0%, 25%, 50%, 75%, and 100% reference reed switches for the Type A-R4C API have the same pickup and dropout sensitivity and accuracy as the original Type A API. The percentage switches use the same circuitry. The In limit and Out limit circuits for the Type A-R4C API consist of two reed switches, connected in series, to ensure that those circuits open when the magnet is moved from either limit position.

The redundancy introduced into the Type A-R4C circuit compensates for component failure. The operating history for the Type A API demonstrated that the major component failure was the failure of the reed switch to function properly. The predominate mode of failure was the inability of the reed switch to close (pick up) in the presence of the magnetic field produced by the leadscrew magnet. The reed switch would also occasionally stay closed (not drop out) when the magnetic field was absent.

In the new R4C design, the reed switches are sequentially activated so that position indication is provided when a single reed switch fails to close without an asymmetric rod condition. Position signal is lost only when two or more adjacent reed switches fail to close. This results in an asymmetric alarm, but not sufficient to initiate a runback. The three-channel operation allows the failure to be located, isolated, and bypassed. The faulty reed switch may be isolated by opening the proper Amplifier Card isolation switch.

The Type A API has a signal accuracy of +/-2 inches. The Type A-R4C API has a signal accuracy of +/-2.5 inches when both output channels are operating, and +/-3.5 inches when one output channel is operating.

3.5.2 Relative Position Indication System

The Relative Position Indication (RPI) (Figure 3.16) provides an indication of the demanded CRA position. A pulse stepping motor is connected in parallel to the A,C, and BB phases supplying the CRDM. As the phases are energized, the stepping motor turns, driving a potentiometer which produces a variable output corresponding to the demanded position. If a rod is dropped, tripped, or stuck, the stepping motor continues to operate, resulting in an inaccurate position indication. In these instances, the operator uses the reset pulser to drive the desired rod or group pulse stepping motor with a pulsed 24 V dc signal rather than with the normal three phase input. This produces the correct RPI indication without the motion.

Individual rod RPI is displayed on the position indication panel in the control room. However, the primary use for the RPI is sequence monitoring. The sequence monitor performs the following:

- checks for overlap between the regulating groups,
- checks for excessive overlap,
- checks for greater than 25% overlap at discrete intervals, and if found, generates a sequence fault signal.

3.6 Control Rod Drive Mechanism Cooling System

The Control Rod Drive Mechanism Cooling System is a closed system consisting of two redundant trains. The major system components are two centrifugal pumps, two heat exchangers, and a surge tank. The pumps provide cooling water to a common supply header which supplies the stator cooling lines. The coolant discharges to a common discharge header and is cooled by the heat exchanger.

The separate cooling loops are fabricated entirely of stainless steel, with the exception of the copper-nickel cooler tubes. The latter reduce the concentration of ferrous particles in the cooling water, which limits the potential for flow blockage resulting from the attraction of the ferrous particles by the magnetic field produced in the stator.

The cooling water system typically is operational during normal reactor operations only. Forced air cooling is also supplied to the top of the reactor vessel head to supplement CRDM cooling.

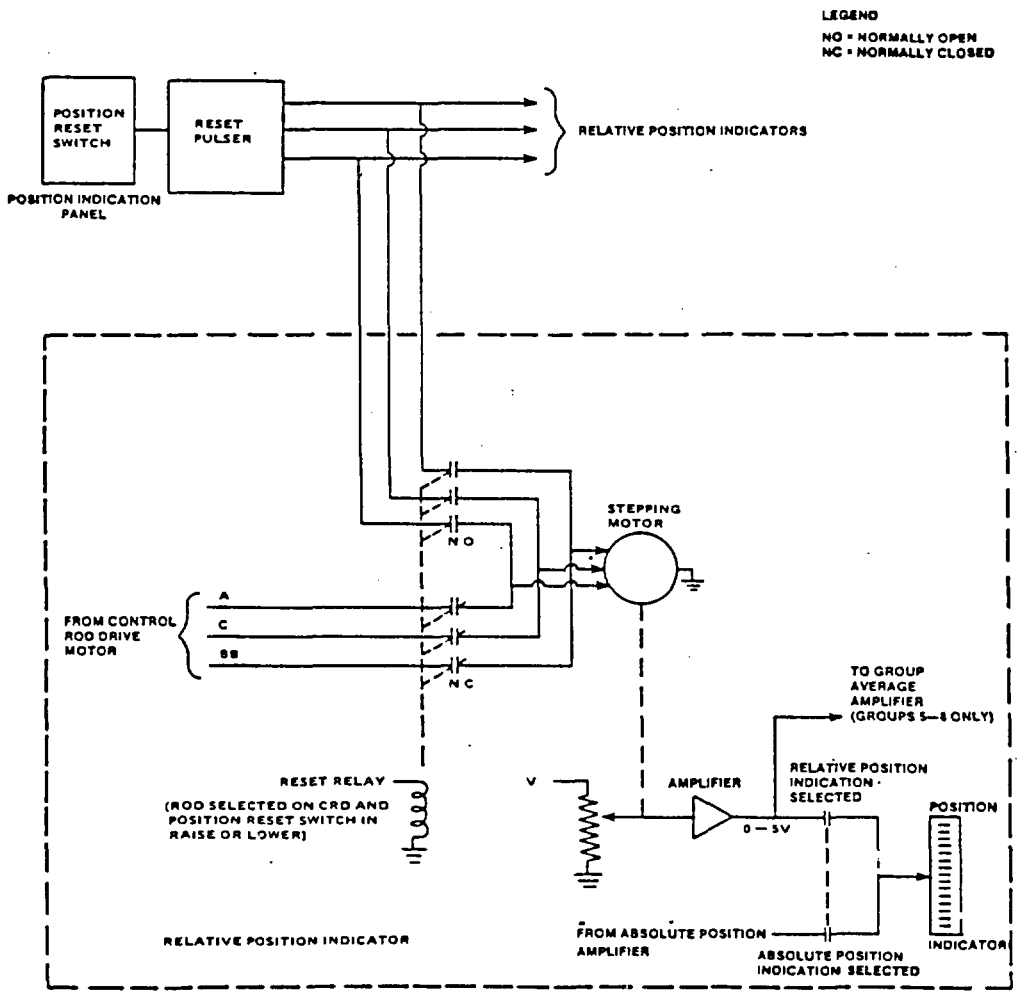

Figure 3.16 Relative Position Indication

4. OPERATING AND ENVIRONMENTAL STRESSES

The B&W and CE CRD systems are subjected to a variety of operating and environmental stresses, which, over the design life of the components, may lead to age degradation. Common mechanical stresses include wear, fatigue, vibration, and corrosion. Electrical stresses result from arcing, power surges, electrical noise and drift. Temperature, radiation, and humidity are common environmental stresses. Externally induced stresses, such as abnormal operating conditions, improper or excessive maintenance, testing, and human error may also result in component and system aging. These stresses, acting in combination tend to produce greater synergistic effects than if they were acting individually.

The design and the location are primarily responsible for determining which stresses affect individual system components. The drive mechanisms and rod position indication systems, which are located on top of the reactor vessel, are subjected to severe operating and environmental conditions. The components of the power and control systems, in comparison, are located in a more controlled environment outside of the containment.

Aging failure mechanisms result from the long-term exposure to operating, environmental, and external stresses. Component degradation results in a decrease in physical properties and functionality, affecting the component, system, and plant safety. This section describes the individual operating stresses and the aging effects for the major CRD system components. A qualitative assessment on the probability of the individual stresses affecting the major components is also provided. Though both the B&W and CE CRD systems are mechanically different, the actual stresses and aging effects are equivalent.

4.1 System Operating Stresses

The following stresses affect the B&W and CE control rod drive systems during operation. These stresses, acting individually or in combination, may significantly degrade the components.

- *Mechanical Wear:* The physical interaction between the system's components produces significant frictional forces. Over time, these forces may cause material wear, galling, or fretting. Control rod and guide tube fretting is an example of the wear caused by coolant flow induced vibration.

- *Cyclic Fatigue:* Cyclic fatigue results from the application of repeated loads. During the design life of the CRDM, both high and low cycle fatigue occurs which can initiate cracks resulting in component failure. Repeated thermal and mechanical loadings result in low cycle fatigue which affects the material in the plastic region. High-cycle fatigue results from vibration due to high-frequency loading at low amplitudes.

- *Debris and Crud:* Debris and crud in the reactor coolant may be transported and deposited throughout the primary system, including the CRDM and guide tubes. This debris may become trapped in the components, preventing the full insertion of the control rods or result in immovable drive mechanisms. Crud may also accumulate on the CRA latching mechanisms, increasing the force required to couple or decouple it from the CRD.

- *Reactor Trip:* Plant trips result in rapid temperature and pressure excursions. These transients are capable of inducing stresses on the CRDM, control rods and spider assemblies. Trips also present a challenge to the other plant safety systems which may contribute to age degradation.

- *Boric Acid Corrosion:* Primary coolant leakage in high temperature areas, such as the reactor vessel head, may cause the boric acid to boil, increasing its acidity and corrosiveness. Boric acid crystals may accumulate and block the cooling passages for the stator coils, resulting in overheating, increased thermal stresses, and component failure for the air-cooled CE CEDMs.

- *Electrical Surge:* Electrical transients, resulting from disturbances in the current supplied to electrical components, can cause load changes, system faults, and component failures.

- *Electrical Noise and Drift:* Electrical noise and drift can produce electrical circuit perturbations. If not detected and corrected in a timely manner, aging degradation or component failure may occur.

- *Electrical Arcing:* Electrical arcing, primarily due to the presence of moisture or insulation degradation, may produce localized stresses, leading to component failure or degradation.

- *Vibration:* Vibration caused either by CRDM operation or coolant flow, can cause physical motion of the components. This displacement may eventually cause wear, crack initiation and growth, galling, and component failure.

- *Maintenance:* Normal, regularly scheduled maintenance, designed to maintain system operability may induce stresses on various components. The maintenance performed at each refueling outage is a typical example. The power and instrumentation connections, which must be removed at each refueling, may cause connector wear or fatigue resulting in failure.

- *Testing:* To ensure the operational readiness of the CRD system to perform its safety functions, regular system testing is required. These tests range from actual drop-time testing of control rods, to electrical checks for the power and control components, and result in a significant amount of testing conducted during a components lifetime. The characteristics of the test itself, such as meggering, may be deleterious. Mechanical stresses induced from making and breaking electrical connections, can cause it to degrade, affecting the conduction capabilities, which may lead to eventual component failure.

- *Human Error:* To maintain the operational readiness of the system, numerous tests and inspections are performed. Human error in performing these tests may cause significant mechanical and electrical stresses, accelerating age degradation. The significant effects resulting from such errors include dropped rods and plant scrams.

4.2 Environmental Stresses

The primary environmental stresses which affect the CRD system and components are temperature, humidity, and radiation. Operational experience demonstrates that both systems are susceptible to environmental stresses.

Plant location is the main factor which determines the degree to which system components will be affected by environmental stresses. The power and control cabinets, located outside the containment, are generally not exposed to extreme environmental conditions. However, if the electrical cabinet ambient conditions are not controlled and monitored, localized overheating and component failures may occur. The CRDM and power cables located in containment, and are exposed to extreme environmental stresses, which have been demonstrated to cause system failures.

- *Temperature:* Temperature is the dominant environmental stress for the CRD system. Cabinet temperature must be controlled by a forced air system to ensure proper operation of the modularized power and control components. Cooling system malfunctioning can result in localized component overheating and failure.

  High temperature may lead to material degradation of the pressure housing and cables located inside containment. Thermal embrittlement of cast Type 304 stainless steel may occur in the reactor environment. The thermal gradients which occur as a result of reactor trips may also contribute to low cycle fatigue. CRDM coil and power cable insulation deteriorate in a high temperature environment, resulting in electrical shorts, dielectric property changes, and decreases in material strengths. Gaskets, which serve as the primary coolant seal, may also become brittle and crack at high temperatures.

- *Humidity:* The containment atmosphere above the reactor pressure vessel head is very humid. Electrical components located in this area may experience degradations in dielectric properties of insulating materials, decreasing electrical insulation integrity, resulting in electrical shorts in the CRDM coils. Moisture may also corrode connector surfaces, interfering with the circuit current flow and component operation.

- *Radiation:* For CRD components located outside the containment, radiation is not a severe degradation mechanism. However, for the CRDM leadscrew, spider mechanism, and power cables, long-term radiation exposure may present significant stresses. Cables and connectors experience decreases in dielectric and strength of insulating materials in a high radiation field. Also, any components fabricated from cast 304 stainless steel are susceptible to irradiation assisted stress corrosion cracking.

4.3 Effect of Operating and Environmental Stresses on System Components

As discussed in Sections 2.0 and 3.0, the main sub-systems of the CE and B&W CRD system are the control rod assemblies, drive mechanisms, rod position, and control systems. Each system is comprised of individual components, fabricated from a variety of materials, which perform different functions. The effect of a particular stress upon each is a function of the intensity, frequency, duration of stress, and material strength.

This section describes the individual operating and environmental stresses which affect the control rod drive subsystems and components. The potential degradation mechanisms and failure modes caused by these stresses are summarized in Tables 4.1 and 4.2 for the B&W and CE systems, respectively.

- *Control Rod Assemblies (B&W and CE):* For both the B&W and CE systems, the control rod assemblies consist of the spider assembly and the individual absorber rods. The spider assemblies for each design maintain the control rods in the proper pattern for insertion into the fuel assembly guide tubes. The primary difference between the B&W and CE control rod is the that the CE absorber rod is a larger diameter, and consequently, stiffer. During plant operation, the rods vibrate which can result in cladding wear, and through wall guide tube cracks as experienced at several CE plants (Section 5.1.1). Control rod cracking may also be caused by other operating stressors such as IGSCC, thermal and pressure fluctuations, and radiation induced poison swelling.

Table 4.1 Babcock & Wilcox Control Rod Drive System Potential Degradation Mechanisms and Failure Modes

Subsystem/Component	Material	Potential Degradation Mechanism	Potential Failure Mode
I. Control Rod Assembly			
a. Control Rods	Type 304 Stainless Steel Clad Ag-In-Cd Poison	Stress Corrosion Cracking Mechanical Wear	Clad Cracking Poison Wash-Out
b. Spider	Grade CF3M Stainless Steel	Stress Corrosion Cracking Mechanical Wear, Radiation Embrittlement, Fatigue	Surface Cracks Dropped Rod
c. Fuel Assembly Guide Tube	Zircaloy-4	Mechanical Wear	Tube wall cracking Tube wall wear
II. Control Rod Drive Mechanism			
a. Motor Tube	Inconel clad with low allow steel	Thermal Embrittlement, Corrosion, Fatigue Cracking	Housing Crack, Primary Coolant Leaks
b. Rotor Assemblies (roller nuts, segment arms, springs)	Stellite Ni-Cr-Fe Alloy, Type 403 Stainless Steel	Mechanical Wear, Fatigue, Debris/Crud Buildup	Dropped CRA, Immovable CRA
c. Leadscrew	17-4 PH Stainless Steel	Mechanical Wear, Fatigue, Stress Corrosion Cracking	Dropped CRA, Immovable CRA, Inoperable Locking Mech.
d. Stator Coils	Copper Wire, Dow Corning 997 Varnish, Kapton, Nomex, Silicone Rubber,	Corrosion, Mechanical Wear, Insulation Degradation, Contamination	Dropped Rod, Electrical Short, Voltage Variation
e. Vent Valve	Stainless Steel, O-rings	Corrosion Buildup, Mechanical Wear, Fatigue, Thermal Embrittlement	Inoperable Valve, Primary Coolant Leak
III. CRDM Control System	Elec. Power Supplies, Semiconductors, SCR's, Cables, Connectors, Circuit Boards	Corrosion, Fatigue, Mechanical Wear, Thermal Degradation, Contamination	Dropped CRA, Spurious CRA Movement, Inoperable Rods, Electrical Signal Drift
IV. Rod Position Indication Systems	Reed Switches, Stepping, Motor, Wiring, Cables, Connectors, Circuit Boards, Insulation, Semi-Conductor Devices, Electro-Mechanical Components	Corrosion, Fatigue, Mechanical Wear, Thermal Degradation, Radiation Degradation, Vibration, Insulation Degradation, Contamination	Loss of Position Indication, Spurious Position Indication

Table 4.2 Combustion Engineering Control Element Drive System Potential Degradation Mechanisms and Failure Modes

Subsystem/Component	Material	Potential Degradation Mechanism	Potential Failure Mode
I. Control Element Assembly			
a. Control Element Rods	Inconel Clad B_4C and Ag-In-Cd Poison	Mechanical Wear, Crack Formation	Clad Cracking, Poison Wash Out
b. Spider	Stainless Steel	Mechanical Wear, Radiation Embrittlement, Fatigue, Cracking	Surface Cracks, Dropped Rod.
c. Fuel Assembly Guide Tubes	Zircaloy-4	Mechanical Wear, Through Wall Crack	Tube Wall Cracking Tube Wall Wear
II. Control Element Drive Mechanism			
a. Motor and Pressure Housing Assemblies	Type 316 and 403 Stainless Steel Ni-Cr-Fe Alloy	Thermal Embrittlement, Corrosion, Fatigue Cracking	Housing Crack, Primary Coolant Leaks
b. Motor Latches, Links, and Pins	High Cobolt Alloy	Mechanical Wear, Fatigue, Debris/Crud Deposition	Dropped CEA, Immovable CEA
c. Extension Shaft	Type 304 Stainless Steel, Chromium Plated	Wear, Fatigue, Stress Corrosion Crack	Locking Mech. Oper. Difficulty
d. Magnet Coils	Copper Wire, Varnish, Fiberglass tape, Silicone	Corrosion, Mechanical Wear, Insulation Degradation, Electrical Shorts	Dropped CEA, Slipped CEA, Immovable CEA
e. Vent Valves	Type 440 Stainless Steel Type 316 Stainless Steel Seat	Corrosion Buildup, Mechanical Wear, Fatigue, Thermal Embrittlement	Inoperable Valve, Primary Coolant Leak
III. CEA Control System	Power Switches, Detectors, Relays, Cables, Connectors, SCR's	Corrosion, Fatigue, Mechanical Wear, Thermal Degradation, Electrical Noise Drift	Dropped CEA, Spurious CEA Movement, Inoperable CEA
IV. Rod Position Indication System	Reed Switches, PC Boards, Cables, Connectors, Thermocouples Electrical Wiring, Insulation, Semi-Conductor Devices, Electro-Mechanical Devices.	Corrosion, Fatigue, Mechanical Wear, Thermal Degradation, Radiation Degradation, Vibration, Insulation Degradation	Loss of Position Indication Signal, Incorrect Position Signal, Spurious CEA Movements, Erroneous Core Penalty Factors

- *Spider Assemblies (B&W and CE):* The spider assembly is subjected to numerous stresses while located in the upper internal area of the reactor core. Flow induced vibrations from core coolant flow cyclic fatigue, variations in water chemistry and thermal stresses from reactor trips are all potential causes of spider degradation. Another potential source of mechanical stress is system maintenance. The coupling and uncoupling of the spider assembly from the leadscrew may contribute to wear of the coupling mechanism. Corrosion and crud from the fuel and other reactor internals may become lodged in the coupling mechanism, increasing the mechanical force required to uncouple the CRDM from the control rod assembly.

- *Control Rod Drive Mechanisms (B&W and CE):* The positioning of the control rod drive mechanisms on the top of the reactor vessel head expose it to numerous stresses which may produce aging. These stresses may result in degradation which prevents the CRDM from performing as designed. The two major pressure housing failures which are possible include a crack resulting in a small break LOCA, and jamming of the drive mechanism, so it is inoperable and unable to insert the rods upon demand. The stresses which affect major subcomponents are identified below. All of the CRDM subcomponents which are exposed to the primary coolant are fabricated from corrosion-resistant stainless steel or Inconel.

- *Motor Housing (B&W and CE):* The pressure housing forms part of the reactor system pressure boundary between the coolant and the containment. The CE housing is fabricated from Type 403 stainless steel with Inconel end fittings, with the upper pressure housing fabricated from Type 316 stainless steel. The Babcock & Wilcox motor tube is a three piece welded assembly with either stainless steel or a low alloy steel motor tube wall clad on the ID with an Inconel center section. The lower end is welded to a stainless steel forging. Any cast stainless steel CRDM housings which are still in use are susceptible to thermal embrittlement, which can cause a decrease in the fracture toughness leading to crack formation. These cracks may result in primary coolant leakage. Transgranular stress corrosion cracking caused by the chlorides and sulfates contained in the coolant may also induce stress corrosion cracking. Vibration from normal plant operation may also be transmitted to the pressure housing. Continuous vibration may result in low cycle fatigue enhancing crack propagation.

- *Leadscrew Assembly and Extension Shaft (B&W and CE)*: The B&W leadscrew and CE extension shaft assemblies provide a means for control rod/spider attachment which permits the positioning of the control rods in the core. The B&W leadscrew uses a modified ACME thread which allows the roller nut to engage without lifting the screw. CE uses a Type 304 stainless steel drive shaft with notches machined along the OD. The main stressor arises from the continuous mechanical interaction with the gripper or roller nut during operation. Because the leadscrew assembly is exposed to the primary coolant, any crud or debris in the coolant can be transported to the CRDM internals, which may jam and prevent movement of the leadscrew. Crud may also accumulate in the spider locking mechanism at the lower end of the leadscrew resulting in a greater mechanical force required to decouple the leadscrew and the spider. The coupling mechanism is exposed to a greater radiation fluence than the other system sub-components, due to its close proximity to the fuel. This cumulative radiation exposure should be monitored or calculated to ensure that the IASCC threshold of 5×10^{20} nvt has not been exceeded (as described in Section 5.2.2).

- *Rotor and Motor Assemblies (B&W and CE):* The Combustion Engineering gripper assembly utilizes a series of mechanical latches (typically three) to raise, lower, or hold the control rod drive shaft in response to signals from the operator or control system. These latches are

fabricated from a high cobalt alloy to minimize wear. The B&W rotor assembly consists of a rotor tube supported by ball bearings, which contains two arms carrying a pair of roller nut assemblies. Mechanical stress resulting in wear may occur since physical contact is continuously maintained between these components during normal operations. These components must be able to move freely. The latches and roller nuts are susceptible to a buildup of crud and debris which may cause them to jam. While this may not prevent operation, a greater mechanical force will be required to overcome the interference. Cyclic fatigue is also a stressor due to the repetitive nature of the latching operation.

- *Stator Coils (B&W and CE):* Both designs use dc coils to supply the magnetic force to actuate the latches or roller nuts. The CE coil stack assembly consists of five coils located concentrically to the pressure housing. The coils are fabricated from round copper wire, insulated with a high pressure enamel, and vacuum impregnated. The coil is then wrapped with fiberglass tape and a silicone compound. The finished coils are contained in a nickel plated steel housing. The B&W coils consist of six phases in the same physical location in the stator (wound on top of each other). The windings are either bifilar or monofilar, and six phase star connected. The stator assembly is surrounded by a cooling water jacket. Thermal stresses from continued operation or localized overheating may affect the operation of the coils. The forced air and water cooling system is designed to maintain the coils below approximately 350°F. High ambient containment temperatures and insulation degradation could result in localized stator temperatures exceeding this limit resulting in electrical shorts. Power is supplied to the coils through cable connections on the top of the CRDM. Normal maintenance which requires connecting and disconnecting these cables during refueling may cause connector wear and damage. This could interfere with the power supplied to the coils, affecting the magnetic field, resulting in improper latch operation. Boric acid corrosion from primary coolant leaks or spills is also a major stressor. The corrosive effects may degrade the insulation, leading to electrical shorts, which could result in dropped rods.

- *Vent Valve (B&W and CE):* The vent valve, located on the top of the pressure housing, is used primarily to vent the non-condensible gases in the upper portion of the housing. Combustion Engineering uses a ball-seat type of vent, while B&W typically uses a vent plug and o-ring design. The mechanical stresses from the repeated vent valve operation have caused mechanical wear and galling, o-ring deterioration, and primary coolant leakage. The same low-cycle fatigue and vibration which may affect the pressure housings also affect the vent valve. The vent valve is also susceptible to improper maintenance induced damage. The high temperature and radiation environment may cause o-ring embrittlement and failure. Spring relaxation may also result in insufficient closure force resulting in leakage.

- *CRD Control System (B&W and CE):* The control rod drive control system consists primarily of cabinet mounted electronic components necessary to convert the main power supply to the pulsed dc power necessary to power the main coils. The logic circuitry controls the sequence of the power to the coils in order to produce the proper actuation of the latches or roller nuts. Temperature, humidity, electronic noise and drift, vibration, and human error may significantly affect this subsystem. Forced air cooling is provided in the cabinets to dissipate the heat generated by the electronic components. The ambient temperature around the cabinets must also be controlled. Any increase in temperature, either within the cabinet or outside, may cause degradation and failure. Electrical noise or drift, due to component aging is also detrimental to the operation of the system. Vibration from the plant surroundings may be transmitted through the mountings to the equipment, causing movement of the internal components, which may

resulting in age degradation. Human error and improper system maintenance may also cause significant mechanical stresses. Operational effects resulting in component failure, such as dropped rods or plant scrams, may result from these failures.

- *Rod Position Indication Systems (B&W and CE):* Both the B&W and CE CRD systems use two independent systems to provide rod position indication. The absolute position indication system utilizes magnetic actuated reed switches, which when closed, provide a voltage corresponding to rod position. The second system is a relative position indication system, which monitors the pulses supplied to the CRDs, providing demanded rod position. Because the reed switches for the absolute position indication system are located in a tube adjacent to the motor tube, they are subjected to the same operating and environmental stresses as the CRDM. Opening and closing the switches may cause the contact surface wear, and over time, fatigue degradation. Vibration transmitted through the housing from CRDM operation may also induce mechanical stresses affecting switch calibration. Like all electronic equipment, excessive temperature and humidity may interfere with the proper operation of the equipment. Signals from the reed switches are transmitted through the cables and connections mounted on top of the housing. Primary coolant leakage would expose these cables and connectors to the corrosive effects of boric acid which would interfere with the signals transmitted and degrade the cable insulation. Electrical noise and other interference can cause the CE and B&W relative position indication systems to produce anomalous signals. Deterioration of the cable and connectors from vibration, heat, radiation, and maintenance errors will also degrade the system.

4.4 Aging Stressor Tables

Tables 4.3 and 4.4 provide a qualitative evaluation of the significance of each of the operational and environment stresses which were discussed in this section and summarized on Tables 4.1 and 4.2. These Tables also highlight the areas where predictive maintenance may be applied. This aging stressor evaluation is based upon an engineering analysis of the component materials, design, environmental and operational conditions, and the operating experience for each CRDM. Generally, a "high" (H) ranking indicates that operating experience supports the assessment, while a "low" (L) ranking indicates that neither operating experience nor the engineering design analysis provide evidence to warrant this stressor being an important aging concern. A "medium" (M) ranking represents a moderate aging effect resulting from a particular operating or environmental stress.

Table 4.3 Babcock & Wilcox CRD System Stress Summary

Component	Operating Stresses												Environmental Stresses			Potential Aging Mechanisms								
	Mech. Wear	Cyclic Fatigue	Debris/Crud	Reactor Trip/Scram	Boric Acid Corr.	Electrical Surge	Maintenance	Testing	Human Error	Elec. Noise & Drift	Elec. Arcing	Vibration	Radiation	Temperature	Humidity	Wear	Corrosion	Stress Corr. Cracking	Fatigue	Thermal	Irradiation	Insul. Degrad.	Erosion	Fatigue Crack Growth
CRA Cont. Rods	L	M	H	L	L	na	L	L	L	na	na	M	M	L	L	M	L	H	M	L	M	na	L	M
Spider	M	H	M	L	L	na	L	L	L	na	na	M	M	L	L	M	L	M	M	M	M	na	L	M
CRDM Motor Tube	L	M	L	M	H	na	L	L	M	na	na	L	M	M	M	L	M	M	M	M	M	na	L	M
Flexatallic Gasket	M	L	H	L	H	na	M	L	M	na	na	na	H	H	L	H	H	na	na	H	H	na	L	na
Coils	L	M	na	L	H	H	M	M	M	na	H	L	M	H	H	L	H	na	L	H	M	H	na	na
Vent Valve	H	M	H	L	H	na	H	L	H	na	na	L	M	M	L	M	H	M	L	M	M	na	L	L
Leadscrew	M	M	H	L	L	na	L	L	L	na	na	L	H	M	L	M	L	L	L	M	M	na	M	M
Rotor Assy	M	M	H	L	L	na	L	L	L	na	na	L	M	M	L	M	L	L	L	M	M	na	L	L
Torque Taker	M	M	H	L	L	na	M	L	M	na	na	L	M	M	L	M	L	L	L	M	M	na	L	L
Snubber	M	M	H	L	L	na	L	L	L	na	na	L	M	M	L	M	L	L	L	M	M	na	L	L
Leadscrew Guide	L	M	H	L	L	na	L	L	L	na	na	L	M	M	L	L	L	L	L	M	M	na	L	L
Rod Post. Ind. Reed Switch	M	M	na	L	M	M	L	L	L	M	L	M	M	M	M	L	M	na	M	M	M	M	na	L
Cable & Conn.	L	H	na	L	H	H	M	M	M	M	M	M	H	H	M	L	H	na	M	H	H	H	na	na
Electronics	na	M	na	L	M	H	L	M	M	M	M	M	M	M	M	na	M	na	L	H	M	M	na	na
CRD Control Sys SCR	L	M	na	L	na	H	L	M	M	M	L	M	L	M	M	L	na	na	M	H	na	na	na	na
Power Supp.	na	M	na	L	na	H	M	M	M	H	M	M	L	M	M	na	na	na	L	H	na	na	na	na
Programmers	M	M	na	L	na	H	L	M	M	M	L	M	M	L	M	na	na	na	M	H	na	na	na	na

Legend:
- H = High probability that stress or aging mechanism will cause component degradation.
- M = Medium probability that stress or aging mechanism will cause component degradation.
- L = Low probability that stress or aging mechanism will cause component degradation.
- na = Stress or aging mechanism does not affect component.

Table 4.4 Combustion Engineering CED System Stress Summary

Component	Operating Stresses												Environmental Stresses			Potential Aging Mechanisms								
	Mech. Wear	Cyclic Fatigue	Debris/Crud	Reactor Trip/Scram	Boric Acid Corr.	Electrical Surge	Maintenance	Testing	Human Error	Elec. Noise & Drift	Elec. Arcing	Vibration	Radiation	Temperature	Humidity	Wear	Corrosion	Stress Corr. Cracking	Fatigue	Thermal	Irradiation	Insul. Degrad.	Erosion	Fatigue Crack Growth
CRA Control Elem. Rods	M	M	H	L	L	na	L	L	L	na	na	M	M	L	L	M	L	H	M	L	M	na	L	M
Spider	M	H	H	L	L	na	L	L	L	na	na	M	M	M	L	M	L	M	M	M	M	na	L	M
CRDM Motor Housing	L	M	L	M	H	na	L	L	M	na	na	L	M	M	M	L	M	M	M	M	M	na	L	M
Coils	L	M	na	L	H	H	M	M	M	na	H	L	M	H	H	L	H	na	L	M	M	H	na	na
Vent Valve	H	M	H	L	H	na	M	M	M	na	H	L	M	M	L	M	H	M	L	M	M	na	L	L
Extension Shaft	M	M	H	L	L	na	L	L	L	na	na	L	H	M	L	H	L	L	L	M	M	na	M	M
Mechanical Latches	M	M	H	L	L	na	L	L	L	na	na	L	M	M	L	H	L	L	L	M	M	na	L	L
Omega Seals	L	L	L	M	H	na	H	H	H	na	na	L	H	H	L	L	H	na	na	H	M	na	L	na
RPI Reed Switch	M	M	na	L	M	H	L	L	L	M	L	M	M	M	M	M	M	na	M	M	M	M	na	L
Cable & Converters	L	H	na	L	H	H	M	M	M	L	M	M	H	H	M	L	H	na	M	H	H	H	na	L
Electronics	na	M	na	L	M	H	L	M	M	M	M	M	M	M	M	na	M	na	L	H	M	M	na	L
Control System Diodes & SCR's	L	M	na	L	na	H	L	M	M	M	L	M	L	M	M	L	na	na	M	H	na	na	na	L
Power Supp.	na	M	na	L	na	H	M	M	M	H	M	M	L	M	M	na	na	na	L	H	na	na	na	L
Power Switch Assy	M	M	na	L	na	H	L	M	M	M	L	M	L	M	M	na	na	na	M	H	na	na	na	L

Legend:
- H = High Probability that stress or aging mechanism will cause component degradation.
- M = Medium Probability that stress or aging mechanism will cause component degradation.
- L = Low Probability that stress or aging mechanism will cause component degradation.
- na = Stress or aging mechanism does not affect component.

5. USNRC AND INDUSTRIAL STUDIES

Both the B&W and CE control rod drive systems have been the focus of on-going NRC and industrial research. Much of this work has been in response to specific operational occurrences, such as failures of the control rod and guide tube, and cobalt reductions required by ALARA commitments. Recently, emphasis has shifted to component aging and plant life extension concerns. This section summarizes the programs which have provided pertinent information in attaining the goals of the NPAR program. In addition, these programs document the system and component failures and degradation caused by continued exposure to the operating and environmental stresses discussed in Section 4.0.

For the ten year period beginning in 1980, the B&W and CE control rod drive systems have been addressed by the NRC through regulatory notices and research programs. Four Information Notices published during this period alerted utilities to operational occurrences resulting in events ranging from immovable control rods to Technical Specification violations. The annual fuel performance reports highlight any significant operational occurrences with the control rods and CRD mechanisms. All of these documents pertinent to CRDM aging are summarized below.

Draft NUREG-1299 contains the Standard Review Plans (SRPs) addressing plant license renewal. These SRPs specifically address the aging of the CRDMs and related sub-components, and establish the requirements for demonstrating their acceptability for license renewal. This NUREG is also summarized in this section.

5.1 USNRC Information Notices

5.1.1 Information Notice No. 85-38: Loose Parts Obstruct Control Rod Drive Mechanism

This Information Notice alerted all B&W licensees of several incidents which occurred at Davis Besse, where loose parts lodged in the CRDMs, preventing rod movement. Subsequent investigations revealed that the loose parts were a broken set screw from a handling tool and four broken locking springs.

An inadequate assembly procedure was the cause of the broken locking springs. Prior to these occurrences, a technician was required to verify the correct positioning of these springs by "feel" using a long-handled tool. If the spring was not positioned properly, it would hit the inside of the torque tube cap and snap when the leadscrew was fully withdrawn. The brittle, intergranular nature of the fracture surface, as well as the gouges on the cap, confirmed this failure mechanism.

Corrective action at Davis Besse consisted of examining all the CRDMs for additional broken springs, and visually verifying that the locking springs were properly placed.

5.1.2 Information Notice No. 85-86: Lightning Strikes at Nuclear Power Generating Stations

This Information Notice alerted PWR owners of the potential for reactor trips and instrument damage resulting from lightning strikes. Solid state circuitry was particularly susceptible to lightning induced line surges.

ANO-2 (CE) experienced a trip from 100% power on a low DNBR signal resulting from a lightning strike transient induced in two of the core protection channels. Subsequent investigations revealed no additional equipment or instrumentation damage.

A similar occurrence at Zion (Westinghouse) resulted in RCCA power system fuse failures, disabling several DC power supplies, resulting in control rod drops.

5.1.3 Information Notice No. 86-108: Degradation of Reactor Coolant System Pressure Boundary Resulting from Boric Acid Corrosion

This Information Notice, including two supplements, documented the deleterious effects of boric acid corrosion from primary coolant leakage. Though the leakages occurred at a high-pressure injection nozzle and a instrument tube seal, similar results would occur from CRDM pressure housing leaks.

Boric acid will rapidly corrode ferritic (carbon) steel components, and is most pronounced on metal surfaces which are cool enough to remain wetted. Corrosion rates in excess of one inch per year have been experienced in plants and laboratory tests where low quality steam from borated reactor coolant impinged upon a surface, keeping it wet. If the metal is hot, then the surface remains dry, and this loss of electrolyte will slow the corrosion rate. If the leakage occurs in hot surroundings, such as the reactor pressure vessel head, then the boric acid solution boils, increasing its acidity and corrosiveness. The evaporation of the water also causes boric acid crystals to accumulate, which could block the CRDM cooling passages, as occurred at Turkey Point (Westinghouse).

Research conducted by Westinghouse indicated the corrosion rates may have been underestimated. In one series of tests, an Inconel CRDM head weld with typical crevice geometry was exposed to dripping 15% boric acid at 210°F. Extensive general corrosion of the steel occurred (400 mils/month), with no preferential attack to the crevice or the Inconel.

Such leakage could also degrade non-metallic components, such as the insulation on cable, stator coils, and other electrical components.

5.1.4 Information Notice No. 88-47: Slower-Than-Expected Rod-Drop Times

This Information Notice documented a violation of Technical Specification control rod drop times, resulting from a test methodology change at ANO-2. The new test interrupted the power to all the rod drive mechanisms simultaneously, using the reactor trip breakers. Previously, power was interrupted individually to each CEDM. Simultaneous interruption of power is a more realistic representation of the desired safety function, but leads to a slower dissipation of the stored energy in the holding coils. This resulted in a maximum of 3.2 seconds drop time for all the rods, which exceeded the maximum 3.0 seconds Technical Specification requirement.

A review of all of the FSAR accident analysis, incorporating the increased drop times was required to ensure conformance with all of the original licensing basis.

5.2 USNRC Research Programs

5.2.1 Control Rod Guide Tube Wear in Operating Reactors, NUREG-0641, April 1980[17]

This NUREG, published early in 1980, documented the discovery of guide tube cracks at Millstone 2 after the first cycle of operation. The wear was attributed to flow induced vibration of the Inconel clad control rods rubbing against the Zircaloy guide tubes. On-site inspection revealed that the maximum wear corresponded to the location of the control rod tips when the rod was in the full out position.

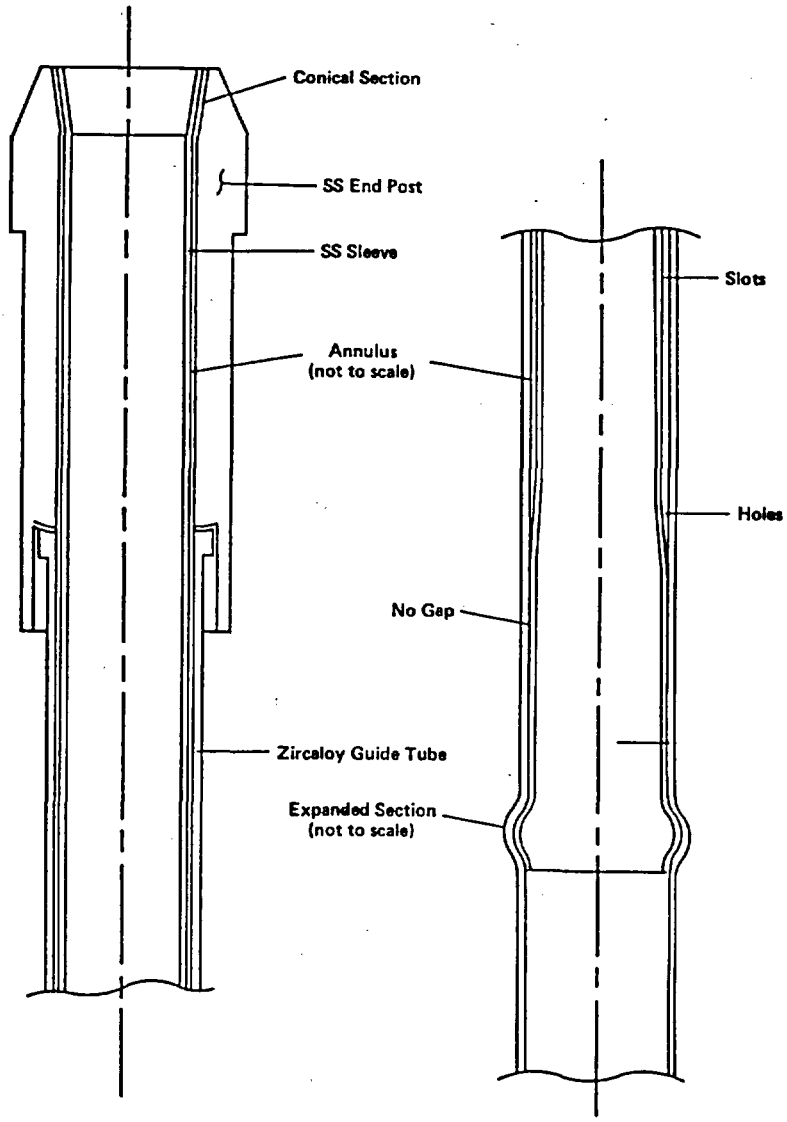

Figure 5.1 Combustion Engineering Guide Tube Sleeve

To prevent this type of wear, chrome-plated stainless steel sleeves (Figure 5.1) were installed in the upper portion of the guide tubes and fuel assembly modifications were proposed which would modify the coolant flow characteristics. The insert was held in place by of a mechanical crimp, which produced a bulge in both the sleeve and guide tube. This crimp prevented axial motion of the sleeve in the cold condition. Differential thermal expansion between the stainless steel sleeve and the Zircaloy guide tube provided additional resistance against axial motion at operating temperatures.

Eddy current inspections after one cycle of operation with the sleeves revealed no detectable wear. CEA examination confirmed that the rod tips experienced no appreciable wear from contact with the harder surface of the stainless steel sleeve inserts. To assure the continued adequacy of the crimps, Combustion Engineering developed a pull test which was performed for each crimp.

This NUREG also evaluated the Babcock & Wilcox guide tube design for similar problems. From their evaluation, the NRC concluded that B&W plants were not susceptible, based primarily upon three main considerations:

1) the lack of indicated through wall cracks based upon the results of air tests,

2) design differences between CE and B&W, particularly the greater flexibility of the B&W rods, and the use of stainless steel cladding rather than Inconel, and

3) design similarities between B&W and Westinghouse, which also did not experience guide tube wear.

5.2.2 Fuel Performance Annual Reports for 1980-1988, NUREG/CR-2410, 3602, 3950 Vols. 1-6[18,19,20]

These annual NRC reports on LWR fuel performance, began in 1978. They include information on continuing research and development projects, trending data, and significant performance and operational problems. Information on control rods and control rod drives are also included in these reports.

Broken fuel assembly springs were first identified at three B&W reactors in 1980. NRC, utility and vendor analysis concluded that most failures were due to fatigue initiated cracking, followed by stress corrosion crack propagation, which eventually caused the spring to fail. These failures were not considered a significant safety hazard, however, the potential for loss of positive hold-down force, loose parts, and interference with CRA movement were identified. Since the single failure discovered at Crystal River did not also appear to be stress corrosion cracking related, further site inspections were required of the licensees. These inspections identified 64 other spring failures (Table 5.1); no failures were reported in 1984, 1985 and 1986.

Table 5.1 Events Involving Hold-Down Springs

Year	Plant	Number of Broken Spring(s)
1988	Arkansas-1 Oconee-2 Oconee-3	4 4 5
1987	Crystal River-3 Oconee-3	9 3
1983	Oconee-1	4
1982	Davis Besse-1 Oconee-1 Oconee-2 Oconee-3	1 1 4 2
1981	Arkansas-1	1
1980	Crystal River-3 Davis Besse-1 Oconee-1	1 20 5

The 1986 report first identified the potential for irradiation assisted stress corrosion cracking (IASCC) for core structural materials, including the control rods and their drive mechanisms. Reactor components with a cumulative fluence above the IASCC fluence threshold of 5×10^{20} nvt may be susceptible to IASCC. Because many CRDMs remain in service for up to 40 years, their total fluence may exceed this limit, particularly the leadscrew and coupling mechanisms.

These annual reports highlighted the deleterious effect of boric acid corrosion, and its potential effect upon reactor operation. The 1987 report documented the failure of a reactor vessel head o-ring, causing boric acid build-up on the CEDMs, which eventually led to overheating of the upper control element gripper coils.

Numerous CRD operational, maintenance, and procedural deficiencies were described in these reports. Table 5.2 presents some of the major CRDM failure events and their particular cause. There were no events reported in 1982-1984, 1987 and 1989. The guide tube wear problem identified by Combustion Engineering, the R&D programs instituted, and the design of the guide tube sleeve were also discussed in the annual reports.

Table 5.2 Cause of Events Involving Control Rod Drive Mechanisms

		Cause of Event					
		Screws		Springs			
Year	Plant	Loose	Broken	Improperly Stated	Broken	Overheating of Rod Gripper Coils	Cracking of CRD Components
1988	Millstone-2					X(a)	
	Palisades						X(b)
1986	Crystal River-3(c)						
	Palisades						X(d)
1985	Davis Besse-1		X	X	X		
1981	Davis Besse-1				X		

(a) Event caused by boric acid buildup on CRD mechanism coils.
(b) Eleven more cracked housings found.
(c) Cause of event not determined.
(d) Contaminant resulted in transgranular stress corrosion cracking of three control rod drive seal housings.

5.2.3 Residual Life Assessment of Major Light Water Reactor Components -- Overview, NUREG/CR-4731, November, 1989[21]

This NUREG assessed the aging of selected, major light-water-reactor components and structures, including reactor internals and PWR control rod drive mechanisms. The stressors, potential degradation sites and mechanisms, failure modes, and inspection requirements were qualitatively discussed.

The important CRD stressors included operational thermal transients, CRD stepping, temperature, radiation, and corrosion. The primary degradation sites subject to fatigue damage include the pressure housing, seal welds, and the control rod drive coupling mechanism. Typically, the fatigue

usage factor for these components was low, 0.1 as compared to an allowable factor of 1.0. Mechanical wear is a concern for the CRD internals, such as the latches, drive rods, and roller nuts. The actual wear on these components may take the form of bearing spalling, or rubbing on roller nuts, latches, and other mating parts.

The past occurrences of boric acid leakage, and its deleterious effects were discussed. Laboratory tests indicated that the corrosion rates for both low alloy and carbon steels may be greater than previously estimated when exposed to the primary coolant, therefore, the need for adequate leakage monitoring procedures was highlighted.

Three potential failure modes for CRDMs which would affect safety were presented, including rupture of the CRDM pressure housing, pressure boundary leakage, and failure to insert the control rods upon demand. The probability of pressure boundary leakage is higher than rupture, which would have the same effect as a small break LOCA. Seal degradation was a common cause of leakage. Mechanical binding or interference, particularly when caused by loose reactor internals, was also discussed.

Various in-service inspection requirements were presented, particularly those required by the ASME Boiler and Pressure Vessel Code, Section XI. Some common non-destructive inspection methods used by nuclear plants to meet these requirements were also presented.

Based upon information presented, the critical CRDM sub-components with respect to plant aging, are listed in Table 5.3. Stressors, degradation and failure mechanisms are also provided for each.

The following general recommendations were made on the detection and mitigation of CRD aging:

a) increased inspection requirements for all the CRDM pressure housings and welds,

b) improved primary leakage detection methods, and

c) periodic inspections of CRD mechanisms to assure the validity and accuracy of the vendor life estimates.

Table 5.3 Summary of PWR CRDM Degradation Process

Degradation Site	Stressor	Degradation Mechanisms	Potential Failure Modes	Inservice Inspection Surveillance Methods
Pressure Housing	Thermal stress, high temperature water	Thermal embrittlement Low-cycle fatigue	Cracking, leading to leakage	Volumetric or Surface
Latch Assembly	Loose parts impacting, metal to metal contact	Fretting, wear, spalling	Binding, stuck rods	None
Coil Stack	Moisture, temperature, radiation	Insulation breakdown, electrical shorting	Dropped rods	None
Drive Rod	Rubbing, impacting	Wear, low-cycle fatigue	Uncoupling of control assembly	None
External Components	Boric acid (if leak is present)	Boric acid corrosion	Leaks	None

5.2.4 Proceedings of the USNRC Fifteenth Water Reactor Safety Information Meeting, NUREG/CP-0091 Vol. 3, October 1987[22]

This NUREG contains the conference proceedings of the 15th Water Reactor Safety Meeting held on October 26-29, 1987 at Gaithersburg, MD. One paper presented at this conference, "Technical Safety Issues Related to Residual Life Assessment of Major LWR Components and Structures," by V. Shah and P. MacDonald of INEL assessed aging degradation of selected LWR components, including PWR CRDMs.

The four main conclusions are similar to those reported above for NUREG/CR-4731:

1) Only 10% of the peripheral CRDM pressure housing welds are required to be inspected. Because interior CRDM welds have cracked and leaked, the inspection requirements should be revised to include all of the CRDM pressure housings.

2) The actual degree of thermal embrittlement for pressure housings fabricated from cast stainless steel needs to be monitored.

3) Representative CRDMs should be removed from service periodically and inspected for wear. When returned to service, they should be rotated and placed in a different core location.

4) Cumulative travel of the leadscrew should be monitored and compared to life test results, and the need for replacement determined.

5.2.5 USNRC Standard Review Plan, NUREG-0800, Rev. 1, July 1981[23]

This document consists of individual Standard Review Plans (SRPs) which provide guidance to the NRC staff for the review of utilities operating license submittal and amendments. Generally, these SRPs define the minimum structural, material, and operating requirements for the systems during normal and upset conditions. System and component degradation due to aging is not specifically addressed, nor are any inspections required to assess the effect of aging upon system and component operability.

Four sections of NUREG-0800 are specifically applicable to the design and operability of the CRDMs:

1) Section 3.9.4 Control Rod Drive Systems -- This section defines the minimum design requirements for the actual mechanism portion of the CRDMs. Specific references are provided to industrial codes and standards to which the design must adhere. Loading combinations are defined to insure operability under all normal and upset conditions. Life cycle tests for all new designs are also required to insure operability for the design life.

2) Section 3.9.5 Reactor Pressure Vessel Internals -- This section provides the same requirements as Section 3.9.4 for the reactor internals, including the individual control rods and guide tubes. Minimum design requirements are provided to insure that these components will not fail or degrade in a manner which would not allow the CRDMs to function as designed to control reactivity excursions or to provide for a rapid shutdown.

3) Section 4.5.1 Control Rod Drive Structural Materials -- This section defines the material requirements for the CRDM, including material cleaning and cleanliness controls. Materials and material conditions which are susceptible to SCC type failures are not acceptable for the CRDMs. Materials used in the design of the CRDM are required to conform to Reg. Guide 1.85 "Code Case Applicability for ASME Section III Material." Adherence to this guide provides additional assurances that the CRDM materials will not be susceptible to SCC failures for the life of the CRDM.

4) Section 4.6 Functional Design of Control Rod Drive System -- This chapter defines the requirements necessary to insure the operability of the CRDM and supporting systems for all normal and upset conditions. Specific emphasis is placed on the adequacy of the CRD cooling system. Electrical systems and instrumentation are also verified operable under all modes of operation, so their failure will not prevent the CRDM from operating. The total CRD system must be designed so that no single failure will render the system inoperable.

5.2.6 Standard Review Plan for the Review of License Renewal Applications for Nuclear Power Plants--Draft Report, NUREG-1299[24]

This draft SRP provides guidance to utility and NRC personnel in preparing and reviewing of safety evaluations applicable to nuclear plant life extension. The main emphasis is to insure that aging will not adversely affect the component performance for the term of the license renewal. This is accomplished by the following measures:

1) identifying the systems, structures, and components whose functions and performance must be assured,

2) insuring that significant age-related degradation has been identified and evaluated, typically by performing an Integrated Plant Assessment (IPA),

3) verifying that an adequate management program for age-related degradation has been implemented to ensure that none of the current licensing bases have been compromised. This program should specifically address surveillance, maintenance, trending, replacement, refurbishment, and operating life assessment, and

4) identifying and providing specific details on how aging will be assessed in any structure, system, or component not specifically addressed by such a program, or why significant age-related degradation is not anticipated.

The PWR Control Rod Drive System is specifically addressed by this Draft NUREG. Degradation process information, similar to Table 5.3 (Section 5.2.3) is also provided. The importance of considering age-related effects for system sub-components is also discussed. Guidance is provided for the following CRDM subcomponents:

a) piping,
b) cables and wiring,
c) relays, circuit breakers, and switchgear,
d) electrical motors,
e) sensors,

f) electronic components, and
g) electronic devices.

5.3 Industrial Research

Component and system research, primarily sponsored by EPRI, dealt mainly with the performance of the control rods and the CRD mechanisms. More recently, the PWR plant life extension project at Surry addressed the aging of various systems and components, including the control rods and drive mechanisms. These reports are summarized below.

5.3.1 Wear Measurements of Nuclear Power Plant Components, EPRI NP-3444, May 1984[25]

This report presented the results of an EPRI sponsored program, performed jointly by Battelle and Combustion Engineering, to obtain wear data for some major reactor components in support of the EPRI cobalt reduction program. Two CEDMs, one from Millstone-2 and a System 80 design, were included in this study. The Millstone-2 CEDM was representative of similar mechanisms installed at Maine Yankee, San Onofre 2 and 3, Arkansas 2, and St. Lucie 2. The primary differences between the two design types were that the Millstone CEDM had an extra gripper assembly which served as an anti-ejection device, and an improved latch-pin-capture method which minimized rotational wear by using square headed pins.

Both CEDMs were subjected to accelerated life tests in an autoclave simulating the typical PWR operating environment. The Millstone 2 type CEDM was tested before this program for an equivalent of 83 years of design operation, or 6.31×10^4 linear meters of drive-shaft travel. The System 80 CEDM was tested for an equivalent of 40 years of design operation, or 1.02×10^4 linear meters of drive shaft travel.

The accelerated life tests on both types of CEDMs resulted in similar wear patterns, although the Millstone 2 CEDM exhibited more wear. The majority of material loss occurred at the leading edge of the latch teeth. Profilometry measurements on the three upper and lower System 80 grippers resulted in a total weight loss of 1.5 g, which agreed very closely with the 1.7 g obtained from component weighing. The Millstone 2 CEDM resulted in a weight loss of 4.0 g for one of the grippers. Since three grippers are normally used, a total weight loss of 12.0 g can be expected, which is 38% less than the 19.6 g loss obtained from weight measurements. (Table 5.4).

Table 5.4 Results of CEDM Wear Tests

CEDM	Drive Shaft Travel (m)	Equiv. Test Usage (yrs)	Measured Weight Change (g)	Measured Weight Change from Profilometer (g)
Millstone 2	6.3×10^4	83	19.6	12
System 80	1.0×10^4	40	1.7	1.5

The cobalt wear rate for the Millstone 2 CEDM was calculated to be 1.7×10^{-4} gm/m of drive shaft travel, which is 75% greater than the System 80 rate of 9.7×10^{-5} gm/m (Table 5.5). This wear rate, when multiplied by actual plant operating data, was significantly less (2.5 gm/year) than the 51 gm/year previously calculated.

Table 5.5 Cobalt Release from CEDMs by Plant

Plant	Number of CEDMs	Driveshaft Travel/CEDM meters/CEDM/yr	Total Travel, meters/yr	Cobalt Release Rate, g/meter	Total Cobalt Released, g/Plant-yr
Maine Yankee	65	1.5×10^2(1)	9.8×10^3	1.7×10^{-4}	2
Arkansas Nuclear One #2	81	2.5×10^2(2)	2.1×10^4	1.4×10^{-4}(3)	3
System 80 (Design Basis)	89	2.6×10^2	2.3×10^4	9.7×10^{-5}	2

(1) Average Value
(2) Average Value
(3) The anti-ejection gripper was not used for this plant

The report concluded that the wear tests performed on the two representative types of CEDMs showed in no deleterious results which would affect the stated 40-year lifetime.

5.3.2 Lifetime of PWR Silver-Indium-Cadmium Control Rods, EPRI-4512, March 1986[26]

This report documents work by Westinghouse to determine the lifetime of their Ag-In-Cd control rods. Many of the results are applicable only to Westinghouse control rods because of the design differences of the CRA and the upper internal structures. However, one applicable conclusion established that there is a clad-cracking threshold of 2-2.5 x 10^{22} nvt total fluence threshold for stainless steel clad rods. Because the control rods are replaced after approximately ten years, aging is not a concern. However, it is important to track the total rod exposure history, and to visually examine the rods to ensure there is no fretting or cracking. A severely cracked rod could fail and prevent the CRDM from either inserting or withdrawing the CRA.

5.3.3 Characterization of the Performance of Major LWR Components, EPRI NP-5001, Jan. 1987[27]

This report presented the results of an EPRI study performed by the S.M. Stoller Corp. to characterize historical LWR experience on major component failures and modifications. The information presented included:

a) failure rate,
b) repair time,
c) fraction of the repair time which resulted in forced outage hours,
d) the shadowing factor,
e) the performance losses caused by reduced load operation,
f) failure frequency as a function of unit age and failure type, and
g) overall average performance loss due to the failure.

Babcock & Wilcox control rod drives and holdown springs, and Combustion Engineering control element drive mechanisms were included in this study.

Compared to other PWR designs, the B&W units have experienced the most widespread trouble with the CRDMs, primarily due to electrical shorts originating in the stator winding endturns. B&W determined that the major contributors to these failures were the following:

1) epoxy breakdown due to its incompatibility with the wire,
2) moisture,
3) bifilar design (side-by-side phasing), and
4) fabrication defects.

Typically, these shorts caused the CRDM power-supply fuses to open, resulting in dropped, inoperable control rods, and subsequently, a reactor trip. The CRDM was then either repaired, replaced, or operations resumed at a reduced power. The failure statistics are summarized in Table 5.6.

Table 5.6 Control Rod Drive Failure Statistics

	Frequency	EFPH per Outage	Repair Time	CF Loss (%)	% Forced
B&W CRDM Stator Failures	.60	116	116	.79	95
CE Major CRDM Failures (w/o Palisades)	.15	161	161	.28	95
Palisades Major CRDM Failures	1.69	154	154	2.97	98
B&W Fuel Assembly Hold-Down Spring	.005	2210	---	.04	100

The Combustion Engineering magnetic jack CEDM, compared to the rack-and-pinion type, has performed well. The only generic problem reported was the failure of the 15 v dc power supply for the logic system which controlled rod stepping. This failure generally caused dropped rods, resulting in some lost effective-full-power-hours. In response to this recurring problem, CE installed redundant power supplies in some units. There were ten more serious failures due to stuck rods, gripper coil failures, CEDM ventilation, and CEDM shaft failures resulting in more than 100 lost effective full power hours. Smaller losses due to clutch coil failures, and the installation of rod block circuitry were also included.

The failures with the rack-and-pinion type CEDM at Palisades were more significant, resulting in 98% of all lost effective full power hours for CEDM-related problems. The rack-and-pinion CEDM requires a pressure boundary seal against a rotating drive shaft, and most of the problems resulted from failures of this seal. However, problems with the clutch, brake assembly, and other components also contributed to the outage time at Palisades. Failure statistics for CE-type CEDMs are summarized in Table 5.6.

Failures of the B&W fuel assembly holdown spring were also discussed in this report. These failures presented a potential loose parts problem which could interfere with control rod insertion, as discussed in Section 5.2.2. The Inconel X-750 spring material, along with its coarse grain size, were major failure contributors. The crack initiation was due to high-cycle, low-amplitude fatigue stresses resulting from flow-induced vibrations. Either the same mechanism, or stress corrosion, caused the

cracks to propagate. The coarse grain structure of the spring accounted for the increased sensitization to fatigue and IGSCC cracking.

5.3.4 PWR Pilot Plant Life Extension at Surry Unit 1: Phase 2, EPRI NP-6232, March, 1989[28]

This report describes the scope of work and principal results from Surry 1 plant life extension study. Although Surry 1 is a Westinghouse-designed PWR, the aging issues addressed for the CRDMs are applicable to the B&W and CE systems.

Early work in this project highlighted the need to obtain actual data on temperature and radiation, so that the operating life of the CRDMs and cables in containment could be accurately assessed. This data is not normally monitored, so a degree of uncertainty is factored into the component life assessment calculations. This work identified three main issues in CRDM aging:

1) Type 304 stainless steel castings, with a ferrite content of 20%, are vulnerable to thermal embrittlement; to accurately assess this CRDM surface temperatures must be known.

2) The CRDMs are subject to thermal and low cycle fatigue failure. Fatigue calculations must use conservative values when postulating the effect of certain transient events. Actual CRD operating temperatures during these operational transients would verify the accuracy of the calculations, giving a more accurate assessment of component life.

3) CRDM coils are susceptible to high temperature degradation. Typically, coil temperatures are calculated from resistance and current data. Actual coil temperature data is essential to accurately determine the life of the coils. This knowledge would enable a plant to have a program to replace coils which have experienced high temperature prior to failure and possible rod drop.

Predicting the effect of temperature and radiation on cabling located in containment is important to the operation of the CRDM. Organic polymer cable materials are subject to aging due to thermal, oxidation, radiation, electrical stress, and moisture intrusion leading to insulation degradation. EQ calculations on the cabling typically assumed conservative temperatures (125°F) and radiation exposure (37R). Actual exposure data would determine the validity of these assumptions, and allow replacement of cabling which have exceeded failure thresholds.

5.4 Summary

Age-related operating failures of the CE and B&W control rod drive systems has resulted in numerous NRC and industry studies. Tables 5.7 and 5.8 summarize the major components analyzed by these studies for CE and B&W, respectively. Instances of primary coolant leakage were common to both designs due to pressure housing cracks (CE) and seal degradation (B&W). The majority of the studies recommended increased leakage monitoring and inservice inspections as a means to identify age degradation.

The current Standard Review Plant (SRP) and the draft SRP for license renewal was also reviewed. The latter specifically addresses aging for the control rod drives and related sub-systems. Each plant will be required to develop an aging management program which identifies and evaluates component and system aging.

Table 5.7 Summary of Combustion Engineering Control Element Drive Aging Analyzed by NRC and Industry

Sub-System	Component Failure	Recommended Resolution(s)
I. a. Control Element Assy	Control Element Rod Clad Cracks	Rod Exposure Tracking; Increased Visual Inspection
b. Fuel Assembly Guide Tubes	Guide Tube Through Wall Cracks	Guide Tube Sleeving; Increase Rod and Guide Tube Inspections
c. Upper Guide Structure	---	---
II. Control Element Drive Mechanisms	Primary Coolant Leakage Caused by Seal Failures and Housing Cracks, Resulting in Corrosion and Gripper Coil Overheating	Improved Leakage Monitoring; Improved Fabrication Procedures; Increased Inservice Inspections
III. CEDM Control System	Lightning Induced Surges Causing Solid State Circuitry Failures	Additional Circuit Protection
	Failed 15 v Power Supplies	Install Redundant Power Supplies
	Slower than Expected Rod Drop Times	Review of all FSAR Analysis to Ensure Continued Compliance
IV. CEA Position Indication System	Cabling Failure Due to Environmental Degradation	Monitor Actual Exposure Data to Allow Replacement when Failure Thresholds are Reached
V. CEDM Cooling System	Boric Acid Obstructing Coil Cooling Passages	Improved Leakage Monitoring

Table 5.8 Summary of Babcock & Wilcox Control Rod Drive Aging Analyzed by NRC and Industry

Sub-System	Component Failure	Recommended Resolution(s)
I. a. Control Rod Assy.	Control Rod Clad Cracking	Rod Exposure Tracking; Increased Visual Inspection
b. Fuel Assembly Guide Tubes	Loose Parts Lodging in Guide Tubes	Core Component Design Modification
c. Upper Internal Guide	---	---
II. Control Rod Drive Mechanisms	Broken Lock Springs Binding CRDM	Improved Visual Inspection Techniques
	Primary Coolant Leakage Caused by Housing Cracks and Seal Aging	Improved Gasket Design; Improved Leakage Monitoring; Increased Inservice Inspection
	Roller Nut/Leadscrew Wear	Periodic Wear Measurements
III. CRDM Control System	Lightning Induced Surges Causing Solid State Circuitry Failures	Additional Circuit Protection
IV. Control Rod Assy Position Indication System	Cabling Failure Due to Environmental Degradation	Monitor Actual Exposure Data to Allow Replacement when Failure Thresholds are Reached
V. CRDM Stator Cooling System	System Not Evaluated	NA

6. OPERATIONAL EXPERIENCE (1980 - 1990)

6.1 Introduction

The primary objective of this study was to assess the impact of aging on the CRD system. To accomplish this, a comparison was made between the failures documented by the data bases, and the NPAR definition of aging failures. As defined in NUREG-1144, the following criteria must be satisfied for failures to be classified as aging related:

- The failure must be the result of cumulative changes with the passage of time, which if unchecked, could result in the loss of function and impairment of safety. Failures causing aging include:

  a) natural, internal, chemical, and physical processes which occur during operation,

  b) external stresses (radiation, heat, humidity) caused either by storage or operating environments.

In addition, to eliminate failures due to "infant mortality", the component must have been in service for at least six months.

A review of operating and failure history for the B&W and CE control rod drive systems suggest that both designs have experienced age degradation, resulting in significant plant effects. This data, for 1980-1990, was obtained from three national sources of nuclear plant operating experience information:

1) Nuclear Plant Reliability Data System (NPRDS),

2) Sequence Coding and Search System (SCSS), and

3) Nuclear Plant Experience (NPE).

The NPRDS is a computerized information retrieval system maintained by the Institute of Nuclear Power Operations (INPO). Performance information provided by this system is based upon failure event reports of key components submitted by nuclear utilities. NPRDS provides access to historical engineering failure data reflecting a broad range of operating experience.

The Sequence Coding and Search System (SCSS), also known as the LER data base, provides summaries for each LER. The entries provide information on the failed components mentioned in each LER, the root cause of the failure (if known), and the effect upon plant operation.

The Nuclear Plant Experience (NPE) data base is a commercial technical publication which compiles descriptive summaries of significant events and an indexed reference to all such occurrences. Much of the information in this data base is obtained from the LERs. However, information is also contained from utility operating reports and current technical literature.

Each of the three data bases were searched for control rod drive system (CE and B&W) failure events. Additional queries were made for the control rods, fuel assembly guide tubes, and upper plenum guide structures. A review of the failures revealed that all of the information identified by the NPE data base was also included in the SCSS and NPRDS data bases. Because of this duplication, the NPE was

not included in the review of control rod drive operating experience. To a lesser degree, there was duplication in the NPRDS and SCSS data. Both contained component failures and degradations which occurred during reactor operations, and resulted in trips, power reductions or ESF actuation. However, items discovered during outages that did not result in operational effects, typically were identified only in the NPRDS data base.

Based upon the results of these searches, the failures of the control rod drive system were divided into the following seven component and sub-system categories:

1) Cables and Connectors,

2) CRD Control System,

3) CRD Mechanisms,

4) Rod Position Indication,

5) Human Error,

6) Unknown Failure Causes, and

7) Miscellaneous.

These categories encompass four of the five major subsystems for the CE and B&W control rod drive systems as defined in Section 1.0. There were no failures of the cooling system. The other categories (cables and connectors, human error, unknown failure cause, and miscellaneous) were chosen following the review. Control rod and guide tube failures were categorized as miscellaneous, because there were only four LERs during the ten years. These few failures, however, were very significant since broken control rods, poison pellet loss, and immovable CEAs resulted.

Figure 6.1 shows the failure frequencies, as reported to the SCSS and NPRDS data bases, for the B&W and CE CRD system for each category. The actual number of failures reported in each data base is also presented. For CE, the control system accounted for the majority of the failures while for B&W, degradation of the control system and the control rod drive mechanisms were the leading causes of failure.

6.2 Failures Due to Aging

As shown in Figure 6.2, the percentage of failures attributable to aging degradation varies between the individual component and sub-system. The control rod drive mechanisms for both CE and B&W experienced the greatest percentage of aging failures, primarily due to seal degradation and housing cracks. This high rate of failure corresponds with the high likelihood of aging when exposed to the operating stressors, defined in Section 4.4, and the research performed on this problem by the NRC and industry, summarized in Section 5.0.

A large percentage of the failures have been classified as potentially aging, primarily due to the lack of a complete root cause failure analysis. Electrical connection degradation, failures of individual, modularized power and control components, and reed switch failures generally did not have failure causes reported. Small, modularized power supplies, for example, were regularly replaced with spare power

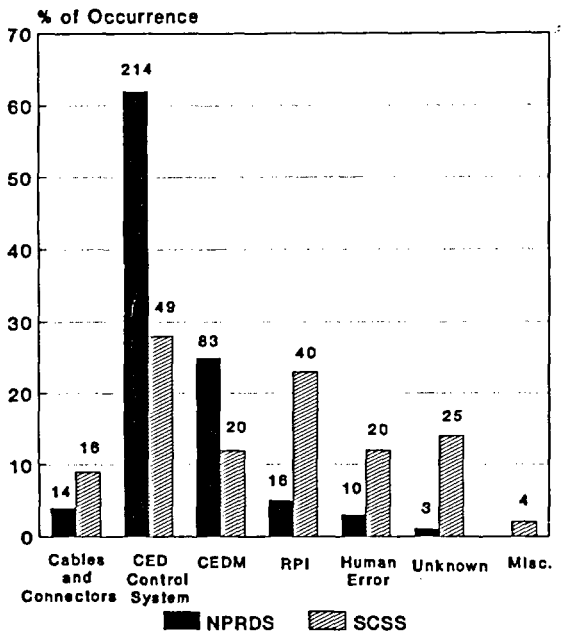

Combustion Engineering

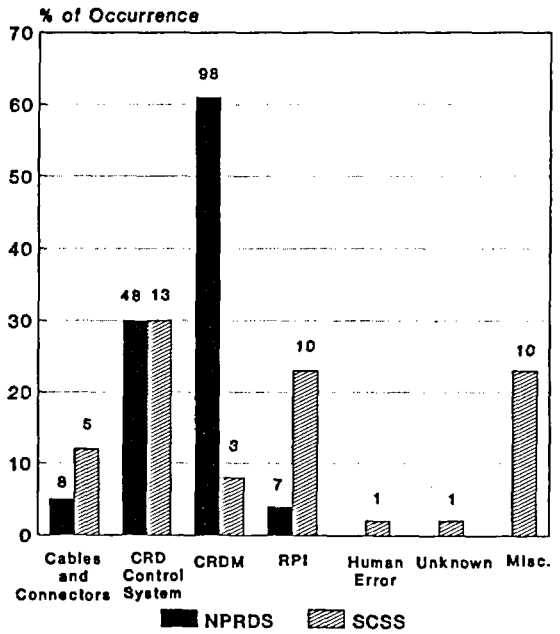

Babcock & Wilcox

Figure 6.1 CRD Sub-systems Database Comparison

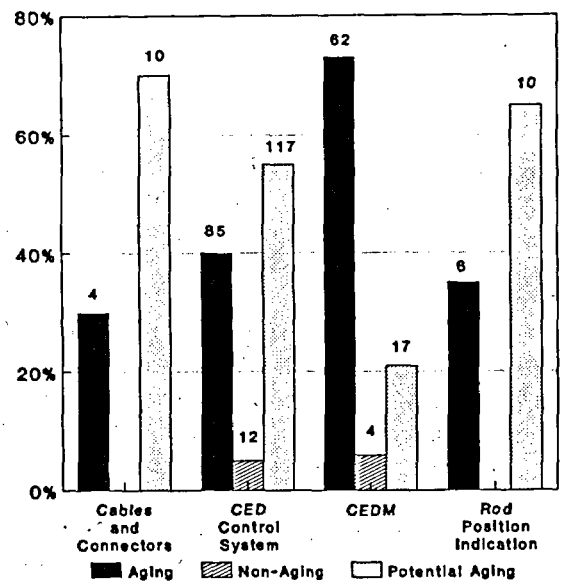

Combustion Engineering

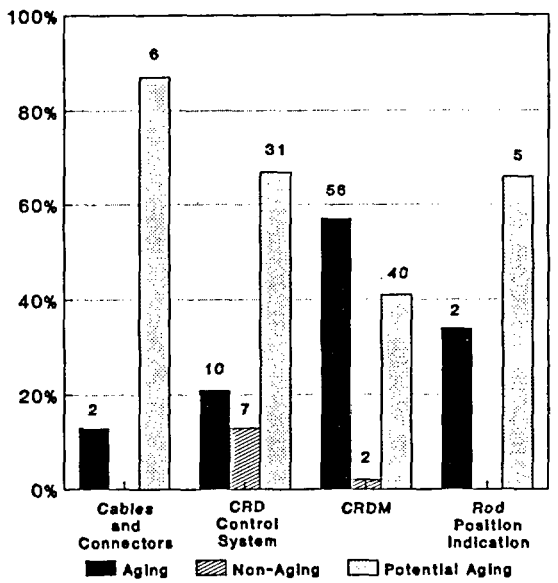

Babcock & Wilcox

Figure 6.2 Percentage of Component Failures Attributable to Aging

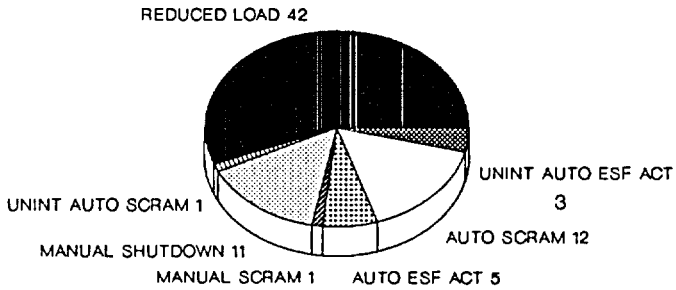

Combustion Engineering

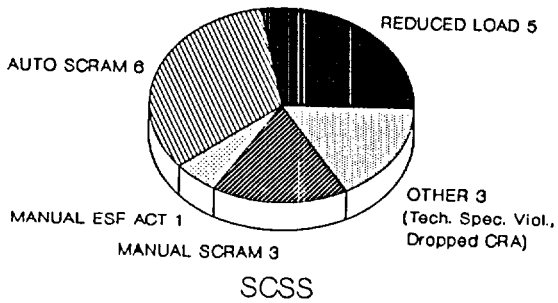

Babcock & Wilcox

Figure 6.3 Significant Plant Effects Resulting from CRD System Degradation

supplies, with no failure cause determined. The design of these small power supplies led to replacement rather than repair. Though engineering judgement dictates that many of these failures were due to aging, no assumptions were made in this study as to possible causes.

6.3 Significant Plant Effects

Component and control rod drive sub-system failures also resulted in significant plant effects, in addition to affecting the availability and operability of the system (Figure 6.3). These effects included reduced plant loads, reactor shutdowns, manual and automatic scrams, and actuation of Engineered Safety Features (ESF).

The operating system review for the CE and B&W control rod drive systems indicated that failures never resulted in prevention of gravity insertion of the rods upon demand via opening of the reactor trip switchgear. However, component degradation and failures resulted in increased component stresses, and unnecessary thermal and pressure cycles which challenged the operation of other safety systems. Consequently, these occurrences may represent a significant increase in plant risk.

For the ten years evaluated (1980-1990), CE plants reported 75 significant plant effects compared with 18 for B&W plants; these numbers correspond to an average of 5 significant effects per CE plant, and 2.5 per B&W plant. When compared to the cumulative number of operating reactor years over this period (119 reactor years for CE, and 70 reactor years for B&W), failures of the control rod drive system accounted for less than one significant effect per operating year.

Most significant plant effects resulted from slipped or dropped control rods. As per Standard Technical Specifications for both B&W and CE, operators were required to reduce plant power to 70% and ensure adequate remaining shutdown margin if the time to recover and re-align dropped rods exceeded one hour. Multiple dropped rods resulted in plant scrams and ESF actuation due to the rapid, unplanned reactivity transient. The actual root cause for the dropped rods varied from control system failures to component overheating caused by inadequate maintenance and human error.

Other failures of the CRD system for both designs, while not resulting in significant effects, did affect plant operations. A loss of one of the rod position indication systems resulted in a loss of redundancy, and required plant operators to verify rod position every four hours while the system was inoperable.

Specific system failures, and the effect's, will be discussed for the individual component and sub-systems identified in Section 6.1

6.4 Sub-System Failures, Causes and Effects

6.4.1 Cables and Connectors

Though not a specific sub-system, the CRD system utilizes electrical cables and connectors extensively. Inside the containment, electrical cables provide power to the stators, and transmit rod position information from the reed switches. The CRD control systems, remotely located outside of containment, consist primarily of modularized electrical components which also use cables and connectors extensively.

Both B&W and CE have experienced system degradation due to aging failures of the cables and connectors (Figure 6.2). Because cables and connectors are replaceable, the root cause for many failures has not been determined and has been classified as potential aging in this study.

Loose electrical connections were the prime failure cause for the Combustion Engineering CED system. Primarily affected were the plug in type of modularized electrical components. Broken CEDM connectors and poor or broken electrical contacts were also noted, as shown on Figure 6.4. RPI cable degradation, located between containment and the refueling disconnect panel, was a problem at Millstone 2. Brittle and cracked CEDM electrical cabling was found during an NRC Maintenance Team Inspection at Palisades; because of this aging failure, the cabling was replaced for all 45 CEDMs.[29]

Similarly, degraded electrical connections was the primary failure cause for the cables and connectors used in the Babcock & Wilcox CRD system. Davis Besse reported three occurrences of excessive electrical noise from faulty penetration modules. Electrical contact and cable degradation was also noted.

A contributor to cable and connector degradation may be the limited space available on top of the reactor vessel head. As described in Section 4.3, the power cables must be disconnected from all the individual drive mechanisms prior to reactor head removal. Due both to the physical size and amount of cabling, there is no convenient way to safely store these cables and frequently, they are draped over shielding blocks so as not to interfere with refueling operations. Discussions with several utilities indicated that regardless of the amount of care exercised, it was not uncommon for the cables and connectors to be damaged by other equipment and personnel. If the damage was not noted at the time

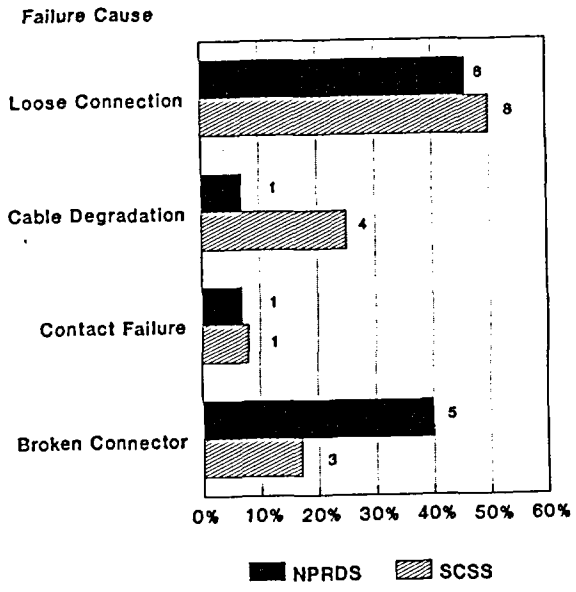

Combustion Engineering

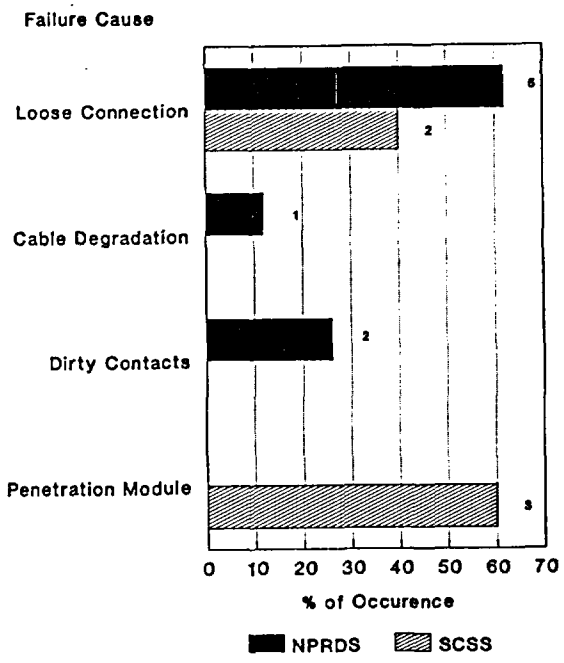

Babcock & Wilcox

Figure 6.4 Cables and Connectors Failure Cause

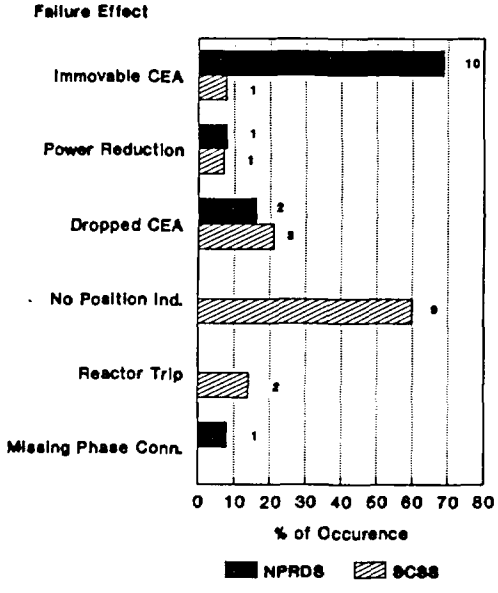

Combustion Engineering

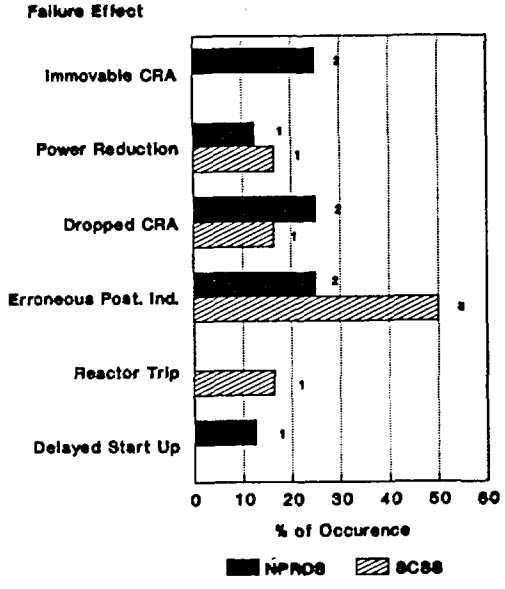

Babcock & Wilcox

Figure 6.5 Cables and Connectors Failure Effect

of occurrence, and if it was severe enough, it would be discovered during pre-operational system inspections, which may delay start-up for repair or replacement.

Similar CE and B&W failure effects were noted for the cable and connector degradation. (Figure 6.5). The primary effect was immovable and dropped rods due to loss of power or poor electrical contact. Power reduction, start up delay, or reactor trips also occurred, often as a result of the dropped or immovable rods.

6.4.2 Control Rod Drive Control System Failures

The CE and B&W control systems are primarily responsible for control rod movement in response to automatic or manual control signals. These systems are designed to provide power to the CRD mechanism coils, in the proper sequence, to actuate control rod movement in response to these signals.

The control systems consist primarily of modularized electrical components in centrally located control cabinets outside the primary containment. Degradation and failure of components in this sub-system accounted for the greatest number of CRD system failures. Aging was responsible for 40% of the system failures, while an additional 55% of the failures were potentially due to aging (Figure 6.2). Aging degradation was the cause of 21% of the B&W CRDM system failures, while an additional 67% of the reported incidents were potentially due to aging. The relatively high incidence of potentially aging related failures is primarily due to the modularized system design where electronic components are easily replaced.

Figure 6.6 shows the various components which contributed to the failure of the CE control system, with power supply failures accounting for the majority of the incidents. Numerous LERs were generated for the failure of the 15v power supplies which were a replacement design for the originally installed equipment. Because of the high failure rate of the replacement power supplies, the original design was re-installed by the utility, and the system design revised to incorporate redundant power supplies. No specific cause was given for the failure of the replacement power supply. A common symptom of power supply degradation was output drift, which was typically discovered during post outage maintenance testing. If the drift was beyond the allowable range, and could not be repaired, the power supply was generally replaced. Responses to the survey (Section 8.0) indicate that power supplies are included on the maintenance program and are checked, re-calibrated, and cleaned every outage.

Failures of the current sensor and automatic CEDM timer module (ACTM) also accounted for significant degradation of the control system. Current sensors detect the applied current to the gripper coils, and provide feedback signals to the control system. The ACTMs continually monitor and adjust the voltages applied to the stator coils, based upon the current and wave shape supplied to them. Failures of these components resulted in dropped or slipped CEAs due to incorrect gripper actuation and timing. As described in Section 2.5, the original CE power system design did not use the ACTM, so any such malfunction would not be detected before a CEA slipped. Numerous instances of sluggish gripper operation were reported before the root cause of the problem was traced to the gripper actuation. The CEDMCS system was improved to incorporate gripper monitoring to preclude these problems.

Failures of the power switch and optical isolator, (a sub component of the power switch assembly), also occurred. These failures interfered with, and prevented voltage from being supplied to the CEDM coils and were normally discovered while obtaining voltage traces prior to control rod exercising. Aging has been listed as the failure cause for the recent optical isolator failures.

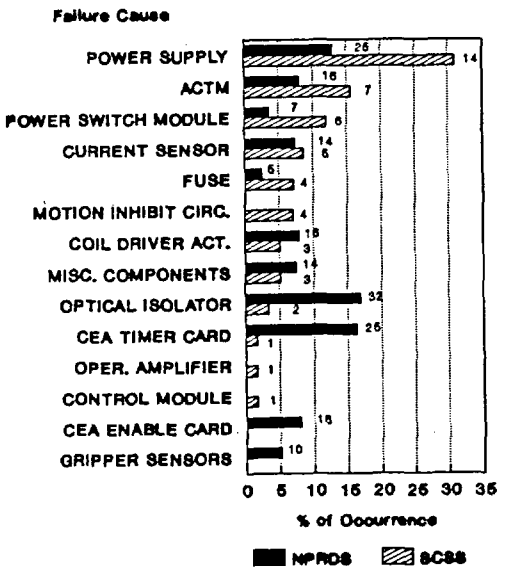

Combustion Engineering

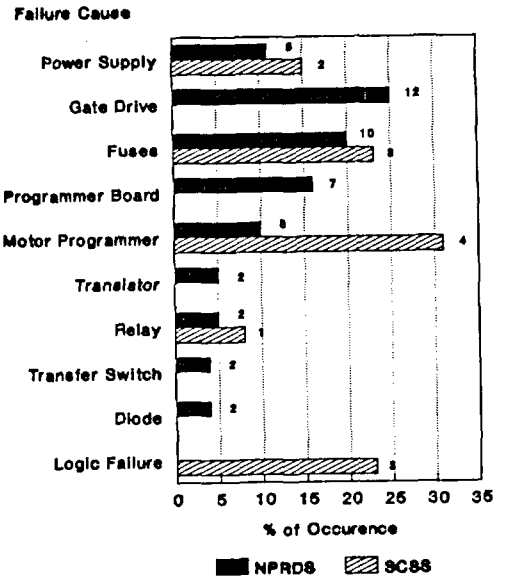

Babcock & Wilcox

Figure 6.6 CRD Control System Failure Causes

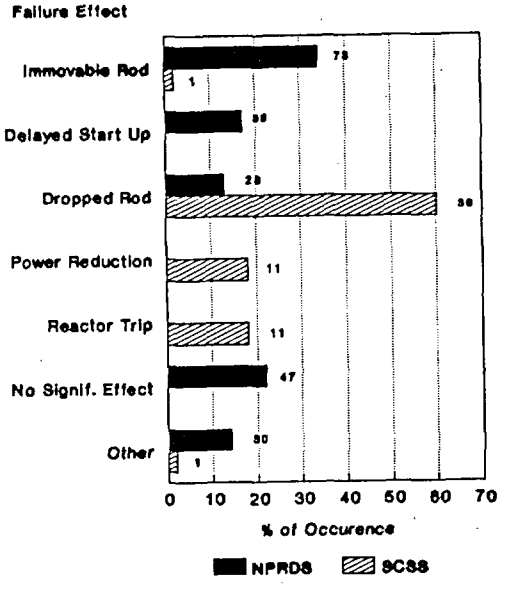

Combustion Engineering

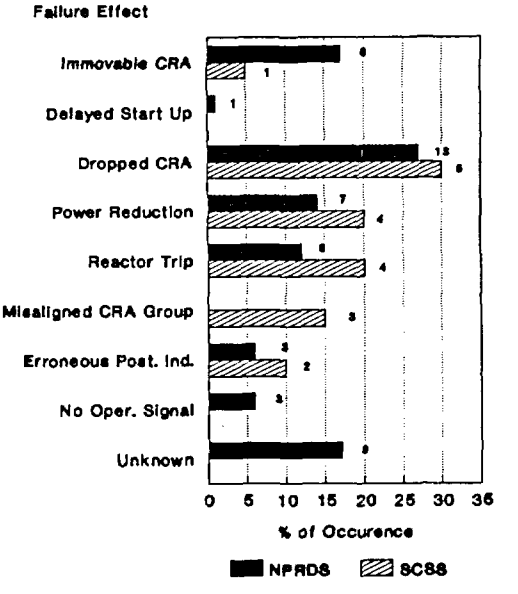

Babcock & Wilcox

Figure 6.7 CRD Control System Failure Effect

While control system breaker failures were not commonly reported, St Lucie 2 experienced a significant manual trip due to this failure. Although the root cause was not determined, subsequent testing indicated that the breaker dropped at a current of 30 amps, 25% less than the designed 40 amps. As a result of a follow up NRC maintenance team inspection, all of the sub system molded case circuit breakers (MCCBs) were added to the preventive maintenance program to ensure continued reliability for the 40 year design life.[30]

The B&W control system also experienced age-related failure and degradation, similar to CE, as shown on Figure 6.6. Failed diodes in the gate drive assembly, primarily due to aging, accounted for 25% of the NPRDS failures for the CRD system. The gate drives control the SCR sequencing which power the individual stator phases resulting in rod motion.

Motor control circuitry fuse failures were commonly reported in both data bases. Davis-Besse experienced three failures of transfer switch module fuse failures. These switches transfer a fully positioned rod group to the hold bus. Utility investigation into the failure cause was inconclusive; there was no evidence of either excessive heat or current being applied to the fuse, fuse holder, or associated wiring.

Power supply failures, due to age degradation, were also reported. These failures were commonly discovered during normal plant preventive maintenance and testing, and replaced. Similar to the CE experience, replacement power supplies were often installed without determining the exact failure cause. Motor programmer failures, and control system logic failures due to faulty logic cards were also observed.

Two occurrences of programmer-board failure due to overheating demonstrated the system's susceptibility to external stresses and inadequate maintenance as discussed in Section 4.1. The root cause of the overheating was concrete dust contamination from nearby construction. The dust entered the electrical cabinets, covering the internal component boards. The cabinets were cleaned, the failed components replaced, and the system returned to normal service.

Dropped or immovable control rod assemblies were the common effects of B&W and CE control system failures (Figure 6.7). Depending upon the number of assemblies involved, and the time required to recover and reposition them, these occurrences frequently led to subsequent power reductions, reactor scrams, and start-up delays.

6.4.3 Control Rod Drive Mechanism Failures

The CE and B&W control rod drive mechanisms are flange mounted on top of the reactor vessel head. In this location, they are subjected to a variety of stresses (mechanical, electrical and thermal) resulting in age related degradation and failures. (Figure 6.2). Compared with other sub-systems, the CRDMs have experienced the greatest percentage of age-related failures. Though the actual mechanisms differ in the operational design, both have experienced similar seal degradation, and stator failure due to overheating and moisture intrusion (Figure 6.8).

6.4.3.1 Primary Coolant Leakage

The frequent occurrences of seal failures due to aging is documented by fifty-two NPRDs entries from CE plants and forty seven from B&W plants. The majority of CE occurrences were confined to two plants which use the rack and pinion mechanism. This CEDM, as described in Section 2.3.2

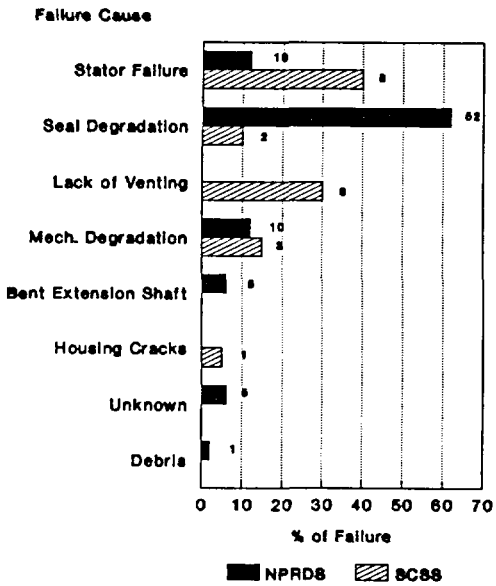

Combustion Engineering

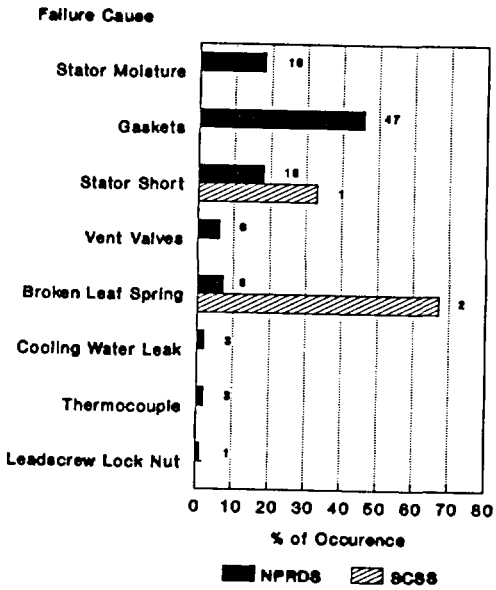

Babcock & Wilcox

Figure 6.8 Control Rod Drive Mechanisms Failure Cause

utilizes both rotating seals and o-rings. Degradation of the rotating seals has been the prime cause for the leaks. Since most CE plants use the magnetic jack design, primary coolant leakage has not been a common occurrence. As described in Section 2.3.1, this CEDM design uses a welded omega-seal at the reactor vessel flange, as opposed to a gasket seal. It is better in resisting leaks, but removal of the CEDM is more difficult and time consuming.

Failures of the spiral wound asbestos/stainless steel gaskets between the motor tube and the flange (Figure 6.9) were the main source of leakage for B&W plants. The root cause for the leaks were inadequate QC, normal wear and age deterioration. B&W redesigned the flexitallic gasket following a extensive R&D program which evaluated various materials and configurations. The new spiral wound graphite/stainless steel gasket is being installed by plants when leakage from the original seals is noted.

Seal degradation resulting in primary coolant leakage, particularly in a high temperature area such as the top of the reactor head, will cause the boric acid in the coolant to boil and concentrate, increasing its corrosiveness and acidity. Left uncorrected, the boric acid crystals may accumulate and block cooling passages, resulting in overheating and winding insulation degradation. Millstone 2 replaced twenty-three failed gripper coils because boric acid precipitation blocked the cooling passages resulting in overheating and dropped CEAs.

Boric acid corrosion, as described in Section 4.0, is a significant potential degradation mechanism, which if uncorrected, could result in control rod drive failure. Utilities were alerted to this problem by Information Notice 86-108 (Section 5.1). This Notice, and subsequent revisions, documented leakage from CRDM seals, which was detected during an outage, but judged acceptable for continued operation

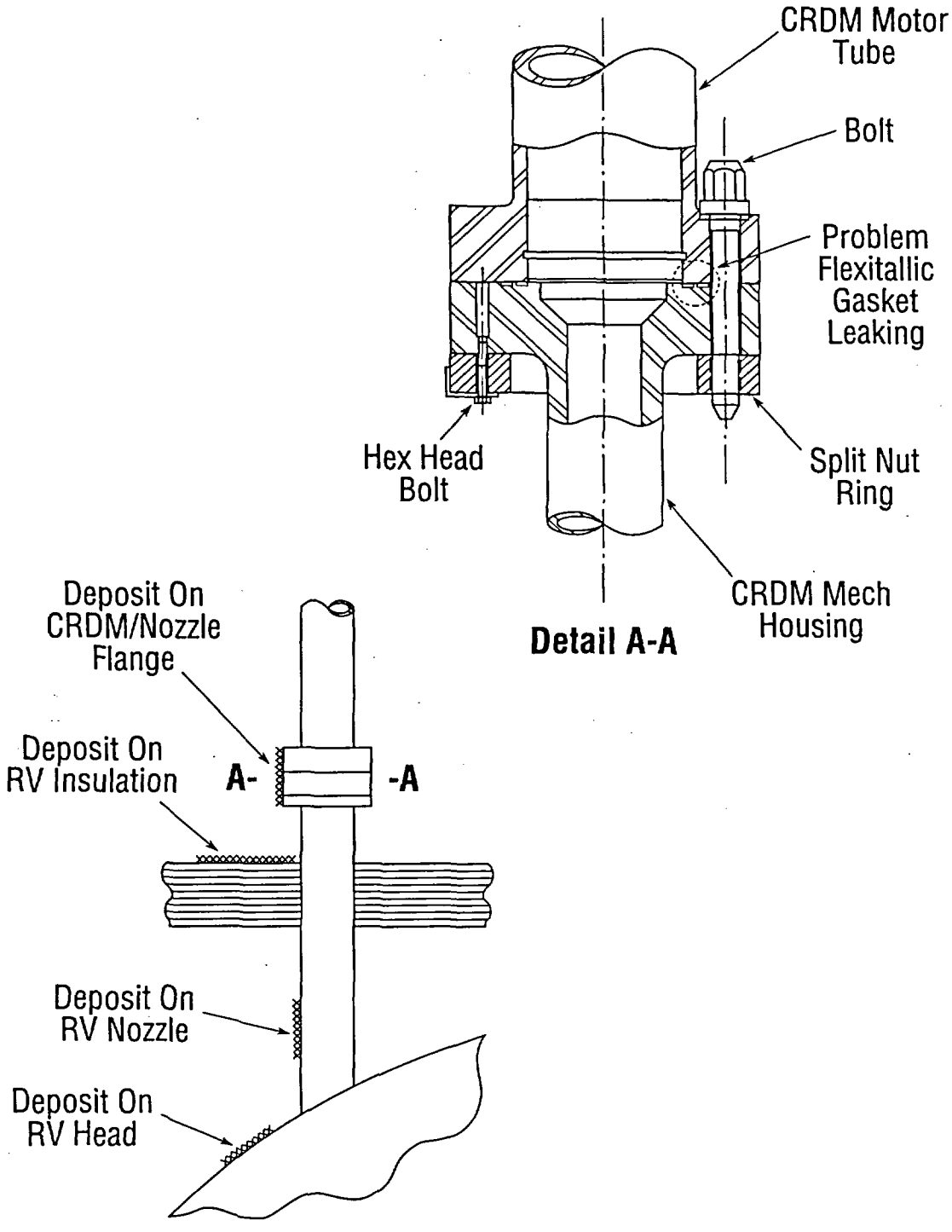

Figure 6.9 Inspection Areas for Boric Acid Deposits (B&W Plants)

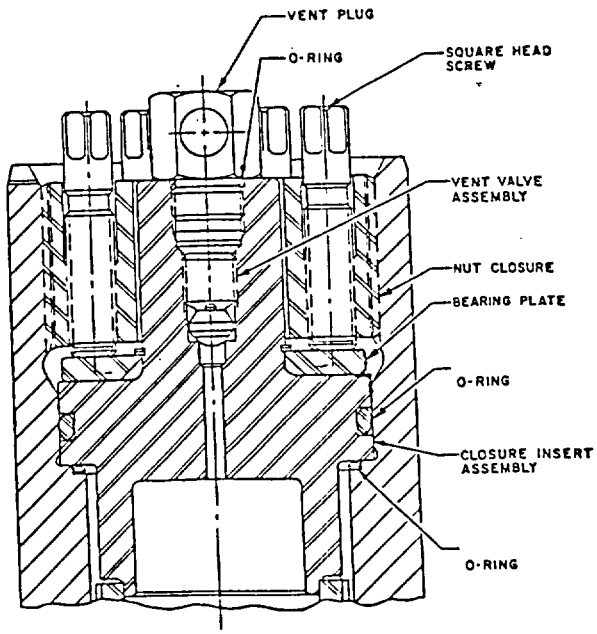

Figure 6.10 B&W CRDM Vent Valve

and left uncorrected. Subsequent inspections, however, revealed severe corrosion on the cooling shroud and other components.

Coolant leaks from other components were also noted. Combustion Engineering identified several leaking CEDM pressure housings at Palisades, which when removed and inspected, revealed circumferential cracks on the seal housings. Similar cracks were found on the remaining two housings from the same fabrication lot. Additional detailed analysis concluded that the cracks were most likely due to contaminant induced stress corrosion cracking. However, other housing cracks identified in the remaining CEDM housings, and at Fort Calhoun, indicate that the root cause of the failures was lack of, or inadequate, venting, creating conditions conducive to transgranular stress corrosion cracking.

B&W plants also have experienced coolant leakage from the CRD vent valve (Figure 6.10). This valve is opened to bleed and vent the CRDMs following each refueling. Mechanical wear, resulting in a decrease in the torque on the jacking screws, and o-ring degradation, were the root causes for the leaks. B&W has addressed this problem by redesigning the valve. The bleeding process has also been simplified, decreasing the spill potential, and the jacking screws have been replaced with a hydraulic sealing mechanism.

The corrosion rate of low alloy and carbon steel caused by boric acid may be greater than previously estimated, as discussed in Section 5.0. This highlights the need for continued monitoring of leakage, and its rapid correction. Utilities should consider a scheduled replacement of these components, as opposed to waiting till leakage appears.

6.4.3.2 Stator Failures

Stator failures, due to electrical degradation and overheating, were also reported. The stators were particularly susceptible to moisture failures due to their location on the outside of the CRD

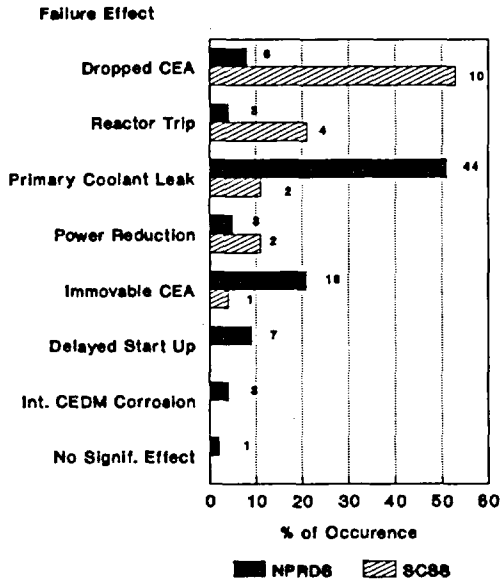

Combustion Engineering

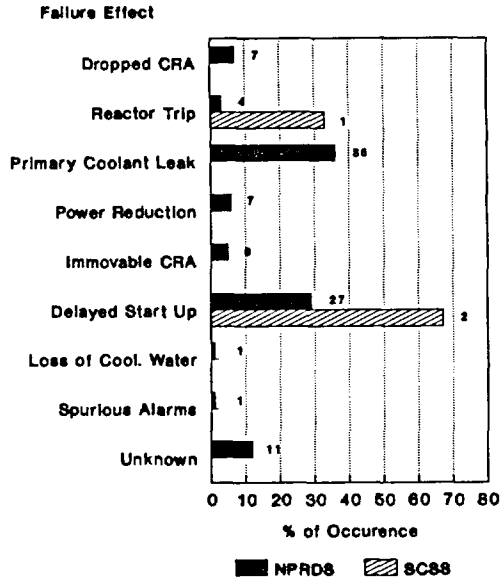

Babcock & Wilcox

Figure 6.11 Control Rod Drive Mechanism Failure Effect

pressure housing, below the vent valves. This location exposes them both to coolant spills during venting and a humid operating environment.

B&W identified four root causes for the stator failures; epoxy breakdown due to wire incompatibility, moisture intrusion, bifilar design, and fabrication defects. Moisture intrusion into the stators was due to degradation of the o-rings which seal the stator housing against the CRD housing, and leakage from the stator cooling water system. Typically this problem was discovered during the pre-operational 500 v meggering which tests the integrity of the electrical systems. A resistance reading less than 200 megohms was usually traced to stator moisture. To correct this, the stator is removed and energized to drive off the entrapped moisture, and retested before being returned to service.

6.4.3.3 Inoperable CRDMs

Inoperable CRDMs due to broken internals were reported to the NPRDS data base. As described in Section 5.1, this problem was documented by the NRC in Information Notice 85-38. This Notice documented two separate occurrences at Davis Besse, four years apart, where internal CRDM pieces fractured and jammed the leadscrew preventing CRDM movement.

The first event, in 1981, was discovered when a CRA would not withdraw following a reactor trip. Dis-assembly and inspection revealed that the leaf spring anti-rotational device on the leadscrew nut assembly had fractured into several fragments. These fragments became stuck between the buffer spring and the leadscrew, preventing the leadscrew from moving. Since no other similar instances had been reported, it was concluded that this was an isolated occurrence. However, while performing rod drop tests in 1985, another CRA failed to insert within the time specified by the Technical Specification.

Examination revealed that a set-screw fragment from a CRDM handling tool had jammed the leadscrew again, preventing disengagement of the latching mechanism. A broken leaf-spring on the top of the leadscrew was also discovered. The brittle, inter-granular spring failure was caused by mechanical interference between the torque tube cap and the top of the CRDM housing. Improper seating of the spring caused it to extend further than designed and to strike the torque tube cap when raised. Inspections of the remaining CRDMs discovered four additional CRDMs with improperly seated leaf springs.

Maintenance procedures were modified to include visual inspections of the CRDM handling tools, before and after use, to detect broken or missing parts. Visual techniques were instituted to verify the proper positioning of the leaf springs, since prior to these occurrences there was no requirement to verify this.

The effect of CRDM failure was dependant upon the specific failure type (Figure 6.11). Stator shorts occurring during operation typically resulted in dropped or slipped rods, and depending upon the power level at the time of the incident, and the time required to recover the rod, led to power decreases, and reactors scrams. Failures discovered during normal maintenance testing during outages delayed reactor startup for repairs.

6.4.4 Rod Position Indication Failures

Both B&W and CE use similar redundant systems for control rod position indication. The absolute position indication system consists of magnetically operated reed switches for actual rod position indication, and the relative position indication system provides an indication of the demanded rod position. Each design has shown susceptibility to age degradation and failures (Figure 6.2).

The location of the position indication systems in the plant exposes each to different stresses leading to age degradation, as discussed in Section 4.3. The reed switches, which are housed in a tube alongside the CRD housing, are exposed to similar mechanical, electrical, and environmental stresses as the CRDM. The relative position indication system, which counts pulses resulting from step demands, is located outside of containment, in a controlled environment.

As shown in Figure 6.12, reed switch failures were the main cause of system failure. Typically, failures occurred during operation, and were not immediately repairable. The failures were electrically isolated, minimizing the operational effect. The CE design incorporates redundant reed switch position transmitters and can remain operational with reed switch failures. B&W redesigned the circuitry from a two-channel design, which became inoperable when a reed switch failed, to a four-channel design which remains functional with a failure. Since the replacement of the old two-channel RPI circuitry, the B&W RPI sub-system has performed well. Not all B&W plants have a four-channel design, however.

Control Element Assembly Calculator (CEAC) failure occurrences have led to power reductions and reactor scrams at CE plants. The safety-related CEACs monitor the CEA position and any misalignment, and provide signals to the Core Protection Calculations (CPC). Based on this input, the CPC provides penalty factors to the automatic protection and control system ensuring safe reactor operation. Failed reed switches, which were not immediately recognized, have generated overly-conservative penalty factors, and subsequent power reduction and scrams.

Plant computer malfunctions, due to software problems and electrical component failures typically led to relative position indication failures for CE. Only two instances of RPI failures at B&W plants

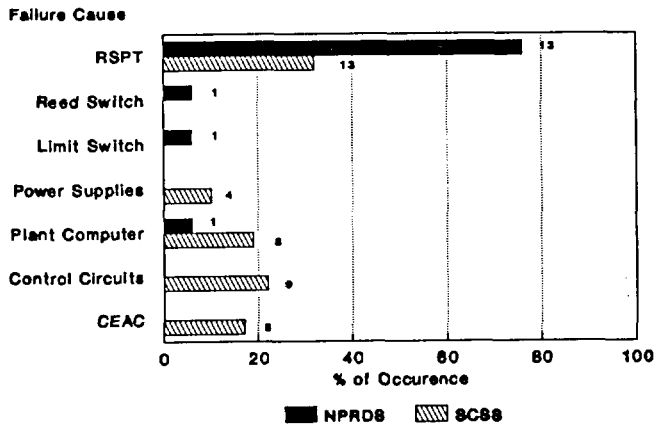

Combustion Engineering

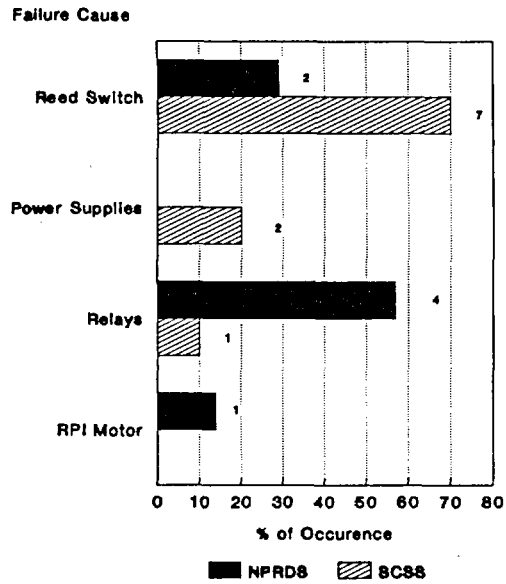

Babcock & Wilcox

Figure 6.12 Rod Position Indication Failure Cause

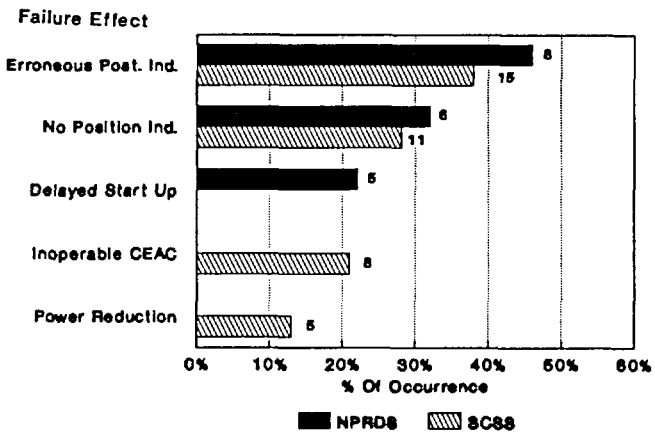

Combustion Engineering

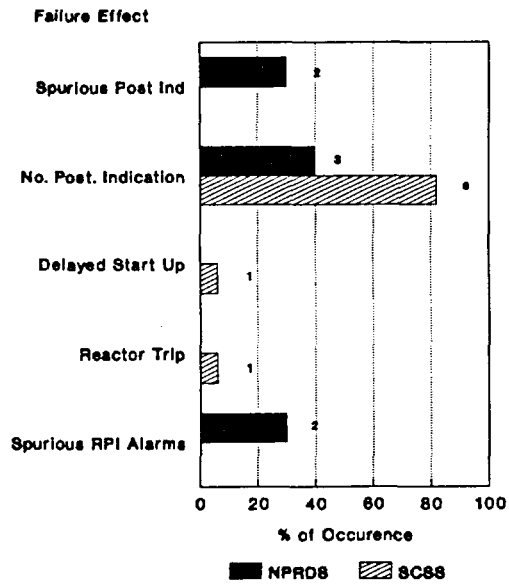

Babcock & Wilcox

Figure 6.13 Rod Position Indication Failure Effect

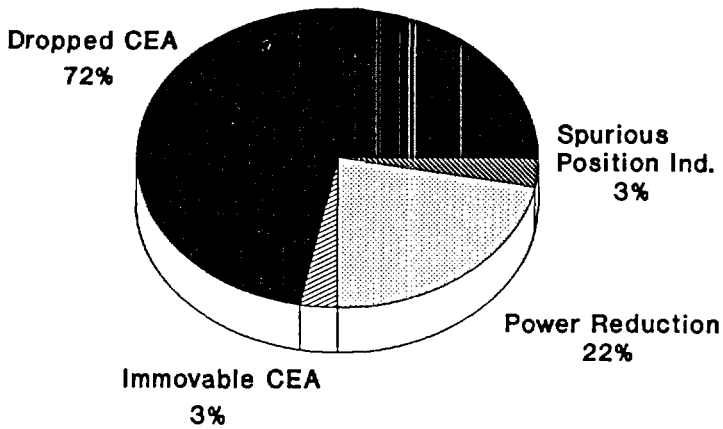

SCSS

Figure 6.14 CE Control Element Drive System Unknown Failures Effect

were noted. At Crystal River, one RPI failure was due to a relay failure, and the other was due to low voltage.

The common effects of these failures were erroneous or loss of position indication signals, resulting in power reductions or a start-up delay to permit maintenance (Figure 6.13). Plant Technical Specifications require redundant position indication signals. When one system fails, power is reduced, and the operators verify the proper position every four hours until the redundancy is available.[31,32] If discovered before operation, the system will be repaired before start-up.

6.4.5 Human Error

Though not an effect of component aging, the CE Control Element Drive System demonstrated a susceptibility to human error as well as component failures due to aging and environmental degradation. Maintenance errors and refueling operations were the prime causes of these incidents, and most of these events resulted in dropped rods and subsequent power reductions. Procedural errors resulting in violations to the plant Technical Specifications were also noted. These occurrences can be eliminated through increased cognizance and understanding of the requirements contained in the individual Technical Specification.

As a result of these human errors, system component damage occurred. An incorrect maintenance procedure at a CE unit permitted high voltage to be applied to the gripper coils causing failure. Several refueling incidents, resulting in bent extension shafts, were noted when the upper internals were being reinserted into the reactor vessel following refueling. These resulted in plant start up delays while the extension shafts were replaced. Section 6.4.7 discusses this particular degradation mechanism, and highlights the potential damage that could be caused to the extension shafts during refueling. The B&W CRDM is removed as a unit with the reactor head, precluding similar damage.

6.4.6 Unknown Failure Cause

As documented in Appendix B, a significant number of LERs documented CE Control Element Drive System failures due to unknown causes. As Figure 6.14 shows, these failures resulted in significant plant effects including dropped or immovable CEAs, spurious position indication, and reactor power reductions. Upon review of these failures, it was noted that many were similar to occurrences with known causes. However, as discussed in Section 6.1, no conclusions were made regarding the causes of these failures. Numerous incidents of dropped and slipped rods affected CE plants early in the 1980s. This problem has been ascribed to sluggish gripper operation with the older CEA Timer, which did not provide for feedback to confirm gripper operation. This allowed the weight of the CEA to be transferred to another gripper which was not correctly engaged, causing the rods to slip.

The significant plant effects which occurred as a result of these failures highlight the need for a thorough root cause assessment to preclude similar events from occurring.

6.4.7 Miscellaneous Failures

The operating database review identified several other significant system failures. These events were not categorized into particular sub-system failures, but did pose operational problems for the system.

While implementing a revision to the rod drop procedure, Arkansas-2 discovered slower-than-anticipated drop times. Before this change, power was interrupted to each CEDM individually, which historically produced acceptable results. The new procedure was revised to reflect actual system operation, and simultaneously tripped all the CEAs by interrupting power to the reactor trip breakers. This led to a slower dissipation of the stored energy in the holding coils, increasing the total drop time.

In response to this event, the NRC issued Information Notice No. 88-47, documenting the occurrence and the potential consequences to plant safety. The increase in drop time necessitated a review of all of the FSAR accident analysis to ensure continued conformance to operating restrictions.

Calvert Cliffs reported a rod drop incident caused by a shorted coil power programmer. The root cause of this incident was not the CPP failure, but rather water seepage from an overflowing control room toilet. The water entered the cable spreading room, resulting in several shorted electrical components.

The CEA which failed at Maine Yankee was a five finger design, with the center rod containing B_4C in the lower portion. Due to the radiation induced swelling of the B_4C, the outer rods did not contain full length B_4C. The root cause of the center rod failure was B_4C swelling due to the total fast-fluence exposure. The swelling caused the clad stress to increase eventually leading to propagation of a crack around the circumference of the rod. This resulted in a broken rod, and the poison pellets fell into the fuel assembly guide tube, preventing CEA insertion.

The design life of the CEA is specified as 10 years (13-14 EFPY). The failed CEA exceeded these limits, and was judged acceptable due to its specific exposure history. This failure highlights the need for tracking exposure of the rods, as recommended in Section 5.0, to prevent this failure from occurring.

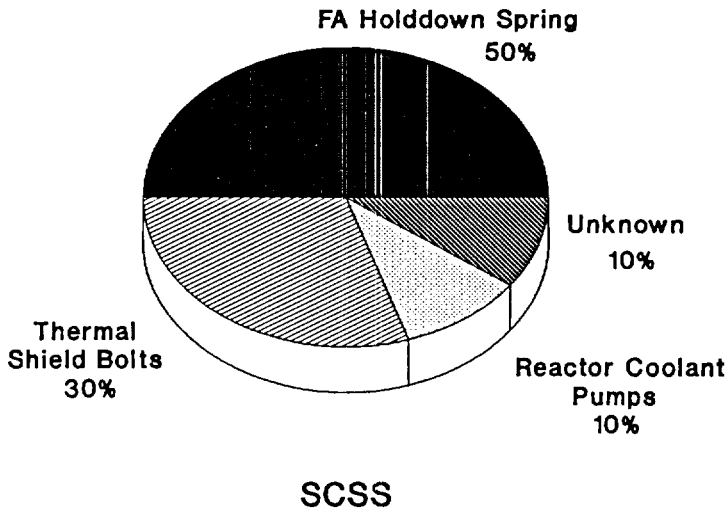

Figure 6.15 B&W Control Rod Drive System Source of Loose Parts

Arkansas experienced a similar stuck CEA, due to foreign material wedging between the control element rod and the guide tube. Loose parts in the core are a potential significant threat to CEA movement, and care must be taken by operating plants to monitor for loose parts.

Babcock & Wilcox reactors reported several instances of reactor internals degradation (Figure 6.15). The sources of debris included broken fuel assembly hold down springs, thermal shield bolts, and reactor coolant pump fragments. The debris and loose parts from these failures could have lodged in the fuel assembly guide tubes or CRDM internals, preventing CRA insertion.

Debris from a damaged reactor coolant pump at Oconee-3 was carried by the coolant to the core where it lodged in the fuel assemblies. Although these fragments were confined mostly to the lower end fittings and the first spacer grid, they could have interfered with CRA insertion.

Broken thermal shield support bolts, primarily due to intergranular stress corrosion cracking, posed similar problems at Oconee-1, Oconee-2, Rancho Seco, and Crystal River. Following detailed metallographic studies, the lower thermal shield was redesigned, and the bolt material changed from A286 to Inconel X750. Locking clips were also attached to the bolts to retain them in the event of failure.

Broken fuel assembly hold down springs were identified at Crystal River, Davis Besse, Oconee-1, and Oconee-3. These plants used the Mark-B fuel assembly design, which consists of one large, helical coil spring, positioned on top of the upper end fitting, and held in place by a spring retainer. These cracks were discovered during regular fuel assembly inspections. Low stress, high-cycle fatigue and stress corrosion cracking were the root causes of the failure. Analysis by B&W concluded that these spring failures would not result in a displaced fracture. However, due to the close proximity of the spring to the control rods and the guide tubes, any piece which may have broken off, could easily have lodged in the guide tube and interfered with CRA movement or caused fretting of the control rod. Instances of broken hold-down springs continue to be reported, as discussed in Section 5.2. Sixty-four failures were identified from 1980 through 1988.

6.5 Summary

The detailed operating experience review discussed in this Section identified the primary aging failure causes, and resultant effects, for both CE and B&W control rod drive systems. These results agree closely to that which would be anticipated when the system is exposed to the operating and environmental stressors discussed in Section 4.0. A close correlation was also observed between these findings and the focus of the NRC and industrial research summarized in Section 5.0.

Significant plant effects resulted from the aging degradation and failure of the control rod drive subsystems. Dropped or slipped rods were the most common effect of power and control subsystem failures. These resulted in power reductions or shutdowns while the rods were re-aligned. System failures which resulted in multiple rod drops led to reactor shutdowns and ESF actuation on several occasions.

Primary coolant leakage, from motor tube housing cracks and seal degradation, was another common failure. The boric acid in the coolant severely corroded nearby components and blocked cooling air passages, resulting in coil failures.

The review of both the CE and B&W operating experience indicated that the control rod drive system failure occurrences have not prevented gravity insertion of control rods. Component failures and degradation did result in increased component stresses and unnecessary thermal and pressure cycles, which challenged the operation of other plant safety systems. This review also highlighted the importance of performing root failure cause analysis. Numerous failures were reported to the data bases with no failure cause given. Multiple failures of the same components occurred before the cause of failure was determined. These failures, and the resulting plant operating effects may have been avoided if the failure cause was determined initially.

7. EFFECT OF COMPONENT FAILURES ON CRD SYSTEM

The control rod drive systems for both CE and B&W plants consist of the five major subsystems described in Sections 2 and 3. Component failures in any one of these may result in degradation and operational failure in any of the other subsystems. To determine the effect of these failures, an individual Failure Mode and Effect Analysis (FMEA) was performed for each subsystem. Each FMEA included the following items:

a) Failure Mode: The basic manner(s) which a component may fail or cease to perform as designed. Failure modes for common components (e.g., electrical components, switches, motors) were obtained from industry reliability standards. For other CRD specific components (e.g., control rods, CRDM) engineering judgement was used to define the failure modes.[33,34]

b) Failure Cause: The particular type of degradation mechanisms which may cause component failure. These stressors (operating and environmental) were discussed in Section 4.0.

c) Failure Effect: The effect on the CRD system caused by the component failure.

d) Aging: A subjective, engineering assessment indicating whether the failure cause is directly attributable or potentially susceptible to time-related effects or environmental degradation.

e) Probability of Occurrence: A subjective assessment of the likelihood of occurrence for each failure cause. The operational experience described in Sections 5.0 and 6.0 was used to determine the probability, and was assigned either a high, medium, or low rating.

7.1 Control Rod Assemblies (B&W and CE)

Table 7.1 shows the FMEA for the Babcock & Wilcox and Combustion Engineering control rod assemblies including the fuel assembly guide tubes and spider assemblies. Though the two designs differ in the number of control rods, the failure modes and effects for the two designs are similar.

A failed CRA does not necessarily compromise safety; however, it does affect plant operation. An inoperable CRA requires that the plant operators ensure sufficient shutdown margin, or repair the problem within the time limitations defined by the Technical Specifications. If a dropped rod cannot be re-aligned with its group within one hour, then a power reduction or plant shutdown is required.

The CE control element rods have a larger diameter and are stiffer than the B&W control rods, which may increase the likelihood of wear between the control rods and the guide tubes due to flow-induced vibration.

Poison swelling is another possible control rod failure cause. This could cause clad cracking, and coolant intrusion into the rod resulting in poison depletion (washout). In the extreme case of a total circumferential-through-wall crack, the lower portion of the rod may break off, allowing the poison pellets to fall out. This would result in decreased shutdown capability and may cause the rods to jam if the debris fell into the guide tubes.

Table 7.1 FMEA - Babcock & Wilcox and Combustion Engineering Control Rod Assemblies

Component	Failure Mode	Failure Causes	Failure Effect	Aging	Probability of Occurrence
Control Rod	Circumferential Through-Wall Crack	High Rod Pressure IGSCC/IASCC Poison Swelling Flow Induced Vibration	Loss of Lower Control Element Rod End Cap Poison Pellet Loss Immovable CRA	Yes Yes Yes Yes	Low (B&W), Medium (CE) Medium (B&W), Medium (CE) Low (B&W), Medium (CE) Low (B&W), Medium (CE)
	Excessive Bow	Fabrication Error Irradiation Induced Bow	Immovable CRA Increased Drag Load	No Yes	Low (B&W, CE) Low (B&W, CE)
	Clad Cracking	Poison Swelling Flow Induced Vibration IGSCC/IASCC	Poison Washout Decreased Clad Strength	Yes Yes Yes	Low (B&W), Medium (CE) Medium (B&W), High (CE) Medium (B&W), Medium (CE)
Fuel Assembly Guide Tube	Bowed or Twisted Guide Tube	Fabrication Induced Irradiation Induced Fuel Assembly Bow	Increased Drag Load Mechanical Wear	No Yes	Low (B&W, CE) Low (B&W, CE)
	Guide Tube Cracking	Flow Induced Vibration Debris Induced Fretting	Immovable CRA Increased Drag Load Decreased Structural Strength	Yes Yes	Low (B&W), High (CE) Low (B&W, CE)
Spider Assembly	Broken Arm	IGSCC Vibration Fabrication	Dropped Rod Immovable Rod	Yes Yes No	Low (B&W, CE) Low (B&W, CE) Low (B&W, CE)
	Inability to Couple/Uncouple From Leadscrew	Debris/Crud Buildup on Male Bayonet Coupling	Increased Force Required to Couple/Uncouple CRA	No	Low (B&W, CE)

7.2 Control Rod Drive Mechanisms

7.2.1 B&W Control Rod Drive Mechanisms[35]

The CRDMs used by B&W consist of a roller nut assembly and a non-rotating leadscrew contained in the motor tube. The CRDMs are flange mounted on top of the reactor vessel head. Table 7.2 shows the FMEA for the major CRDM components.

The main effects of CRDM failure are primary coolant leakage and dropped/slipped CRAs. As with CRA failures, a CRDM failure resulting in a dropped or immovable CRA does not necessarily compromise plant safety, but does affect normal plant operations. Large leaks may represent a small break LOCA and potentially cause the failure and degradation of other components and systems. Leaking vent valves and failed spiral wound flexitallic gaskets are typical causes for primary coolant leakage.

Many CRDM failure mechanisms are age related. As reflected by the low probability of occurrence, aging degradation of other components has not been widely evident, with the exception of primary coolant leakage.

7.2.2 Combustion Engineering Control Element Drive Mechanisms

The CE control element drive mechanisms are flange mounted on top of the reactor vessel head, and consist of a series of magnetically operated latches which engage the CEA extension shaft to effect CEA holding and movement. Table 7.3 presents the FMEA for the magnetic jack type of CEDM. The rack and pinion type of CEDM, with the exception of latch and coil failures, has similar failure modes and effects. As described in Section 6.0, the rack and pinion CEDMs have been primarily susceptible to rotating seal failures resulting in primary coolant leakage.

Several recent core designs used by CE incorporate a 12 element CEA, which control reactivity for four fuel assemblies. Due to the effect upon more than one fuel assembly, failure of these CEDMs may have a greater operational and safety impact.

Primary coolant leakage and dropped CEAs were common effects of system failure. Coolant leakage was also a potential failure cause for several other subcomponents, particularly the stators. All of the identified system failure modes, with the exception of those caused by fabrication, human, or maintenance errors, are aging related. Based upon recent Combustion Engineering operating experience, these failure modes have a high probability of occurrence.

7.3 Control Rod Drive Control Systems

7.3.1 Babcock & Wilcox CRDM Control System

Table 7.4 provides an FMEA for the major components of the B&W CRDM Control System. These components include the system logic necessary to control rod grouping, motion and position, and the power supplies to drive the CRDMs.

Table 7.2 FMEA - Babcock & Wilcox Control Rod Drive Mechanisms

Component	Failure Mode	Failure Causes	Failure Effect	Aging	Probability of Occurrence
Motor Tube	Cracked Housing	SCC	Primary Coolant Leakage	Yes	Low
	Weld Cracks	Vibration SCC Fabrication	Primary Coolant Leakage	Yes Yes No	Low Low Low
Vent Valve Assembly	O-Ring Embrittlement	Thermal Embrittlement Radiation Embrittlement	Primary Coolant Leakage	Yes Yes	Medium Medium
	Mechanical Wear	Operation Induced Human Error	Primary Coolant Leakage	Yes No	Medium Medium
Torque Taker Assembly	Mechanical Wear	Fatigue Debris Maintenance Human Error	Immovable CRA	Yes Yes No No	Low Low Low Low
Leadscrew	Roller Nut Failure	Human Error Mechanical Wear	Immovable CRA	No Yes	Medium Low
	Mechanical Wear	Vibration Between Roller Nuts/Leadscrew	Slipped CRA	Yes	Low
	Bowed Leadscrew	Maintenance Fabrication Induced	Inoperable CRDM	No No	Low Low
	Binding	Debris/Crud	Inoperable CRDM	Yes	Low
Rotor Assembly	Segment Arm Springs Fail Due to Loss of Compression	Radiation Induced Mechanical Failure Fatigue	Immovable CRA	Yes Yes Yes	Low Low Low
	Segment Arm Assembly Pivot Pin Failure	Fatigue Mechanical Wear SCC	Immovable CRA	Yes Yes Yes	Low Low Low
	Roller Nut Failure	Loss of Coolant Mechanical Wear Debris/Crud Vibration	Immovable CRA Dropped/Slipped CRA	Yes Yes Yes Yes	Low Low Medium Low
	Bearing Failure	Mechanical Wear Vibration Debris/Crud Thermal Overheating	Immovable CRA	Yes Yes Yes Yes	Low Low Medium Low
	Thermal Barrier Failure	SCC Vibration Crud/Debris	Thermal Degradation of CRDM Internals	Yes Yes Yes	Low Low Medium
Flexitallic Gaskets	Mechanical Wear Thermal Overheating Material Degradation	Embrittlement Wear Corrosion Maintenance	Primary Coolant Leakage	Yes Yes Yes No	High High High High
Hold Down Bolts	Loss of Torque	Mechanical Wear Galling Vibration Human Error	Primary Coolant Leakage	Yes Yes Yes No	Low Medium Medium Low

Table 7.2 FMEA - Babcock & Wilcox Control Rod Drive Mechanisms (Cont'd.)

Component	Failure Mode	Failure Causes	Failure Effect	Aging	Probability of Occurrence
Buffer Spring	Loss of Spring Force	SCC	High Kinetic	Yes	Low
		Mechanical Wear	Energy Force	Yes	Low
		Fatigue	At End of Scram	Yes	Low
CRDM Cooling System	Inadequate Cooling	Pump Failure	Stator Coil Failure	Yes	Low
		Power Loss		Yes	Low
		Heat Exchanger Failure	Dropped/Slipped	Yes	Low
		Degraded Water Chemistry	CRA	Yes	Low
		Control System Failure	Inoperable CRDM	Yes	Low
		Maintenance Error		No	Medium
		Boric Acid Buildup		Yes	High
Stator Coils	Thermal Overheating	Coolant Pump Failure	Dropped CRA	Yes	Low
		Loss of Forced Air		Yes	Low
		Cooling	Immovable CRA		Low
		Blocked Cooling Passages		Yes	
	Electrical Short	Corrosion	Immovable CRA	Yes	Medium
		Electrical Insulation Degradation	Dropped CRA	Yes	Medium
		Fabrication Error	Erroneous Rod	Yes	Medium
		Moisture	Position Indication	Yes	Medium
		Mechanical Wear		Yes	Low
	Loss of Power	Connector Corrosion	Dropped CRA	Yes	High
		Human Error		No	Medium
		Mechanical Wear	Immovable CRA	Yes	High
		Fatigue		Yes	High
		Control Systems Failure		Yes	High

Table 7.3 FMEA - Combustion Engineering Control Element Drive Mechanisms

Component	Failure Mode	Failure Causes	Failure Effect	Aging	Probability of Occurrence
Motor Housing	Circumferential Cracks	SCC	Primary	Yes	Medium
		Vibration	Coolant	Yes	Medium
	Weld Cracks	Fabrication Error	Leakage	No	Medium
Upper Pressure Housing Assy. with Vent Valve	O-Ring Embrittlement	Thermal Embrittlement		Yes	Low
	Housing Cracks	SCC	Primary	Yes	Low
	Weld Cracks	Radiation	Coolant	Yes	Medium
	Mechanical Wear	Embrittlement	Leakage		
		Human Error		No	Medium
		Fabrication Error		No	Low
		Galling		Yes	Medium
Coil Stack Assembly	Overheating	Blocked Cooling Passages	Dropped/Slipped CEA	Yes	High
		CEDM Cooling System Failure	Inoperable CEA	Yes	Low
	Electrical Short	Corrosion	Dropped/Slipped CEA	Yes	Medium
		Electrical Insulation Degradation		Yes	Medium
		Fabrication Error		No	Low
		Moisture	Inoperable CEA	Yes	Medium
		Mechanical Wear		Yes	Medium
	Loss of Electrical Power	Connector Corrosion		Yes	Medium
		Cable Degradation	Dropped/Slipped CEA	Yes	Medium
		Mechanical Wear		Yes	Medium
		Fatigue	Inoperable CEA	Yes	Medium
		Power Supply Failure		Yes	High
		Human Error		No	Low
Extension Shaft	Mechanical Wear	Mechanical Vibration Between Gripper and Shaft	Slipped/Dropped CEA	Yes	Low
	Bowed Leadscrew	Maintenance	Inoperable CEA	No	Low
		Fabrication		No	Low
	Binding	Debris/Crud	Slipped CEA	Yes	Medium
Latches, Links, Pins	Latches Fail to Engage	Mechanical Wear	Slipped/Dropped CEA	Yes	Low
		Fatigue		Yes	Low
		Crud/Debris	Inoperable CEDM	Yes	Low
		Coil Failure		Yes	Medium
	Latches Fail to Disengage	Coil Failure	Inoperable CEDM No Insertion	Yes	Low
		Crud/Debris		Yes	Low
	Latches Move Out of Sequence	Coil Failure	Slipped/Dropped CEA	Yes	Medium
		Control System Failure		Yes	High
		Crud Debris		Yes	Low

Table 7.3 FMEA - Combustion Engineering Control Element Drive Mechanisms (Cont'd.)

Component	Failure Mode	Failure Causes	Failure Effect	Aging	Probability of Occurrence
Latches, Links, Pins (Cont'd)	Transfer Latches Fail to Operate	Coil Failure	Slipped/Dropped CEA	Yes	Medium
		Control System Failure		Yes	High
		Crud/Debris		Yes	Low
		Broken Latches		Yes	Low
CEDM Cooling System	Inadequate Cooling	Fan Failure	Coil Failure	Yes	Low
		Power Loss	Dropped/Slipped CEA	Yes	Low
		Heat Exchanger Failure		Yes	Low
		Control System Failure	Inoperable CEDM	Yes	Low
		Shroud Failure		Yes	Low
		Boric Acid Buildup		Yes	High

Table 7.4 FMEA - Babcock & Wilcox CRD Control System

Component	Failure Mode	Failure Causes	Failure Effect	Aging	Probability of Occurrence
Transformer	Fails to Operate Due to: Open Circuit	Electrical Insulation Degradation	No power supplied to CRD system resulting in rod drop	Yes	Low
	Shorted Turns	Thermal Overheating	Redundancy Loss	Yes	Low
		Electrical Shorts	Component damage due to high voltage supply	Yes	Low
		Electrical Drift		Yes	Low
Power Supplies (24, +/-15, 5 VDC)	Power Supply: Fails to Operate	Electronic Component Overheating	Loss of Redundancy	Yes	Low
	Output Drift	Electrical Power Surge	Dropped CRAs	Yes	Low
		Electrical Drift	Immovable CRA	Yes	High
		Fuse Failure		Yes	Low
Programmer Motor	Fails to: Operate Upon Demand	Electrical Power Supply Surge	Immovable CRA	Yes	Medium
	Fails to Stop on Demand	Mechanical Binding	Dropped CRA	Yes	Low
	Operates at Wrong Speed	Thermal Overheating	Incorrect insertion/withdrawal rate resulting in power excursion and reactor trip	Yes	Low
		Loss of Power	Incorrect direction of operation	Yes	Low
			Stator damage due to incorrect sequencing of SCRs		

Table 7.4 FMEA - Babcock & Wilcox CRD Control System (Cont'd.)

Component	Failure Mode	Failure Causes	Failure Effect	Aging	Probability of Occurrence
Encoding Lamp	No Power Supplied to Lamps	Loss of Primary/Secondary Lamp Power Supplies	Immovable CRA	Yes	Low
	Decreased Lamp Output	Undercurrent Relay Failure	Dropped/Slipped CRA due to incorrect SCR activation	Yes	Low
	Fails to Operate	Thermal Overheating	No power supplied to stator phases	Yes	Low
			Redundancy Loss		
Photo-Detector	Detector Fails: Open	Loss of Electrical Power	Phase continuously energized resulting in immovable CRA	Yes	Low
	Closed	Electrical Power Surge		Yes	Low
		Degraded Electrical Connections	Phase not energized resulting in dropped or immovable CRA	Yes	Low
		Cable Degradation	Stator damage due to continous power supplied	Yes	Low
Gate Driver	Fails to Operate on Demand	Electronic Component Overheating	Failure to gate on SCR band resulting in no CRA motion	Yes	Medium
		Electrical Noise	Incorrect sequencing resulting in immovable, slipped CRA	Yes	Medium
		Electrical Power Surge		Yes	Medium
Transfer Relays	Fails: Open	Electrical Contact Degradation	Unable to transfer group or single CRA to/from auxilliary regulating power supply	Yes	Low
	Closed	Power Supply Failure		Yes	Low
	Intermittent Operation	Contact Mechanical Wear	Dropped rod/group during transfer operation between power supplies	Yes	Low

Two transformers convert three-phase 480-volt power to six-phase 120-volts for the CRDMs, and provide redundant sources of power. Failure of one transformer will result in a loss of redundancy but should have no additional effect on system operation. This subsystem also contains several additional power supplies which provide power to specific components. Redundant supplies are typically provided for these components to allow continued operation when one fails.

Two programmer motors are used to regulate CRA insertion speed. One motor provides for normal insertion, and the other provides for the slow (or jogging) insertion of the CRAs. These motors control the rotation of the optical disc, which via optical detectors, actuate the SCRs in a controlled pattern resulting in CRA insertion, withdrawal, or holding. Failures of these components may result in immovable CRDMs or dropped CRAs. Stator damage may also occur due to incorrect energization of the stator phases.

A common failure cause for all of the system components was overheating. The electronic components are typically mounted in electrical cabinets which are forced air cooled. This system is degraded by dirty or clogged filters or power loss, resulting in its inability to dissipate the heat generated. If not corrected quickly, component failure may occur.

The operating experience for the system has been good, as reflected by the low failure probability.

7.3.2 Combustion Engineering Control Rod Drive Control System

The CE CRD Control System provides the logic and controls which provide power to the CEDMs to effect individual rod and rod group motion and positioning. The fail-safe system design allows for CEA insertion in the event of a power loss to the CEDMs. Degradation of the control components typically lead to slipped, dropped, or immovable CEAs. The FMEA for this system is provided in Table 7.5.

The control system logic synchronizes and controls CEA motion and positioning by supplying power to the CEDM coils via phase angle firing of SCRs. Degradation and failure of these components are primarily due to electrical stresses. The effect of these failures may include dropped CEAs due to improper gripper operation, and coil damage due to improper energization.

The Automatic CEDM Timer Module (ACTM) is an upgrade replacement for the CEA Timer Module in the CEDMCS. The ACTM is a microprocessor based controller which controls and monitors the currents powering each of the coils via non-intrusive current sensors. The current waveforms provide a direct indication of the mechanical movement of the magnetic jack. The ACTM utilizes closed loop control to ensure proper stepping sequences, and has successfully eliminated sluggish gripper occurrences. The ACTM also monitors for high coil currents and inadequate gripper holding currents and takes corrective action. The step pulses generated by the ACTM (for counting by the Plant Monitoring Computer) are based on actual successful steps and not on motion demand signals. The step count may be more accurate with ACTMs. ACTM failure does not typically lead to dropped or immovable CEAs.

Failed subgroup, pulse count, undervoltage, and auxiliary relays may result in improper system operation, including erroneous pulse count position indication and alarms. Relay failures may also result in loss of control/indication signals from/to the Reactor Regulating, Turbine Control, Reactor Power Cutback, and Plant/Reactor Protection Systems.

Table 7.5 FMEA - Combustion Engineering CRD Control System

Component	Failure Mode	Failure Causes	Failure Effect	Aging	Probability of Occurrence
Power Supplies	Fails to Operate	Fuse Failure	Dropped/slipped CEA when transferred to a hold bus	Yes	Medium
	Output Drift	Power Surge		Yes	Medium
		Electrical Noise	Upper Gripper Coil Damage	Yes	Medium
		Thermal Overheating		Yes	Medium
Common Logic Relay Interface	Fails: Open	Thermal Overheating	Loss of signals to/from external reactor control system	Yes	Low
	Closed	Electrical Power Surge		Yes	Low
	Intermittent Operation	Electrical Noise		Yes	Low
		Degraded Electrical Connection		Yes	Low
Logic Housing	Fails to Operate	Loss of Power	Out of synchronous CEA, subgroup and group motion	Yes	Medium
Control System (ACTM)	Intermittent Operation	Power Spike		Yes	Low
		Electrical Noise		Yes	Low
		Degraded Electrical Connection		Yes	Low
Power Switch Assemblies	Fails to Operate	Mechanical Fatigue	Improper voltage to CEDM coils	Yes	Medium
	Fails to De-energize	Power Loss	Dropped/slipped CRA during transfer group to hold bus	Yes	Medium
	Sporadic Operation	Thermal Overheating		Yes	Medium
		Electrical Noise		Yes	Medium

Table 7.5 FMEA - Combustion Engineering CRD Control System (Cont'd.)

Component	Failure Mode	Failure Causes	Failure Effect	Aging	Probability of Occurrence
Relays (Channel, Subgroup, Pulse Count, Undervoltage, and Auxiliary)	Fails: Open	Mechanical Fatigue	Loss of signal to pulse count relay interface resulting in no PI	Yes	Low
	Closed	Mechanical Wear		Yes	Low
	Erratic Operation	Power Loss	Redundancy Loss	Yes	Low
		Power Spike	Erroneous PI Alarms	Yes	Low
		Thermal Overheating	No Undervoltage Indication	Yes	Low
		Electrical Noise	Loss of control/indication signals from/to: Reactor Regulating System, Turbine Control System, Reactor Power Cutback System, Plant/Reactor Protection Systems	Yes	Low
Supervisory Panels	Fails to: Operate	Power Failure	No system status display in Control Room	Yes	Low
	Operates Intermittently	Power Spike	Loss of Redundancy	Yes	Low
		Thermal Overheating		Yes	Low

7.4 Rod Position Indication

7.4.1 B&W Rod Position Indication

Babcock and Wilcox plants use two separate systems to provide continuous redundant rod position indication signals. Tables 7.6 and 7.7 show the FMEA for the Absolute Position Indication System and the Relative Position Indication Systems, respectively. The common failure effects for each system are the loss of position indication, and erroneous or spurious rod position indication signals.

The Absolute Position Indication System (API) consists primarily of reed switches mounted in a housing adjacent to the CRDM pressure tube. In this location, the same stresses which act upon the CRDM housing also affect the API. Mechanical stresses (fatigue, vibration, wear), electrical stresses (degraded connections), and environmental (radiation, temperature, and humidity) are the common failure causes. API component failures result in loss of individual rod or group position indication, spurious alarms (asymmetric rods, group average, no sequence enable), and no feed and bleed permit.

The relative position indication system counts the pulses supplied to the CRD stator which indicates the demanded rod position. Failure of the system to count these pulses results in the stepping motor not operating, resulting in erroneous relative rod and group position indications. When this occurs, the reset relay must be closed to align the reset pulser with the stepping motor. The pulser then supplies dc pulses to the stepping motor, repositioning the RPI output to correspond with actual rod position.

The main failure causes which lead to system degradation are typically electrical in nature (component overheating, degraded electrical connections). The primary effect of RPI failure is a sequence fault caused by incorrect RPI input to the sequence monitor, which checks for greater than 25% overlap at discrete intervals, and results in a sequence operation fault if the rods are out of sequence.

7.4.2 CE Rod Position Indication

Combustion Engineering also uses two redundant methods to provide rod and group CEA position indications. The reed switch position indication system uses a series of magnetically actuated reed switches to provide actual rod position indication. The pulse counting position indication system monitors the pulses generated, in older plants, upon motion demand signals, or in plants with the ACTM upgrade, upon successful motion completion. FMEA's for both of these systems are provided in Tables 7.8 and 7.9.

Due to the location adjacent to the CEDM, reed switch position transmitters are susceptible to mechanical, electrical, and environmental stresses. The predominant effect of component failure is the loss of, or erroneous input to the rod position indication system. In plants with a Core Protection Calculator System, this may result in spurious automatic reactor trips. These failures may also result in erroneous penalty factors generated by the CPC.

Failure of the pulse counting position indication system is typically due to failure of the monitoring system which counts the pulses provided to it. The effect of RPI failure depends upon whether the failure occurs during times of rod motion. Failures during rod motion result in a spurious CEA deviation or out-of-sequence alarm. The primary effect of failures occurring during no rod motion is a spurious CEA deviation.

Table 7.6 FMEA - Babcock & Wilcox Absolute Position Indication System

Component	Failure Mode	Failure Causes	Failure Effect	Aging	Probability of Occurrence
Reed Switches	Switch Fails:		No Rod Position Indication		
	Open	Boric Acid Corrosion	Spurious Rod Position	Yes	Low
	Closed	Fatigue	Indication	Yes	Low
	Partially Open Upon Signal	Mechanical Wear	Erratic Rod Position	Yes	Low
	Partially Closed Upon	Vibration	Indication	Yes	Low
	Signal	Thermal Overheating	Spurious High/Low	Yes	Low
		Radiation Degradation	Asymmetric Rod	Yes	Low
		Moisture Intrusion	Indication/Alarm	Yes	Low
		Electrical Connection	Spurious High/Low Group	Yes	Medium
		Degradation	Average Alarm/Indication		
			Loss of Redundancy		
Resistors	Out of Tolerance Resistance:	Overheating	Spurious Rod Position Indication	Yes	Medium
	Resistor Fails Open	Material Degradation	No Rod Position Indication	Yes	Low
		Vibration	Erratic Rod Position Indication	Yes	Low
	Resistor Fails Closed	Electrical Contact Degradation	Spurious Group Average Indication	Yes	Medium
		Boric Acid Corrosion	Spurious Asymmetric Rod Indication	Yes	Medium
Group Average Amplifier	Amplifier Fails	Component Overheating	Incorrect High/Low Rod and Group Average Indication	Yes	Low
	High	Electrical Noise	No Group Average Indication	Yes	Medium
	Shorted	Power Surge	Erratic Rod and Group Average Indications	Yes	Medium
	Low	Maintenance Testing	Spurious Rod Group Average and Rod Alarms	No	Medium
		Human Error	No Sequence Enable Function	No	Low

Table 7.6 FMEA - Babcock & Wilcox Absolute Position Indication System (Cont'd)

Component	Failure Mode	Failure Causes	Failure Effect	Aging	Probability of Occurrence
Limit Switches	Switch Fails: Open Closed Fails to Fully Open or Close Upon Demand	Same as Reed Switch Failure	No Sequence Enable Function No Automatic or Out Inhibit Signals No Feed and Bleed Permit Signal No CRA Full In or Full Out Signal Spurious Full Out/In Signal Loss of Redundancy	Same as Reed Switch Failure	Same as Reed Switch Failure
Position Indicator	Fails on: High Indication Low Indication No Position Indication Change on Demand	Electrical Connection Degradation Mechanical Wear Maintenance Error	Erroneous High/Low Position Indication No Rod Position Indication Erratic Rod Position Indication	Yes Yes No	Low Low Low
Position Select Switch	Switch Fails: Open Closed	Mechanical Wear Electrical Contact Degradation Electrical Power Surge Maintenance Error	Unable to Select Desired Position Indication System Spurious Rod Fault Signals Erroneous Rod Position	Yes Yes Yes No	Low Low Low Low

Table 7.7 FMEA - Babcock & Wilcox Relative Rod Position Indication System

Component	Failure Mode	Failure Causes	Failure Effect	Aging	Prabablity of Occurrence
Position Reset Switch	Switch Fails: Open	Mechanical Wear	No power/erratic power supplied to reset pulsar resulting in inability to reset RPI output to actual rod position	Yes	Low
	Closed	Thermal Overheating		Yes	Low
	Fails to Operate Upon Demand	Electrical Contact Degradation		Yes	Low
		Electrical Power Surge	Incorrect directional signal sent to reset pulsar resulting in incorrect RPI motion	Yes	Low
		Maintenance Error		No	Low
Reset Pulsar	Fails to Operate Upon: Demand	Thermal Degradation	No DC pulses sent to stepping motor to correct RPI output to correspond with API	Yes	Low
	Operates on No Signal	Electrical Short		Yes	Low
		Electrical Noise		Yes	Low
		Electrical Power Surge	Spurious DC pulses supplied to stepping motor resulting in incorrect RPI	Yes	Low
		Degraded Electrical Connection		Yes	Low
		Fails Position Reset Switch		Yes	Low
Stepping Motor	Fails to Position:	Mechanical Wear	Failure to drive potentiometer resulting in no change in RPI	Yes	Medium
	Fails to Operate Upon Demand	Bearing Failure		Yes	Medium
	Fails to Position Correctly	Thermal Overheating	Spurious or erratic signals to potentiometer resulting in erroneous RPI	Yes	Medium
		Electrical Contact Degradation		Yes	Medium
		Electrical Power Surge	Incorrect direction of operation resulting in erroneous potentiometer output	Yes	Low
		Maintenance Error		No	Low

Table 7.7
FMEA - Babcock & Wilcox Relative Rod Position Indication System (Cont'd.)

Component	Failure Mode	Failure Causes	Failure Effect	Aging	Prabablity of Occurrence
Potentiometer	Component Fails:				
	Open	Overheating	No signal sent to amplifier resulting in no PI	Yes	Low
	Closed	Degraded Electrical Connection	Erratic signals to amplifier resulting in erroneous PI	Yes	Low
	Output Drift	Electrical Power Surge		Yes	Low
Reset Relay	Fails to:				
	Open	Mechanical Wear	Incorrect PI	Yes	Medium
	Close	Contact Contamination	Incorrect group average signal	Yes	Medium
	Spurious Operation	Overheating	Stepping motor inoperable with reset pulsar signal	Yes	Medium
		Electrical Surge		Yes	Low

Table 7.8 FMEA - Combustion Engineering Reed Switch Position Indication System

Component	Failure Mode	Failure Causes	Failure Effect	Aging	Probability of Occurrence
Reed Switch	Switch Fails: Open	Electrical Connection Degradation	No CEA position indication to plant monitoring system	Yes	Medium
	Closed	Boric Acid Corrosion	Erratic CEA position indication signal to plant monitoring system	Yes	Low
	Fails to Fully Close Upon Signal	Moisture Intrusion		Yes	Low
	Fails to Fully Open Upon Signal	Mechanical Vibration	No UEL or LEL indicaiton	Yes	Low
		Mechanical Wear	Incorrect CEA misalignment faults	Yes	Medium
		Fatigue	Spurious reactor trips	Yes	Low
		Radiation Degradation		Yes	Low
		Thermal Degradation		Yes	Low
Fixed Resistor	Resistor Fails: Open	Overheating	Erratic CEA position indication	Yes	Low
	Closed	Electrical Contact Degradation	Spurious Rod Drop Alarms	Yes	Medium
	Resistor Out of Tolerance	Mechanical Vibration	Spurious CEA Deviation Alarm	Yes	Low
		Boric Acid Corrosion		Yes	Low
Amplifier	Component Fails: High	Thermal Overheating	Spurious signal supplied to CEAC	Yes	Low
	Low	Electrical Degradation	No PI signal to CEAC	Yes	Low
	Shorted	Electrical Noise		Yes	Low
		Electrical Power Spikes		Yes	Low

Table 7.8 FMEA - Combustion Engineering Reed Switch Position Indication System (Cont'd)

Component	Failure Mode	Failure Causes	Failure Effect	Aging	Probability of Occurrence
Cable	Open Circuit	Thermal Overheating	Erratic signal supplied to RSPT	Yes	Medium
	Electrical Short	Radiation Degradation	No signal supplied to RSPT	Yes	Medium
	High Resistance	Moisture		Yes	High
		Boric Acid Corrosion		Yes	High
		Testing Error		No	Medium
CRT Display	Failure to Display	Power Failure	No CEA Position Indication	Yes	Low
		Power Spike		Yes	Low

Table 7.9 FMEA - Combustion Engineering Pulse Counting Position Indication System

Component	Failure Mode	Failure Causes	Failure Effect	Aging	Probability of Occurrence
Plant Monitoring Systems	Fails to Operate Operation	Loss of Electrical Power Electrical Noise Electrical Power Surge	Spurious CEA Deviation Alarm out-of-sequence Alarms	Yes Yes Yes	Medium Medium Medium
Pulse Count Relay Interface	Relays Fail: Open Closed Operate Intermittently	Mechanical Fatigue Contamination Overheating Electrical Connection Degradation Electrical Power Surge	-Loss of indication pulses sent to CEDM -Incorrect indication of CEDM pulses -Redundancy loss	Yes Yes Yes Yes Yes Yes	Low Low Low Low Low
CRT Display	Failure to Display	Power Failure Power Spike	Redundancy Loss No Position Indication Display	Yes Yes	Low Low

7.5 Control Rod Drive Cooling System (B&W and CE)

FMEAs for the B&W and CE control rod drive cooling systems have been incorporated into the CRDM FMEA [Table 7.2 (B&W) and Table 7.3 (CE)].

7.6 PRA Insights

In addition to an FMEA, probabilistic risk assessments (PRAs) may also be used to determine the effects of component failure. However, where an FMEA typically will assess the immediate effect of component failure on the sub-system or system, a PRA will extend this to the overall plant level. Several B&W and CE PRAs were reviewed to determine the specific plant effect due to these failures. The four specific plant PRAs which were reviewed were Calvert Cliffs 1, Arkansas 1, Oconee 3, and Crystal River 3.

Though CRD system failure was not specifically addressed in any of the PRAs, it was included in the Reactor Protection System (RPS) analysis. In all instances, CRD failures were not significant contributors themselves to plant risk, due to the fail-safe design of the control rods. However, if a CRD system failure causes a plant trip, this challenges safety systems, and would be reflected in the PRA as an increase in initiating event frequency and ultimately in plant risk.

7.6.1 Calvert Cliffs 1 (CE)[36]

A system fault tree model was developed in the PRA for the RPS system. The configuration boundary encompassed NSSS parameter measurement channels, bistable trip units, protective system logic, CEDM power trip parts and RPS testing system. The analysis determined that a reactor scram from full power would be successful if only one CEDM power supply bus de-energized, resulting in the insertion of half of the CEAs. The top event for the RPS fault tree was a failure to scram if less than 41 CEAs entered the core when required. Contributing events to this failure were:

1) CEDM hold latches fail to release,
2) CEDM hold coils fail to de-energize, and
3) reactor core mechanical disruption prevents the insertion of greater than 31 CEAs.

The RPS fault tree developed for the Calvert Cliffs 1 PRA was not used in the quantification and accident sequence evaluation due to the low failure estimates. Reliability estimates based upon operating experience provided a more realistic estimate of RPS failure.

7.6.2 Arkansas 1 (B&W)[37]

The RPS fault tree in the ANO-1 PRA was developed to signify failure to achieve a satisfactory reactor trip when demanded. Failures which contributed to this included RPS logic relay failures, trip breaker failures, and mechanical failures of the control rods which prevented their insertion in the core.

The fault tree development began at the RPS trip breakers and relays, and was developed back to the reactor trip parameters (i.e., high reactor coolant temperature, low reactor coolant pressure). The combination of breaker/breaker and breaker/relay failures formed the top intermediate events. Cable faults which represent shorts to power, were low probability events and were included for completeness. Control rod drive mechanism mechanical faults were included as one of the RPS fault tree primary events, with an event probability of zero.

The probability of RPS failure was calculated to be 4.2×10^{-6}, and no RPS cut-set was greater than 1×10^{-6}.

7.6.3 Oconee 3 (B&W)[38]

A fault tree analysis of the RPS was not performed in the Oconee 3 PRA. Estimates of RPS unavailability used to assess the frequency of Anticipated Transient Without Scram (ATWS) and transient sequences were obtained from NRC and EPRI publications. These estimates, which were based upon statistical evaluations of the data on failure and demand, indicate a wide uncertainty band of 10^{-4} to 10^{-6} per demand. The approach in the Oconee 3 PRA for RPS unavailability was to use the NRC value of 3×10^{-5} per demand at 50 percent confidence. This value was a median estimate and a conservative assumption was used as a mean value in the evaluation of ATWS sequences. The use of this RPS unavailability value indicated that ATWS sequences were not significant contributors to the overall plant risk. Therefore, a more refined estimate with a detailed RPS fault tree model was not performed.

Inadvertent CRA withdrawal and drop events were determined to have no effect on the other reactor systems. Thus, these events were treated as reactor trip events, and event frequencies were judged to be very low. The consequences of these events were limited to brief RCS overpressure conditions.

7.6.4 Crystal River 3 (B&W)[39]

A detailed RPS fault tree was used in the Crystal River 3 PRA to identify events which contributed to a failure to insert the control and safety rods when required. The top event of the fault tree was the failure to insert six or more control rod groups. In this model, failure to remove power to the CRDM motors constituted RPS failure. Core description which inhibited CRA insertion, and stuck rods, were included as contributors to reactor trip failures.

The dominant contribution to RPS unavailability was due to test faults of the reactor trip modules. Faults in the CRD power train primary (ac power) breakers, and secondary (DC power) breakers contributed approximately 35% of the total RPS unavailability. Other contributors were core description which inhibited rod insertion, an insufficient number of CRAs dropping into the core, and common mode failures in RPS instrumentation. These contributions were negligible since failure probabilities were assessed to be less than 10^{-8}.

7.6.5 Conclusions

From the review of the four PRA studies of the B&W and CE control rod drives, it was concluded that these systems were not modelled as broadly and as detailed as other important emergency systems, such as emergency core cooling systems. The less detailed fault tree modelling was primarily related to fundamental reactor design reasons. Generally, the RPS is a highly reliable system which is designed to allow gravity insertion of the control rods by gravity upon demand. Also, in assessing initiating event frequency for accident sequence evaluations, operating experience indicated that failures of the control rod drive system were rare. This fact was primarily responsible for not performing a detailed RPS fault tree model. The RPS fault trees for the PRAs evaluated were constructed so that the overall risk assessment of the plant was complete.

8. CRD Inspection, Surveillance, Monitoring, and Maintenance Review

Upon completion of the operating experience reviews for the B&W and CE designed control rod drives, as described in Section 6.0, BNL prepared detailed questionnaires for each design. The questionnaires concentrated on areas indicating increased failure or repair rates and which were most critical to the continued operation of the CRD system. Specific information regarding the plants corrective and preventive maintenance programs was requested. The questionnaires were sent to the plants and returned to EPRI which then forwarded them to NUMARC, which then sent the responses to BNL. Two of the eight operating B&W units, and four CE utilities responded, representing eight of fifteen total operating CE units. Plant operating and maintenance procedures also were received from several utilities. Meetings were held with B&W and CE to obtain further information on CRD design, operating, and maintenance experience. The questionnaires which were sent to CE and B&W utilities are included in Appendix C and D, respectively.

8.1 Babcock and Wilcox Plants

A system design comparison between the two survey respondents, designated as plants A and B, is shown in Table 8.1. Both plants use similar control rod assemblies and part-length axial power shaping rod assemblies. Each plant has accumulated approximately ten years of operating time on the CRDMs. Plant A uses the original Type A design, while Plant B utilizes the improved Type C. The major design improvements of the Type C CRDM include:

a) decreased operating power because of improved magnetic properties of the center section of the motor housing,

b) increased stator assembly cooling due to cooling water grooves machined into the casing rather than being wrapped on the outside,

c) varnish impregnated encapsulated stator's instead of epoxy encapsulated, and

d) belleville springs, instead of helical springs in the buffer assembly.

Table 8.1 Babcock & Wilcox System and Component Description

	Plant A	Plant B
Number of CRDMs	69	61
CRDM Type	A	C
Accumulated CRDM Operating Time	10 yrs.	10 yrs.
CRA Description	61 full length CRAs. Ag-In-Cd poison material.	53 full length CRAs. Ag-In-Cd poison material.
Representative Reactor-Vessel Head Ambient Temperature	150°F	130-150°F
Representative Stator Temperature	115°F	90-105°F
Reed Switch Type	Straight Axial Lead	R4C

The lower average temperature for the Type C mechanism reflects the improved cooling characteristics and the decreased power requirements. Heat generation in the stator depends upon current flow and the resistance. Both units operate below the maximum design temperature of 180°F. Operating procedures require that a mechanism which reaches 180°F be de-energized, and the reactor tripped if more than one CRDM reaches this maximum temperature. Plants A and B use thermocouples mounted in the top filler bushing to monitor stator temperature. The plant computer at each unit monitors the temperature during operation, and provides an alarm to the operator if the temperature is excessive.

Neither plant reported any major operational difficulties with the CRD system. There was no abnormal interference or crud buildup for the control rods or the guide tubes. Neither plant performs any regularly scheduled maintenance or inspections on the CRDMs. Plant A reported a one-time special inspection on the guide tubes and the leaf springs on the torque tube, in response to operational problems experienced at another plant.

As discussed in Section 6.0, the operational performance history of the B&W rod position indication system has been good, and this is supported by the survey responses. Neither plant has experienced any major problems or failures with the RPI system. Plant A replaced all the absolute position indication (API) system cabling on the reactor head, including some to the reactor building penetrations. Plant B reported two reed switch failures, and five relative position indication gearbox and stepping motor failures due to binding.

Each plant reported isolated failures associated with the control and power systems. Plant B has replaced six programmers and command modules, two sequence monitors, and three logic related cards. Plant A reported isolated, non-related module failures.

Both plants have made, or are making significant improvements in system and components, as shown in Table 8.2. Primary coolant leakage, has resulted in numerous incident reports to NPRDS, and an NRC Information Notice alerting all PWR utilities to reported occurrences of such leakage and its potential deleterious effects. Most leaks have been caused by the aging and deterioration of the spiral wound asbestos/stainless steel gaskets, the primary seal between the reactor head and the motor tube. Both plants retrofit these gaskets when leakage is discovered. The original asbestos filled, spiral-wound design is being replaced with a graphite-filled stainless steel spiral wound design. Plant A has upgraded approximately 20% of the mechanisms, while Plant B has retrofitted 36%.

The vent valve assembly was another source of primary coolant leakage. This valve is used to bleed off non-condensible gases before restart, after removal of the reactor vessel head. Component wear and improper assembly were the primary causes of leakage. Babcock and Wilcox has redesigned the vent valve assembly, replacing it with a quick vent type. This change has resulted in quicker and simpler venting, reducing instances of reactor coolant spillage. Plant B has retrofitted all of the CRDMs to the quick-vent design. Plant A continues to use the original design, but has instituted a maintenance program to clean, inspect and lubricate the vent valves. Several spills, not caused by vent valve operation, were reported during fill and vent operations, resulting in damage to the stators and the rod position indicating systems.

Both plants have incorporated minor improvements into the CRDM cooling system. Both plants have installed flexible braided hoses with quick disconnect connections on the stator supply and return lines (Figure 8.1). Each of these changes minimizes the time needed to connect and dis-connect the cooling lines, thus reducing radiation exposure to maintenance personnel and cooling water spillage.

Table 8.2 Major Sub-System Modifications -- B&W Plants

	Plant A	Plant B
Flange Seals Original Equipment New Design Number of New Seals Installed	 Asbestos Filled Spiral Wound Graphite Filled Stainless Steel Spiral Wound 14	 Asbestos Filled Spiral Wound Graphite Filled Stainless Steel Spiral Wound 22
Vent Valve	Original Design	Quick Vent Type
Cooling System	Flexible Braided Hoses with Quick Disconnect Connections Installed on each Stator Supply and Return Lines	Flexible Hose with Quick Disconnect Connections Installed on Each Stator Supply and Return Lines
Cables and Connectors	Replaced EPR Insulated Cables and Connectors with Silicone Insulated Cables and Connectors. Cables Covered with Stainless Steel Braided Jacket Instead of Fiberglass Braid.	Replaced Some Power Connector Pin Support Inserts from Neoprene to Silicone.
Control System Modifications	Asymmetric Rod Runback Modified to a Dropped Rod Runback. Gate Drive Units Modified.	Direction Error Circuitry Modified. Rod Stop Pushbotton Added to Inhibit all Rod Motion.
Miscellaneous Out-of-Containment Modification	Added Test Panels to Facilitate Rod Drop Time Testing, and API Calibration. Added Shunt Trip Feature to DC Breakers.	--------

However,these changes did not eliminate maintenance errors entirely, Plant B reported incomplete coupling attachment to three stators, which were energized for three days before the error was discovered. Subsequent testing on the affected stators revealed no apparent problems; however, replacement is scheduled for the next refueling outage.

Embrittlement of the original neoprene insulated cables and connectors caused both plants to replace them with silicone-insulated ones. Plant A has also replaced all of the fiberglass braided position indication and temperature control cables with stainless steel braided jacket cables.

CRD control system modifications have been instituted at both units. Plant A changed the asymmetric rod runback alarm to a dropped rod runback. The gate drive units were also modified to improve reliability. Auxiliary test panels were installed to facilitate testing the control rod drop and for API system calibration and troubleshooting. Plant B modified the rod direction error circuitry to improve reliability, and added a rod stop button to inhibit rod motion. Both units monitor the various logic power supplies during operation to alert operators to malfunctions or failures.

8.1.1 Preventive Maintenance and Inspection Practices

Table 8.3 summaries information on preventive and corrective maintenance programs, obtained from the questionnaire.

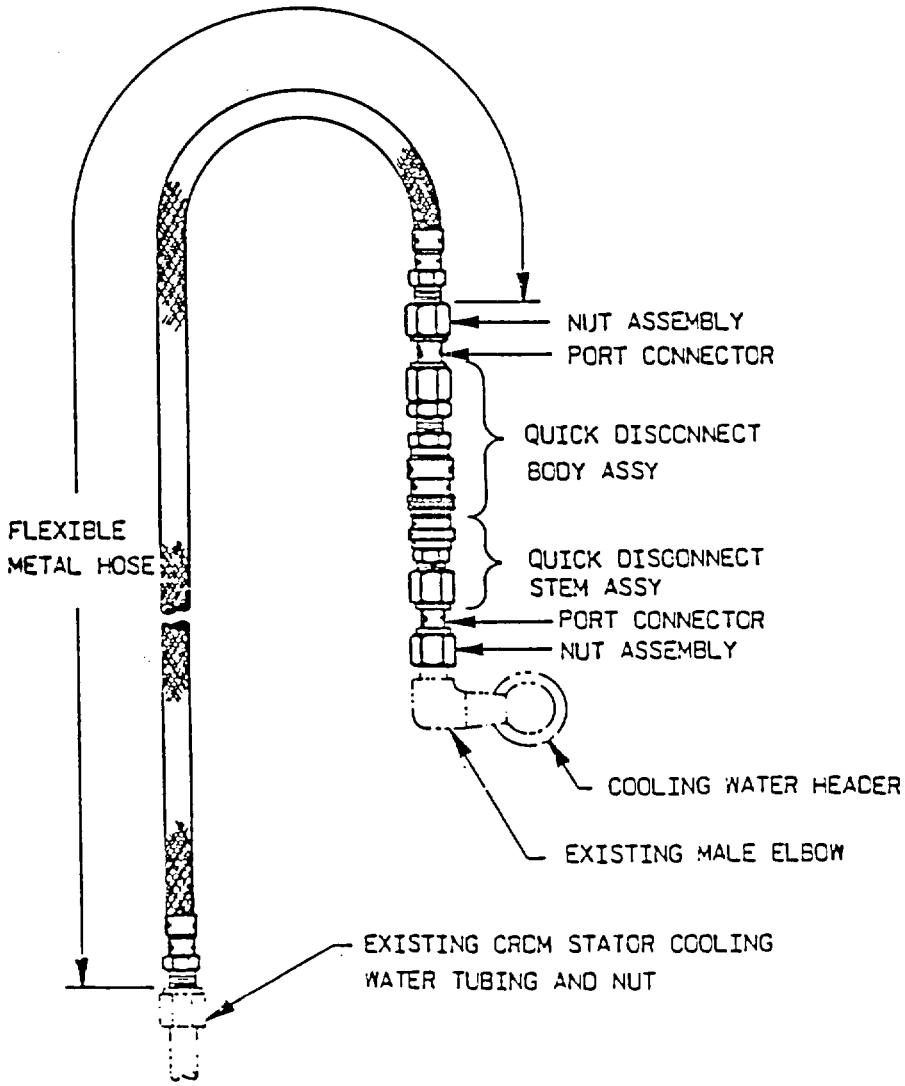

Figure 8.1 CRDM Flexible Hose and Quick Disconnect Couplings

The plants' PM programs do not specifically address the mechanical components of the CRD mechanism, with the exception of the 10 year inspection on motor tube welds as required by the ASME Boiler and Pressure Vessel Code,Section XI. Both plants non-destructively inspect 10% of the welds on the periphery motor tubes, using dye penetrant.

An advantage of the Babcock & Wilcox design, compared to other PWR mechanical latch designs, is that the entire CRD, including the leadscrew, may be lifted with the reactor vessel head during refueling. After being decoupled from the CRA, the leadscrew is fully withdrawn and mechanically held in place to prevent insertion when power is removed from the stator. This permits a visual inspection

Table 8.3 Summary of Preventive Maintenance and Inspection Practices - B&W Plants

	Plant A	Plant B
Roller Nuts	None	None
Leadscrew	None	None
Male Bayonet Coupling	None	None
Motor Tube NDE	Dye Penetrant -- 3 drives every 10 years	Dye Penetrant -- 4 Periphery assemblies every 10 years.
Hyrdostatic	Yes, at refueling	Yes, 10 years.
Miscellaneous	Video leak insp. of CRD flange connection; Bolt and Nut Insp. Leaf Spring Inspection on Torque Tube	--
Flange Seals Gasket PM	None	Yes -- All are inspected
Vent Valves Hydrostatic Tested	Opened at Refuel None	Opened at Refuel None Leak check at system pressure
Stators Physical Insp.	None	None
Electrical	Yes -- 18 months Megger -- Stator Resistance for phases	Yes -- 18 months Stator Coil Resistance 500 v Megger
Cooling System	Visual leak check hydro (10 yrs.)	Check heat transfer from each system
Cables and Connectors Insulation Degradation	Yes (18 months) Megger	Yes (18 months) Megger
Connectors	Yes (18 months)	Yes (18 months) Megger
Moisture Seals	Yes (18 months)	None
Position Indication Systems Physical Insp.	Yes (18 months) -- Visual Insp. -- Cabinet Cleaning	None
Electrical	Yes -- Calibration Test of Cabinet Equipment	Yes -- RPI & API Calibration to rod position

Table 8.3 Summary of Preventive Maintenance and Inspection Practices - B&W Plants (Cont'd)

	Plant A	Plant B
Outside of Containment		
Cables & Connectors	Replace individual stator fuses. Megger power cables	500 v megger power cables and connectors
Power Supplies	Clean, inspect, tighten electrical connections	Check and adjust output voltage
Control & Logic Cabinets	Clean, inspect, calibrate	Clean, Inspect, Calibrate
Other	CRD trip breakers	CRD Trip Breaker
CRDM System Tests		
Control Rod Position Verification	Tech. Spec. Required	Tech. Spec. Required
Drop Time	Tech. Spec. Required	Tech. Spec. Required
Control Rod Exercising	Bi-weekly	Monthly Rod Exercising Procedure

of the male bayonet coupling, if required. While not a trivial inspection due to the high radiation levels, it can be remotely performed if necessary.

Both plants are in the process of upgrading the spiral wound asbestos/stainless steel flexitallic seals with the improved graphite-filled seal on an "as needed" basis when flange leakage is identified. Plant A performs a video inspection for leaks, while Plant B has incorporated the gasket inspection into a PM procedure during refueling. This inspection for boric acid leakage can be performed with the head in place, or with the head removed and stored on the refuel floor. One B&W plant has machined nine viewing ports, one foot in diameter, around the CRDM shroud to monitor for boric acid leakage and ISI inspections.

Table 8.4 shows the B&W recommended annual preventive maintenance.[40] The majority of preventive maintenance inspections performed at both plants are electrical. The CRD stators are functionally checked during each refueling by performing a 500 v megger on the stators and cables, and by checking the resistance of each phase winding. If the phase-to-neutral readings are out of specification, individual phase-to-phase readings are taken (15 for each stator). Similarly, 500v meggering is used to test the integrity of the CRD cabling insulation and connectors during each refueling outage. Plant A performs additional run, latch, and dropout current acceptance tests for each new stator.

The primary cause of megger failures has been stator moisture. The stator assembly is sealed around the motor tube by two o-rings. O-ring degradation allows moisture to accumulate in the stator, which is prevented from leaking out by the lower o-ring. When this condition is identified, the stator is removed from service and powered for the time required to drive the moisture out. To minimize the potential for moisture intrusion, these o-rings should be replaced every time a stator is removed.

Table 8.4 B&W Recommended Annual Stator Preventive Maintenance

A. Electrical Tests

1. DC Resistance
2. Insulation Resistance
3. Thermocouple Resistance

B. Functional Tests

1. Minimum Run Current
2. Latching and Unlatching Current

Electrical tests are also performed on the relative position indication and the absolute position indication systems, at each refueling, in both plants. The API is calibrated by adjusting the amplifiers to agree with actual rod position,and the RPI signals are verified correct using the PI reset pulser to operate the RPI motor to simulate various rod positions. Plant A also inspects the API sensor connections visually and physically.

The B&W designed CRD system uses redundant 5,15,and 24 v DC power supplies. Preventive maintenance practices verify and adjust, if necessary, the output of each power supply. An additional maintenance procedure identifies faulty gate drives and SCR/diode failures in the power supplies which ensure the proper trip function of the gate drive units and SCRs. Each power supply is cleaned during this inspection. Both plants monitor the power supplies which alert the operators to malfunctions.

Plant A includes the control and logic circuitry in their PM program. Each module is calibrated according to specific plant procedures, and a complete cleaning process is performed during refueling outages, including a visual inspection of cabinet mounting bolts and welds, and verification that all fuses are securely mounted and not open. Wires and cables are inspected for loose connections, broken wires, harness chafing, and for any discoloration caused by overheating. The cabinet components are vacuumed, the cabinet cooling system inspected, and the filters removed and cleaned. Plant B did not specifically describe any PM procedure. Though excessively high ambient temperatures have caused logic and control module failures, neither plant monitors the cabinet temperatures. System performance is monitored, however; Plant A uses indicating lights which illuminate upon failure detection, and Plant B uses a data acquisition system to monitor important control signals.

Each plant uses a reliability and trending program for the CRDMs. Plant B monitors three indicators: component failure, stator isolation fuse temperature, and flange gasket replacement. Plant A did not provide any specific program details. Each plant reported tracking system performance at other plants; Plant A by reviewing industrial newsletters and Plant B by reviewing transient assessment reports. Neither plant specifically mentioned using the LER or the NPRDS databases.

Each plant ranked three parameters, inspections, or tests which they found to be most important in ensuring operational readiness. Plant A listed rod drop time testing, bi-weekly exercising, and cabinet cleaning. Plant B relied on component failure trending, thermography of stator isolator fuses and gasket replacements.

8.2 Combustion Engineering Plants

Four CE utilities representing eight units responded to the questionnaire. The four respondents, designated as Plants C, D, E, and F have one, two, two, and three units, respectively. Generally, the utilities with multiple units did not distinguish between the plants when responding to the survey. Table 8.5 presents the CEDM system design details for each plant which responded to the survey.

Combustion Engineering plants use either the magnetic latch or the rack-and-pinion type CEDMs. All four respondents use the magnetic latch design. The operating time accumulated on these CEDMs range from three to eighteen years.

All the plants use single and dual CEAs for reactivity control. Typically, the dual CEAs have four control element rods per assembly and straddle two or four fuel assemblies, depending upon the core design. The single CEAs are dedicated to one fuel assembly. Plants C and D use similar control element rods consisting of a combination of B_4C poison with Ag-In-Cd in the rod tips. Plant F uses all B_4C rods; however, due to irradiation induced swelling, the diameter of the pellets in the lower portion of the rod are reduced and encased in felt metal. The felt metal contracts under irradiation, limiting the amount of clad strain and swelling. Plant E did not provide information on the design of their control elements.

With the exception of Plant C, the other three plants use part-length control elements. Plants D and F use a three-zone design consisting of B_4C in the top zone, a hollow, water-filled center zone, and a solid Inconel tip.

Each plant uses different methods to attach the individual fingers to the spider. Plant C typically uses dowel pins and welding; however, two of the corner rods screw into the spider. Plant D uses collet-connected hubs, and Plant F uses threaded and lock nut connections. The actual method used to connect the rods to the spider does not affect system aging. However, the use of a nut permits individual rod replacement in the event of rod failure.

Plant C reported irradiation-induced swelling of the B_4C pellets in the tips of the control rods. This swelling was measured by eddy current and has also caused wear near the tips due to flow-induced vibration against the upper guide structure. Plant E also reported similar guide tube wear.

No unusual wear or indications of crud buildup on either the drive shaft or latches was reported. Three plants reported damaged extension shafts, which occurred during refueling operations. Unlike the B&W design, the drive shafts for the CEDM remain connected to the CEAs during reactor vessel head removal. When completed, the drive shaft extensions are then disconnected from the CEAs and locked in place for removal with the vessel's upper guide structure, which is stored underwater. Upon completion of refueling, the upper guide structure is replaced and the drive shaft extensions are reconnected to the CEAs. The head is partially lowered until the drive shaft extensions are engaged by the CEDMs, and then lowered until sealed. At this step, the extension shafts may be damaged, because the operators must ensure that the drive shafts are properly positioned within the CEDMs before continuing to lower the head.

The refueling procedure is significantly modified for the System 80 plants. The head removal process is the same; however, instead of disconnecting the extension shafts from the CEAs, both are withdrawn into a lift rig, and latched to the work platform. After the upper guide structure is removed

Table 8.5 Combustion Engineering System and Component Description

	Plant C	Plant D	Plant E	Plant F
What CEDM is used at your plant?	Magnetic Jack	Magnetic Jack	Magnetic Jack System 80	Magnetic Jack System 80
Number of CEDMs in the plant.	61	91	65	89
Operating time accumulated on CEDMs.	18 years	approx. 7-8 years	12 years (Unit 1) 10 years (Unit 2)	3 units with a total of 12 years
Full Length CEA (FLCEA) Description	80 FLCEAs, Poison unit Ag-In-Cd Tip	83 assemblies Poison with Ag-In-Cd Tips	57 per unit; 20 dual CEA and 37 single CEA	75 FLCEAs B_4C poison with felt metal and reduced dia. B_4C in lower rod
Part Length CEA (PLCEA) Description	No PLCEAs	8 PLCEAs, B_4C Top, hollow water filled middle, and solid Inconel laser portion	8 per unit	13, Inconel on top of B_4C in lower rod portion
CEA Rod to Spider Connection Method	79 are dowel pinned and welded, 2 have corner rods that screw into spider	Collect connected hub	--	Threaded and lock nut in place
Reactor Head Ambient Air Temperature	Not Measured	120°F	approx. 150°F (est)	110°F
CEDM to RV Seal	Omega	Omega	Omega	Omega

and stored, the extension shafts are uncoupled from the CEAs. The lift rig and the extension shafts are then moved to a separate storage area, which allows the CEAs to be removed or shuffled within the upper guide structure using special tools and the CEA change platform. Upon completion, the upper guide structure is re-inserted, the drive shaft extensions and CEAs recoupled and lowered into position, and the reactor head replaced.

None of the four plants reported major problems with motor tube welds. Plant E had to cut two welds to install additional reactor monitoring instrumentation. Plant F had to cut one motor tube to determine the cause for one CEDM which could not be fully inserted during rod-drop testing. The cause of the problem was a dislodged ball bearing which fell from the multi-stud tensioner, and became wedged between the control element and the guide tube.

Three of the plants (C, D, and F) reported instances of vent valve leakage. The vent valve is located on the top of the motor tube and is used to vent the reactor following refueling. Seal welding was the primary fix for the leaks at Plant C, while the remaining leaks were repaired by replacing the balls and the o-rings. Plants D and F also reported vent valve leakage which required seal welding.

All four plants have either replaced some or all of their original coil stacks. Plants C and D replaced the upper and lower gripper coils. Plants D and E retrofitted their CED system with heavier duty, System-80 coils.

Plant F reported a multiple CEA drop which was caused by damaged insulation on the coil leads due to a fabrication deficiency. In addition to lower lift coil motion during CEA movement, this problem resulted in an intermittent ground which introduced noise into the CEDMCS circuitry; interfering with the holding voltage for another CEA, causing it to slip also. A program was initiated to inspect all of the insulation, replace any defective coils, and to sleeve all of the coil leads. Additional investigations concluded that the lower lift coil motion could be minimized by coupling the lower latch coil. This design is being revised at the plant to reverse the coil polarity on each of the CEDMs.

The cables and connectors at all four plants have not required any major repairs. Plant C reported cleaning connector plugs to improve resistance readings and reed switch connections. Plant E reported isolated, loose pin connections on some connectors, and isolated cable insulation damage.

Each plant reported failures with the rod position indication system, particularly with the reed switch position transmitters. Plant F reported that one of the RSPTs lagged the other RSPT during insertion and withdrawal. The problem was corrected by re-tightening the input terminations for the RSPTs. Plant E also reported that some cable jackets were cut by the metal identification tags.

There was not a particularly high incidence of power-supply failures. Plant D reported only minor failures, but Plant F reported several power-supply failures over the last three months, prompting the utility to evaluate and develop a replacement cycle.

Similarly, all plants reported minor operational difficulties with the CED control system, due primarily to the modular construction of a majority of the components. Plant D reported regular optical isolator failures (ten to fifteen per year). Similarly, Plant F reported approximately 45 failures in the three units. Examples of these failed components include CEA timers,phase synchronous cards, optical isolators, coil driver cards, and CEA enable and sequencer cards. Plant E reported failures mostly in the cabinet mounted 15 and 28v dc power supplies, and individual and group program module failures.

Each responding plant has made system improvements to the CED system (Table 8.6). Two plants have retrofitted their original CEDM system with System-80 coils.

In an effort to extend coil life, Plant D reduced the holding voltage from 35v to 25v. Plant F undertook a program to sleeve all CEDM coil leads, and to reverse coil polarity to minimize the motion of the lower lift coils.

Combustion Engineering plants use forced air for CEDM cooling. The operating experience for the system has been good. Plant C reported one instance of loss of cooling, but due to system redundancy, no degradation occurred. All plants monitor the inlet air temperature, and an alarm is annunciated in the control room if the setpoint is exceeded. Plant C maintains the temperature between 90 and 120°F, with an alarm setpoint at 130°F. Plant F has installed dampers to prevent backflow through the standby fans, ensuring maximum flow to the CEDMs.

Plants C and E reported changes to the rod position indication system. Plant C modified the RPI system so that all signals are multiplexed into a microprocessor which displays position information for all rod groups, individual rods in a group, the group mean, and rod height deviation. Plant E modified the output of the reed switches to provide more precise rod position information. The output was changed from 1-5V dc at 2-inch increments to 5-10V dc for 1.5-inch increments.

The CED control system has been modified at each plant. Plants C and E installed redundant 12 v power supplies for the coil power programmers. Plant C also installed a hold bus which permits the coil power programmers to be bypassed during maintenance. Plant D installed automatic timer modules, replacing the original timer cards. Plant F, in response to the multiple dropped CEA event discussed above, updated the ground fault detectors in the CEDM M-G Control System. A new under voltage (UV) detection system was also added, replacing the old system which was not adjustable and susceptible to drifting with age.

8.2.1 Preventive Maintenance and Inspection Practices

Table 8.7 summaries the Combustion Engineering recommended CEDM maintenance. Specific recommendations are provided for the gripper coils, vent valves, and the drive shafts.

Following each refueling, coil traces are obtained for each individual CEDM. These traces, verify the proper actuation of the coils, and the current level applied to the coils (Figure 8.2). CE recommends that these traces be visually compared to the traces obtained from the previous cycle for each CEDM. Any changes should be evaluated and dispositioned by CE. Coil resistance is also obtained to ensure that there are no electrical shorts. A visual inspection is also performed if any indication of boric acid leakage is found.

The o-rings and the stainless steel ball are also replaced each time the vent valve is opened to ensure that no worn or damaged parts are re-installed, resulting in primary coolant leakage. A visual inspection is also made on the drive shafts, during refueling, following the removal of the reactor vessel head and upper internals. Although this inspection is performed from above the components, CE states that any significant area of wear would be visible.

Table 8.6 CED System Design Changes and Modifications

	Plant C	Plant D	Plant E	Plant F
Coil Stack Assembly	No Change	Reduced holding voltage from 35 v to 25 v, Retrofitted System 80 Coils	Retrofitted System 80 Coils	Coil polarity reversed to minimize lower lift coil motion. Sleeved all CEDM coil leads.
CEDM Cooling System	No Change	No Change	No Change	Dampers installed on top of fan stack to prevent backflow through standby fan.
Cable and Connectors	No Change	No Change	Threads modified on connectors from five thread to ACME	--
Rod Position Indication System	RPI multiplexed into microprocessor which displays PC for all rod groups, ind. rods, and ind. rods in a group about mean. System also identifies rod height direction	No Change	Reed switch output changed from 1-5 vdc step outputs at 2 in. inc. to 5-10 vdc at 1.5 in increments	No Change
CEDM Control System	Redundant power supply and monitoring system installed for each coil power programmer. Hold bus installed to bypass CPP during maintenance activities.	ACTM replaced original timer cards	Changed no. of CEAs between Groups 4 & 5, therefore had to reverse logic for autometer and sequ. group control. Installed dual 12 v power supplies for coil power programmer.	New undervoltage detector system installed. Ground fault detector improvement installed in CEDM M-G control system

Table 8.7 CE Recommended Annual CEDM Preventive Maintenance

I. Gripper Coils
   a) Coil Operating Traces
   b) Coil Resistance
   c) Visual Inspection (if the CEDM Cooling System is degraded)

II. Vent Valve
   a) Replace O-Rings
   b) Replace Stainless Steel Sealing Ball

III. Drive Shafts
   a) Visual Inspection (when upper reactor internals are removed)

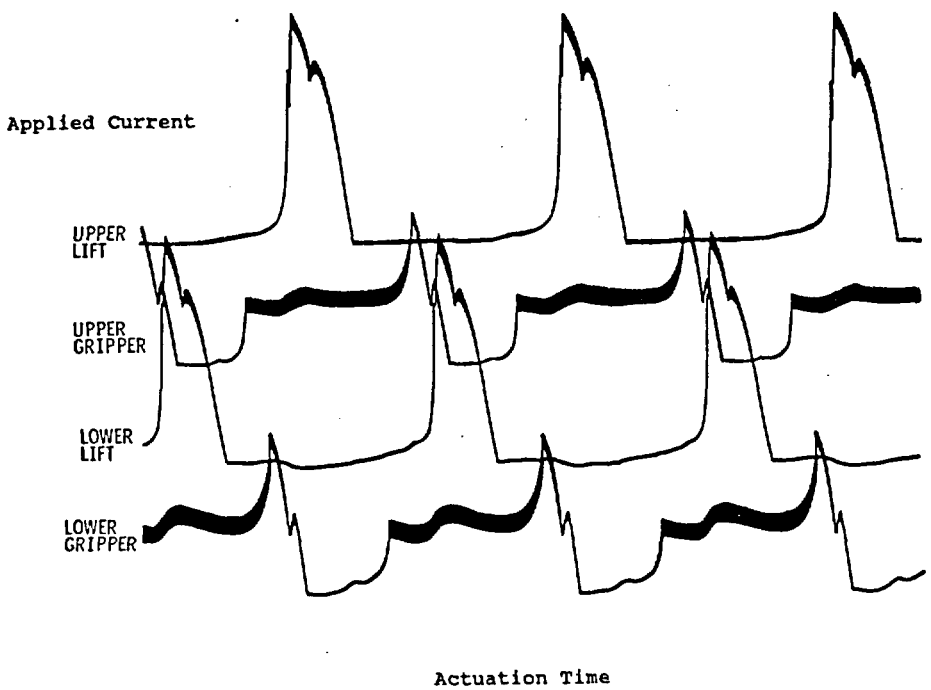

Figure 8.2 -- CE Coil Current Trace

Table 8.8 summarizes the preventive maintenance and inspection practices for the CED system used at each plant. Plant B reported eddy current inspections of the control element rods following every third cycle. This is normally not performed, but was instituted to monitor wear on the CEA rod tip due to flow-induced vibration against the guide tubes in the upper guide structures, as well as cladding strain induced by B_4C swelling. As discussed in Section 6.0, Maine Yankee experienced a failed CEA center finger end cap, which allowed the B_4C pellets to spill into the guide tube, preventing the CEA from fully inserting. Subsequent inspections revealed two additional fingers had missing end caps, and six others with cracks. CE uses several different rod designs; plants with the old design, which did not account for the degree of B_4C swelling, may be susceptible to similar type of failures. None of the other three plants reported similar inspections; however, Plant E reported inspecting the guide tubes during each refueling; but few details were provided about this inspection.

No inspections are performed on the CED latches, and only Plants C and D made cursory visual inspections on the CED drive shafts during refuelling. A detailed inspection is difficult to make since the lower portions of the drive shafts are moved with the upper internals. Therefore, only gross defects would be visible during an inspection.

Each plant inspects pressure housing welds as required by the ASME Boiler and Pressure Vessel Code, Section XI. Weld integrity is inspected by ultrasonic and dye-penetrant techniques. These inspections are required every ten years on 10% of the periphery assemblies. Hydrostatic integrity is also inspected at each refuelling and during the ten year inspection. The Omega seal used to seal the flange to the vessel head is also subjected to a remote visual inspection. The CEDM is only removed if there are indications of primary coolant leakage. There are no programs at the plants which track and trend seal degradation.

The vent valve, located on the top of the CEDM assembly, is used to vent the non-condensible gases following refueling or coolant level decrease. Plant C visually checks the integrity of this sub-assembly after each opening, while Plant D includes this inspection in their ten year inspection program. Plants E and F provided no specific details for their program.

The majority of inspections performed on the CEDMs are electrical. Only Plant E physically inspects the coil stack by performing a visual inspection for any discoloration caused by overheating.

Electrical inspections and testing consist of a 500v megger to test the coils' insulation and a resistance check on the coils to ground. Typically, these checks are made from termination points in the CEDM control cabinets outside the containment. The cables and connectors are also meggered to check the insulation. The connector and connector seals are inspected at the same time. Plants C and D visually inspect the cables and connectors. None of the plants directly monitor the coil stack temperature. However, by measuring the coils' resistance, a conversion to temperature is obtainable, but these calculations are not normally performed.

The preventive maintenance program at each plant includes the CEDM cooling system. Plant C annually sounds the foundation bolts, and inspects and repairs as necessary the fan blades, duct work and housing. Plant F cleans and inspects the cooling coils, visually inspects all of the fans, and lubricates the fans' motor bearings.

The rod position indication system consists of the pulse-counting and reed switch position indication systems. None of the four plants reported any physical inspections; however, all performed electrical tests. Plant C tests the functioning of the rod drop, lower limit, and zero position switches.

Table 8.8 Summary of CE Plants Preventive Maintenance and Inspection Practices

	Plant C	Plant D	Plant E	Plant F
Control Elements, Guide Tubes, CEA Shrouds	Eddy Current Insp. on CEA rods every 3rd cycle. Visual inspection of CEA shrouds and upper guide structure.	Not normally inspected	Guide tubes inspected each refueling	No Inspection
CED Latches	Not Inspected	Not Inspected	Not Inspected	Not Inspected
CED Drive Shaft	Cursory visual inspection during refueling	Cursory visual inspection	Not Inspected	Not Inspected
CED Pressure Housing Seal Welds	Not Inspected	Yes as per ASME Section XI requirements using both ultrasonic and dye penetrant.	No Response	Yes, every time a weld is made LP exam
Hydrostatic	Yes, following refueling and 10 year inspection	Yes, 10 year intervals	No, welds are inspected at system pressure	Yes, visually every time a weld is made
Seal Inspection	Not Inspected	Yes, as per Section XI requirements	No	Yes, remote visual exam for boric acid leakage
Vent Valve	Hydrostatic following every refueling	Yes, every 10 years	No answer	No
Coil Stack Assembly Physical Inspection	No	No	Yes, when installed	No
Electrical Inspection	Coil resistance and coil-to-ground resistance is measured for each coil using 500 v megger	500 v megger and resistance coils on each coil every refueling	VOM resistance test	No Response
CED Cooling System	Cooling fans are included in annual PM	General inspection each refuel, lube and filter	Inspection are part of STP's	Cooling coils inspection and cleaned. CEDM fan motors lubed
Cables and Connectors Inspection for Insulation Degradation or Wear	Yes, visually	Yes, 500 v megger	Yes, visual and meggering	No
Connector Pin Condition	Yes, during coil stock resistance test	No	Yes, each refueling	No

Table 8.8 Summary of CE Plants Preventive Maintenance and Inspection Practices (Cont'd)

	Plant C	Plant D	Plant E	Plant F
Connector Watertight Seal Inspection	Yes, during coil stick resistance testing	No	No	No
Rod Position Indication System Physical Inspection	No	No	No	No
Electrical Tests	Yes, voltage traces are taken for coil sticks. Lower limit and zero position switches are exercised. CEAs are cold functional tested and exercised monthly.	No	Yes, following each refuel, RSPT traces and pulse counting indicators are tested	Yes, RSPT are functionally tested. CEA position isolation amplifier is also calibrated every 18 months. Also, the RSPT's and CEA pulse counting post ind. is verified within 5-2 inches.
Cables, Connectors, and Termination Outside Containment	No Inspection	No Inspection	After each refuel visual and resistance readiness tests	No specific tests are written, however, termination are inspected during 18 month breaker PM
Power Supplies	Functionally tested each refuel	Logic power supplies recalibrated each refuel	Power supply recalibration each refuel	Power supplies are inspected, tested, and recalibrated every 18 months. CEDMCS UV relays are tested every refuel. CEA position amplifier are calibrated every 18 months. Viscorder traces of the CEA coil voltage are taken to verify proper operation of CED system.

Plant E tests the individual rods which trace both position indication systems. Similarly, Plant F functionally tests the RSPTs, and calibrates the CEA position isolation amplifier. Both systems are verified to be accurate within 5.2 inches of each other.

Each plant performs preventive maintenance on the CED system power supplies, by testing, inspecting, and re-calibrating the power supplies during refueling outages. Each plant monitors the functioning of the power supplies during operation, and provides an alarm in the control room upon low voltage. Plant C also noted that a replacement program is in place, each refueling outage, to improve the reliability of the power supplies.

Similarly, the plants all have a program to maintain the logic and control cabinets. Each plant cleans the cabinets and monitors the operability of the system during the functional and surveillance CEA testing. Plants C and D monitor the temperature of the cabinets, and provide high-temperature alarms in the control room. The average cabinet operating temperature varies between 70-80°F, with 100°F being the alarm setpoint.

8.2.2 CED System Tests

As required by plant Technical Specifications, each plant performs functional and surveillance tests throughout the cycle to ensure the operability of the CEA system. All of the plants perform the required position verification test. All plants compare the responses of the reed switch and pulse counting position indication systems. Plants D and F perform this test every shift, while Plant C performs it monthly.

Following refueling, each plant is also required to perform rod-drop time tests to ensure that the CEDMs are operable and can insert in less than 3 seconds. Each plant monitors the CEA breakers and the RSPTs to ensure compliance.

During a typical reactor operating cycle, the CEAs do not move often and therefore, stay in the same approximate location in the upper internals. Due to the coolant crossflow effects in this region of the core, vibration between the control elements and the guide tube may cause fretting and subsequent wear, particularly when the rods are stationary. To alleviate this potential problem, Plants C, D, and F perform a CEA exercising program monthly. Plant C specifies that the CEAs move a minimum of eight steps, Plant D moves the rod three steps in alternate directions, and Plant F moves each rod four inches. Plant E did not discuss their specific program.

8.2.3 General

Plant F is the only plant which reported a reliability and trend analysis program for the CEDMs. The NPRDS database was used to monitor component failures at other plants.

Finally, each respondent listed the three most critical tests, parameters, or inspections that assure operational readiness. Plant C listed monthly CEA exercising, refueling drop time checks, and position information and coil resistance readings. Plant D responded with drop tests, monthly exercising, and refueling calibrations. Plant E chose connector-to-cable resistance, venting, and rod testing. Plant F considered monthly CEA exercising, coil voltage adjustments, and rod drop time testing the most important.

8.3 Summary of Survey Results - (B&W and CE)

The responses to the questionnaire provided valuable information on the operating history and maintenance programs required for the control rod drive mechanisms. The preventive maintenance programs at the plants demonstrates that the system requires both maintenance and surveillance to ensure it is operational, and that the system will allow gravity insertion of the control rods upon removal of the holding power by opening reactor trip switchgear.

8.3.1 Cable Integrity

The use of meggering to check the electrical integrity of both cables and components is very common in the nuclear industry. This test is primarily a go/no-go type of test which cannot detect insulation degradation over time.[41] Failure of meggering may not always indicate component degradation, since the test is sensitive to environmental conditions, such as humidity. Since the area inside containment tends to be humid, a utility may energize a cable or component for a period in an attempt to dry it, and then retest, before replacing the component.

A potential alternative to meggering is to use an on-line monitoring system. The Electronic Characterization and Diagnostics (ECAD) System,[42] developed by ECAD Services, is an example of a commercial system. ECAD has been used at San Onofre to demonstrate the integrity and operability of various electrical circuits by measuring standard electrical characteristics. From this data, ECAD verified the operational condition of a circuit, located failed areas, and established reference baseline data for subsequent retesting to determine cable degradation. Such a system, when used to monitor the CRD's, could detect and highlight general problem areas which may be indicative of aging, and permit corrective maintenance to be performed before a failure occurs. A similar on-line data analyzing system has been developed by Mitsubishi, and has been used at several Japanese plants.

8.3.2 CRDM Operation

Large scale CRD failures which prevented control rod insertion have not occurred. However, no current inspection program monitors the condition of the CRD internals, which could indicate age degradation. Motor current signature analysis (MCSA)[43] is a non-intrusive, non-destructive, advanced monitoring method which could provide this information. Originally developed for motor-operated valves, MCSA senses variations in the electrical current supplied to a device. When analyzed either in the time or frequency domains, and trended over time, these variations provide accurate indications of age-related degradation. Examples include bearing wear, motor RPM, and roller nut/leadscrew meshing. Such information would be essential in determining the amount of aging degradation and allow for replacement before any major failure which could affect both the functioning of the drive and plant safety.

8.3.3 Primary Coolant Leakage

Primary coolant leakage and its deleterious effects, have been the subject of several operating experience reports, including a NRC Information Notice. The Babcock & Wilcox units which responded to the survey are retrofitting the originally installed spiral wound asbestos/stainless steal gasket with a graphite-filled one. Both units have replaced some of the gaskets, and have stated that the remainder will be replaced on an "as needed" basis when leakage is observed. Typically, no inspection is performed on these gaskets since the CRD mechanisms are not normally removed. Due to the importance of these gaskets, the remaining old ones should be replaced as soon as practical, even if no leakage is observed.

An on-going periodic inspection program should be instituted to monitor the integrity of the replacement gaskets to allow the development of a life time estimate. With this data, gaskets could be replaced on a scheduled basis, and not upon failure.

Babcock & Wilcox's redesign of the ball type vent valve has simplified the venting process, and decreased coolant leakage and personnel exposure. Plants still using the original vent valve should evaluate the redesign for use at their facility. All of the vent valves could be replaced, or in lieu of repairs, individual valves could be replaced when they leak.

The results of the survey have shown the need for sound maintenance practices and procedures is not alleviated by component redesign and simplification. This point was highlighted at the plant which experienced lack of stator cooling resulting from a failure to connect the cooling lines after refueling. This event occurred even though the plant modified the cooling system and simplified the process by installing quick disconnect couplings.

None of the Combustion Engineering respondents alluded to any type of inspection program for the Omega seals, other than checking for boric acid leakage. A scheduled, periodic inspection program for these seals is needed that would allow the seals' condition to be monitored over time, and would identify deterioration so that seals of a similar age could be repaired before failure.

8.3.4 In-Service Inspection

Each plant inspects the integrity of the welds on the CRD housing every ten years as required by the ASME Boiler and Pressure Vessel Code, Section XI. However, this is a partial inspection, covering only 10% of the periphery housings. The other mechanisms also should be subjected to the same type of inspection. Present inspection methods do not easily lend itself to this type of inspection. The area on the top of the reactor head is cramped, and the mechanisms do not have much space between them. A gasket inspection program, as discussed above, would also allow the welds on the housing to be inspected. From this data, lifetime estimates could be developed which would allow decisions to be made about which other mechanisms may have to be removed for inspection.

8.3.5 CRD Control System

Excessively high temperatures have been identified as the root cause of failure of several CRD control modules. Failures in these complex systems may directly affect plant availability. Repairs are difficult, because there is no well-defined diagnostic method. Only two of the responding CE plants monitor cabinet ambient temperature during operation. In the event of a slipped or dropped rod, an adequate shutdown margin must be demonstrated to continue full power operation. An on-line monitoring system, capable of assessing the operational status of the system and diagnosing malfunctions, would be of great assistance. Such a system could range from simple temperature and power monitors to a state-of-the-art expert system. CE is currently modifying the ACTM at one plant to provide historical data on ACTM and CEDM occurrences which could be used for preventive maintenance purposes also.

Similarly, overheating of the stator coils has been identified as the cause of system failures. Both of the B&W plants directly monitor stator temperature with thermocouples. The CE plants without ACTMs, rely on an indirect determination using the resistance of the coils to calculate temperature. A direct measuring system is more advantageous. An alarm can be provided in the control room which alerts the operator to high temperatures, allowing action to be taken, or power to that coil reduced while

the problem is investigated. Temperature data is also important in determining aging changes in the coils, and could be used to determine the life of the coils. The ACTM upgrade provides for coil current monitoring via non-intrusive current sensors. Excessive coil currents are indicative of coil heating and aging effects.

The complexity of the control system lends itself to the use of an on-line expert system, which would be valuable for operational monitoring and troubleshooting. The expert system would evaluate fault signals and determine the exact location of the system failure. An expert system uses two reasoning mechanisms,system design and operation knowledge, to accomplish this. Thus, by evaluating the cause-and-effect relationships learned, the expert system produces a diagnosis graph for normal operation. System malfunctions are represented by deviations from this graph. The exact cause of the failure may be identified to the smallest system component, depending upon the complexity of the system's design.

A monitoring system, supplemented with a preventive maintenance program, could increase the reliability of the system. Infrared thermography scans are an example of a simple inspection, which when performed on regularly, can provide valuable information on the condition of the equipment. Scans of electrical modules, connectors,and cables for signs of overheating would allow corrective maintenance to be performed before they fail. Commercial equipment permits recording of the field scans for comparison to an original baseline scan. This would allow an evaluation of the characteristics of the component as a function of aging. From this, component life may be determined, supporting a scheduled replacement of major modules before failure. Software is also available to convert the video output to a digital format, so the information can be analyzed and processed on a PC.

8.3.6 Reliability Data Bases

A important component of any maintenance program is a reliability data base. Such a database should include component information both from plant specific and industry-wide data. One of the CE respondents, and both of the B&W plants, reported having such a program in place. Commercial databases, such as the NPRDS maintained by INPO, provide detailed data on component operation and failure, including age at failure. The use of such a program would assist a single utility to obtain this data quickly from other similar plants. The plant then could evaluate occurrences at other plants, and take appropriate action before similar failures at their plant.

9. CONCLUSIONS AND RECOMMENDATIONS

The control rod drive systems for Combustion Engineering and Babcock & Wilcox provide reactor control functions by positioning the control rod assemblies in response to manual and automatic control signals. The control rod drive control systems control the short term reactivity effects during normal operation, and allow a rapid reactor shutdown through the gravity insertion of the control rods upon removal of CRDM power via opening of the reactor trip switch gear, which is part of the reactor/plant protection system.

A Phase I aging evaluation has been completed for both system designs. The major components of each system, and the primary operating and environmental stresses which cause age degradation and failure, were discussed. A Failure Mode and Effect Analysis (FMEA) for each major sub-system was also completed. The CE and B&W CRD systems have been the subject of several NRC and EPRI studies. These studies and the four NRC Information Notices documenting system degradation and failure were reviewed, and the results summarized.

The review of the 1980-1990 operating experience indicates that each system has experienced age related failures and degradations, resulting in significant plant effects, including dropped rods, power reductions, and plant scrams. The systems are also susceptible to human errors and inadequate maintenance. The control rod drive system has never failed to shut the reactor down upon demand. System failures have resulted in increased component stresses, and in thermal and pressure cycles, which challenge the operation of the other plant safety systems.

A survey of utilities was conducted to obtain additional CRD operating experience, and information on their maintenance, surveillance and inspection activities that mitigate aging. Meetings were also held with CE and B&W to determine recommended maintenance, inspection, surveillance, and operating restrictions.

9.1 Conclusions

9.1.1 Combustion Engineering

The CE Control Element Drive System is being used in fifteen plants. Thirteen of the plants use the magnetic latch CEDM, while Palisades and Fort Calhoun use the rack-and-pinion design. Based upon the review of the operating data bases, the following conclusions were reached.

1) Degradation and failures of the CE control rod drive control system accounted for the majority of system failure occurrences. The primary result of control system degradation was dropped or slipped rods due to the improper or sluggish gripper operation. In response to these, CE has upgraded the control system in five units to incorporate microprocessors and current sensors which monitor the mechanical actuation of the drive mechanism in order to control the voltage/current sequencing during rod movement. The upgrades also monitor for abnormally high or low currents, and take corrective action. All CE units also have redundant logic power supplies.

2) The majority of primary coolant leakage occurrences resulted from the failure of the rack-and-pinion rotating seals. Only the two oldest CE plants (Palisades and Fort Calhoun) use this type of CEDM. (Section 6.4.3.1)

3) Failures of the reed switches and Reed Switch Position Transmitter (RSPT) typically resulted in loss of position indication. These failures also represented a loss of redundancy, since two (and in some plants three) independent rod position indication signals are required by Technical Specifications. (Section 6.4.4)

4) The CED System was susceptible to degradation and failures caused by human error. Inadequate and improperly performed maintenance procedures resulted in leadscrew and gripper coil failures. When these failures occur, utility management review the importance of proper system maintenance, and also highlight potential plant effects, with the operating staffs. (Section 6.4.5)

5) The CED system was susceptible to environmental degradation. Several occurrences of electronic component overheating caused by the loss of forced air cooling of the electrical cabinets were reported. Plants should consider installing a monitoring system which would alert the operators to system degradation and initiate maintenance before system failure. (Section 6.4.5)

6) A significant number of LERs documenting system degradation and failure had unknown causes. This was representative of inadequate analysis of root cause of failure. Instances of repeat failures were noted before the problem cause was determined and corrected. This placed unnecessary stress upon the CRD system and components. (Section 6.4.6)

9.1.2 Babcock & Wilcox

The review of the B&W CRD operating experience with the B&W Control Rod Drive system also demonstrated susceptibility to age related degradation and failures. From this study, the following conclusions were reached.

1) Numerous incidents of primary coolant leakage occurred as a result of age degradation and failure of the CRDM flange spiral wound, asbestos filled gaskets. B&W has redesigned the gasket to eliminate future leakage. (Section 6.4.3.1)

2) The early two-channel B&W rod position indication system became inoperable upon a reed switch failure. The new redundant four-channel design remains operational with several failed reed switches. The reed switch was also redesigned after numerous instances of spurious operation. These changes have improved the reliability of the subsystem. (Section 6.4.4)

3) Failure of the gate drives, which actuate the SCRs, accounted for the majority of control system failures. Aging of the diodes was the primary failure cause. (Section 6.4.2)

4) Failure of the CRDM vent valve assembly also accounted for primary coolant leaks. The hydraulic seal and quick vent redesigns have decreased the failure occurrences. (Section 6.4.3.1)

5) Several incidents of loose parts in the core have been reported. Though not age related, continued operation with loose parts should be avoided due to the potential that they may become lodged either in the CRDM internals or guide tubes, which could prevent the full insertion of the CRA. (Section 6.4.7)

6) The B&W CRDM internals currently are licensed for a 20-year lifetime, and several plants are close to this limit. This limit is based upon several conservative estimates, including 126,000 feet of leadscrew travel, 500 trips, and exclusive use with regulating rods. Plant data indicates that a typical CRDM leadscrew has travelled only a fraction of the allowable limit, the total number of plant scrams is considerably less, and the CRDMs are used interchangeably between regulating and safety rods. B&W is planning to remove several CRDMs with approx. 15 years of service from Oconee and Crystal River and to measure component wear. These results should be evaluated before considering any increase in life. (Section 3.3)

9.2 Recommendations

Based upon the results of this Phase I aging study, and the results obtained from the survey of operating utilities, the following general and design-specific recommendations are made. The general ones are applicable to both CE and B&W plants, while the specific ones are applicable to either CE or B&W plants.

These recommendations are intended to highlight the critical areas which have been susceptible to aging degradation and failure. If the recommendations are implemented, utilities will be able to detect and mitigate age related degradation more effectively.

9.2.1 General Recommendations

1) Plants should continue to access one or more of the operating data bases to gain information on CRDM system performance and failures experienced by other utilities. Often, similar failures are experienced at other plants, and knowing the failure cause and corrective action taken may be useful for other plants. Relying solely upon vendor-supplied information may not provide sufficient information, in time, to preclude similar failures from re-occurring.

2) Emphasis should continue to be placed upon detecting the root cause of failures. Numerous instances of similar failures, at the same and different plants, were reported with unknown failure cause. A thorough, initial analysis of root cause failure would decrease the potential of repeated failures.

3) The lifetime of both the B&W and CE control rod drive mechanisms is based upon conservative estimates for total number of steps and leadscrew travel. Utilities should monitor these parameters for each control rod drive to ensure that the limits are not exceeded. This action will also provide useful information if the control rod drive mechanisms are to be considered for use beyond their present specified lifetimes.

9.2.2 Combustion Engineering

1) Because the gripper coils are susceptible to overheating, the ambient temperature of the area above the reactor head should be monitored to provide an early indication of degraded cooling, and ensure that maintenance is performed before the coils fail.

2) Based upon operating experience, all CEDM flange seals should be inspected each refuelling for indications of boric acid leakage. Any indication of leakage should be located and repaired prior to return to power.

3) Installation of gripper coil thermocouples (instead of the indirect temperature methods currently used in some plants) would provide a direct, early indication of potential coil failure due to overheating. Alternatives such as the non-intrusive, coil current monitoring performed by the microprocessor based ACTM, would also provide the same benefit.

4) Because the electrical components contained in cabinets are susceptible to failures from overheating, the ambient temperature inside of the electrical cabinets could be monitored. An alarm should be annunciated if the temperature exceeds the design setpoint.

5) The thermal embrittlement of any cast stainless steel pressure housings should be monitored. Inspection of the cast pieces should be included in the ten year inspections performed by the plant.

9.2.3 Babcock & Wilcox

1) Because the high occurrences of spiral wound, asbestos filled gasket leakages, all the original designed gaskets should be considered for replacement. The replacement should be performed when primary coolant leakage is evident. The remaining CRDM flexitallic gaskets should be changed on scheduled basis over several outages to minimize plant schedule impact. In addition, the replacement gasket performance should be monitored to ensure that there are no age related degradation mechanisms uniquely associated with the new material.

2) Vent valve inspection should be performed at each outage. The valves should be replaced if primary coolant leakage is evident. The use of new designs does not preclude the need for proper component maintenance.

3) Electrical cabinet PM should continue, particularly cleaning the electronic components and the filters. Numerous instances of dropped or slipped CRAs due to thermal overheating were reported.

4) The o-rings which seal the stator coils around the motor housing should be replaced each time the stator coils are removed. Deteriorated o-rings may allow moisture to intrude on the coils, causing electrical shorts.

5) Plant operators should remain cognizant of the potential that loose parts may play in causing inoperable CRDMs. Control rod handling tools should be inspected before and after use to ensure no broken parts.

9.2.4 Advanced Monitoring Techniques

Both CE and B&W plants should evaluate the use of commercial advanced monitoring techniques. The results of this Phase I study indicated that most control rod drive maintenance is

performed in response to failures, rather than being preventive. These techniques can provide early indications of aging degradation, trendable for the life of the component. These techniques are non-invasive, which could decrease system failures and the resultant significant plant effects. Each application should be evaluated for its own cost benefit.

1) Motor current signature analysis may be considered to detect mechanical degradation including wear, bearing and seal failures. This is a non-invasive procedure which monitors the current supplied to the CRD. The results may be stored for trending. Several utilities have incorporated this technique with various degrees of success.

2) Infra-red thermography may be used to inspect for component overheating, particularly for cabinet mounted equipment.

3) Most plants commonly use meggering to check for electrical degradations. Meggering is not capable of detecting certain types of degradation. ECAD (Electronic Characterization and Diagnostics), or other, non-invasive techniques have been used at several plants to determine the electrical integrity of the CRD system. The results may allow for trending analysis to be performed.

10. REFERENCES

1. Vora, J.P., "Nuclear Plant Aging Research (NPAR) Program Plan," NUREG-1144, Rev. 2, June 1991.

2. Fullwood, R., et al., "Aging and Life Extension Assessment Program (ALEAP) Systems Level Plan," BNL Report A-3270-12-86, December 1986.

3. Gunther, W., and Sullivan, K., "Aging Assessment of the Westinghouse PWR Control Rod Drive System," NUREG/CR-5555, BNL-NUREG-52232, March 1991.

4. Final Safety Analysis Report, Maine Yankee, Docket No. 50-309, January 1984.

5. Final Safety Analysis Report, Arkansas Nuclear One, Unit 2, Docket No. 50-368, August 1992.

6. Final Safety Analysis Report, Waterford Steam Electric Station, Docket No. 50-382, December 1991.

7. Dufrane, K.F., et al., "Wear Measurements of Nuclear Power Plant Components," EPRI-NP-3444, May 1984.

8. Final Safety Analysis Report, Fort Calhoun, Docket No. 50-285, November 1991.

9. Final Safety Analysis Report, Arkansas Unit 2, Docket No. 50-368, August 1992.

10. Final Safety Analysis Report, Arkansas Nuclear One, Unit One, Docket No. 50-313, August 1992.

11. Final Safety Analysis Report, Crystal River 3, Docket No. 50-302, January 1987.

12. Final Safety Analysis Report, Arkansas Unit One, Docket No. 50-313, August 1992.

13. Control Rod Drive Mechanism - Instruction Manual, Rancho Seco Nuclear Generating Station, Unit 1, July 1974.

14. Lewis, Harold W., "The Safety of Fission Reactors," Scientific American, March 1980, Vol. 242, Number 3.

15. Williams, J.T., et al., "Control Rod Drive Mechanism Test Program," B&W Report No. BAW-10029A, Rev. 3., August 1976.

16. Three Mile Island One Operations Plant Manual, Control Rod Drive System, March 1989.

17. Riggs, R., "Control Rod Guide Tube Wear in Operating Reactors," NUREG-0641, April 1980.

18. Bailey, W.J., et al., "Fuel Performance Annual Report for 1980," NUREG/CR-2410, December 1981.

19. Bailey, W.J., et al., "Fuel Performance Annual Report for 1982," NUREG/CR-3602, March 1984.

20. Bailey, W.J., et al., "Fuel Performance Annual Report for 1983 Through 1988," NUREG/CR-3950, Volumes 1-6, 1983-1988.

21. Shah, V.N., et al., "Residual Life Assessment of Major Light Water Reactor Components - Overview," NUREG/CR-4731, November 1989.

22. Weiss, A.J., et al., "Fifteenth Water Reactor Safety Information Meeting - Proceedings," NUREG/CP-0091, February 1988.

23. USNRC Standard Review Plan - Rev. 1, NUREG-0800, July 1981.

24. USNRC Standard Review Plan for the Review of License Renewal Applications for Nuclear Power Plants," Draft NUREG-1299, November 1990.

25. Dufrane, K.F., et al., "Wear Measurements of Nuclear Power Plant Components," EPRI NP-3444, May 1984.

26. Sipush, P., et al., "Lifetime of PWR Silver-Indium Cadmium Control Rods," EPRI NP-4512, March 1986.

27. Koppe, R.H., et al., "Characterization of the Performance of Major LWR Components," EPRI NP-5001, January 1987.

28. "PWR Pilot Plant Life Extension Study at Surry Unit 1: Phase 2," EPRI NP-6232-M, March 1989.

29. USNRC Maintenance Team Inspection Report 50-255/88-20 on 880919-23, 1011-14 and 1020 and Notice of Violation, January 10, 1989.

30. USNRC Maintenance Team Inspection Report 50-335/89-24 and 50-389/89-24 on 89 1002-06, 1016-20, 1030-1103 and 1129, January 10, 1990.

31. "Standard Technical Specifications - Babcock and Wilcox Plants," Draft NUREG-1430, January 1991.

32. "Standard Technical Specifications - Combustion Engineering Plants," Draft NUREG-1432, January 1991.

33. "Guide to the Collection and Presentation of Electrical, Electronic, Sensing Component, and Mechanical Equipment Reliability Data for Nuclear Power Generating Stations," IEEE Standard 500-84, 1983.

34. Fuqua, Norman B., Reliability Engineering for Electronic Design, New York: Marcel Dekker, Inc., 1987.

35. Montague, D.F., et al., "A Common Cause Failure Analysis of the Rodded Scram System of the Arkansas Nuclear One - Unit 1 Plant," ORNL/TM-10045, October 1986.

36. Payne, A.C., "Interim Reliability Evaluation Program: Analysis of the Calvert Cliffs Unit 1 Nuclear Power Plant," NUREG/CR-3511, May 1984.

37. Kolb, G.J., "Interim Reliability Evaluation Program: Analysis of the Arkansas Nuclear One - Unit 1 Nuclear Power Plant," NUREG/CR-2787, August 1982.

38. "Oconee PRA - A Probabilistic Risk Assessment of Oconee Unit 3," NSAC/60, June 1984.

39. Garcia, A.A., et al., "Crystal River 3 Safety Study," NUREG/CR-2515, March 1982.

40. Control Rod Drive Mechanism - Instruction Manual, Rancho Seco Nuclear Generating Station, Unit 1, July 1974.

41. Subudhi, M., et al., "Improving Motor Reliability in Nuclear Power Plants, Vol. 1: Performance Evaluation and Maintenance Practices," NUREG/CR-4939, November 1987.

42. Pentecost, L., et al., "Condition Monitoring Utilizing the ECAD Automated Test System at San Onofre Nuclear Generating Station," Presented at the 17th Inter-ram Conference for the Electric Power Industry, Hershey, PA, June 1990.

43. Kryter, R.C., et al., "Condition Monitoring of Machinery Using Motor Current Signature Analysis," Sound and Vibration, September 1989.

44. Meyer, L.C., "Nuclear Plant-Aging Research on Reactor Protection Systems," NUREG/CR-4740, January 1988.

Appendix A

Summary of Licensee Event Reports for Combustion Engineering
Control Element Drive System
1980 - 1990

Table A-1	Cable and Connector LERs
Table A-2	CED Control System LERs
Table A-2.1	Control Element Drive System (CEDS)
Table A-2.2	Control Element Drive Mechanism Control System (CEDMCS)
Table A-3	CEDM LERs
Table A-4	Rod Position Indication LERs
Table A-5	Human Error LERs
Table A-6	LERs with Unknown Causes
Table A-7	Miscellaneous LERs

Table A-1. Cable and Connector LERs

	Plant	LER No.	Age at Failure (years)	Failure Description
1	St. Lucie 1	335/80-005	4	Loose lead CPC 15v power supply caused CEA to drop twice.
2	St. Lucie 1	335/80-003	4	Cable problem between containment and refueling disconnect panel caused position indication to be lost twice.
3	St. Lucie 1	335/81-026	5	Cable problem between containment and refueling disconnect panel caused position indication to be lost.
4	Millstone 2	336/80-010	5	Erratic position indication caused by intermittent open circuit in cable or connector from reed switch.
5	Millstone 2	336/80-028	5	Faulty jumper cable between refuel disconnect panel and reed switch caused dropped CEA and power reduction.
6	San Onofre 2	361/83-124	1	Faulty connector in CEAC position circuit gave erroneous position indication twice.
7	Waterford 3	382/86-013	1	Loose cable connection caused fluctuating position indication signal and subsequent reactor trip.
8	Arkansas 2	368/81-010	3	CEAC inoperable due to a loose cable connection.
9	Arkansas 2	368/82-027	4	CEA had erroneous position signals due to faulty RSPT cable connection.
10	San Onofre 2	361/83-098	1	CEAC inopearable due to loose screw connection on position transmitter input.
11	Waterford 3	382/90-002	5	Two CEAs dropped into core during transfer to hold bus. Damaged connector between CEDM and CEDMCS. Reactor trip.
12	San Onofre 2	361/83-096	1	Dirty contacts on CEA timer card caused CEA to slip and power reduction.
13	Millstone 2	336/81-038	7	CEA could not be withdrawn due to loose connection between timer module and power switch.
14	Millstone 2	336/82-025	8	CEA could not be withdrawn due to loose connection between timer moduel and power switch.
15	Arkansas 2	368/81-031	4	CEA dropped on 2 separate occasions due to poor contact on coil driver card causing power loss and sluggish upper gripper movement.
16	San Onofre 2	361/83-090	1	Slipped CEA due to poor connection on CEDMCS power switch.

Table A-2.1 Control Element Drive System (CEDS)

	Plant	LER No.	Age at Failure (years)	Failure Description
1	Calvert Cliffs 1	317/82-045	12	CEA dropped due to erratic upper gripper latch action.
2	Calvert Cliffs 2	318/87-008	11	CEA dropped due to failure of upper gripper power switch module.
3	Calvert Cliffs 2	318/80-010	4	CEA dropped, power reduced due to faulty timer module.
4	St. Lucie 1	335/80-007	4	CEA dropped, power reduced due to failed timer module.
5	Millstone 2	336/80-013	6	CEA dropped due to failed timer module, power reduced.
6	Calvert Cliffs 2	318/82-026	6	CEA dropped twice. Timer and upper gripper power switch replaced. Reactor power reduced.
7	Calvert Cliffs 1	317/81-071	7	Control module failure caused continuous insert signal resulting in CEA misalignment. Power reduction.
8	Calvert Cliffs 1	317/82-045	8	Erratic upper gripper latch action, dropped CEA, power reduction. Increased HV power supply.
9	St. Lucie 1	335/80-002	4	Failed 15v power supply caused dropped CEA and power reduction. (Powermate SU-UNI-30A-BV)
10	St. Lucie 1	335/80-023	4	2 CEAs dropped. Same as above.
11	St. Lucie 1	335/80-032	4	CEA dropped twice, timer module and power supply replaced. Reactor power reduced.
12	St. Lucie 1	335/80-034	4	Failed 15v power supply.
13	St. Lucie 1	335/80-035	4	Failed 15v power supply.
14	St. Lucie 1	335/80-036	4	Failed 15v power supply.
15	St. Lucie 1	335/80-010	4	Failed 15v power supply.
16	St. Lucie 1	335/80-043	4	Failed 15v power supply.
17	St. Lucie 1	335/80-045	4	Failed 15v power supply.
18	St. Lucie 1	335/80-046	4	Failed 15v power supply. All power supplies replaced with original Powermate UNI-88.
19	St. Lucie 1	335/80-048	4	Failed 15v power supply. All power supplies replaced with original Powermate UNI-88.

Table A-2.1 Control Element Drive System (CEDS) (Cont'd)

	Plant	LER No.	Age at Failure (years)	Failure Description
20	St.Lucie 1	335/80-049	4	Failed 15v power supply. All power supplies replaced with original Powermate UNI-88.
21	St. Lucie 1	335/80-050	4	While changing power supplies, voltage spike led to 2 CEAs dropping. Reactor manually tripped.
22	St. Lucie 1	335/80-051	4	Fuse blew in alternate power supply line, CEA dropped.
23	St. Lucie 1	335/80-052	4	Dropped CEA. Actual cause unknown but probably due to either power supply failure, inadequate ventilation or power supply mounting.
24	St. Lucie 1	335/81-020	5	Dropped CEA, reduced power, replaced power supply.
25	Millstone 2	336/82-041	8	CEA dropped twice, power reduction, failed 15v dc power supply (Lambda Elec LCD-A-22).
26	Maine Yankee	309/84-001	12	Failed power supply caused dropped rod and reactor shutdown.
27	St. Lucie 1	335/82-056	6	CEA motion inhibit circuit for CEA out of sequence deviation scanner failed due to loose relay.
28	St. Lucie 1	335/82-055	6	CEA motion inhibit circuit for CEA out of sequence deviation scanner failed due to loose relay.
29	St. Lucie 1	335/81-030	5	CEA motion inhibit circuit for PDIL circuit failed due to failed relay.
30	Millstone 2	336/82-027	8	During CEA surveillance testing, CEA motion inhibit for all CEA groups became inoperable due to failed logic chip.
31	Millstone 2	336/82-030	8	CEA motion inhibit interlock did not function due to faulty operational amplifier.
32	Calvert Cliffs 1	317/81-066	7	While troubleshooting CEDMCS, a logic module which was inserted caused spurious signals which caused rod drop due to failed off switch on the control panel.
33	Calvert Cliffs 2	318/83-019	7	Circuit burn of newly installed circuit boards caused PDIL function to be inoperable.
34	Calvert Cliffs 2	318/83-027	7	Failure of PDIL auctioneering card output semi-conductor rendered CEA motion inhibit inoperable.
35	St. Lucie 1	835/90-008	14	Dropped rod on 4 occasions caused by power losses from fuse not locked in place in the 12v dc logic circuit. Reactor shutdown.

Table A-2.2 Control Element Drive Mechanism Control System (CEDMCS)

	Plant	LER No.	Age at Failure (years)	Failure Description
1	San Onofre 2	361/86-018	4	CEA slipped due to inherent design deficiency in software which control DC to CEA coils.
2	San Onofre 3	362/84-003	1	Sluggish gripper operation caused CEA to slip and subsequent reactor scram.
3	Waterford 3	382/86-001	1	Faulty timing module caused CEA drop and reactor trip.
4	San Onofre 2	361/85-031	3	Missing lug nut caused abnormal energization of power coils, causing CEA subgroup to drop and reactor trip.
5	San Onofre 2	361/83-114	1	Dropped CEAs due to defective coil driver actuation card.
6	San Onofre 2	361/83-054	1	CEA dropped during surveillance testing due to slow gripper operation.
7	Arkansas 2	368/82-004	4	CEA dropped due to sluggish upper gripper.
8	Arkansas 2	368/83-040	5	Dropped CEA due to blown fuse.
9	Arkansas 2	368/84-024	6	Dropped CEA due to failure of SCR, power supply fuses, opto-isolator cards or coil driver cards. Subsequent reactor scram.
10	San Onofre 3	362/85-020	2	Dropped CEA due to blown fuse in the hold bus logic circuit. Subsequent reactor trip.
11	Waterford 3	382/89-017	4	Unable to withdraw CEA due to control circuitry problems. Reactor trip.
12	St. Lucie 2	389/89-007	6	Breaker tripped at less than rated current resulting in dropped CEAs. Power decrease.
13	Palo Verde 3	530/90-004	3	Failure of microchip on optical isolator card resulted in CEA drop. Reactor shutdown.
14	Palo Verde 3	530/90-006	3	Failure of coil driver actuating logic card caused slipped CEA. Reactor shutdown.

Table A-3 CEDM

	Plant	LER No.	Age at Failure (years)	Failure Description
1	Palisades	255/81-049	10	Plant shutdown due to excessive coolant leakage past improperly installed CEDM seal housing gasket.
2	Palisades	255/84-024	13	Failed CEDM seal housing. Plant brought to cold shutdown.
3	Palisades	255/85-006	14	CEA inoperable due to failed motor brake drive package.
4	Palisades	255/86-040	15	14 CEDM seal housings showed cracks due to contaminant induced stress corrosion cracking.
5	Calvert Cliffs 2	318/80-040	4	Dropped CEA due to omission of CEA venting during primary system fill.
6	Calvert Cliffs 2	318/80-041	4	Dropped CEA due to omission of CEA venting during primary system fill. Reduced power.
7	Calvert Cliffs 2	318/80-048	4	2 dropped CEAs due to omission of CEA venting.
8	Calvert Cliffs 2	318/80-056	4	CEA dropped due to omission of CEA venting, power reduced.
9	Calvert Cliffs 2	318/80-057	4	CEA dropped due to omission of CEA venting during primary system fill.
10	Calvert Cliffs 2	318/81-054	5	CEA dropped due to omission of CEA venting during primary system fill. Reactor power reduced.
11	Millstone 2	336/88/008	14	Overheating of the upper gripper coils due to degradation of CEDM cooling system due to air flow blockage by boric acid, deposition caused 2 CEAs to drop. Plant shutdown.
12	Millstone 2	336/88-009	14	Dropped CEA and reactor shutdown due to overheating of upper gripper coil due to lack of cooling caused by boric acid deposition.
13	San Onofre 2	361/83-102	1	Malfunction of upper gripper coil stack caused dropped CEA.
14	Arkansas 2	368/84-026	6	Shorted upper gripper coil caused CEA to drop. Reactor trip.
15	Waterford 3	382/86-023	1	Failed lower gripper sensor caused dropped CEA and subsequent reactor trip.
16	St. Lucie 2	389/85-010	2	Failed upper gripper coil led to dropped CEA and reactor shutdown.
17	Palo Verde 1	528/88-020	3	Lower lift coil ground caused dropped CEA.

Table A-3. CEDM (Cont'd)

	Plant	LER No.	Age at Failure (years)	Failure Description
18	Palo Verde 1	528/88-026	3	Lower lift coil ground caused dropped CEA.
19	Palisades	255/80-020	9	Dirty control relay armature and holddown contactor interlock stuck resulting in slipped CEA.
20	San Onofre 2	361/90-019	7	Degraded CEDM electrical condition. Resulted in inadvertant ESF actuation and reactor trip.

Table A-4. Rod Position Indication

	Plant	LER No.	Age at Failure (years)	Failure Description
1	Palisades	255/80-031	9	During control rod interlock testing, group of control rods withdrew from core due to loss of primary and secondary data loggers.
2	Palisades	255/88-025	17	Oscillating power supply caused spurious alarms, which led operators not to recognize an out of sequence alarm as valid.
3	Calvert Cliffs 1	317/83-008	9	Failed RSPTs gave erratic position information on 2 CEAs (Electro Mechanics N9027-1).
4	Calvert Cliffs 1	317/83-026	9	Failed RSPT gave erratic rod position information (Electro Mechanics N9027-1).
5	Calvert Cliffs 1	317/83-036	9	Shorted RSPT overloaded power supply causing loss of all reed switch position indication. Power reduced.
6	Calvert Cliffs 2	318/82-019	6	Failed RSPT gave intermittent position indication.
7	Calvert Cliffs 2	318/82-022	6	Failed RSPT gave erroneous position indication.
8	Calvert Cliffs 2	318/83-065	7	2 failed RSPTs produced erroneous rod position information (Electro Mechanics N9027-1).
9	Calvert Cliffs 2	318/83-069	7	Lost all reed switch position information due to failed metroscope power supply.
10	Calvert Cliffs 2	318/83-075	7	Failed RSPT caused spurious CEA Motion Inhibit Alarms.
11	St. Lucie 1	335/80-022	4	Due to programming error, DDPS malfunctioned, causing loss of all backup CEA position indication.
12	St. Lucie 1	335/80-059	4	Due to software error, pulse counting CEA information lost when DDPS failed.
13	St. Lucie 1	335/81-007	5	DDPS system failure resulting in loss of CEA backup position indicating system.
14	St. Lucie 1	335/81-002	5	DDPS system failure resulting in loss of CEA backup position indicating system.
15	St. Lucie 1	335/82-049	6	Pulse counting function for a CEA was deleted by plant computer.
16	St. Lucie 1	835/82-044	6	Pulse counting function for 1 CEA was deleted by plant computer.
17	Millstone 2	336/80-008	6	Pulse counting position indication system inoperable due to faulty analog input driver card.
18	Millstone 2	336/81-009	7	Circuit card failure in plant computer caused pulse counting indication system to be inoperable.

Table A-4 Rod Position Indication (Cont'd.)

	Plant	LER No.	Age at Failure (years)	Failure Description
19	Millstone 2	336/81-037	7	Blown resistor in plant computer 36v power supply caused pulse counting position indicating system to become inoperable.
20	San Onofre 2	361/83-011	1	Erroneous rod position indication caused by faulty isolation amplifier card.
21	San Onofre 2	361/83-087	1	Faulty reed switch produced erroneous rod position indication.
22	San Onofre 2	361/86-027	4	Loose solder joint on RSPT produced wrong position indications leading to reactor trip.
23	Arkansas 2	368/80-053	2	Software problem caused failure of CEAC.
24	Arkansas 2	368/80-058	2	Software problem caused failure of CEAC.
25	Arkansas 2	368/80-080	2	Data link input card on the optical isolator and failed test circuit module card caused CEAC failure.
26	Arkansas 2	368/82-005	4	Failure of high level MUX gate card caused CEAC to show incorrect CEA positions.
27	Arkansas 2	368/83-029	5	Failure of high level MUX card caused CEAC failure.
28	Arkansas 2	368/85-018	7	Erroneous CEA position signals caused by failed field effect transistors in high level MUX card for CEAC caused reactor trip.
29	Arkansas 2	368/82-009	4	CEAC failed during excore instrumentation test.
30	Arkansas 2	368/82-040	4	CEAC failed, possibly as a result of lighting storm.
31	Waterford 3	382/86-009	1	Reactor trip caused by reed switch failure.
32	St. Lucie 2	389/83-047	7	Pulse counting CEA position system inoperable due to loss of computer.
33	San Onofre 3	362/84-024	1	Intermittent failure on computer board caused CEAC malfunction and reactor trip.
34	Palo Verde 1	528/89-004	4	CEAC inoperable due to failed processor board caused reactor scram.
35	San Onofre 2	361/84-043	2	Failed power supply in analog CEA position indication system, caused reactor scram and ESF actuation.
36	San Onofre 2	361/84-019	2	Faulty CEAC caused spurious position signals which caused reactor trip.
37	Calvert Cliffs 1	317/81-081	7	Primary CEA position indication lights and analog system malfunctioned.

Table A-4 Rod Position Indication (Cont'd.)

	Plant	LER No.	Age at Failure (years)	Failure Description
38	San Onofre 2	361/83-041	1	CEAC inoperable due to faulty isolation amplifier card due to overheating in the cabinet.
39	Arkansas 2	368/90-014	12	Failed RSPT transmitted erroneous PC signal to CEAC causing reactor trip.

Table A-5. Human Error

	Plant	LER No.	Age at Failure (years)	Failure Description
1	Calvert Cliffs 2	318/80-015	4	While changing backup power supply, the prime 15v CEA power supply was accidently grounded by electrician causing CEA to drop.
2	Calvert Cliffs 2	318/82-018	6	Electricians mistakenly started work on Unit-2 CEAs instead of Unit-1, causing CEA drop.
3	Calvert Cliffs 2	318/83-071	7	PDIL was rendered inoperable due to incorrect setpoints out of tolerance due to personnel error.
4	Calvert Cliffs 2	318/87-008	11	Upper gripper power switch for incorrect CEA was removed for maintenance, causing dropped CEA and manual shutdown.
5	St. Lucie 1	335/80-033	4	Technician shorted 15v power supply while taking measurements, causing rod drop and power reduction.
6	St. Lucie 1	335/80-040	4	While performing maintenance on drive control system, CEA dropped.
7	San Onofre 2	361/88-031	6	Rod drop test procedure did not correctly account for delay time during rod drop. Some rods may have exceeded requirements.
8	San Onofre 3	362/83-086	1	Technician interrupted power supply voltage to 23 CEA's during SU test, rendering CEAC inoperable.
9	Arkansas 2	368/85/015	7	While troubleshooting CEAC, electronic transient caused erroneous PI signal, causing DNBR trip. Procedures modified.
10	Arkansas 2	368/88-009	10	Rod drop test procedure did not correctly account for delay time during rod drop.
11	Waterford 3	382/85-051	1	While performing surveillance on CEAC, a incorrect constant was entered, which caused reactor trip.
12	Waterford 3	382/87-012	2	Inadequate procedure allowed both CEACs to be inoperable, resulting in reactor trip.
13	St. Lucie 2	389/85-006	2	Technician pulled wrong circuit card during troubleshooting causing 2 dropped CEAs.
14	Palo Verde 2	529/87-003	1	Procedural inadequacy did not require position verification for all CEA groups upon loss of CEAC.
15	Calvert Cliffs 2	318/87-008	11	Technicians removed power switch module for wrong CEA causing rod drop and reactor scram.
16	St. Lucie 1	335/86-005	10	During SD, problems were encountered with DDPS, which required reloading with a magnetic tape containing incorrect sensitivity factors. The technical manual did not require verification of sensitivity factors.

Table A-5 Human Error (Cont'd.)

	Plant	LER No.	Age at Failure (years)	Failure Description
17	Arkansas 2	368/80-057	2	CEAC inputs to CPC were inoperable due to personnel error, during maintenance.
18	St. Lucie 2	389/83-074	7	Pulse counting CEA position indicating system inoperable due to programming error.
19	St. Lucie 1	335/80-038	4	Failed timing module which overheated due to ventilation fan turned off for maintenance.
20	Waterford 3	383/86-002	1	Dropped CEA due to cabinet cooler switch being turned off, causing overheating of circuits. Reactor trip.

Table A-6. Unknown Cause

	Plant	LER No.	Age at Failure (years)	Failure Description
1	Calvert Cliffs 1	317/82-011	8	CEA dropped, power reduced.
2	Calvert Cliffs 2	318/80-007	4	CEA would not drive down electrically. During troubleshooting of control circuitry, rod became operable.
3	St. Lucie 1	335/82-051	6	While at full power, CEA dropped for unknown reason.
4	St. Lucie 1	335/82-069	6	While at full power, CEA dropped for unknown reasons.
5	St. Lucie 1	335/83-006	7	CEA slipped during CEA exercising, no cause found.
6	St. Lucie 1	335/83-007	7	CEA slipped during normal full power operation. No cause found.
7	St. Lucie 1	335/82-061	6	During rod positioning to minimize guide tube wear, rod dropped for unknown cause.
8	St. Lucie 1	335/85-005	9	While at full power, rod dropped for unknown reason.
9	San Onofre 2	361/83-155	1	CEAC declared inoperable due to spurious CEA position indication. No reason found.
10	Ft. Calhoun	285/82-005	9	CEA dropped while at full power for unknown cause. Power reduction.
11	Millstone 2	336/80-040	6	CEA dropped for unknown reasons while at full power.
12	Millstone 2	336/81-038	7	During routine CEA movement, rod dropped for unknown reasons.
13	Millstone 2	336/83-004	9	During routine surveillance, CEA dropped for unknown reasons. Power reduction.
14	Millstone 2	336/83-015	9	While at full power, rod dropped for unknown reasons. Power reduced.
15	Arkansas 2	368/84-013	6	Reactor trip from full power due to CEA drop for unknown cause.
16	St. Lucie I	335/81-027	5	CEA dropped for unknown reason.
17	St. Lucie 1	335/81-034	5	CEA dropped during normal CEA exercise for unknown reason.
18	St. Lucie 1	335/82-028	6	During normal CEA periodic CEA exercise, CEA dropped for unknown reason.
19	Calvert Cliffs 1	317/80-012	6	CEA dropped while performing routine surveillance test.

Table A-6 Unknown Cause (Cont'd.)

	Plant	LER No.	Age at Failure (years)	Failure Description
20	Calvert Cliffs 1	317/80-006	6	CEA dropped while performing routine surveillance test.
21	Calvert Cliffs 1	317/81-039	7	While performing routine maintenance test, CEA dropped for unknown reason. Power reduction.
22	Calvert Cliffs 1	317/82-036	8	During start up tests, rod dropped for unknown reason.
23	Calvert Cliffs 2	318/80-009	4	CEA dropped during performance of routine test for unknown reason.
24	Calvert Cliffs 2	318/83-076	7	During routine surveillance, tests over 30 day period, 2 CEAs have dropped into core with subsequent power reduction. No cause found.
25	St. Lucie 2	389/87-005	4	While at 100% power, 2 CEAs dropped into core for no apparent reason. Reactor shutdown.

Table A-7. Miscellaneous

	Plant	LER No.	Age at Failure (years)	Failure Description
1	Millstone 2	336/83-026	9	Top nozzle damage caused guide tube deformation.
2	Calvert Cliffs 2	318/83-060	7	Water from overflowing control room toilet seeped into cable spreading room where it shorted out coil power programmer components.
3	Arkansas 2	368/90-005	10	CEA stuck due to foreign material wedged between CEA finger and ID of FA guide tube. Reactor shutdown.
4	Maine Yankee	309/90-004	18	Failure of CEA center finger and caps, caused B4C pellets to fail into GT preventing CEA full insertion. Subsequent testing showed 2 additional CEA missing center finger end caps and 6 with cracks.

Appendix B

Summary of Licensee Event Report for Babcock & Wilcox
Control Rod Drive System
1980 - 1990

Table B-1	Cable and Connector LER's
Table B-2	CRD Control System LERs
Table B-3	CRDM LERs
Table B-4	Rod Position Indication LERs
Table B-5	Human Error LERs
Table B-6	Potential Loose Parts LERs
Table B-7	Unknown Failure Cause LERs

Table B-1. Cable and Conector LER's

	Plant	LER No.	Age at Failure (years)	Failure Description
1	Oconee 1	269/80-027	7	Power reduction resulted from dropped rod. C-phase on stator opened due to loose connector.
2	Oconee 1	269/87-010	14	Control power lost to control rods due to loose solder joint on a control rod sequencing card. Resultant reactor trip.
3	Davis Besse	346/81-012	4	Electrical noise from faulty penetration module caused faulty position indication.
4	Davis Besse	346/81-019	4	Faulty rod position indication caused by faulty API pentration module.
5	Davis Besse	346/81-061	4	Erratic API signals due to faulty penetration module.

Table B-2. CRD Control System LER's

	Plant	LER No.	Age at Failure (years)	Failure Description
1	Arkansas 1	313/83-024	9	Control rod group misalignment due to out movement restriction resulting in pole slippage.
2	Arkansas 1	313/88-003	14	Control rod group dropped due to malfunction of power sequencer programmer. Reactor trip.
3	Davis Besse	346/80-023	3	Failed 24 VDC power supply in programmer controller in group SCR supply cabinet caused improper rod movement. Reactor trip.
4	Davis Besse	346/82-011	5	Control rod drop due to blown fuse in transfer switch module. Power reduction.
5	Davis Besse	346/83-014	6	Rod drop due to blown fuse in transfer switch module.
6	Davis Besse	346/83-054	6	RPI inoperable due to failed phase of motor programmer.
7	Davis Besse	346/83-068	6	Rod drop due to failed fuse in motor programmer. Power reduction.
8	Davis Besse	346/83-071	6	Faulty motor power return SCR gate drive circuit caused RPI failure. Power reduction.
9	Davis Besse	346/84-001	7	Faulty logic card rendered APSRAs inoperable. Reactor power reduction.
10	Davis Besse	346/83-062	6	Reactor trip due to failed programmer board in CRDCS cabinets. Excessive dust in cabinets from concrete work.
11	Oconee 3	287/90-001	16	Dropped CR group due to power supply failure. Reactor trip.
12	Crystal River	302/89-091	12	Two CR groups simultaneous withdraw due to failed realy in CR transfer logic.
13	Oconee 3	287/90-003	16	Dropped CR group due to failed solid state programmer. Reactor trip.

Table B-3. CRDM LER's

	Plant	LER No.	Age at Failure (years)	Failure Description
1	Arkansas 1	313/82-020	8	Dropped rod due to stator failure. Reactor trip.
2	Davis Besse	346/81-038	4	Unable to withdraw rod due to fractured leaf spring on anti-rotational device. Reactor scram.
3	Davis Besse	346/85-006	8	Failed leaf spring setscrew prevented disengagement of lead screw. Failed TS drop time requirement.

Table B-4. Rod Position Indication LER's

	Plant	LER No.	Age at Failure (years)	Failure Description
1	Crystal River	302/82-035	5	Reed switch failure rendered API system inoperable.
2	Crystal River	302/83-006	6	API system inoperable due to failed reed switch.
3	Crystal River	302/83-061	6	API system inoperable due to failed reed switch.
4	Crystal River	302/85-023	8	Low voltage failure rendered RPI system inoperable. Reactor trip.
5	Crystal River	302/86-011	9	Relay failure in RPI circuitry rendered system inoperable.
6	Davis Besse	346/80-004	3	Lost rod position indication due to failed reed switch caused by excessive high temperature.
7	Davis Besse	346/80-013	3	API malfunction caused by blown fuse in power supply. Delayed SU.
8	Davis Besse	346/80-015	3	API system inoperable due to reed switch failure caused by excessive high temperature.
9	Davis Besse	346/80-025	3	Excessive high temperatures caused reed switch failure. API inoperable.
10	Davis Besse	346/80-015	3	Reed switch failure caused by excessive high temperature. API inoperable.

Table B-5. Human Error LER's

	Plant	LER No.	Age at Failure (years)	Failure Description
1	Davis Besse	346/88-029	11	Rod drop due to maintenance error while performing work on CRDCS. Power reduction.

Table B-6. Potential Loose Parts LER's

	Plant	LER No.	Age at Failure (years)	Failure Description
1	Oconee 1	269/80-015	7	Broken fuel assembly holddown springs.
2	Oconee 1	269/81-011	8	Broken lower thermal shield bolts.
3	Oconee 1	269/83-013	10	Broken fuel assembly holddown springs.
4	Oconee 2	270/82-002	9	Failed lower thermal shield bolts.
5	Oconee 3	287/82-007	8	Broken fuel assembly holddown springs.
6	Oconee 3	287/82-008	8	Failed bolts for core barrel thermal shield.
7	Oconee 3	287/87-001	13	Debris from failed reactor coolant pump lodged in fuel assembly.
8	Crystal River	302/80-019	3	Failed fuel assembly holddown springs.
9	Davis Besse	346/80-040	3	Twenty broken fuel assembly holddown springs.
10	Davis Besse	346/88-015	11	Debris found in reactor vessel prior to refuel.

Table B-7. Unknown Cause

	Plant	LER No.	Age at Failure (years)	Failure Description
1	Oconee 2	270/89-007	16	Rod dropped for unknown reason. Unit operated in unanalyzed condition in violation of TS. Unit shutdown.

APPENDIX C

Industry Survey of Current CEDM Operating Experience, Inspection, and Maintenance Practices

NPAR QUESTIONNAIRE

Combustion Engineering Control Element Drives

Background and Objective

This questionnaire requests information from utility engineers concerning maintenance and operating experience with Combustion Engineering control element drive systems (both rack and pinion and magnetic jack designs). Details on inspections and preventive maintenance, as well as for repairs and modifications, will be of assistance to the NRC Nuclear Plant Aging Research (NPAR) program. A goal of the program is to identify inspection and maintenance methods that assure detection of aging effects prior to loss of safety functions.

Questionnaire Organization

The questionnaire is divided into three main sections. The first section contains detailed operating and experience questions for CED components both inside and outside of containment. The second section addresses general system tests. The final section contains general type questions, and requests that respondents provide information copies of any relevant system descriptions, maintenance schedules, procedures or calibrations which would supplement questionnaire responses.

Table Of Contents

I. CEDM System Inspections, Maintenance, Modifications

A. CED System Components Inside Containment

1. Control Element Assemblies
2. Latches and Drive Shaft
3. Pressure Housings

a. Seal Welds
b. Vent Valve
c. Other Pressure Housing Features

4. Coil Stack Assembly

a. Coil Stack Components
b. CEDM Cooling System

5. Cables and Connectors
6. Position Indication System
7. Other

B. CED System Components Outside Containments

1. Cables, Connectors, Terminations
2. Power Supplies
3. Control and Logic Cabinets
4. Other

II. CEDM System Tests

A. Control Element Position Verification Test
B. Control Element Drop Time Test
C. Other Tests

III. General

A. Control Element Exercising
B. Reliability and Trend Analysis
C. Overall Ranking
D. Supporting Documents

NPAR QUESTIONNAIRE

CE Control Element Drives

Plant Name:_____

Plant Contact:_____ Phone No.:(__)_____

Please provide the requested information. If additional sheets are required, please clearly identify appropriate section.

What CEDM Model No. is installed at your plant? (If more than one, please list)

_____

How many such CEDM's are installed at your plant?

_____

How long has it been since such CEDM's were initially installed?

_____

How much operating time has accumulated for these CEDM's (i.e. hours, months/years of operation)?

_____

Which CEDM design is used at your plant?
Rack and Pinion_____ Magnetic Jack_____

I. CEDM SYSTEM INSPECTIONS, MAINTENANCE, MODIFICATIONS

A. CED System Components Inside Containment

1. Control Element Assemblies

Please briefly describe the full length CEA's used in your plant (number, poison material, unique design features, corner rod/center rod differences).

_____
_____
_____

Please briefly describe the part length CEA's used in your plant (number, poison material, unique design features).

_____
_____
_____

Please summarize any indications of unusual CEA wear, crud buildup or any other indication of interference with guide tubes, upper guide structure assembly, or CEA shrouds. When and how were the indications discovered? Where were the indications?

_____
_____
_____

What inspections are performed on control element, guide tubes, CEA shrouds, etc. How many components are inspected and with what frequency (each refueling outage, etc.)?

_____
_____
_____

How are your plants control elements attached to the spider?(by a nut, or threaded into spider arm)

_____
_____
_____

2. Latches and Drive Shaft

Are inspections/preventive maintenance performed on:
Latches (wear, crud buildup, etc.)? Yes_____ No_____
If yes, how often? _____
Describe inspection or PM:

_____
_____
_____

Drive Shaft (wear, crud buildup, etc.)? Yes_____ No_____
If yes, how often?_____
Describe inspection or PM:

_____
_____
_____

Summarize corrective maintenance or replacements of latches or drive shafts (component, when, reason).

_____
_____
_____

If used, are the CEDM's for the part length CEA's modified to prevent insertion during a scram? Yes_____ No_____

3. Pressure Housing
a. Seal Welds

In response to the following questions, please consider both welds individually.

1. Motor Assembly Housing to Reactor Vessel Head
2. Upper Pressure Housing to Motor Assembly Housing

Are the following inspections performed on the seal welds?
NDE? Yes_____No_____Frequency_____
Description of tests:

_____
_____
_____
_____

Hydrostatic? Yes_____ No_____ Frequency _____
Please describe any other inspections or tests which are performed (indicate which weld and frequency).

_____
_____
_____
_____

How many seal welds have been cut and rewelded?

_____

Which_____Frequency _____
Reason

_____
_____
_____
_____

Has the design of the seal weld been modified? Yes_____ No_____
Which

_____
Describe modification:

_____
_____
_____
_____

What type of seal is used (Omega, etc.)?

_____

Which_____ Has the seal design changed?Yes_____ No_____
If yes, please describe

_____
_____
_____

Does your plant have a seal inspection program? Yes_____ No_____
Frequency_____

b. Vent Valve

Are the vent valves opened and closed for any maintenance operations?
Yes_____ No_____ Frequency _____
Reason:

_____
_____
_____

Are the vent valves hydrostatically tested? Yes_____ No_____
Frequency_____

Has any vent valve leakage (or indications of) been noted?
Yes_____ No_____ How many _____
Describe (severity, effects):

_____
_____
_____

Summarize what corrective maintenance or replacement of valves has been performed at your plant:

_____
_____
_____
_____

Has the vent valve design changed? Yes_____ No_____
Please describe:

_____
_____
_____
_____

c. Other Pressure Housing Features

Please briefly discuss any other inspections, maintenance, replacements or modifications not addressed above:

_____
_____
_____
_____

4. Coil Stack Assembly

a. Coil Stack Components

Are the following inspections or tests performed on the coils?
Physical inspection? Yes_____No_____Frequency_____
Features examined:

_____
_____
_____

Electrical tests? Yes_____ No_____ Frequency_____

Describe test procedure and equipment:

_____
_____
_____
_____

Summarize corrective maintenance or replacements of coils or assembly wiring (component, when, reason):

_____
_____
_____
_____

Has the coil stack assembly (or individual coils) design or operating parameters (voltage, current) been modified? Yes_____ No_____
When_____

Please describe:

_____
_____
_____
_____

b. CEDM Cooling System

Is the performance of the cooling system monitored during operation?
Yes_____ No_____

Describe (parameters, alarms):

_____
_____
_____
_____

Are inspections, test, or preventive maintenance performed on the cooling system? Yes_____ No_____
Please describe:

_____
_____
_____
_____

Has the cooling system been modified? Yes_____ No_____
Describe (include effect of change on coil cooling):

_____
_____
_____
_____

Are the coils and coil stack assembly temperatures monitored? Yes____ No____
How_____

Are the temperatures recorded? Yes____ No____
What are representative coil temperatures?_____
Location_____
(estimate if not available)_____
Have there been any incidents of loss of coil cooling? Yes____ No____
Describe (number, duration, effect on coils and CEDM).

5. Cables and Connectors

Are the following inspections, tests or preventive maintenance performed?
Insulation degradation or wear? Yes____ No____
Frequency_____
Describe (visual, electrical test):

Connector pin condition (corrosion, loose)? Yes____ No____
Frequency_____
Connector watertight seal? Yes____ No____
Frequency_____
Other tests (description, frequency)

Please summarize corrective maintenance or replacement of connectors or cables (component, when, reason):

If replaced please indicate original and replacement model No. and manufacturer:
Original:_____
Replacement:_____
Have cables or connectors been modified? Yes____ No____

Describe:

_____
_____
_____
_____

What is the reactor head area ambient temperature during operation?

_____

(Actual or estimated)_____

6. Position Indication System

Are the following tests or inspections performed on the
#1: Pulse Counting CEA Position Indication System
#2: Reed Switch CEA Position Indication System

Physical inspection? Yes_____ No_____ Which system?_____
Frequency_____
Describe (feature examined, inspection method):

_____
_____
_____
_____

Electrical tests? Yes_____ No_____ Which system?_____
Frequency_____
Describe (procedure, test equipment):

_____
_____
_____
_____

Other tests or inspections? Yes_____ No_____
Whichsystem_____Frequency_____
Describe (tests, equipment used):

_____
_____
_____
_____

Please provide summary of corrective maintenance or replacements (component, system, when, reason):

_____
_____
_____
_____

Has the design of the RPI systems been modified? Yes_____ No_____

System:_____

Describe:

Has there been any unusual calibration or system drift problems?
Yes____No____System_____
Describe:

7. Other

Please summarize any inspections/preventive maintenance of CEDM components inside containment that were not addressed above (component, frequency, description)

Please summarize any modifications or corrective maintenance of CEDM components inside containment which were not addressed above (components, when, reason):

Please summarize any incidents or occurrences which affected CED system performance (i.e. spills, impacts, work on other systems, etc.):

B. CED System Components Outside Containment

1. Cables, Connectors, Terminations

Please describe inspection and preventive maintenance (frequency, activity):

Please summarize corrective maintenance performed (type of repair, component):

_____
_____
_____
_____

2. Power Supplies

Please describe inspection, periodic component testing, and preventive maintenance (Frequency, which power supply):

_____
_____
_____
_____

Are the power supplies monitored during operation?
Yes_____ No_____
Describe:

_____
_____
_____

Please summarize corrective maintenance performed (type or repair, number):

_____
_____
_____
_____

3. Control and Logic Cabinets

Describe Inspection, periodic component testing and preventive maintenance.
Description (component, activity, frequency):

_____
_____
_____
_____

Are the components monitored during operation? Yes_____ No_____
Describe:

_____
_____
_____
_____

Please summarize corrective maintenance performed (number, type of repair):

_____
_____
_____
_____

Is the ambient temperature of the cabinets monitored?
Yes____No____Method_____

_____

What is the average cabinet ambient temperature?_____
Is this measured or estimated?_____

Has there been any significant logic or control changes? Yes_____ No_____
Describe (what, when, components changed)

_____
_____
_____
_____

4. Other

Please discuss briefly any inspection, periodic component testing, and preventive maintenance of CEDM components outside of containment that were not described above (component, frequency, description of activity):

_____
_____
_____
_____

Please briefly discuss any modifications to the original CEDM system located outside of containment which were not discussed above (component, when):

_____
_____
_____
_____

Please summarize other CEDM system parameters which are monitored during operation not discussed above:

_____
_____

II. CEDM SYSTEM TESTS

A. Control Element Position Verification Test

Is this test performed? Yes_____ No_____ Frequency_____
Is this a Tech. Spec. requirement? Yes_____ No_____
What parameters are monitored?

_____
_____

B. Control Element Drop Time Test

Is this test performed? Yes_____ No_____ Frequency_____

Is this a Tech. Spec. requirement? Yes_____ No_____

What parameters are monitored?

_____

_____

C. Other tests

What tests, other than those above, are routinely performed? (test, frequency, parameters monitored)

_____

_____

What tests are performed on the CEDM pressure housing to ensure integrity? (test, frequency)

_____

_____

III. General

A. Control Element Exercising

During operation, are individual control elements periodically exercised if they have not been moved in normal operation for some period? Yes_____ No_____
Frequency_____
Procedure_____

_____

B. Reliability and Trend Analysis

Is a reliability and trend analysis in place for the CEDM system?
Yes_____ No_____

What key parameters are evaluated?

_____

_____

Does your program track other plants' experience? Yes_____ No_____
What is the information source used for your trend analysis?

_____

_____

C. Overall Ranking

In your opinion, what three parameters monitored, inspections performed, or tests conducted are most important to ensure operational readiness of the CRD system?

1._____
2._____
3._____

D. Supporting Documents

1. Please provide an information copy if the following to assist in understanding the CEDM operation and maintenance.

Calibration and functional test procedures for rod position and CED control systems. Attached? Yes_____ No_____

Control Element drop time test procedure.
Attached? Yes_____ No_____

CEDM inspection procedure.
Attached? Yes_____ No_____

CED System Description.
Attached? Yes_____ No_____

2. Please attach any computer printouts which describe preventive maintenance practices and schedules, component calibration intervals, and/or corrective maintenance that has been performed, if possible.

3. Please provide any additional information which may help in understanding the responses to this questionnaire, or which you feel is pertinent to the study of CED system aging.

Appendix D

Industry Survey of Current CRDM Operating Experience, Inspection, and Maintenance Practices

Background and Objective

This questionnaire requests information from utility engineers concerning maintenance and operating experience with Babcock & Wilcox control rod drive systems. Details on inspections and preventive maintenance, as well as for repairs and modifications, will be of assistance to the NRC Nuclear Plant Aging Research (NPAR) program. A goal of the program is to identify inspection and maintenance methods that assure detection of aging effects prior to loss of safety functions.

Questionnaire Organization

The questionnaire is divided into three main sections. The first section contains detailed operating and experience questions for CRD components both inside and outside of containment. The second section addresses general system tests. The final section contains general type questions, and requests that respondents provide information copies of any relevant system descriptions, maintenance schedules, procedures or calibrations which would supplement questionnaire responses.

Table Of Contents

I. CRDM System Inspections, Maintenance, Modifications

A. CRD System Components Inside Containment

1. Control Rod Assemblies
2. Roller Nuts and Leadscrew
3. Motor Tube

a. Welds
b. Flange Seals
c. Vent Valve
d. Other Motor Tube Features

4. Coil Stack Assembly

a. Coil Stack Components
b. CRDM Cooling System

5. Cables and Connectors
6. Position Indication System
7. Other

B. CRD System Components Outside Containments

1. Cables, Connectors, Terminations
2. Power Supplies
3. Control and Logic Cabinets
4. Other

II. CRDM System Tests

A. Control Rod Position Verification Test
B. Control Rod Drop Time Test
C. Other Tests

III. General

A. Control Rod Exercising
B. Reliability and Trend Analysis
C. Overall Ranking
D. Supporting Documents

NPAR QUESTIONNAIRE

B&W Control Rod Drives

Plant Name:_____

Plant Contact:_____ Phone No.:(___)_____

Please provide the requested information. If additional sheets are required, please clearly identify appropriate section.

What CRDM (Type A, B, or C) is installed at your plant? (If more than one, please list)_____

How many such CRDM's are installed at your plant?

_____

How long has it been since such CRDM's were initially installed?

_____

How much operating time has accumulated for these CRDM's (i.e. hours, months/years of operation)?

_____

I. CRDM SYSTEM INSPECTIONS, MAINTENANCE, MODIFICATIONS

A. CRD System Components Inside Containment

1. Control Rod Assemblies

Please briefly describe the control rod assemblies used in your plant (number, poison material etc.).

_____

_____

_____

Please briefly describe the axial power shaping rod assemblies used in your plant (number, poison material, etc.).

_____

_____

_____

Please summarize any indications of unusual CRA wear, crud buildup or any other indication of interference with fuel assembly guide tubes, CRA guide tube assemblies. When and how were the indications discovered? Where were the indications?

_____
_____
_____
_____

What inspections are performed on control rods, axial power shaping rods, guide tubes, CRA guide tubes, etc. How many components are inspected and with what frequency (each refueling outage, etc.)?

_____
_____
_____
_____

2. Roller Nuts and Leadscrew

Are inspections/preventive maintenance performed on:
Roller Nuts (wear, crud buildup, etc.)? Yes_____ No_____
If yes, how often?_____
Describe inspection or PM:

_____
_____
_____
_____

Leadscrew (wear, crud buildup, etc.)? Yes_____ No_____
If yes, how often?_____
Describe inspection or PM:

_____
_____
_____
_____

Male Bayonet Coupling (wear, etc.)? Yes_____ No_____ How often_____
Describe inspection and any significant findings:

_____
_____
_____
_____

Summarize corrective maintenance or replacements of roller nuts or lead screw (component, when, reason).

_____
_____
_____
_____

3. Motor Tube

a. Welds

Are the following inspections performed on the motor tube welds?
NDE? Yes____ No____ Frequency_____

Description of tests:

_____
_____
_____
_____

Hydrostatic? Yes____ No____ Frequency_____

Please describe any other inspections or tests which are performed (indicate which weld and frequency). _____
_____
_____
_____

How many motor tube welds have been cut and rewelded?_____

Which_____ Frequency_____

Reason:

_____
_____
_____

b. Flange Seals

What type of gaskets are used to seal the CRDM to the reactor head? (size, number, material, etc.)

_____
_____
_____

How often does your plant replace these gaskets?

_____
_____

Are gasket inspections part of a normal PM procedure? Yes____ No____

Howmanyareinspected?_____

Has the design of these seals changed? Yes____ No____ How_____
_____
_____

c. Vent Valve

Are the vent valves opened and closed for any maintenance operations?
Yes____No____Frequency_____
Reason:

_____
_____
_____

Are the vent valves hydrostatically tested? Yes____ No____
Frequency_____

Has any vent valve leakage (or indications of) been noted?

Yes____ No____ How many_____

Describe (severity, effects):

_____
_____
_____
_____

Summarize what corrective maintenance or replacement of valves has been performed at your plant:

_____
_____
_____
_____

Has the vent valve design changed? Yes____ No____
Please describe:

_____
_____
_____
_____

d. Other Motor Tube Features

Please briefly discuss any other inspections, maintenance, replacements or modifications not addressed above:

_____
_____
_____
_____

4. Stator Assembly

a. Stator Components
Are the following inspections or tests performed on the stator coils?
Physical inspection? Yes____ No____ Frequency_____

Features examined:

_____
_____
_____
_____

Electrical tests? Yes____ No____ Frequency_____

Describe test procedure and equipment:

_____
_____
_____
_____

Summarize corrective maintenance or replacements of coils or assembly wiring (component, when, reason):

_____
_____
_____
_____

Has the stator assembly (or individual coils) design or operating parameters (voltage, current) been modified? Yes____ No____
When_____
Please describe:

_____
_____
_____
_____

b. CRDM Cooling System

Is the performance of the cooling system monitored during operation?
Yes____ No____
Describe (parameters, alarms):

_____
_____
_____
_____

Are inspections, test, or preventive maintenance performed on the cooling system? Yes____ No____
Please describe:

_____
_____
_____
_____

Has the cooling system been modified? Yes____ No____

Describe (include effect of change on coil cooling):

_____
_____
_____
_____

Are the stator assembly temperatures monitored? Yes_____ No_____

How_____
_____
_____
_____
_____

Are the temperatures recorded? Yes_____ No_____

What are representative coil temperatures?_____

Location_____

(estimate if not available)_____

Have there been any incidents of loss of coil cooling? Yes_____ No_____
Describe (number, duration, effect on coils and CRDM).

_____
_____
_____
_____

5. Cables and Connectors

Are the following inspections, tests or preventive maintenance performed?
Insulation degradation or wear? Yes_____ No_____

Frequency_____

Describe (visual, electrical test):

_____
_____
_____
_____

Connector pin condition (corrosion, loose)? Yes_____ No_____
Frequency_____

Connector watertight seal? Yes_____ No_____

Frequency_____

Other tests (description, frequency)

_____
_____
_____
_____

Please summarize corrective maintenance or replacement of connectors or cables (component, when, reason):

_____
_____
_____
_____

If replaced please indicate original and replacement model No. and manufacturer:
Original:_____

Replacement:_____

Have cables or connectors been modified? Yes_____ No_____
Describe:

_____
_____
_____
_____

What is the reactor head area ambient temperature during operation?

_____

(Actual or estimated)

_____

6. Position Indication System

Are the following tests or inspections performed on the:
#1: Relative Position Indication System
#2: Absolute Position Indication System

Physical inspection? Yes_____ No_____ Which system?_____

Frequency_____

Describe (feature examined, inspection method):

_____
_____
_____
_____

Electrical tests? Yes_____ No_____ Which system?_____
Frequency_____

Describe (procedure, test equipment):

_____
_____
_____
_____

Other tests or inspections? Yes_____ No_____
Which system_____ Frequency_____
Describe (tests, equipment used):

_____
_____
_____
_____

Please provide summary of corrective maintenance or replacements (component, system, when, reason):

_____
_____
_____
_____

Has the design of the reed switch system been modified? Yes_____ No_____
Describe:

_____
_____
_____
_____

Can the absolute system operate with failed reed switches? Yes_____ No_____
What type of reed switches does your plant use? (i.e. R4C)

_____
_____

Has there been any unusual calibration or system drift problems?
Yes_____ No_____ System_____
Describe:

_____
_____
_____
_____

7. Other

Please summarize any inspections/preventive maintenance of CRDM components inside containment that were not addressed above (component, frequency, description)

_____
_____
_____
_____

Please summarize any modifications or corrective maintenance of CRDM components inside containment which were not addressed above (components, when, reason):

Please summarize any significant occurrences with the CRA coupling tool (design changes, regular maintenance, inspections, operating difficulties, etc.):

Please summarize any incidents or occurrences which affected CRD system performance (i.e. spills, impacts, work on other systems, etc.):

B. CRD System Components Outside Containment

1. Cables, Connectors, Terminations

Please describe inspection and preventive maintenance (frequency, activity):

Please summarize corrective maintenance performed (type of repair, component):

2. Power Supplies

Please describe inspection, periodic component testing, and preventive maintenance (Frequency, which power supply):

Are the power supplies monitored during operation?
Yes_____ No_____ Describe:

_____
_____
_____
_____

Please summarize corrective maintenance performed (type or repair, number):

_____
_____
_____
_____

3. Control and Logic Cabinets

Describe Inspection, periodic component testing and preventive maintenance.
Description (component, activity, frequency):

_____
_____
_____
_____

Are the components monitored during operation? Yes_____ No_____

Describe:

_____
_____
_____
_____

Please summarize corrective maintenance performed (number, type of repair):

_____
_____
_____
_____

Is the ambient temperature of the cabinets monitored?

Yes_____ No_____ Method_____
_____

What is the average cabinet ambient temperature?_____
Is this measured or estimated?_____
Has there been any significant logic or control changes? Yes_____ No_____
Describe (what, when, components changed)_____

_____
_____
_____
_____

4. Other

Please discuss briefly any inspection, periodic component testing, and preventive maintenance of CRDM components outside of containment that were not described above (component, frequency, description of activity):

_____
_____
_____
_____

Please briefly discuss any modifications to the original CRDM system located outside of containment which were not discussed above (component, when):

_____
_____
_____
_____

Please summarize other CRDM system parameters which are monitored during operation not discussed above:

_____
_____
_____

II. CRDM SYSTEM TESTS

A. Control Rod Position Verification Test

Is this test performed? Yes_____ No_____ Frequency_____
Is this a Tech. Spec. requirement? Yes_____ No_____
What parameters are monitored?_____
_____

B. Control Rod Drop Time Test

Is this test performed? Yes_____ No_____ Frequency_____
Is this a Tech. Spec. requirement? Yes_____ No_____
What parameters are monitored?_____
_____

C. Other tests

What tests, other than those above, are routinely performed? (test, frequency, parameters monitored)

_____
_____
_____

What tests are performed on the CRDM motor tube to ensure integrity? (test, frequency)

_____
_____

III. General

A. Control Rod Exercising

During operation, are individual control rods periodically exercised if they have not been moved in normal operation for some period? Yes_____ No_____

Frequency_____

Procedure_____

_____

B. Reliability and Trend Analysis

Is a reliability and trend analysis in place for the CRDM system?
Yes_____ No_____
What key parameters are evaluated?

_____

_____

Does your program track other plants' experience? Yes_____ No_____
What is the information source used for your trend analysis?

_____

_____

C. Overall Ranking

In your opinion, what three parameters monitored, inspections performed, or tests conducted are most important to ensure operational readiness of the CRD system?

1._____
2._____
3._____

D. Supporting Documents

1. Please provide an information copy if the following to assist in understanding the CRDM operation and maintenance.

Calibration and functional test procedures for rod position and CRD control systems. Attached?
Yes_____ No_____
Control Rod drop time test procedure.
Attached? Yes_____ No_____
CRDM inspection procedure.
Attached? Yes_____ No_____
CRD System Description.
Attached? Yes_____ No_____

2. Please attach any computer printouts which describe preventive maintenance practices and schedules, component calibration intervals, and/or corrective maintenance that has been performed, if possible.

3. Please provide any additional information which may help in understanding the responses to this questionnaire, or which you feel is pertinent to the study of CRD system aging.

NRC FORM 335 (2-89) NRCM 1102, 3201, 3202

U.S. NUCLEAR REGULATORY COMMISSION

BIBLIOGRAPHIC DATA SHEET

(See instructions on the reverse)

1. REPORT NUMBER (Assigned by NRC, Add Vol., Supp., Rev., and Addendum Numbers, if any.)

NUREG/CR-5783
BNL-NUREG-52299

2. TITLE AND SUBTITLE

Aging Assessment of the Combustion Engineering and Babcock & Wilcox Control Rod Drives

3. DATE REPORT PUBLISHED

MONTH	YEAR
January	1993

4. FIN OR GRANT NUMBER

A3270

5. AUTHOR(S)

E. Grove, W. Gunther

6. TYPE OF REPORT

Technical

7. PERIOD COVERED *(Inclusive Dates)*

8. PERFORMING ORGANIZATION – NAME AND ADDRESS *(If NRC, provide Division, Office or Region, U.S. Nuclear Regulatory Commission, and mailing address; if contractor, provide name and mailing address.)*

Brookhaven National Laboratory
Upton, NY 11973

9. SPONSORING ORGANIZATION – NAME AND ADDRESS *(If NRC, type "Same as above"; if contractor, provide NRC Division, Office or Region, U.S. Nuclear Regulatory Commission, and mailing address.)*

Division of Engineering
Office of Nuclear Regulatory Research
U.S. Nuclear Regulatory Commission
Washington, DC 20555

10. SUPPLEMENTARY NOTES

11. ABSTRACT *(200 words or less)*

The effects of aging upon the Babcock & Wilcox (B&W) and Combustion Engineering (CE) control rod drive systems have been evaluated. For this study, the CRD system boundary included the control rod assemblies, guide tubes, control rod drive mechanism, control system components, rod position indication components, and cooling system. Detailed operation experience data for 1980 to 1990 was evaluated to identify the predominant failure modes, causes, and effects. The results of this evaluation, along with an assessment of component material and operating environment, lead to the conclusion that both the B&W and CE CRD systems are susceptible to age degradation. Failures of the CRD system have resulted in significant plant effects including power reductions, plant shutdowns, scrams, and ESF actuations.

Information on current plant system inspection and maintenance practices were obtained from two B&W plants, and four CE plants through an industry survey. The results of this survey indicate that some plants have modified the system, replaced components, and established preventive maintenance programs, some of which effectively address the aging issue, while others do not. The potential application of some advanced monitoring inspection techniques are discussed.

12. KEY WORDS/DESCRIPTORS *(List words or phrases that will assist researchers in locating the report.)*

Control Rod Drives - Aging, PWR Type Reactors - Aging, Reactor Control Systems - Control Rod Drives, Reactor Components - failures, Reactor Safety, failure mode analysis, thermal degradation, wear, service life, scram, Reactor Maintenance, Reactor Monitoring Systems, inspection

13. AVAILABILITY STATEMENT

Unlimited

14. SECURITY CLASSIFICATION

(This Page) Unclassified

(This Report) Unclassified

15. NUMBER OF PAGES

16. PRICE

Printed on recycled paper

Federal Recycling Program

UNITED STATES
NUCLEAR REGULATORY COMMISSION
WASHINGTON, D.C. 20555-0001

OFFICIAL BUSINESS
PENALTY FOR PRIVATE USE, $300

SPECIAL FOURTH-CLASS RATE
POSTAGE AND FEES PAID
USNRC
PERMIT NO. G-67