NUREG/CR-4279
PNL-5479
Vol. 1

Aging and Service Wear of Hydraulic and Mechanical Snubbers Used on Safety-Related Piping and Components of Nuclear Power Plants

Phase I Study

Prepared by S. H. Bush, P. G. Heasler, R. E. Dodge

Pacific Northwest Laboratory
Operated by
Battelle Memorial Institute

Prepared for
U.S. Nuclear Regulatory
Commission

NOTICE

This report was prepared as an account of work sponsored by an agency of the United States Government. Neither the United States Government nor any agency thereof, or any of their employees, makes any warranty, expressed or implied, or assumes any legal liability of responsibility for any third party's use, or the results of such use, of any information, apparatus, product or process disclosed in this report, or represents that its use by such third party would not infringe privately owned rights.

NOTICE

Availability of Reference Materials Cited in NRC Publications

Most documents cited in NRC publications will be available from one of the following sources:

1. The NRC Public Document Room, 1717 H Street, N.W.
   Washington, DC 20555
2. The Superintendent of Documents, U.S. Government Printing Office, Post Office Box 37082, Washington, DC 20013-7082
3. The National Technical Information Service, Springfield, VA 22161

Although the listing that follows represents the majority of documents cited in NRC publications, it is not intended to be exhaustive.

Referenced documents available for inspection and copying for a fee from the NRC Public Document Room include NRC correspondence and internal NRC memoranda; NRC Office of Inspection and Enforcement bulletins, circulars, information notices, inspection and investigation notices; Licensee Event Reports; vendor reports and correspondence; Commission papers; and applicant and licensee documents and correspondence.

The following documents in the NUREG series are available for purchase from the GPO Sales Program: formal NRC staff and contractor reports, NRC-sponsored conference proceedings, and NRC booklets and brochures. Also available are Regulatory Guides, NRC regulations in the *Code of Federal Regulations*, and *Nuclear Regulatory Commission Issuances*.

Documents available from the National Technical Information Service include NUREG series reports and technical reports prepared by other federal agencies and reports prepared by the Atomic Energy Commission, forerunner agency to the Nuclear Regulatory Commission.

Documents available from public and special technical libraries include all open literature items, such as books, journal and periodical articles, and transactions. *Federal Register* notices, federal and state legislation, and congressional reports can usually be obtained from these libraries.

Documents such as theses, dissertations, foreign reports and translations, and non-NRC conference proceedings are available for purchase from the organization sponsoring the publication cited.

Single copies of NRC draft reports are available free, to the extent of supply, upon written request to the Division of Technical Information and Document Control, U.S. Nuclear Regulatory Commission, Washington, DC 20555.

Copies of industry codes and standards used in a substantive manner in the NRC regulatory process are maintained at the NRC Library, 7920 Norfolk Avenue, Bethesda, Maryland, and are available there for reference use by the public. Codes and standards are usually copyrighted and may be purchased from the originating organization or, if they are American National Standards, from the American National Standards Institute, 1430 Broadway, New York, NY 10018.

NUREG/CR-4279
PNL-5479
Vol. 1
RM, RV

Aging and Service Wear of Hydraulic and Mechanical Snubbers Used on Safety-Related Piping and Components of Nuclear Power Plants

Phase I Study

Manuscript Completed: January 1986
Date Published: February 1986

Prepared by
S. H. Bush, P. G. Heasler, R. E. Dodge

Pacific Northwest Laboratory
Richland, WA 99352

Prepared for
Division of Engineering Technology
Office of Nuclear Regulatory Research
U.S. Nuclear Regulatory Commission
Washington, D.C. 20555
NRC FIN B2865

FOREWORD

This report is based on the snubber operating experience for the past several years, primarily licensee event reports (LERs). Aging mechanisms that influence snubber failures are assessed. The adequacy of current testing and examination procedures is discussed, and suggestions are given for changes when the procedures are considered to be inadequate. A conclusion from this report is that many snubbers installed in nuclear power plants may be unnecessary and could be removed. Work outside the scope of this report has confirmed that the removal of many snubbers can be justified. An approved approach to evaluate snubber removal has been incorporated into ASME III and approved by the U.S. Nuclear Regulatory Commission (NRC) on a case-by-case basis.

This report constitutes an NRC special study of snubber experience from the standpoint of reducing the number of snubbers currently in use. The study includes a preliminary assessment of snubber aging characteristics and mechanisms. However, a treatment of the snubber as an assembly and systematic consideration of each component or subcomponent in terms of materials of construction, stresses, failures due to aging and service wear, and measurable functional indicators was not undertaken. Such work will be included in Phase II of this investigation.

This review was conducted under the NRC's Nuclear Plant Aging Research Program; it is a transition report that may be modified in the future. In particular, the positions relative to examination and testing and the suggested changes in these requirements may be modified. Obvious interfaces exist with the ANSI/ASME OM4 Committee on Snubbers and ASME XI, Section IWF. Comments and suggestions that could impact the Phase II study are welcomed. There is a recognized need to develop a viable interface among the NRC, the relevant codes and standards, and the nuclear industry with regard to the scope of the Phase II study. Currently, the scope of the Phase II study consists of: 1) a comprehensive aging assessment of hydraulic and mechanical snubbers; 2) a review and verification of inspection, surveillance, and monitoring methods; and 3) establishment of application guidelines within appropriate codes, standards, and regulations.

The information presented in this report was obtained from many sources over a period of several years. Reference notations are given where possible. A bibliography is also provided.

ABSTRACT

This report presents an overview of hydraulic and mechanical snubbers used on nuclear piping systems and components, based on information from the literature and other sources. The functions and functional requirements of snubbers are discussed. The real versus perceived need for snubbers is reviewed, based primarily on studies conducted by a Pressure Vessel Research Committee. Tests conducted to qualify snubbers, to accept them on a case-by-case basis, and to establish their fitness for continued operation are reviewed.

This report had two primary purposes. The first was to assess the effects of various aging mechanisms on snubber operation. The second was to determine the efficacy of existing tests in determining the effects of aging and degradation mechanisms. These tests include breakaway force, drag force, velocity/acceleration range for activation in tension or compression, release rates within specified tension/compression limits, and restricted thermal movement. The snubber operating experience was reviewed using licensee event reports and other historical data for a period of more than 10 years. Data were statistically analyzed using arbitrary snubber populations. Value-impact was considered in terms of exposure to a radioactive environment for examination/testing and the influence of lost snubber function and subsequent testing program expansion on the costs and operation of a nuclear power plant. The implications of the observed trends were assessed; recommendations include modifying or improving examination and testing procedures to enhance snubber reliability. Optimization of snubber populations by selective removal of unnecessary snubbers was also considered.

CONTENTS

FOREWORD iii

ABSTRACT v

1.0 INTRODUCTION 1.1

2.0 BACKGROUND INFORMATION 2.1

2.1 WHAT IS A SNUBBER? 2.1

2.2 TYPES OF SNUBBERS 2.3

2.3 FUNCTIONAL REQUIREMENTS 2.5

2.4 MATERIALS AND CONSTRUCTION 2.9

2.5 SNUBBER LOCATIONS 2.12

3.0 TECHNICAL SPECIFICATION REQUIREMENTS INCLUDING REVIEW OF RELEVANT STANDARDS AND GUIDES 3.1

3.1 SNUBBER DESIGN CRITERIA 3.2

3.2 QUALIFICATION VERSUS ACCEPTANCE TESTING 3.6

3.3 TECHNICAL SPECIFICATIONS 3.8

3.4 CURRENT PRESERVICE AND IN-SERVICE TESTING REQUIREMENTS IN RELEVANT CODE/REGULATORY DOCUMENTS 3.10

3.5 EXISTING AND POTENTIAL TESTING PROBLEMS 3.11

3.6 SUGGESTED CHANGES IN SNUBBER TESTING AND EXAMINATION PROCEDURES 3.13

4.0 OPERATIONAL STRESSES 4.1

4.1 MECHANICAL 4.1

4.2 THERMAL 4.1

4.3 CHEMICAL/ENVIRONMENTAL 4.1

4.4 RADIATION 4.2

4.5 SYNERGISTIC EFFECTS 4.2

5.0 REVIEW OF LICENSEE EVENT REPORTS FROM 1970 TO 1983 ..... 5.1

5.1 PIPING SYSTEMS 5.1

5.2 SNUBBER FAILURES 5.1

5.3 FAILURE MECHANISMS 5.2

5.4 STATISTICAL ANALYSES OF FAILURE DATA 5.10

6.0 PERSONNEL EXPOSURE TRENDS 6.1

7.0 COSTS AND VALUE-IMPACT 7.1

7.1 PRIOR VALUE-IMPACT STUDIES 7.1

7.2 VALUE-IMPACT ANALYSIS 7.4

7.2.1 Snubber Unit Costs 7.4

7.2.2 Reducing the Number of Snubbers 7.12

7.2.3 Increasing Snubber Reliability 7.14

8.0 IMPLICATIONS OF AGING AND DEGRADATION OF SNUBBERS 8.1

9.0 PHASE II STUDY 9.1

10.0 SUMMARY, CONCLUSIONS, AND RECOMMENDATIONS 10.1

11.0 BIBLIOGRAPHY 11.1

APPENDIX A - CONTENTS OF A FUNCTIONAL SPECIFICATION FOR SNUBBERS USED IN SYSTEMS IMPORTANT TO SAFETY A.1

APPENDIX B - QUALIFICATION OF FUNCTIONAL PARAMETERS FOR SNUBBERS USED IN SYSTEMS IMPORTANT TO SAFETY B.1

APPENDIX C - ACCEPTANCE TESTING CRITERIA FOR THE PRODUCTION OF SNUBBERS USED IN SYSTEMS IMPORTANT TO SAFETY C.1

APPENDIX D - WESTINGHOUSE STANDARDIZED TECHNICAL SPECIFICATIONS D.1

FIGURES

1.1 Snubber Reduction Procedure 1.4

2.1 Hydraulic Snubber Fully Extended Piston Rod 2.4

2.2 Reservoir of Hydraulic Snubber in Extended, Overextended, and Retracted Positions 2.4

2.3 Acceleration-Controlled Mechanical Snubber - High Pitch Lead Screw 2.6

2.4 Acceleration-Controlled Mechanical Snubber - Recirculating Ball Assembly 2.7

2.5 Velocity-Controlled Mechanical Snubbers 2.8

7.1 Sample Letter Sent to 62 Companies Requesting Snubber Information 7.6

10.1 Nuclear Plant Aging Research Program Strategy 10.2

TABLES

2.1 Subcomponents in Hydraulic Snubbers 2.10

2.2 Hydraulic Snubber Seals 2.11

2.3 Materials Used for Seals in Snubbers 2.11

2.4 Measurements to Characterize Seal Properties 2.12

3.1 Significant Functional Parameters Pertinent to Snubbers 3.12

3.2 Significant Functional Parameters Pertinent to Snubbers Cited in Draft Regulatory Guide 3.13

3.3 Common Causes for Degradation in Snubber Operating Characteristics 3.16

3.4 Types of Test Conditions 3.19

5.1 Snubber Failures from 1973 through 1983 ..... 5.2

5.2 Snubber Incidents by Plant and Year from LER Reviews 5.3

5.3 Failure Causes and Mechanisms for Hydraulic Snubbers 5.5

5.4 Failure Causes and Mechanisms for Predominately Mechanical Snubbers 5.6

5.5 Failure Causes and Mechanisms for Hydraulic and Mechanical Snubbers 5.7

5.6 Failure Modes and Causes for Surry Power Station Unit 1 Snubbers 5.11

5.7 Comparison of the Number of Incidents by Year for Three Data Sets 5.12

5.8 Comparison of Snubber Incidents by Plant for Three Data Sets 5.13

5.9 Failure Modes for Data Set A 5.15

5.10 Ultimate Failure Causes for Data Set A 5.15

5.11 Snubber Incidents by Plant and Year for Data Set A..... 5.16

5.12 Snubber Incidents by Plant and Year for Data Set B 5.18

5.13 Snubber Failures by Year and Snubber Type for Data Set A 5.19

5.14 Snubber Failures by Plant and Snubber Type for Data Set A 5.20

5.15 Proportion of Failed Snubbers in Operating Nuclear Power Plants for Data Set A 5.22

5.16 Snubber Failure Data by Plant for Data Set A 5.22

5.17 Snubber Failure Data by Failure Mode for Data Set A 5.23

5.18 Snubber Failure Data by Failure Cause for Data Set A 5.23

5.19 Number and Proportion of Snubber Failures by Manufacturer for Data Set A 5.24

5.20 Snubber Failure Data by Year for Data Set A, Assuming a Snubber Population 5.25

5.21 Snubber Failure Data by Plant for Data Set A, Assuming a Snubber Population 5.26

5.22 Snubber Failure Data by Failure Mode for Data Set A, Assuming a Snubber Population 5.28

5.23 Snubber Failure Data by Failure Cause for Data Set A, Assuming a Snubber Population 5.29

6.1 Personnel Exposure Data 6.1

6.2 Relevant Snubber Data in NUREG/CR-2136..... 6.2

6.3 Exposure Values Cited by Country for BWRs in Past 2 to 3 Years..... 6.4

7.1 Value-Impact Data for Snubbers 7.3

7.2 Snubber Manufacturers Responding to Request for Information..... 7.7

7.3 Manufacturer Data on Snubbers 7.8

7.4 Estimated Size Distribution of Snubbers 7.9

7.5 Summary of Snubber Costs Assuming a 40-Year Plant Life and Discount Rates of 2%, 5%, and 10% 7.11

7.6 Estimated Cost Savings Resulting from Reducing the Number of Snubbers in an Existing Plant 7.13

7.7 Average Total Sample Size for Specified Mean Failure Rates 7.14

7.8 Summary of Net Present Value of Snubber Costs for Various Mean Failure Rates 7.14

1.0 INTRODUCTION

The first light-water reactors (LWRs) used few, if any, mechanical or hydraulic snubbers or pipe whip restraints. Most LWR piping designs were similar to fossil plants, which have flexible piping systems. During the 1970s, an increasing concern was expressed by U.S. Atomic Energy Commission and U.S. Nuclear Regulatory Commission (NRC) regulatory personnel concerning the behavior of piping under severe seismic loads. Essentially concurrently, the large pipe break, originally proposed as a mechanism for sizing containments through back calculation of pressure loads, emerged as a design-basis accident. Appropriate measures were required to prevent pipe whip. A logical extension of the seismic and pipe break criteria was to consider that they occur essentially simultaneously.

The piping failure mode proposed for severe seismic loads was plastic collapse. Although this failure mode had not been confirmed experimentally and analytic validation was based on very conservative assumptions, it became accepted that plastic collapse would be the controlling pipe break mechanism. A natural consequence of this failure mode was a movement toward progressively stiffer piping systems to "prevent" plastic collapse.

Several assumptions made during seismic modeling further increased the total number of supports on a piping system. Examples include the manner of bounding the seismic spectrum; assumptions on combining loads; the handling of spectra broadening; and, in particular, the use of conservative values for seismic damping. These assumptions led to more and more supports and snubbers being added to piping systems. Nuclear plants in the near-term operating license stage may have more than 1000 snubbers; plants licensed during the 1970s may have an average of about 500 snubbers.

As more snubbers were used, several operating problems arose; for example, degradation and leaking of seals on hydraulic snubbers and functional failures of both hydraulic and mechanical snubbers. These problems led to increased qualification and testing requirements. Thus, the original cost of a snubber represents only a small fraction of the overall cost of qualification, installation, maintenance, and testing. In addition, maintenance and testing result in substantial radiation exposure in older plants.

Another problem that was not recognized initially was the limitation on in-service inspection (ISI) resulting from the large numbers of snubbers and supports that prevent access to many welds in piping systems. A further problem was the concern that stiff piping systems may be inherently more susceptible to overloading and possible failure than flexible systems. Obvious examples include improper snubber installation and premature activation, which can result in severe loads during heatup and cooldown. The possibility that

ratcheting may be a more probable failure mode than plastic collapse is another factor to be considered. In fact, it has been reported that a stiff piping system failed during an earthquake while a flexible system in the same plant did not.

As a result of the preceding concerns, Technical and Steering Committees on Piping were organized under the Pressure Vessel Research Committee (PVRC) with active industry and NRC participation. In the past two years, these groups have developed a more relaxed interim position on seismic damping, a modified and less conservative position on spectra broadening, and a document on industry practice related to design approaches leading to fewer snubbers. These positions have been accepted by the NRC on a case-by-case basis, and portions have been incorporated into Appendix N of ASME III (the reactor construction code). A task group on seismic design under an NRC Piping Review Committee has recommended that the case-by-case status be converted to generic positions. The NRC Executive Director for Operations has issued a directive to develop such generic positions as cited in NUREG-1061.

The implications of the preceding changes on a nuclear plant containing a large number of snubbers (for example, 500 to 1000) are dramatic. If a new design analysis is conducted, the number of supports could be reduced by 25% to 50%. These numbers have been confirmed by sensitivity studies conducted at Duke Power Co. and Lawrence Livermore National Laboratory (LLNL). Furthermore, if the design suggestions presented in the industry practice document are utilized, the number of remaining snubbers could be further reduced.

A recent document reports the results of the sensitivity tests using the PVRC-proposed damping values and spectra broadening.[a] Three piping systems were considered: auxiliary feedwater system (in part), reactor heat removal/safety injection system, and reactor coolant systems. The auxiliary feedwater system at the Zion 1 nuclear plant was modeled in depth. The original auxiliary feedwater system contained 25 vertical and horizontal supports or restraints and two snubbers. Using the PVRC damping values would permit removal of both snubbers and seven of the horizontal restraints, based on the analysis.

While snubbers can provide a valuable function where space is very restricted, they often have been used instead of conducting a more sophisticated analysis. Somewhat belatedly, the implications of excessive snubbers in terms of costs of original purchase, qualification, installation, maintenance,

---

(a) Chuang, T. Y., et al. 1984. Impact of Changes in Damping and Spectrum Peak Broadening on the Seismic Response of Piping Systems. NUREG/CR-3526, Lawrence Livermore National Laboratory, Livermore, California.

and testing (which requires removal and reinstallation) are being recognized. A further factor is the cumulative exposure incurred during the maintenance and testing stages.

At a recent conference, several papers were presented pertaining to the removal of snubbers using approaches such as that of T. Y. Chuang et al. One paper (Jimenez and Requena)[a] discussed a snubber optimization program based on analyzing stress and damage with a computer code. The reanalysis permitted removal of 95% of the snubbers and 25% of the supports from an intermediate energy line and 85% snubbers and 17% supports from a high energy line.

A Babcock and Wilcox study[b] used a multiple response spectra approach with 0.5% and 5% (PVRC) damping on a high-pressure spray line. The analytic approach reduced stresses by factors of 2 to 3 compared with an enveloped spectra. By evaluating primary and secondary stresses, the number of snubbers on the system was reduced from 15 to 3 with 3 snubbers replaced by link-bars.

An Impell study[c] made several suggestions, including a change in Equation 9 of ASME III. Figure 1.1, which was taken from this study,[c] illustrates the snubber reduction procedure that has many aspects in common with similar snubber reductions. Their best case--which combines PVRC damping, multiple level response spectra, peak shifting, direct generation of response spectra, and fracture mechanics to justify leak-before-break--reduced "snubbers on steam generator blowdown line to 1."

The PVRC actions cited in previous paragraphs have not been described in depth. The interested reader is referred to WRC Bulletin 300, which discusses positions concerning damping, spectral broadening, and industry practices. This information provides the basis for comments presented in later sections concerning reducing the number of snubbers.

(a) Jimenez, P., and A. Requena. 1985. "Snubber Optimization Program." Presented at ASME Pressure Vessel and Piping Conference, June 24-27, 1985, New Orleans, Louisiana.

(b) Tuttle, E. B., and A. D. DuBose. 1985. "Snubber Optimization Using Multiple Response Spectra and Increased Damping Techniques." Presented at ASME Pressure Vessel and Piping Conference, June 24-27, 1985, New Orleans, Louisiana.

(c) Eidinger, J., and G. Hau. 1985. "Snubber Reduction by Reduction of Unnecessary Seismic Margins." Presented at ASME Pressure Vessel and Piping Conference, June 24-27, 1985, New Orleans, Louisiana.

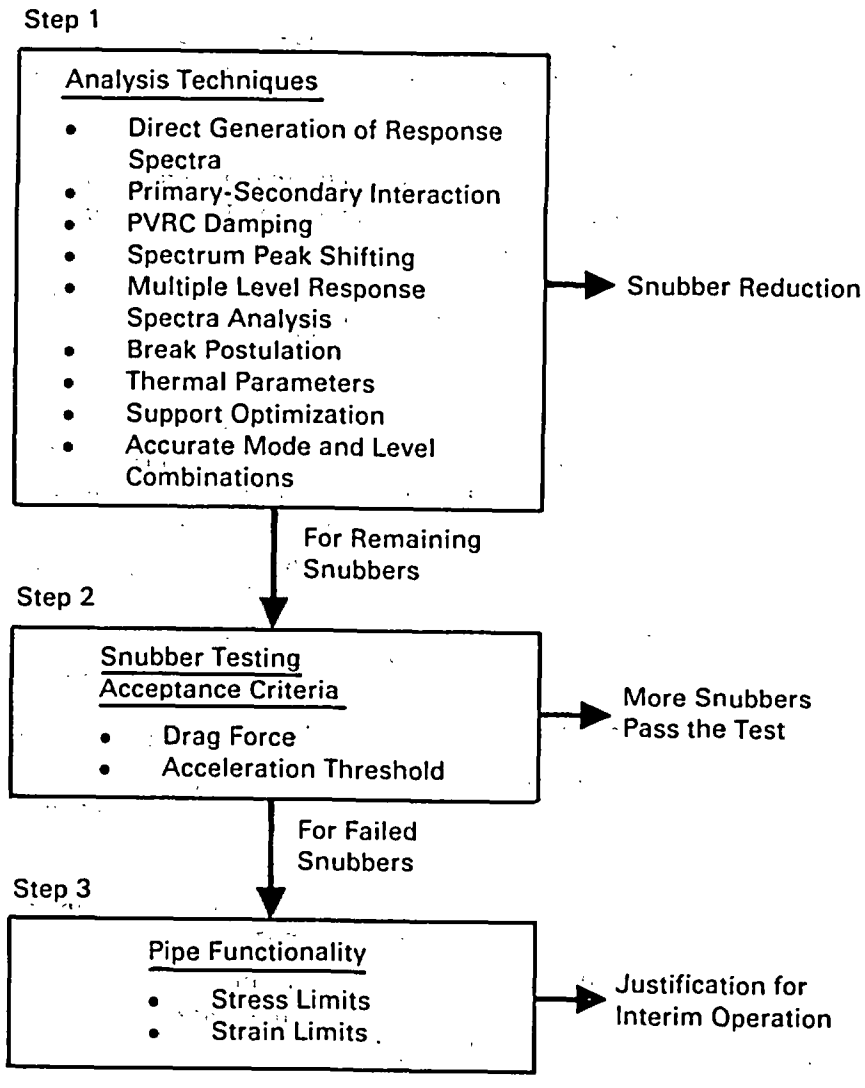

FIGURE 1.1. Snubber Reduction Procedure

While the purpose of this Pacific Northwest Laboratory (PNL)[a] review was to consider the implications of aging and service wear of snubbers, an essential lead-in is to establish the need for the large number of snubbers now in use, together with the implications of errors in design and installation. In this report, available data on snubber behavior and operating experience are reviewed, together with the current and proposed status of surveillance and testing. Failure modes and mechanisms are also reviewed to assess the overall contribution of aging in contrast to other failure modes.

(a) Operated for the U.S. Department of Energy (DOE) by Battelle Memorial Institute under Contract DE-AC06-76RLO 1830.

2.0 BACKGROUND INFORMATION

2.1 WHAT IS A SNUBBER?

If one queries an engineering-based computer information system, the word "snubber" somewhat surprisingly appears only when listed in titles or key words. It is not used as an entry term in the conventional thesauruses used to search the literature.

Snubbers of the type discussed in this report have two functions: 1) they should move freely at low accelerations and 2) they should lock up at higher accelerations. The valid use of snubbers is in locations of limited clearance and possible high thermal expansion. Unfortunately, designers have often specified snubbers instead of validating a method that could permit the use of conventional supports.

Snubbers are available in a wide range of sizes from very small units on smaller lines to units weighing thousands of pounds used on steam generators. Two types of snubbers are in use. The hydraulic type depends on the flow of a fluid through a valve or orifice until the valve closes or the flow is choked in the orifice. The mechanical type is a device where movement of a piston leads to rotation of a screw or a roller in a screw. Again, rapid movement results in activation.

While essentially all snubbers on LWR systems fall into the above categories, there are other snubber devices with no moving parts. Examples include massive blocks of an elastomeric material used to handle structural movement. Passive devices have been developed containing no moving parts that absorb high levels of energy if there is substantial piping displacement; however, these devices are not used commercially.

Recent emphasis on maximizing the reliability of piping systems, the escalating requirements for snubber ISI, and the field problems that some snubbers have recently exhibited have increased the importance of minimizing the number of dynamic load restraints. There are definite economic and reliability gains associated with limiting the use of these devices. The first and most obvious is the elimination of the cost of the hardware and its installation, particularly if the dynamic load restraint is a snubber. Because the snubber is a mechanical or hydraulic device, installation procedures must consider the impact on operability. Manipulation or handling of the device is more difficult than for a standard rigid-type support. That is, the installation must allow for travel of the piston, making it necessary to control end-to-end dimensions. Hydraulic snubbers must be installed with the reservoir in the proper position; and piston rods must be free of paint, nicks, and weld spatter. An additional and significant problem associated with snubbers is the

requirement for periodic inspection (usually visual). Present regulations for testing hydraulic snubbers require removing the device from its installed location, transporting it to a test fixture elsewhere in the plant, running the test, and (if acceptable) reinstalling it. The potential for damage to occur as a result of this additional handling is substantial if the snubber is removed. In situ testing is also an alternative under the regulations.

The functional test is only a small part of the overall cost. The greater economic impact is associated with the removal and subsequent reinstallation of the snubber, the radiation exposure of personnel, and the very real possibility of extended plant outages as statistical test sample sizes are increased due to test failures. It is, therefore, critical that the analyst recognize these factors and make every effort to specify as few dynamic load restraints that will satisfy pipe stress and equipment load criteria.

Qualitatively, reliability as related to snubbers is simple: a system without these devices is more reliable than a system with them. Anytime a mechanical or hydraulic device must be counted on to function, reliability is reduced. Nonetheless, it must be recognized that some snubbers are needed so that piping systems in confined spaces can be designed to be flexible enough to absorb thermal expansion loads and, at the same time, be rigid enough to withstand the dynamic loads imposed on them.

In summary:

- The snubber is a device that relies on mechanical or hydraulic mechanisms to function. It is expensive to purchase, critical to install, and requires inspection and testing for the life of the plant.

- Snubbers accommodate the dynamic loads imposed on the piping system while allowing for free thermal motion during normal operation. Without such devices, it would be difficult, if not impossible, to design for the myriad of both real and postulated loading events.

- Due to schedule pressures, the initial reaction is to develop a system geometry that provides thermal flexibility and then to use snubbers to accommodate the dynamic load events. However, additional time and effort on the part of the analyst could provide the same system protection while limiting the use of snubbers.

- Several organizations have reported that a typical 1100-MWe capacity boiling-water reactor (BWR) can have 9,000 to 10,000 supports on seismic Category I piping (as many as 800 spring hangers and 1500 snubbers). An 1100-MWe pressurized-water reactor (PWR) could have 7,000 to 10,000 supports (200 spring hangers and 950 snubbers).

- Engineering, fabrication, construction, and hardware costs will be lower with fewer supports; however, when the cost of items such as analysis, computer time, and reconciliation are considered, the cost difference in the two approaches may not be significant. The difference is heavily influenced by two factors: 1) the installed cost per support and 2) the total life (40 years) cost per support. The second factor refers to inspection and maintenance costs associated with snubbers--typically $5,000 to $10,000 per snubber on small-bore piping.

- The spring sway brace (a standard component support) should be considered for controlling vibration if high amplitudes are observed or expected. Snubbers are not recommended for controlling vibration.

- In the analysis process, supports and restraints are required to protect the system against various types of loading (from as simple as the weight of the piping to as complex as the dynamic loads associated with water/steam hammer). The selection of the type and location of supports and restraints controls a number of items other than the acceptability of the piping. For example, the use of snubbers has an impact on the inspection and examination requirements for the life of the plant.

2.2 TYPES OF SNUBBERS

The two basic types of snubbers are hydraulic and mechanical. The hydraulic snubber consists of a double-acting cylinder, a flow control device, and, in most cases, a hydraulic fluid reservoir (Figure 2.1). The reservoir of a hydraulic snubber in the extended, overextended, and retracted positions is shown in Figure 2.2. An alternative to the external reservoir-type snubber is one using an orifice with high fluid resistance within the piston where fluid does not pass through external hydraulic controls or reservoirs. This design is simpler and more compactly constructed than the design with external reservoirs.

In the inactive mode, free thermal expansion occurs by the passage of hydraulic fluid from one side of the piston to the other. In the activated mode, flow of fluid is restricted, thus limiting piston motion. Release rate velocities after activation of hydraulic snubbers are controlled by bypass circuits or through inherent leakage in the flow control device. An external reservoir serves a variety of purposes such as accommodating the thermal expansion of the fluid and volumetric changes during snubber motion and providing reserve fluid.

When applied to the snubber piston, any load from the pipe or other component will cause fluid to flow through the control device. These pistons may

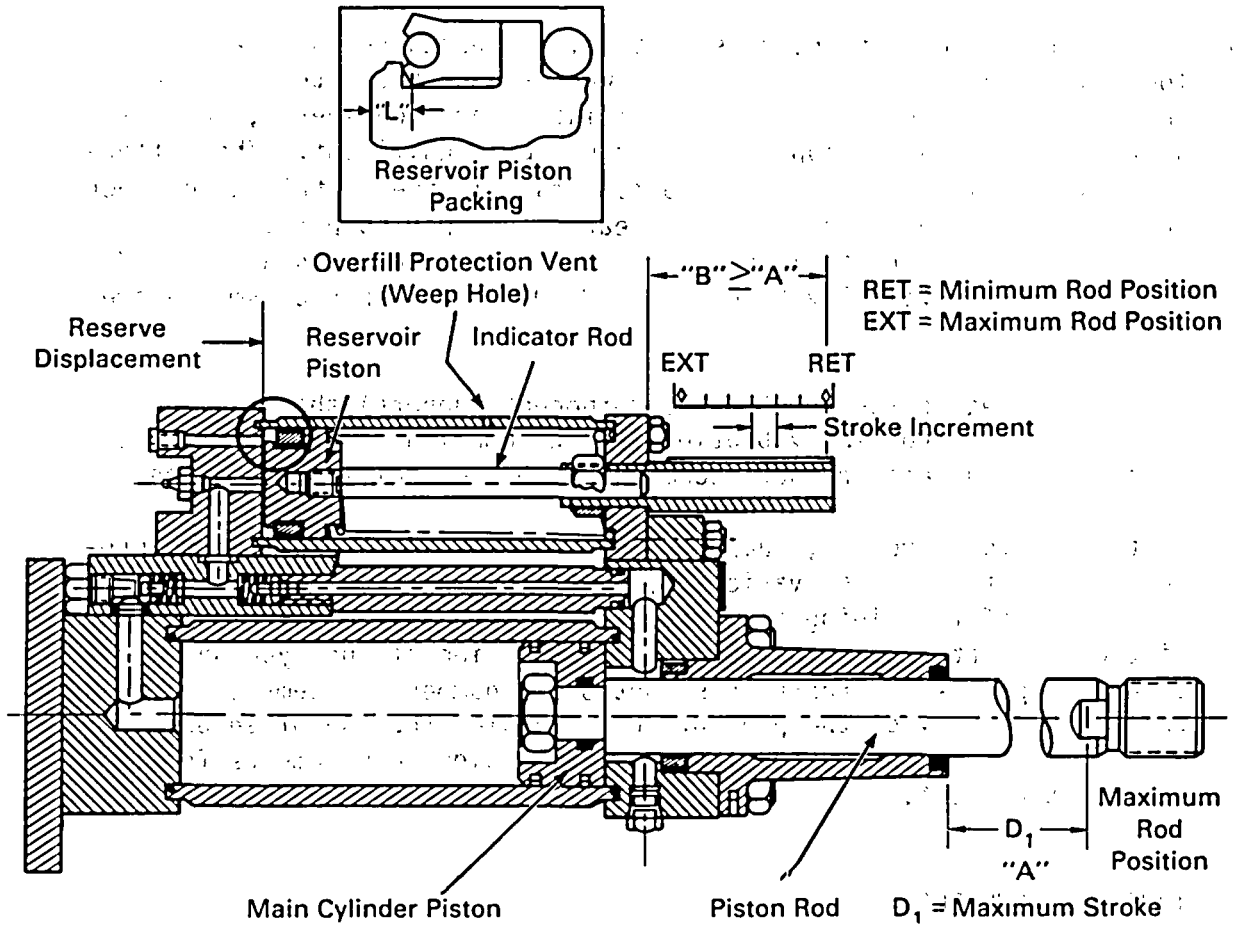

FIGURE 2.1. Hydraulic Snubber Fully Extended Piston Rod

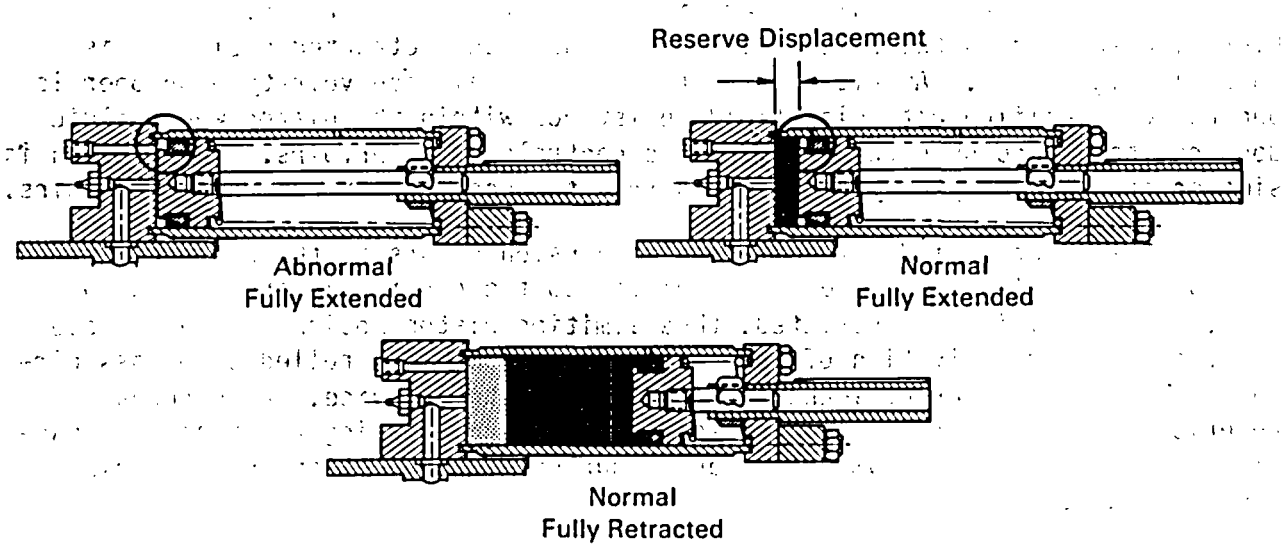

FIGURE 2.2. Reservoir of Hydraulic Snubber in Extended, Overextended, and Retracted Positions

be either single-ended or double-ended. While the single-ended design is more compact, it requires more careful bearing and seal design; and these components have often been a source of problems. Also, the relative behavior in tension may differ from that under compression. The obvious advantages of the double-ended design include more stable bearing and seal loads. A disadvantage is that the overall assembly will be longer.

Hydraulic snubbers are velocity controlled. Acceleration control is more common in mechanical snubbers. Figures 2.3 and 2.4 illustrate the more usual mechanical snubber. Mechanical snubbers usually consist of a motion-sensing device, an activating rod, and a braking mechanism. Braking devices may be included to limit motions of the movable rod end. Such snubbers are activated by 1) a progressive increase in load (force) with the increase of rod motions through a gear mechanical escapement or 2) a braking action applied on a rotating mass threaded to the active rod. Alternative approaches employ friction, wedging, or spring action for activation.

The snubber illustrated in Figure 2.3 utilizes a brake on a rotating mass and has a motion sensor that responds to changes in the rate of angular rotation of the mass. Application of a dynamic force or displacement activates an internal brake or clutch and "locks" the snubber. Figure 2.4 illustrates a snubber that uses a recirculating ball assembly to convert the linear motion of the piston rod to rotation in the braking mechanism.

An alternative to the acceleration-controlled mechanical snubber is one that is velocity controlled (Figure 2.5). Displacement occurs at a specified constant velocity and activation occurs at higher values. An oscillating verge (specially shaped cam) with connecting gearing limits the velocity of the gear rack, thus controlling the rate of linear displacement of piping or components. During normal thermal transients, the rack is free to displace with relatively small resistance; however, a dynamic load results in oscillation of the verge, which limits movement of the gear track to a velocity proportional to the applied load. On-line experience with this specific type of snubber appears to be limited.

2.3 FUNCTIONAL REQUIREMENTS

Snubbers, whether hydraulic or mechanical, have two principal purposes: 1) they should move freely to accommodate thermal movement of piping and 2) they should lock up if piping or components are subjected to rapid movement and high amplitudes caused by a seismic event or dynamic loads such as water hammer. The handling of dynamic loads at accelerations and magnitudes greater

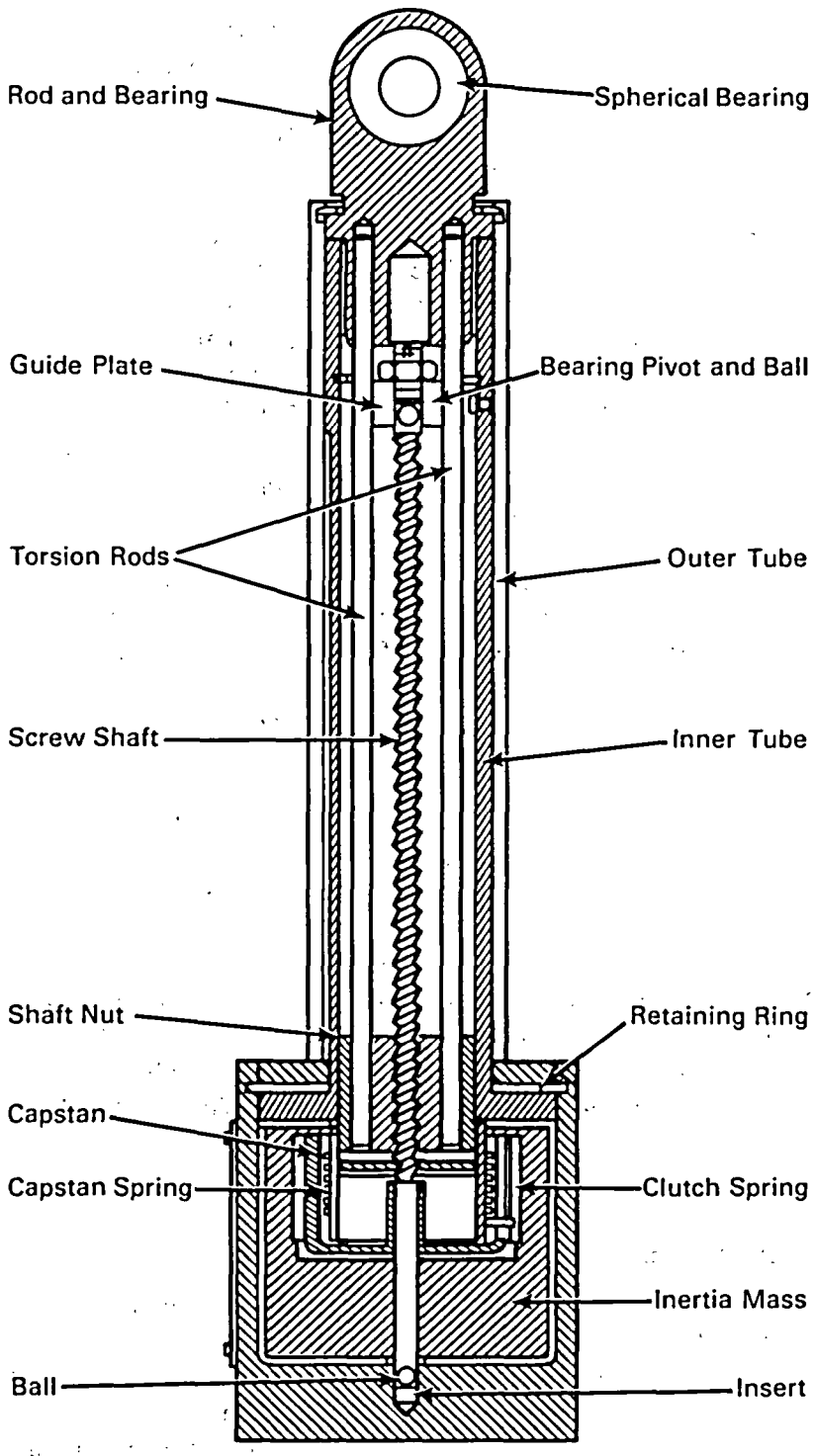

FIGURE 2.3. Acceleration-Controlled Mechanical Snubber - High Pitch Lead Screw

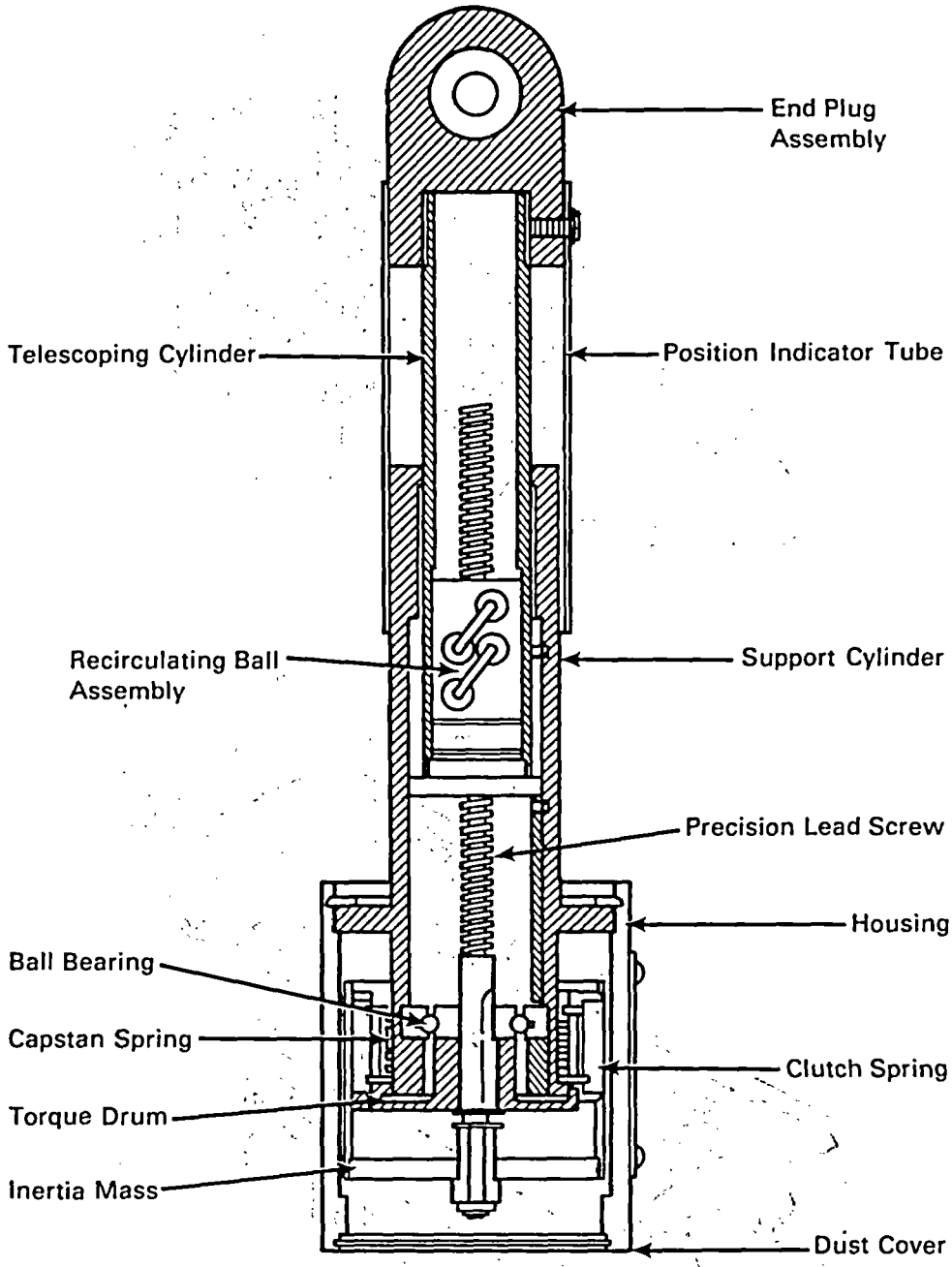

FIGURE 2.4. Acceleration-Controlled Mechanical Snubber - Recirculating Ball Assembly

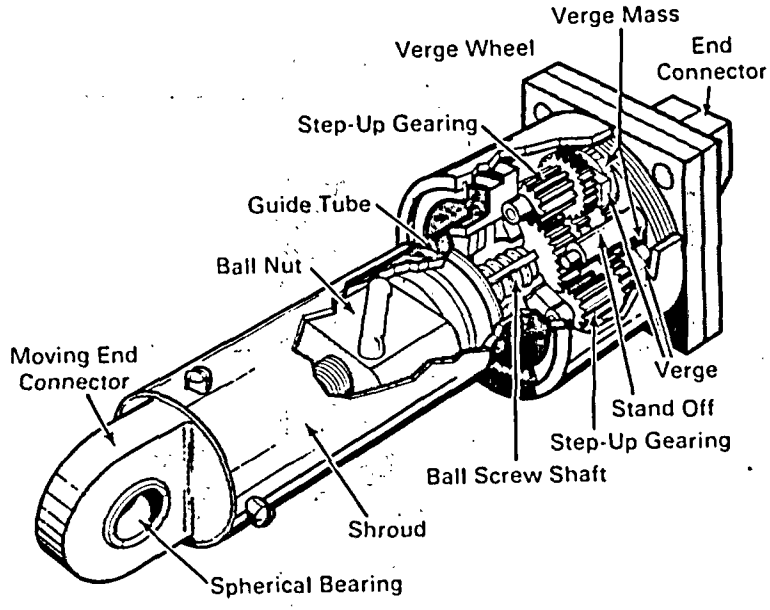

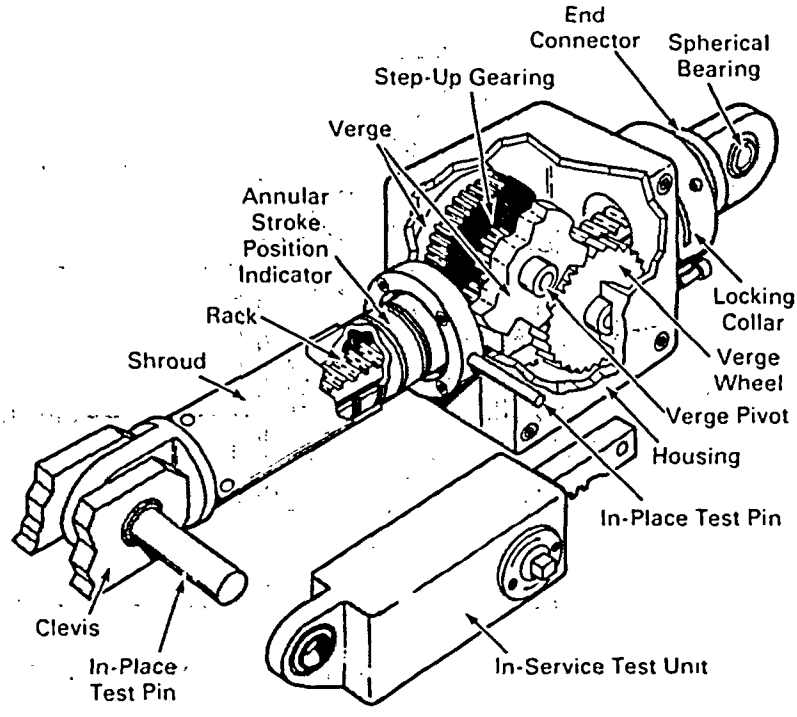

FIGURE 2.5. Velocity-Controlled Mechanical Snubbers

than those typically generated by seismic events is desired but may not be met because of damage to the snubbers, particularly the mechanical type. There have been several instances where severe snubber damage and lockup occurred on a system exposed to a water hammer.

These functional requirements are based on a premise that may not be valid; namely, that piping will fail in a collapsing mode when exposed to dynamic seismic loads. Actual experience in piping systems under seismic loads has not confirmed such a failure mechanism. In fact, there have been very few piping failures during seismic events, and these failures have usually occurred because the piping was tied to a structure that failed. The general failure mechanism has been challenged and there may be a movement to return to a degree to the flexible systems typical of fossil fuel plants and early nuclear power plants. An extreme case might be the reanalysis of piping systems followed by the removal of a substantial number of snubbers.

2.4 MATERIALS AND CONSTRUCTION

Although hydraulic and mechanical snubbers are relatively complex mechanisms, the materials used are not exotic. The critical component in the hydraulic snubber is the plastic seal. The current material is a polyethylene that has proved satisfactory.

Tables 2.1 through 2.4 present information on the various components of hydraulic snubbers. Various control mechanisms, reservoirs, cylinders, and seal materials are used (Table 2.1). Tables 2.2 and 2.3 illustrate where seal materials are used and their associated problems and limitations. Table 2.4 lists measurements that are used to characterize seal properties. Seal materials are subject to the following problems and should be selected carefully:

- extrusion (minimize with backup rings)
- nibbling, wear, embrittlement, or roll
- installation error
- poor manufactured finish or improper groove depth (manufacturing error)
- design/application problems: fluid incompatibility; temperature incompatibility; radiation incompatibility; steam/moisture incompatibility; vibration.

TABLE 2.1. Subcomponents in Hydraulic Snubbers

Item	Equipment	Piping
Control Valve:		
Activation/bleed	a,b,c,d,e,f	a,b,g,h
Bleed orifice in poppet	--	--
Fixed orifice	--	c
Temperature compensating	i	--
Reservoir:		
Nonpressurized (vented)	b	b,h
Pressurized	a,c	a,c,g
Remote	i	--
None		
Cylinders:		
Single-ended piston rod	a,b,c,f	a,b,h
Double-ended piston rod	d,e,i	a,c
Tie rod	--	--
Screwed end	--	--
Seal Locations:		
Piston rod		
Rod wiper		
Cylinder end		
Piston		
Valves		
Reservoir		
Fill plugs		
Seals:		
Viton	d,e	--
Special	i	--
Polypak (EP)	a	a
Tee (EP)	--	g
EP	b,f	b,h
Tefzel	c	c
Metallic	c	c

(a) Bergen-Paterson Pipe Support Corp.
(b) ITT-Grinnell Corp.
(c) Paul-Munroe Energy Products
(d) Milwaukee
(e) Anchor-Holth
(f) Rexnord
(g) EP Systems
(h) Basic Engineering
(i) Taylor Devices

TABLE 2.2. Hydraulic Snubber Seals

Item/Factor	Location: Piston	Rod	Reservoir Plunger	Rod Wiper	Cylinder End	Plugs/ Valves	Threaded Seals
Loading: Dynamic	X	X	X	X			
Static					X	X	X
Seal Packing Material/Type:							
Polypak (EP)[a]	X	X	X				
Miller		X		X			
Vee (Chevron)		X					
O-ring							
Tee	X	X					
U-cup	X						
Gasket			X				
Tefzel	X	X			X		

(a) Ethylene propylene.

TABLE 2.3 Materials Used for Seals in Snubbers

Material	Advantages	Disadvantages
Elastomers: Polyurethane		Poor silicone fluid compatibility.
Nitrile rubber (Buna-N)		Poor elevated temperature properties.
Viton (fluoro-elastomer)	Good elevated temperature properties. Resists aging.	Poor steam resistances. Moderate radiation resistance.
Ethylene propylene (EP, EPDM)	Good radiation resistance. Good fluid compatibility.	Poor resistance to petroleum solvents. Moderate temperature aging resistance.
Thermoplastics: Tefzel		Inelastic; springs required.
Metallics: O-rings		Limited springback.

TABLE 2.4. Measurements to Characterize Seal Properties

Property	Measurement
Hardness	Extrusion resistance (typically 70 to 90 Durometer)
Tensile strength[a]	Embrittlement
Elongation[a]	Typically 300% elongation at 2000 psi
Modulus: tensile compression	Modulus of elasticity
Compression set	Low pressure sealing force; constant stress (400 psi at 150°F for 30 min); constant strain environment for environmental effects

(a) At room temperature.

2.5 SNUBBER LOCATIONS

Snubber locations vary substantially with the age of the plant. Typically snubbers are used on large components such as steam generators, valves, pumps, and pressurizers and on safety-related piping systems. Unrealistic design approaches have resulted in snubbers being used to control vibration, which is a poor practice. Snubbers have been located at artificial benchmarks resulting from computer analysis and boundary limits set by the computer. Modifications in seismic spectra criteria have greatly increased the numbers of snubbers to where they may be located 10 to 20 ft apart on piping systems. This practice is an outgrowth of the concept that a stiff piping system will not fail where a flexible system will. Many snubbers are virtually inaccessible; they may be high above floor level or within a maze of piping. Snubbers are distributed throughout a plant on Class 1, 2, or 3 piping systems. There are no definitive ground rules that permit the prediction of where snubbers will be in a specific plant.

3.0 TECHNICAL SPECIFICATION REQUIREMENTS INCLUDING REVIEW OF RELEVANT STANDARDS AND GUIDES

Snubber testing can be divided into three categories: 1) qualification testing, 2) acceptance testing, and 3) preservice and in-service testing. These three categories have been dealt with to a greater or lesser degree in a spectrum of documents.

Qualification testing is performed on a sample of snubber units of each size, type, and manufacturer to demonstrate compliance with design requirements. The draft Regulatory Guide Qualification and Acceptance Tests for Snubbers Used in Systems Important to Safety deals primarily with qualification testing, acceptance testing, and functional specification.[a] The contents of this guide will be discussed more extensively later in this section; and Appendices A, B, and C of the draft guide are attached to this report.

Acceptance testing is briefly discussed in ASME PVP-45.[b] However, no other source with the exception of the draft Regulatory Guide covers acceptance testing. Preservice and in-service testing has been addressed in ASME XI and ANSI/ASME OM4.[c] Plant-specific or standardized technical specifications also deal explicitly with this area.

The design criteria for snubbers were reviewed to determine what they need to provide and to use these criteria as benchmarks to measure the adequacy of qualification, acceptance, or in-service testing. Obvious sources of information were ASME III, Section NF, and the NRC Standard Review Plan, Section 3.9.3.[d]

(a) U.S. Nuclear Regulatory Commission. February 1981. Qualification and Acceptance Tests for Snubbers Used in Systems Important to Safety. Draft Regulatory Guide SC 708-4, Rev. 1, Washington, D.C.

(b) American Society of Mechanical Engineers. 1980. Criteria for Nuclear Safety Related Piping and Component Support Snubbers. PVP-45, presented at the Pressure Vessel and Piping Conference, ASME Century 2 - Emerging Technology Conferences, San Francisco, California.

(c) American Society of Mechanical Engineers. 1982. Examination and Performance Testing of Nuclear Power Plant Dynamic Restraints (Snubbers). ANSI/ASME OM4, New York.

(d) U.S. Nuclear Regulatory Commission. July 1981. USNRC Standard Review Plan for 3.9.3, ASME Code Class 1, 2, and 3 Components, Component Supports, and Core Support Structures. NUREG-0800, Washington, D.C.

3.1 SNUBBER DESIGN CRITERIA

Section NF-3000 of ASME III covers design rules for supports. Specifically, NF-3411.3 covers concurrently acting loads stipulated in the design specifications. For example:

- transmitted loads including dynamic loadings
- structural interaction of intervening element with the component and component supports
- support load path material requirements
- temperature effects or other environmental effects
- design, fabrication, examination, testing, and installation requirements
- documentation requirements
- connecting requirements of intervening element to building structure.

Section NF-3411.3 (c) gives explicit instructions for snubbers; namely, that they must meet:

(1) the following occasional loads

(a) seismic inertia

(b) seismic anchor displacement

(c) hydraulic transient loads resulting from but not limited to water hammer, steam hammer, pump startup, pump shutdown, safety and safety relief valve discharges as specified in the design operations

(2) thermal expansion and thermal anchor displacement - The snubber shall not resist the effects of thermal growth of the component, the piping system, and the anchorage to the degree where it imposes a significant load or stress on the piping or component.

Section NF-3412.4 deals explicitly with snubbers. In addition to the design loadings cited previously, the design specification should contain as a minimum:

(1) the required force, time, and displacement relationships

(2) the environmental conditions that the snubbers will be exposed to such as temperature, irradiation, corrosive atmosphere, moisture, and airborne particles

(3) consideration of material characteristics, such as compatibility, stability, fire resistance, wear, and aging

(4) tests that are required prior to installation; design of functional members such as interconnections, tubing and fittings, reservoirs, and flow distributors shall consider the effect of internal pressure, thermal expansion, and vibration loading.

Section 3.9.3 of the NRC Standard Review Plan cites the criteria applied by the NRC for snubbers. Subsection II.3b 1-7 deals specifically with snubbers; that section is quoted below:

(b) Where snubbers are utilized as supports for safety-related systems and components, acceptable criteria for snubber operability assurance should contain the following elements:

(1) <u>Structural Analysis and Systems Evaluation</u>

Systems and components which utilize snubbers as shock and vibration arrestors must be analyzed to ascertain the interaction of such devices with the systems and components to which they are attached. Snubbers may be used as shock and vibration arrestors and in some instances as dual purpose snubbers. When used as a vibration arrestor or dual purpose snubbers, fatigue strength must be considered. Important factors in the fatigue evaluation include: (i) unsupported system component movement or amplitude, (ii) force imparted to snubber and corresponding reaction on system or component due to restricting motion (damped amplitude), (iii) vibration frequency or number of lead cycles, and (iv) verification of system or component and snubber fatigue strength.

Snubbers used as shock arrestors do not require fatigue evaluation if it can be demonstrated that (i) the number of load cycles which the snubber will experience during normal plant operating conditions is small (<2500) or (ii) motion during normal plant operating conditions does not exceed snubber dead band.

Snubbers utilized in systems or components which may experience high thermal growth rates either during normal operating conditions or as a result of anticipated transients should be checked to assure that such thermal growth rates do not exceed the snubber lock-up velocity.

(2) Characterization of Mechanical Properties

A most important aspect of the structural analysis is realistic characterization of snubber mechanical properties (i.e., spring rates) in the analytical model. Since the "effective" stiffness of a snubber is generally greater than that for the snubber support assembly (i.e., the snubber plus clamp, transition tube extension, back-up support structure, etc.) the snubber response characteristics may be "washed out" by the added flexibility in the support structure. The combined effective stiffness of the snubber and support assembly must, therefore, be considered in evaluating the structural response of the system or component.

Snubber spring rate should be determined independent of clearance/lost motion, activation level, or release rate. The stiffness should be based on structural and hydraulic compliance only, and should consider the effects of temperature.

The snubber end fitting clearance and lost motion must be minimized and should be considered when calculating snubber reaction loads and stress which are based on a linear analysis of the system or component. This is especially important in multiple snubber applications where mismatch of end fitting clearance has a greater effect on the load sharing of these snubbers than does the mismatch of activation level or release rate. Equal load sharing of multiple snubber supports should not be assumed if mismatches in end fitting clearance exist.

(3) Design Specifications

The required structural and mechanical performance of snubbers is determined from the user's system analysis described in (1) and (2). The snubber Design Specification is the instrument provided by the purchaser to the supplier to assure that the requirements are met. The Design Specification should contain (i) the general functional requirements, (ii) operating environment, (iii) applicable codes and standards, (iv) materials of construction and standards for hydraulic fluids and lubricants,

(v) environmental, structural, and performance design verification tests, (vi) production unit functional verification tests and certification, (vii) packaging, shipping, handling, and storage requirements, and (viii) description of provisions for attachments and installation.

In addition, the snubber manufacturer should be requested to submit his quality assurance and assembly quality control procedures for review and acceptance by the purchaser.

(4) Installation and Operability Verification

Assurance that all snubbers are properly installed prior to preoperational piping vibration and plant startup tests should be provided. Visual observation of piping systems and measurement of thermal movements during plant start-up tests could verify that snubbers are operable (not locked up). Provisions for such examinations and measurements should be discussed in the piping preoperational vibration and plant startup test programs as described in SRP Section 3.9.2.

(5) Use of Additional Snubbers

Snubbers could in some instances be installed during or after plant construction which may not have been included in the design analysis. This could occur as a result of unanticipated piping vibration as discussed in SRP Section 3.9.2 or interference problems during construction. The effects of such installation should be fully evaluated and documented to demonstrate that normal plant operations and safety are not diminished.

(6) Inspection and Testing

In-service inspection and testing are critical elements of operability assurance programs for mechanical components. The applicant should provide a discussion of accessibility provisions for maintenance, in-service inspection and testing, and possible repair or replacement of snubbers consistent with the requirements of the NRC Standard Technical Specifications.

(7) Classification and Identification

All safety-related components which utilize snubbers in their support systems should be identified and tabulated in the FSAR. The tabulation should include the following information:

(i) identification of the systems and components in those systems which utilize snubbers, (ii) the number of snubbers utilized in each system and on components in that system, (iii) the type(s) of snubber (hydraulic or mechanical) and the corresponding supplier identified, (iv) specify whether the snubber was constructed to the rules of ASME Code Section III, Subsection NF, (v) state whether the snubber is used as a shock, vibration, or dual purpose snubber, and (vi) for snubbers identified as either dual purpose or vibration arrestor type, indicate if both snubber and component were evaluated for fatigue strength.

In addition, Subsection III.3 touches on operability, namely:

The reviewer should be assured that the applicant's PSAR contains discussions and commitments to develop and utilize a snubber operability assurance program containing the elements specified in paragraphs (1) through (6) of subsection II.3.b of the SRP section. A commitment to provide in the FSAR the information specified in paragraph 71 of subsection II.3.b of this SRP section is sufficient for the CP review stage. During the Operating License review the FSAR should contain summaries in sufficient detail to verify the PSAR commitments.

The preceding quoted material states rather explicit criteria to be met; however, snubbers often do not meet the cited criteria. For example, many mechanical snubbers fail to handle vibrations or severe dynamic loads such as water hammer. (Tables 5.4 and 5.5 in Section 5 present data on dynamic loads. Extensive work related to the Fast Flux Test Facility has established mechanical snubber degradation because of vibrations.)

3.2 QUALIFICATION VERSUS ACCEPTANCE TESTING

The draft Regulatory Guide and ASME PVP-45 deal with qualification testing, and the same requirements can be applied to acceptance testing. In addition, DOE internal standard NE E7-9T[a] leans heavily on the draft Regulatory Guide. The draft Regulatory Guide recommends that six functional parameters used in the design of systems be measured:

- activation level :- The axial velocity or acceleration that causes the snubber to convert to the restraint mode.

(a) U.S. Department of Energy. September 1984. Mechanical and Hydraulic Snubbers for Nuclear Applications. NE E7-9T, Washington, D.C.

- breakaway force - The minimum applied force required to begin extension or retraction of the snubber.

- dead band - The free (or nearly free) axial movement of the snubber between the two activations of opposite directions. This is considered to include the effects of clearance at the snubber and connections as well as effects internal to the snubber design.

- drag force - The force required to maintain snubber movement at a specified constant velocity prior to activation.

- release rate - The axial velocity or acceleration of snubber movement under a specific load after activation.

- spring rate - A linear approximation of the force-displacement relationship.

The regulatory position in the draft Regulatory Guide recommends the following:

- a functional specification in conformance to Appendix A of the draft Regulatory Guide

- construction to ASME III, Section NF

- establishment of the compatibility of material not covered in Section NF (for example, seals, lubricant)

- designs should consider the recommendations of Appendix B of the draft Regulatory Guide

- All snubbers should be accepted from the production line only after meeting Appendix C requirements.

Meeting the requirements of Appendices A, B, and C also assures that both qualification and acceptance requirements will be met. Because of their importance, Appendices A, B, and C of the draft Regulatory Guide are attached to this report.

Qualification testing as cited in the draft Regulatory Guide is discussed in a number of papers in ASME PVP-42.[a] A variety of qualification tests are discussed; some are comparable to the draft Regulatory Guide.

ASME PVP-45 covers much of same material as ASME III, Section NF, and the draft Regulatory Guide. The design criteria are cited, and several possible or suggested criteria dealing with snubber installation and testing are discussed. The document covers ISI as well. Appendix A of ASME PVP-45 covers the parameters to be considered in a snubber design specification; these parameters are discussed in substantially greater detail than in ASME III, Section NF.

3.3 TECHNICAL SPECIFICATIONS

The time period of this report is a time of transition for technical specifications. There is a conscious effort by the NRC to achieve uniformity by removing the differences that exist from plant to plant. For example, Generic Letter 84-13[b] provides a suggested format for 3/4.7.9 snubbers. Newer technical specifications (both plant-specific and standardized) follow the suggested format closely; Palo Verde and Westinghouse's standardized technical specifications are cited in the references. The Westinghouse specifications are shown in Appendix D.

Section 4.7.9(b) provides the following criteria for modifying the inspection period as a function of the number of inoperable snubbers detected during the usual inspections:

(a) American Society of Mechanical Engineers. 1980. Component Support Snubbers - Design, Application and Testing. PVP-42, presented at the Pressure Vessel and Piping Conference, ASME Century 2 - Emerging Technology Conference, San Francisco, California.

(b) U.S. Nuclear Regulatory Commission. May 3, 1984. Technical Specifications for Snubbers. Generic Letter 84-13.

No. of Inoperable Snubbers of Each Type (on any system) per Inspection Period	Subsequent Usual Inspection Period[a]
0	18 months ±25%
1	12 months ±25%
2	6 months ±25%
3, 4	124 days ±25%
5, 6, 7	62 days ±25%
8 or more	31 days ±25%

(a) The inspection interval for each type of snubber (on a given system) shall not be lengthened more than one step at a time unless a generic problem has been identified and corrected; in that event, the inspection interval may be lengthened one step the first time and two steps thereafter if no inoperable snubbers of that type are found (on that system).

The technical specification establishes visual inspection criteria requirements after potentially damaging transients and explicit requirements for functional tests. These inspections are conducted at 18-month intervals (see Appendix D for sample size options). Both failure and acceptance criteria are included.

The technical specifications in Appendix D under "Functional Test Acceptance Criteria" and "Snubber Service Life Program" are similar to the next section on in-service testing. The first cites activation, bleed, or release rates and force to initiate or maintain motion (for mechanical snubbers), all within a given range under tension and compression. For snubbers that are not required to displace under continuous load, the ability to withstand load without displacement must be established.

With regard to snubber seals, their service life is to be monitored to ensure that they do not exceed the permissible limits between surveillance inspections. They should be replaced if the limits will be exceeded. The same is true for springs, etc.

In October 1984, Region II cited inconsistencies in snubber technical specifications from plant to plant and recommended changes. Generally, the recommendations would upgrade requirements on older plants. Perhaps the most significant change was the recognition of the effect of visually testing plants with many snubbers (1000 to 2000) versus plants with few (50 to 100) snubbers. The probability of detecting one or more inoperable snubbers in a 10% sample of many versus few snubbers is obvious (for example, in the case of loss of hydraulic fluid). A shift from absolute numbers to a percentage of the total

was recommended. Another option was to retain the numbers as an incentive for utilities to reduce the number of installed snubbers.

3.4 CURRENT PRESERVICE AND IN-SERVICE TESTING REQUIREMENTS IN RELEVANT CODE/REGULATORY DOCUMENTS

The "official" testing document is ASME XI. In addition, there are ASME OM documents. Section IWF of ASME XI covers supports in general, including snubbers. Pertinent information is in IWF-2430 (c) and (d), which require that hydraulic snubber fluid reservoirs be refilled if they are out-of-specification. Section (d) requires readjustment of hot settings if out-of-specification. Table IWF-2500-1, Section F 3.50, cites visual VT-4 for snubbers as well as examination requirements, acceptance standards, extent of examination, and frequency of examination.

Section IWF-5000 relates directly to the testing of snubbers. Currently, only snubbers less than 50 kips in size are covered in IWF-5400. Sections IWF-5400 and IWF-5500 are repeated below:

IWF-5400 In-Service Tests for Snubbers Less Than 50 kips

(a) In-service tests shall be performed either during normal system operation or plant outages.

(b) A representative sample[a] of 10% of the total number of nonexempt (IWF-1230) snubbers whose load rating is less than 50 kips shall be tested each inspection period. Each representative sample shall consist of previously untested snubbers. After all nonexempt snubbers in the plant have been tested, the tests shall be repeated taking the same snubbers (or their replacements) in the same sequence as in the original tests. These tests shall verify that:

(1) during low velocity displacements, the specified maximum drag or free movement force will initiate motion of the snubber rod in both tension and compression;

(2) activation (restraining action) is achieved within the specified range of velocity or acceleration in both tension and compression;

(a) A representative sample shall include snubbers from various locations, taking into consideration service and environment.

(3) snubber bleed, or release rate, where required, is within the specified range in compression or tension. For units specifically required not to displace under continuous load, the ability of the snubber to withstand load without displacement shall be demonstrated.

(c) Snubbers that fail the in-service tests of (b) above shall be repaired in accordance with IWF-4000 and retested. An additional sample of 10% of the total number of snubbers shall also be tested at that time. Additional sample testing shall be continued until all units within the samples have met the requirements of (b) above.

(d) Components whose supports fail the test requirement of (b) (1) above shall be evaluated to ensure that the supported component has not been impaired.

(e) Inspection and test results shall be recorded for each snubber.

IWF-5500 Successive Testing

Any snubber that fails an in-service test of IWF-5400 shall be retested during the next test period.

ANSI/ASME OM4 expands substantially on the ASME XI requirements in terms of degree of detail for both visual examination and testing. Similar items in ASME XI and ANSI/ASME OM4 are compared in Table 3.1. Although the draft Regulatory Guide on snubbers is a qualification/acceptance document, it covers various testing criteria relevant to ISI. These criteria are summarized in Table 3.2.

3.5 EXISTING AND POTENTIAL TESTING PROBLEMS

There is evidence that so-called inoperable or out-of-specification snubbers, based on bench testing, are often operable. Studies at Peach Bottom with hydraulic snubbers indicated failure to meet activation and bleed velocity set points.[a] However, these failures were due to the inability of the test operator to accurately determine the maximum values during bench testing because of

(a) Kohler, E. G., J. J. Smerke, III, and H. F. Dobson. 1983. "Peach Bottom Atomic Power Station Hydraulic Snubber Failures." ANS Trans. 45:565.

TABLE 3.1. Significant Functional Parameters Pertinent to Snubbers (ANSI/ASME OM4 and ASME XI)[a]

Inspection	ANSI/ASME OM4 Preservice	ANSI/ASME OM4 In-Service	ASME XI
Breakaway force	X	X	
Drag force	X	X	X
Velocity/acceleration range for activation in tension or compression	X	X	X
Release rate within specified tension or compression	X	X	X
Visual		X	
Can carry load		X	
Does not restrict thermal movement		X	
Fluid level/hydraulic		X	
Visual examination sample size		100% initial, reduced to no lower than 10%	
Operability	X		
Frequency		18 months >25%	
Sample		10% or 35 (whichever is less)	X
Failed test		50% of original sample added	

(a) A revision of ANSI/ASME OM4 is currently being drafted.

rapid changes in the readings. Substitution of a peak holding velocity indicator that retained the maximum reading led to decreased rejection rates.

Studies at Pacific Scientific [b,c] confirm that there are substantial differences in test equipment and test procedures, both of which can indicate

(b) Pacific Scientific. August 1984. Data Report 1700, Anaheim, California.
(c) Pacific Scientific. 1984. A Simulated 40-Year Service Life Test for a PSA-3 Shock Arrestor with 2% to 3% Friction. Test Report 871, Anaheim, California.

TABLE 3.2. Significant Functional Parameters Pertinent to Snubbers Cited in Draft Regulatory Guide

Parameter	Value
Breakaway force and drag force for range of piston velocities and strokes	Limits specified
Dead band for range of working loads and piston locations	Limits specified
Activation level, or for snubber design without distinct activation level, limits for force motion behavior	Test both directions
Release rate for range of working loads	5%, 10%, 25%, 50%, 100% rated and emergency loads
Spring rates for range of working loads and piston locations	By dynamic cyclic loading equal to rated load, 1/4, 1/2, 3/4 stroke locations
Above room or design temperature, whichever is lower	Testing frequency of 3 to 33 Hz for at least 10 s

that snubbers are out of specification when they are not. The reverse is acceptance of out-of-specification snubbers. Specific concerns include accurate measurement of drag force and acceleration level, both of which are difficult to determine. Pacific Scientific has suggested specific procedures.

3.6 SUGGESTED CHANGES IN SNUBBER TESTING AND EXAMINATION PROCEDURES

The following criteria or modifications to criteria were culled from several sources. It is assumed that:

- The snubbers meet ASME III nondestructive examination (NDE) requirements.
- A functional specification was developed in conformance with Appendix A of the draft Regulatory Guide.
- The snubbers have been qualified to Appendix B of the draft Regulatory Guide, including environmental qualification.
- All snubbers are accepted from the production line only after meeting the requirements of Appendix C of the draft Regulatory Guide.

Tests to establish compliance with the draft Regulatory Guide measured the following functional parameters:

- activation level, outside limits (tension; compression; velocity; acceleration)
- breakaway force, outside limits (tension; compression)
- drag force, outside limits (tension; compression)
- dead band, exceeds limits (tension; compression)
- release rate, outside limits (tension; compression)
- spring rate, outside limits (tension; compression).

The acceptance/rejection limits for each of these parameters will be a function of type and size of snubber. These limits help establish the design modeling assumptions since they are specific; only general comments are given below:

- Linear modeling is the usual approach in dynamic system analysis. Therefore, parameters such as activation level and dead band, which contribute to nonlinear behavior, should be minimized.

- The activation level should be greater than the maximum thermal growth rate combined with minimum breakaway and drag forces so that there is minimal resistance to normal thermal movement. The undesirable condition would be a substantial force so that thermal growth builds up forces within the system until the breakaway level is reached. If the forces are high and breakaway is abrupt, the snubber could be activated and cause undesired resistance.

- Some parameters are sensitive to the specific snubber application. For example, the release rate determines snubber motion after activation occurs. The value would be substantially different for a relief valve snubber than for a seismic snubber.

- Dead band is sensitive to factors such as installation tolerance, air in hydraulic fluid, and manufacturing tolerance; therefore, it is better to determine dead band through testing.

- Breakaway force is sensitive to both vibration and extended periods of inactivity; inactivity may increase breakaway force levels substantially. Both conditions may exist and should be considered.

- The usual tendency is to minimize the dead band level to minimize impact loads in the snubbers and attached components. This tendency needs to be counterbalanced against the increased tolerance to higher vibration levels at higher dead band levels.

- The spring rate or load displacement is an indication of the stiffness in the snubber; however, stiffness is controlled by the associated hardware attached to the structure, the snubber, and the component. Therefore, the spring rate of the snubber is only a part of the picture and evaluations based on the cited values may not be valid.

- The various measured parameters are quite sensitive to the test and the test procedures. An acceptable snubber may be rejected or an unacceptable snubber may be accepted due to variability in test equipment and procedures. This factor is not recognized in the various codes and standards. A definitive set of criteria should be developed to control this variable.

- In some snubbers there is no distinct activation level and release rate; thus, it is necessary to define the force-motion relationship over the appropriate range.

- Snubbers should be tested by free (without activation) exercising for not less than five full-stroke cycles to establish that they are in working order.

- Experimental evidence confirms that the activation level of mechanical snubbers is insensitive to load over a wide range; thus, it is not necessary to conduct a full range of load tests.[a]

- Cyclic loads as such have a minimal effect on lost motion and acceleration based on tests to 40,000 cycles; however, the drag force is changed substantially. For example, the drag force is reduced by nearly 50% under room temperature cyclic loads without simulation of environmental effects.[b]

The concern with regard to aging of snubbers relates to the optimum tests for detecting various degradation modes. Table 3.3 is taken from the DOE Nuclear Standard NE E7-9T and illustrates some of these interrelationships.

The parameters in Table 3.3 such as corrosion and viscosity are strongly influenced by temperature and irradiation. Thus, times to failure may differ markedly from one portion of the plant to another. This is of concern because

---

(a) Pacific Scientific. August 1984. Data Report 1700, Anaheim, California.
(b) Pacific Scientific. 1984. A Simulated 40-Year Service Life Test for a PSA-3 Shock Arrestor with 2% to 3% Friction. Test Report 871, Anaheim, California.

TABLE 3.3. Common Causes for Degradation in Snubber Operating Characteristics

Cause	Measured Parameter[a]				
	Stiffness (spring rate)	Activation Force	Release Rate	Dead Band	Friction (drag/breakaway)
Wear	-	-	-	M	M
Corrosion	-	-	-	-	H,M
Viscosity	H	-	-	-	-
Temperature	H	H	H	-	-
Entrapped air	H	H	H	H	-
Contamination	-	-	-	-	H,M

(a) M - mechanical; H - hydraulic.

an inherent assumption in testing a small sample is the homogeneity of the population. Snubbers taken from one region of a reactor (for example, a cooler region) could display a markedly different failure history than ones removed from another region (for example, a BWR dry well). This issue could warrant consideration in selecting the sample to be tested.

It is apparent that acceptance and qualification of snubbers is based on some or all of the following parameters: activation, breakaway, dead band, drag, release rate, and spring rate. Therefore, any consideration of preservice and in-service testing should consider these same parameters and determine if they will detect the various aging/degradation mechanisms to which snubbers are subjected. As can be seen from the preceding table, measurement of these parameters can detect wear, corrosion, contamination, and changes in hydraulic fluid caused by temperature, changes in viscosity, or entrapped air. Loss of fluid in hydraulic snubbers is obvious, and mechanical snubber lockup can be detected by several tests.

In hydraulic snubbers:

- The hydraulic fluids should have adequate lubricity to minimize galling, be compatible with other materials (e.g., seals), be stable under operating conditions, provide corrosion protection, resist fire, resist radiation damage, and be capable of cleansing by filtration. The effects of entrained or dissolved gases should also be considered.

- Seal materials should be selected considering the effects of radiation, humidity, temperature, possible incompatibility, aging, and resistance to abrasion.

- Snubber spring materials should be selected on the basis of elevated temperature stability, corrosion resistance, friction and galling effects, and minimization of structural defects (also mechanical snubbers).

- Leakage rates should be determined throughout life.

Appendix B of the draft Regulatory Guide suggests testing over a frequency range of 3 to 33 Hz at 5-Hz steps from the 1/2 stroke position. This testing could be appropriate during in-service testing under some circumstances.

ANSI/ASME OM4 is more explicit concerning visual examinations (both pre-service and in-service) and should serve as a model. This also applies to validation of thermal movement and swing clearances.

If multiple small snubbers are used in lieu of a larger snubber, the DOE standard suggests specific values for load sharing, which is a strong function of mismatch, lost motion, and end fitting clearances as well as a lesser function of mismatch of activation level and release rate. The following values are suggested:

- Differential clearance/lost motion between any two snubbers should be less than or equal to 0.02 in.

- Differential in activation levels between any two snubbers should be less than or equal to 10 in./min., or 0.005 g, or 50% of smallest activation level.

- Differential in release rates between any two snubbers should be less than or equal to 10 in./min, or 0.005 g, or 100% of snubber release rate. Maximum rate should be greater than or equal to 10 in./min or 0.001 g.

- Load sharing-peak load should be 1.2 times average load.

Types of test conditions versus specific tests or examinations are compared in Table 3.4. The information in the table was taken from ASME PVP-45 and gives some idea of the scope of tests and examinations as well as where they are applied. Basically, the information agrees with the draft Regulatory Guide, ANSI/ASME OM4, and ASME XI.

Recent studies[a,b] suggest approaches to relaxing current testing criteria. A paper from Impell[a] suggests both a generic improvement of acceptance limits (Phase 1) and detailed computer evaluations (Phase 2). They expect that the drag/breakaway limits and acceleration limit could be increased substantially. A Babcock and Wilcox paper[b] deals specifically with acceleration limits and dead-band displacement. They used sample problems with a multiple response spectra approach to indicate that acceleration limits could increase from 0.02 to 0.26 g without exceeding design stresses. Dead-band displacement proved to be snubber specific. In some instances, only limited increases from the usual 0.030 to 0.040 in. were possible. In others, a three- to four-fold increase was possible.

(a) Eidinger, J., and G. Hau. 1985. "Snubber Reduction by Reduction of Unnecessary Seismic Margins." Presented at ASME Pressure Vessel and Piping Conference, June 24-27, 1985, New Orleans, Louisiana.

(b) Gurdal, R. J. 1985. "Snubber Lockup Accelerations and Acceptable Dead-Band Displacements by Extension of the Response Spectra Method." Presented at ASME Pressure Vessel and Piping Conference, June 24-27, 1985, New Orleans, Louisiana.

TABLE 3.4. Types of Test Conditions[a]

Specific Test or Examination[b]	Qualification Testing	Acceptance Testing	Installation	Hot Functional and Startup Testing (preservice)	In-Service Testing
Drag force					X
Breakaway (RT, T_{op}, friction)	X	X			X
Activation level (RT, T_{op}) (v or a)	X	X			X
Release rate (RT, T_{op})	X	X			X
Dynamic characteristics (1/4, 1/2, 3/4 stroke faulted one-cycle dynamic	X	X			
Abnormal environment transients (repeat others at RT)	X				
Static test (maximum rated load)	X				
Dead band (RT, T_{op})	X	X			
Margin to failure at faulted	X				
Low amplitude axial vibration (5×10^6 cycle)	X				
Spring rate (if applicable)	X	X			
Fluid pressure integrity	X	X			
Full stroke		X			
Freedom of motion		X			X
VT for installation defects			X		
Correct location			X		
Correct line of action and swing clearance			X		

TABLE 3.4. (contd)

Specific Test or Examination[b]	Qualification Testing	Acceptance Testing	Installation	Hot Functional and Startup Testing (preservice)	In-Service Testing
Hydraulic chambers without leaks, cracks		X	X		X
Hydraulic snubbers correctly oriented and seals intact			X		
Sliding surface free from burrs, weld spatter, paint, etc.			X		
Connecting pins present and locked			X		
Structural and piping connections correctly oriented to handle lateral movement			X		
Cold position will handle maximum thermal travel			X		
Shipping installation locking features removed			X		
Visual examination at refueling					X
Hydraulics - vents OK; fluid level OK					X

(a) Sources: ANSI/ASME OM4; ASME PVP-45.
(b) RT - room temperature; T_{op} - operating temperature; V - velocity; a - acceleration.

4.0 OPERATIONAL STRESSES

Mechanical loads are the primary operational stressors that contribute to the failure of mechanical snubbers. To a lesser extent, mechanical loads may also impact the life of hydraulic snubbers. The primary operational stressors that impact hydraulic snubbers are thermal, chemical/environmental, and radiation effects (separately or in combination). These stressors may also degrade mechanical snubbers.

4.1 MECHANICAL

Snubbers are installed to handle a spectrum of dynamic mechanical loads on piping, steam generators, pressurizers, pumps, valves, etc. The major design load is usually seismic; however, snubbers are also used for loads such as valve opening or closure. These loads are anticipated within the design envelope; of greater significance are mechanical loads outside the design envelope such as water or steam hammer and water slugging. Such loads have caused mechanical snubbers to lock up, which can severely load piping during thermal movement. Essentially all snubbers on a given piping system have been locked up by water hammer loads.

Other mechanical loads not normally considered may render snubbers inactive. For example, there have been several cases where snubbers have been used as a ladder. Other mechanical loads include twisting or bending during installation or incorrect installation so that a bending moment occurs.

4.2 THERMAL

Temperature changes can have two effects on snubbers. If incorrectly installed, piping movement may render them inoperable because of bending. A more general effect is degradation. Elevated temperatures age and degrade the plastic seals in hydraulic snubbers, change fluid viscosity, and may lead to high corrosion rates or to distortion of components in mechanical snubbers. Continued snubber operation in BWR dry wells is doubtful if temperatures are high enough to lead to premature aging.

4.3 CHEMICAL/ENVIRONMENTAL

Obvious long-term aging/degradation mechanisms related to chemical and environmental effects include a combination of high humidity and temperature. This combination can lead to oxidation and possible loss of function in mechanical snubbers and in various components of hydraulic snubbers. The

preceding conditions exist; if other chemical contaminants are inadvertently introduced, the degradation could be accelerated.

4.4 RADIATION

Radiation shortens the life of the seal materials used in hydraulic snubbers. However, radiation is only one parameter contributing to seal aging; temperature will have the same effect over an extended period. Radiation can influence viscosity and may change operating characteristics of hydraulic snubbers.

4.5 SYNERGISTIC EFFECTS

Thermal, chemical/environmental, and radiation effects tend to interact. It is possible that the life of some components, particularly seals, could be dramatically reduced. These effects have not been quantified.

5.0 REVIEW OF LICENSEE EVENT REPORTS FROM 1970 TO 1983

The licensee event report (LER) literature pertinent to snubbers has been quite voluminous over the past 10 to 15 years. Earlier reactors used hydraulic snubbers almost exclusively. Surprisingly, the number of snubbers used in some plants in the late 1960s and early 1970s was quite high. For example, Indian Point 2 used 540 snubbers, of which 356 were inside containment (inaccessible); and Fort Calhoun is cited as having 324 snubbers outside containment (accessible). Apparently, some early plants have continued to add snubbers or to switch from one type to another, as indicated by comments in the LERs.

This review makes an effort to statistically analyze the trends. Some obvious perturbations will be cited to permit a relatively broad overview of snubber experience. Because of the ambiguity in citing failures, the cited numbers should be considered to represent approximate and not absolute values. Three areas will be discussed: 1) where snubbers are used; 2) numbers of "failures" per year; and 3) various failure mechanisms and the annual trends observed within these mechanisms.

5.1 PIPING SYSTEMS

The LERs vary widely with respect to citing piping systems where snubbers are used; however, virtually all safety-related piping systems have snubbers. Systems cited again and again in the LERs include the main steam, feedwater, high pressure core injection, low pressure core injection, reactor heat removal, decay heat, chemical volume control, core spray, and containment spray; many other systems are noted. There does not appear to be an obvious trend insofar as including or excluding systems.

5.2 SNUBBER FAILURES

Hydraulic snubbers are the major type being used (see Table 5.1), which accounts for the preponderance of failures in such units. The "not defined" category in Table 5.1 covers cases where the LERs were not explicit because the type of snubber was not a factor (for example, a water hammer incident where supports were damaged). In many such cases, the utility did not cite the type of snubber.

The 1973-1974 figures are not typical because severe seal degradation occurred and repetitive inspections were required over short time intervals (IE Bulletin 73-3). In essentially all of the older units, the polyurethane seals were replaced with ethylene propylene seals.

TABLE 5.1. Snubber Failures from 1973 through 1983

Type	1983	1982	1981	1980	1979	1978	1977	1976	1975	1974	1973
Hydraulic	223	135	>255	130	>374	197	510	152	49	177	7
Mechanical	86	24	71	46	11	--	21	17	--	--	--
Not defined	6	18	30	16	35	21	15	--	4	7	--

Snubber failures by year and operating reactor are presented in Table 5.2. The figures represent the number of failed snubbers cited in one or more LER. The Crystal River 3 value of 110 represents a one-time case. It was not possible to discern any obvious trends from these data.

5.3 FAILURE MECHANISMS

Tables 5.3, 5.4, and 5.5 detail snubber failure mechanisms. These data will almost certainly correlate to some degree with the statistical analyses. There is an attempt to mirror annual trends by classes of snubbers and failure mechanisms.

Table 5.3 covers failure mechanisms for hydraulic snubbers. The seal failures due to selection of an improper material were cited previously. Loss of fluid remains a problem with very little improvement observed from year to year. The seal degradation/aging problem is less severe; however, leaking fittings, damaged seals, etc., are still problems. A simple problem such as keeping the oil reservoir upright has not been solved in 10 years, although this problem is less significant with pressurized reservoirs. The number of mechanisms leading to loss of fluid are not all-inclusive, but they are indicative of the causes.

Major attention has been given to keeping hydraulic snubbers within specification bands for activation, bleed rate, etc. These factors are influenced by loss of fluid to a major degree. In addition, several other factors also play a role, including fluid viscosity and valve settings. An attempt has been made to mirror the reporting of snubbers that are outside the specification band but still generally operable. As noted, the numbers are large.

A problem almost generic in nature that does not surface in Table 5.3 is contaminated fluid, which can cause seal degradation, severe leakage, valve plugging, etc. Many units were not adequately cleaned prior to leaving the factory, and the problem of contaminated fluid has continued for many years. The authors are aware of such incidents that have not been reported in LERs.

TABLE 5.2. Snubber Incidents by Plant and Year from LER Reviews

Plant	1983	1982	1981	1980	1979	1978	1977	1976	1975	1974 or Earlier
Arkansas 1	--	--	--	--	--	3	1	18	--	--
Arkansas 2	--	--	--	--	--	1	--	--	--	--
Beaver Valley 1	--	--	--	--	23/221[a]	--	1	13	--	--
Big Rock Point 1	1	1	--	--	8	--	--	--	--	--
Browns Ferry 1	--		1	--	--	--	--	--	--	4
Browns Ferry 2	--	3	--	--	1	--	--	2	--	4
Browns Ferry 3	--	--	--	--	--	--	--	6	--	--
Brunswick 1	--	--	27	7	13	--	8	3	--	--
Brunswick 2	--	1	132/640	7	44	--	13	9	15	--
Calvert Cliffs 1	1	1	1	5	--	--	--	--	--	--
Calvert Cliffs 2	--	--	--	2	1	--	1	8	8	--
Cook 1	--	--	1	--	2	--	10	1	13	--
Cook 2	--	--	3	--	--	--	1	--	--	--
Cooper Station	6	4	3	2	--	--	1	1	17	--
Crystal River 3	110	3	12	13	1	--	--	1	1	--
Davis-Besse 1	1	--	--	12	1	--	--	5	--	--
Diablo Canyon 1	45	--	--	--	--	--	--	8	--	1
Dresden 1	--	--	--	--	1	--	--	--	3	--
Dresden 2	8	--	5	--	--	--	--	2	2	8
Dresden 3	1	1	2	1	--	--	8	--	2	12
Duane Arnold	16	2	--	--	21	--	2	44	--	1
Farley 1	--		1	1	135	--	--	--	--	--
Farley 2	--	2	1	--	--	--	--	--	--	--
Fitzpatrick	1	2	2	1	2	--	4	158/230	--	4
Fort Calhoun 1	--		5	--	8	--	--	16	12	--
Fort St. Vrain	7	51	16	26	4[b]	--	9	31	--	--
Ginna	1		--	--	1	--	2	2	--	--
Haddam Neck	--		--	--	--	--	--	9	--	1
Hatch 1	1	1	5	48/61	--	--	7	55	--	1
Hatch 2	--	2	4	1	--	--	1	--	2	--
Indian Point 1	--		--	--	--	--	--	--	--	40
Indian Point 2	--	3	2	1	37	40/115	3	1	--	--
Indian Point 3	--	3	3	--	--	--	--	--	--	--
Kewaunee	--		--	--	--	3	--	--	--	--
La Crosse	--	--	--	--	--	--	--	--	--	--
LaSalle 1	5	4	--	--	--	--	--	--	--	--
Maine Yankee	--	2	--	--	--	--	--	1	4	--
McGuire 1	7	--	--	--	--	--	--	--	--	--
McGuire 2	2	--	--	--	--	--	--	--	--	--
Millstone 1	2	4	--	--	--	--	--	2	1	3
Millstone 2	1	1	89	3	1	--	--	2	1	--
Monticello	--	--	--	--	--	1	--	--	--	1
Nine Mile Point 1	--	--	1	--	2	--	4	--	--	--
North Anna 1	--	--	4	1	1	5	--	--	--	--
North Anna 2	1	--	2	--	--	--	--	--	--	--
Oconee 1	2	--	--	--	5	--	--	--	--	--
Oconee 2	--	--	--	4	--	5	--	--	--	--
Oconee 3	--	1	1	1	--	--	--	--	--	--
Oyster Creek 1	3	10	14	7	7	--	--	--	--	3
Palisades	16	6	8	5	3	3	1	--	117	8

TABLE 5.2. (contd)

Plant	1983	1982	1981	1980	1979	1978	1977	1976	1975	1974 or Earlier
Peach Bottom 2	2	2	4	--	--	5	6	26	7	1
Peach Bottom 3	3	2	1	--	--	--	16	10	2	41
Pilgrim 1	1		--	6	6	--	1	--	--	14
Point Beach 1	1	1	--	2	--	4	1	--	--	--
Point Beach 2	2	--	--	--	2	--	1	--	--	--
Prairie Island 1	--	--	--	--	--	--	--	--	--	--
Prairie Island 2	--	--	--	--	--	--	--	--	--	--
Quad-Cities 1	--	--	--	--	--	2	--	4	--	--
Quad-Cities 2	--	--	--	--	3	2	6	5	4	4
Rancho Seco 1	10	3	12	8	5	14	36/81	--	--	--
Robinson 2	--	--	2	--	2	3	--	--	--	1
Salem 1	--	16	2	--	3	--	--	12	--	--
Salem 2	6	4	--	--	--	--	--	--	--	--
San Onofre 1	--	5	4	2	1	9				
San Onofre 2	--	5	--	--	--	--	--	--	--	--
San Onofre 3	3	--	--	--	--	--	--	--	--	--
Sequoyah 1	--	3	--	--	--	--	--	--	--	--
Sequoyah 2	--	3	--	--	--	--	--	--	--	--
St. Lucie 1	--	12	--	--	--	--	--	6	--	--
St. Lucie 2	--	--	--	--	--	--	--	--	--	--
Summer 1	5	--	--	--	--	--	--	--	--	--
Surry 1	30	11	1	4	22	12	4	--	--	--
Surry 2	28	3	2	1	19	36	1	--	--	--
Susquehanna 1	--	--	--	--	--	--	--	--	--	--
Three Mile Island 1	1	--	3	1	--	2	45/259	2	4	5
Trojan	1	--	--	--	--	--	--	--	--	--
Turkey Point 3	--	--	--	--	1	--	--	--	--	--
Turkey Point 4	--	--	1	--	2	20	--	--	--	--
Vermont Yankee 1	--	--	--	3	2	--	31	3	--	--
Yankee-Rowe 1	--	--	1	--	--	--	--	--	8	--
Zion 1	--	1	11	1	--	5	8	--	--	--
Zion 2	3	--	--	--	3	22	11	--	--	--

(a) In some instances, failures were cited as well as the number of snubbers tested.
(b) One LER said most snubbers were out-of-specification.

It is apparent from the number of incidents that hydraulic snubbers have had many problems. Many utilities are changing to mechanical snubbers; however, it is too early to tell if they are simply switching problems.

Far less failure data are available on mechanical snubbers (Table 5.4). The corrosion/oxidation category in Table 5.5 primarily applies to mechanical snubbers. One type of mechanical snubber has been particularly susceptible to failure by corrosion. A major problem with mechanical snubbers is that they fail in an unsafe fashion; they lock up and represent a rigid constraint that could lead to failure of the mounting or pipe (IE Bulletin 81-01). While hydraulic snubbers are somewhat susceptible to dynamic loads such as water

TABLE 5.3. Failure Causes and Mechanisms for Hydraulic Snubbers

Failure Mechanism	1983	1982	1981	1980	1979	1978	1977	1976	1975
Design Weakness:									
Leakage/loss of fluid (cause often not given)	--	--	9	15	8	25	27	26	13
Cracked/failed/damaged O-ring/bushing/seals/gaskets	--	3	14	7	4	15	7	26	5
Fitting leak	2	2	4	6	5	6	38	24	4
Seal degradation/aging (wrong material)	6	11	15	4	--	16	12	17	3
Scoring of piston/body	--	1	--	--	--	2	--	--	1
Worn out O-rings/bushings	--	2	2	3	3	21	3	1	--
Seal failure/particulates remaining after fabrication									
O-rings or seals installed incorrectly	--	--	2	--	1	4	1	1	1
Broken/cracked fluid reservoir	2	1	2	1	1		1	3	--
Loose packing nut/screw	--	--	--	1	--	13	11	3	1
Sight glass leak	--	--	--	--	--	--	1	--	--
Heat damage to fluid reservoir	--	--	2	1	--	1	--	--	--
Scored bushing/worn threads on piston shaft	--	--	1	1	--	--	--	--	--
Rod end cylinder seal	--	--	--	--	--	--	--	--	--
Piston rod seal worn	--	--	2	1	--	--	--	--	--
Scored/broken poppets, poppet springs	--	--	2	3	2	1	4	--	3
Valve leakage	--	--	--	1	--	--	--	--	--
Failure to lock up or outside specifications	--	--	3	1	115	59	170	19	8
Faulty closure shuttle valve	--	--	--	--	--	--	--	--	--
Poppet springs out of place	--	--	--	--	--	--	--	--	--
Scored poppet seats	--	--	--	--	--	--	--	--	--
Outside of specifications	--	--	11	--	--	--	--	--	--
Did not meet activation or bleed rates (high or low)	--	--	--	3	--	--	--	--	--
Length of stroke	--	--	--	5	--	--	--	--	--
Outside Design Envelope:									
Reservoir upside down/improperly installed	--	--	25	6	7	3	7	5	--
Reservoir tube cut	--	--	2	--	--	--	--	--	--

TABLE 5.3. (contd)

Failure Mechanism	1983	1982	1981	1980	1979	1978	1977	1976	1975
Outside Design Envelope: (contd)									
Foreign material plugging bleed screw activation valve	--	--	--	--	--	1	--	--	--
Maintenance error	--	--	--	--	--	--	--	--	--
Out of adjustment	--	--	--	--	--	--	--	--	--
Did not meet acceleration test	--	--	--	--	--	--	--	--	--
Improperly lubricated with grease fluid, contaminated	--	--	--	--	--	--	--	--	--
Water	--	--	--	--	--	--	--	--	--
Solid debris	--	2	--	1	1	--	--	--	--
Unknown:									
Cause not stated	--	--	3	1	--	--	--	--	--

TABLE 5.4. Failure Causes and Mechanisms for Predominately Mechanical Snubbers

Failure Mechanism	1983	1982	1981	1980	1979	1978	1977
Design Weakness:							
Microcracking of capstan springs[a]-- generic frozen and/or broken components	--	40	--	45	2	2	15
Scored components	--	1	--	--	--	--	--
Corrosion/oxidation	--	46	--	45	--	--	--
Outside specifications	--	--	--	--	--	--	--
Did not meet drag force criteria	--	--	--	--	--	--	--
Failed stroke test	--	--	--	--	--	--	--
Outside Design Envelope:							
One-time dynamic load	2	--	--	--	1	--	--
Water hammer	3	2	--	--	1	2	2
Steam hammer	7	--	--	--	--	--	--
Unknown:							
No reason given	5	--	--	--	1	--	--

(a) Microcracking cited; no specific numbers.

TABLE 5.5. Failure Causes and Mechanisms for Hydraulic and Mechanical Scrubbers

Failure Mechanism	1983	1982	1981	1980	1979	1978	1977	1976	1975
Design Weakness:									
Loose set screws	--	--	--	--	--	--	--	--	--
Oxidation/corrosion (primary mechanism)	--	--	2	--	--	--	1	2	--
Design/installation errors	--	--	--	2	7	1	9	3	1
Worn/broken components	--	--	--	1	--	--	--	--	--
Extruded bearings	--	--	7	8	7	--	3	--	--
Loose end clamps, etc.	--	--	--	--	--	3	4	1	1
Excessive wear	--	--	--	1	--	10	--	--	--
Outside Design Envelope:									
Improper installation	--	--	--	--	--	1	2	1	2
Out of alignment/inadequate clearance/ rotated/missing anchors/bolts	--	--	--	--	--	--	--	--	--
Loose clamp	--	--	--	2	--	--	1	--	--
One end disconnected	--	2	1	1	5	7	2	--	2
Rod end bushing not staked	--	--	--	--	--	--	--	--	--
Bushing missing or disengaged	--	--	--	1	--	--	--	--	--
Bracket pin missing	--	--	--	--	--	--	--	--	--
Missing load pin	--	--	1	--	1	--	--	--	--
Maintenance error	2	--	--	1	--	1	1	--	--
Component failure	--	--	1	--	--	--	--	--	--
Bent/damaged/broken components	1	--	--	2	6	6	2	--	--
Installation/maintenance error	--	--	--	--	--	--	--	--	--
Mechanical binding, no detail	--	--	--	1	--	--	--	--	--
Excessive lateral loads (thermal)	--	--	2	1	1	--	--	--	--
Probably used as a ladder	--	--	--	--	--	--	--	--	--
Maintenance mishandling	--	--	--	--	1	--	--	--	--
Vibration	--	--	--	--	--	--	1	--	1
Missing pins	--	--	3	--	1	--	--	--	--
Water hammer (see mechanical)	--	--	--	--	--	--	4	2	--
Support damage	--	--	1	2	3	--	5	1	3

hammer, mechanical snubbers are much more susceptible. They suffer severe internal damage, remain in a locked position, and may damage the piping system. Since water hammer is more probable than a seismic event, it will remain a problem.

A study supported by the Electric Power Research Institute (EPRI) on mechanical snubbers removed from Three Mile Island Unit 2 (TMI-2) supports the failure mechanisms cited in the LERs.[a] Some snubbers locked up. Examination of the disassembled snubbers revealed substantial damage to the internals in the form of bowed or twisted torsion rods and screw shafts. The postulated damage scenarios included water hammer or high vibrations during an accident from causes such as cavitation of the primary pump or blow off of the pressure-operated relief valve.

Loss of function of mechanical snubbers at other reactors has been attributed to both water hammer and high vibration; thus, the scenarios are convincing. An undetected water hammer has led to snubber lockup, and subsequent heatup and cooldown tore the snubber mounts out of the wall by thermal expansion. Vibration may act similarly.

ASME PVP-55[b] includes a series of papers on factors leading to a loss of function. Some obvious examples include low level vibrations, lateral loads, and environmental effects, particularly salt air.

An NRC report[c] discusses mechanical snubber failures. The impetus for the report was the lockup of five safety-related mechanical snubbers in 1983. While these conditions appear to indicate severe loads such as water hammer, no such incidents were known to occur.

The search was extended to other reactors. For example, seven mechanical snubbers were found to be inoperable at another plant; the probable failure cause was mishandling and/or abuse during construction or installation. Failure incidents at some other facilities were believed to be due to pipe vibration with thermal effects possibly contributing to slow deterioration. At another plant, lockup was attributed to maintenance misuse (for example,

---

(a) Wadsworth, F. L., et al. 1983. Examination of Mechanical Snubber from TMI-2. EPRI-NP-2966, Electric Power Research Institute, Palo Alto, California.

(b) American Society of Mechanical Engineers. 1981. Snubber Design Application and Minimization Methods. PVP-55, New York.

(c) Hsu, C. March 23, 1984. Mechanical Snubber Failure. AEOD/E406, Office of the Analysis and Evaluation of Operational Data, U. S. Nuclear Regulatory Commission, Washington, D.C.

stepping on the snubbers or using them as rigging points). At another plant, several snubbers failed to meet the functional stroke test.

These incidents appear to indicate that several mechanisms can lead to mechanical snubbers locking up or being out of specification. The problem could be more widespread than recognized. The responses to IE Bulletin 81-01 have been assembled and reviewed (AEOD/E406), which may lead to further clarification.

Failures not unique to a class of snubbers are listed in Table 5.5. Installation and design errors often lead to failure of snubber supports because thermal expansion is not accounted for; supports have literally been torn apart under such conditions. A recurring problem that is often linked to vibration is the loss of function because one end is disconnected. Vibration may lead to total loss of function, unscrew the pistons, extrude the bearing and shake out the retaining pins. A source of vibration relatively near a snubber can result in loss of function. Loss of function can also occur because snubber parts are bent or broken when used as a ladder or due to lateral loads from thermal expansion.

Table 5.5 lists several failure mechanisms. In turn, these mechanisms can be grouped into modes related to underlying causes of failure such as errors in design, installation, or operation. It is possible to correlate failure causes into the specific categories of design, installation, and operation.

Recent IE Information Notices--IN 84-67[a] or IN 84-73[b]--as well as AEOD/E423[c] cite functional failures of both hydraulic and mechanical snubbers. IE IN 84-67 mentions the Palisades plant where 5 of 14 large hydraulic snubbers were tested on the steam generators and failed to lock up. The cause was attributed to insufficient counterboring of valve block end caps, which inhibited the shuttle valve from properly closing the port blocks. The root cause was a nonstandard spring that gave high activation velocities and prevented proper shuttle valve positioning. Subsequent testing confirmed that all 14 snubbers failed to lock up. AEOD/E423 expands on this case, citing other plants and other manufacturers whose large hydraulic snubbers that are

---

(a) IE IN 84-67. August 17, 1984. Recent Snubber Inservice Testing with High Failure Rates. U.S. Nuclear Regulatory Commission, Washington, D.C.

(b) IE IN 84-73. September 14, 1984. Downrating of Self-Aligning Ball Bushings Used in Snubbers. U.S. Nuclear Regulatory Commission, Washington, D.C.

(c) Brown, E. J., to K. V. Sefrit, memo. September 20, 1984. Failure of Large Hydraulic Snubbers to Lockup. AEOD/E423, Office of the Analysis and Evaluation of Operational Data, U.S. Nuclear Regulatory Commission, Washington, D. C.

typically used on steam generators had malfunctioned. Causes included: inadequate design, inadequate control of design changes, inadequate control of manufacturing procedures to implement design changes, inadequate functional specifications, lack of requirements for functional qualification testing, derating of subcomponents after equipment was placed in service, component aging during service or shelf life, questionable qualification testing, and exemption of large snubbers from surveillance testing requirements in the technical specifications. The preceding list covers snubbers that probably never functioned correctly as well as snubbers that suffered aging.

IE IN 84-67 also discussed hydraulic and mechanical snubber failures at Surry Power Station Unit 1. Hydraulic snubber failure modes and causes and mechanical failures modes are shown in Table 5.6. Several failure mechanisms are related to aging/degradation. More significantly, a substantial number of both hydraulic and mechanical snubbers failed to lock up; 30% of the hydraulic snubbers and 32% of the mechanical snubbers failed activation tests. Some snubbers failed in more than one mode.

Turkey Point's mechanical snubbers exhibited similar behavior; about 40% of those tested failed to meet specifications. In addition, 17 snubbers were not staked at the ball nut thread joint. At Braidwood, the steam generator hydraulic snubbers failed to pass the qualification test. These units would not hold hydraulic fluid at loads of 10% to 33% of stated capacity because the mechanical seals failed.

IE IN 84-67 cites arguments that drag/breakaway tests and acceleration tests at rated load may actually accentuate failure. The NRC does not agree with this supposition.

IE IN 84-73 describes another problem pertinent to both hydraulic and mechanical snubbers. Self-aligning ball bushings are used in both types of snubbers. At one plant, one such bushing failed at a static load below the rated load and rendered the snubber inoperable. At least two manufacturers had downrated such bushings, which originally had been used in the aircraft industry, on the basis that snubber specifications exceeded the ideal conditions of the aircraft industry.

5.4 STATISTICAL ANALYSES OF FAILURE DATA

Three sets of data were compiled from LER abstracts stored in the RECON Information Retrieval system maintained by the DOE Technical Information Center at Oak Ridge. The Oak Ridge data base contained approximately 650 LER abstracts relevant to snubber failures from 1973 to 1983. Each of the three sets of data was compiled by different researchers using essentially the same LER data base.

TABLE 5.6. Failure Modes and Causes for Surry Power Station Unit 1 Snubbers[a]

a) HYDRAULIC SNUBBER FAILURE MODES[a]

Mode	No. of Failed Snubbers	% of Snubbers Tested	% of Snubbers Failed[b]
Low activation in tension	13	8	2
Low activation in compression	3	2	6
Low bleed in tension	11	7	23
Low bleed in compression	10	6	21
High activation in tension	17	11	35
High activation in compression	10	6	21
High bleed in tension	6	4	13
High bleed in compression	3	2	6

b) HYDRAULIC SNUBBER FAILURE CAUSES

Mode	No. of Failed Snubbers	% of Snubbers Tested	% of Snubbers Failed
No observable defect	6	4	26
Degraded EP seals	3	2	13
Polyurethane piston seals	7	4	30
Poppet upside down	3	2	13
Debris in fluid	1	1	4
Poppet stuck	1	1	4
Activation adjustment screw broken	1	1	4
Piston/cylinder scoring	2	1	9

c) MECHANICAL SNUBBER FAILURE MODES[c]

Mode	No. of Failed Snubbers	% of Snubbers Tested	% of Snubbers Failed
High drag	14	21	66
Locked up	5	8	24
High acceleration	1	2	5
Locked up in compression	1	2	5

(a) A total of 160 hydraulic snubbers were tested; 48 snubbers (or 30%) failed.

(b) Failures total more than 100% because some snubbers exhibited more than one failure mode or cause.

(c) A total of 66 mechanical snubbers were tested; 21 snubbers (or 32%) failed.

These three compilations are compared in Table 5.7. This table illustrates some of the difficulties in using LER information. A more detailed plant-by-plant comparison of the three compilations is presented in Table 5.8. These tables indicate an important source of errors in snubber failure calculations. Using present LER information, it is frequently not possible to unambiguously categorize snubber failures according to a consistent scheme. Consequently, the number of failures that are assigned to a certain category might differ markedly from one study to another.

Data Set A is the result of an exhaustive computer search of the LER abstracts; Data Sets B and C result from manual reviews of the data. Therefore, in most of the following tabulations of LER failures, Data Set A will be used.

Tables 5.9 and 5.10 list failure modes and causes extracted from the LERs; not too surprisingly, the operational modes tend to control in total numbers. This relates back to Tables 5.3, 5.4, and 5.5, where the large spectrum of aging/degradation mechanisms are cited. It is obvious that correcting a single problem will not solve the entire problem.

Tables 5.11 and 5.12 permit an analysis of failures by reactor by year from 1973 through 1984. A summary of the failures by snubber type is shown in Table 5.13. The higher levels of hydraulic snubber failures relate to the

TABLE 5.7. Comparison of the Number of Incidents by Year for Three Data Sets

Snubber Type	No. of Snubber Failures										
	1973	1974	1975	1976	1977	1978	1979	1980	1981	1982	1983
Data Set A:											
Unknown	--	25	30	1	12	7	75	5	12	23	67
Hydraulic	272	472	54	161	385	248	308	114	330	134	66
Mechanical	--	14	--	17	21	--	11	46	83	20	49
Data Set B:											
Unknown	--	18	193	--	7	3	--	--	35	25	54
Hydraulic	267	324	82	169	441	133	306	82	341	133	89
Mechanical	--	11	2	5	13	--	57	45	9	18	26
Data Set C (through 1984):											
Unknown	--	7	4	--	15	21	35	16	30	18	6
Hydraulic	7	177	49	152	510	197	374	130	255	135	223
Mechanical	--	--	--	17	21	--	11	46	71	24	86

TABLE 5.8. Comparison of Snubber Incidents by Plant for Three Data Sets

Power Plant	Data Set A	Data Set B	Data Set C
Arkansas 1	24	23	22
Arkansas 2	24	24	38
Beaver Valley 1	24	24	38
Big Rock Point 1	10	10	10
Browns Ferry 1	62	11	55
Browns Ferry 2	31	28	19
Browns Ferry 3	6	12	11
Brunswick 1	44	46	58
Brunswick 2	221	188	221
Calvert Cliffs 1	9	19	8
Calvert Cliffs 2	20	1	20
Cook 1	32	18	27
Cook 2	4	4	4
Cooper 1	43	38	40
Cooper 2	--	2	--
Crystal River 3	107	90	141
Davis-Besse 1	19	5	19
Diablo Canyon 1	8	45	67
Dresden 1	4	3	7
Dresden 2	26	82	25
Dresden 3	46	47	30
Duane Arnold	47	72	87
Farley 1	137	136	137
Farley 2	9	3	3
FFTF	--	43	--
FitzPatrick	73	76	126
Fort Calhoun 1	77	67	49
Fort St. Vrain	147	136	144
Ginna	6	6	6
Haddam Neck	12	--	10
Hatch 1	117	126	118
Hatch 2	8	5	11
Humboldt Bay	4	--	--
Indian Point 1	1	--	40
Indian Point 2	197	26	90
Indian Point 3	38	39	8
Kewaunee	2	2	3
La Cross	--	--	--
LaSalle 1	25	8	9
Maine Yankee	8	7	7

TABLE 5.8. (contd)

Power Plant	Data Set A	Data Set B	Data Set C
McGuire 1	3	2	7
McGuire 2	--	--	--
Millstone 1	101	79	17
Millstone 2	84	24	98
Monticello	55	57	2
Nine Mile Point 1	25	7	7
North Anna 1	14	8	11
North Anna 2	3	4	3
Oconee 1	8	10	7
Oconee 2	19	8	9
Oconee 3	3	3	3
Oyster Creek 1	142	160	44
Palisades	26	213	167
Peach Bottom 2	41	50	53
Peach Bottom 3	177	177	75
Pilgrim 1	26	7	28
Point Beach 1	4	23	9
Point Beach 2	2	2	5
Pairie Island 1	--	--	--
Pairie Island 2	--	--	--
Quad-Cities 1	13	13	6
Quad-Cities 2	35	34	20
Rancho Seco 1	85	95	88
Robinson 2	7	7	8
Salem 1	39	33	33
Salem 2	15	10	10
San Onofre 1	20	19	21
San Onofre 2	5	7	5
San Onofre 3	3	1	3
Sequoyah 1	3	3	3
Sequoyah 2	3	3	3
St. Lucie 1	23	23	18
St. Lucie 2	--	--	--
Summer 1	5	4	5
Surry 1	78	50	84
Surry 2	97	65	90
Three Mile Island 1	86	122	63
Three Mile Island 2	2	--	--
Trojan	1	2	1
Turkey Point 3	34	6	1
Turkey Point 4	34	24	23
Vermont Yankee 1	40	12	39
Yankee-Rowe 1	--	8	9
Zion 1	23	26	24
Zion 2	39	1	39

TABLE 5.9. Failure Modes for Data Set A (1973-1984)

Failure Mode	Number of Failed Snubbers
Unknown	49
Locked up	255
Out of tolerance	923
Would not activate	1835

TABLE 5.10. Ultimate Failure Causes for Data Set A (1973-1983)

Ultimate Failure Cause	Number of Failed Snubbers
Unknown	25
Design	886
Installation	257
Operation	1894

numbers in a given plant. It is a fair assumption that the number of mechanical snubber failures will increase in the future because of the large numbers being used. The data from Table 5.13 are expanded in Table 5.14, showing plant-specific failures.

Table 5.15 gives failure proportions by year, calculated using the ratio of the number of failures reported to the total number of snubbers inspected. Only a fraction of the LERs (~8%) reported the number of snubbers that were inspected; thus, the proportions calculated in Table 5.15 may be biased. Similar data are given in Table 5.16 by plant. The data are summarized in Tables 5.17 and 5.18 according to very broad failure mode and failure cause categories. In Table 5.19, the mean failure rates by manufacturer and failure cause are compared as related to design, installation, and operation.

Failure rates have been calculated and categorized in Tables 5.20 through 5.23. The failure rate is calculated using the ratio:

$$\frac{\text{No. of reported failures}}{\text{Total no. of snubbers in operation}}$$

TABLE 5.11. Snubber Incidents by Plant and Year for Data Set A

Plant	1973	1974	1975	1976	1977	1978	1979	1980	1981	1982	1983
Arkansas 1	--	--	--	18	1	5	--	--	--	--	--
Arkansas 2	--	--	--	--	--	--	--	--	--	--	--
Beaver Valley 1	--	--	--	--	--	1	23	--	--	--	--
Big Rock Point 1	--	--	--	--	--	--	8	--	--	1	1
Browns Ferry 1	6	55	--	--	--	--	--	--	1	--	--
Browns Ferry 2	--	22	4	--	2	--	1	--	--	2	--
Browns Ferry 3	--	--	--	--	6	--	--	--	--	--	--
Brunswick 1	--	--	--	--	3	7	28	3	3	--	--
Brunswick 2	--	--	--	20	7	10	44	7	132	1	--
Calvert Cliffs 1	--	--	--	--	--	--	--	5	1	1	2
Calvert Cliffs 2	--	--	--	8	8	1	1	2	--	--	--
Cook 1	--	--	--	13	2	10	2	--	3	--	2
Cook 2	--	--	--	--	--	1	--	--	3	--	--
Cooper Station	--	6	--	19	1	1	--	2	3	4	6
Cooper 2	--	--	--	--	--	--	--	--	--	--	--
Crystal River 3	--	--	--	--	1	--	2	13	87	1	3
Davis-Besse 1	--	--	--	--	5	--	1	12	--	--	3
Diablo Canyon 1	--	--	--	--	8	--	--	--	--	--	--
Dresden 1	--	--	--	3	--	1	--	--	--	--	--
Dresden 2	--	12	--	2	2	--	--	--	4	--	6
Dresden 3	11	--	--	2	--	8	--	1	2	1	1
Duane Arnold	--	1	1	--	34	1	2	--	--	2	6
Farley 1	--	--	--	--	--	--	135	1	1	--	--
Farley 2	--	--	--	--	--	--	--	--	1	2	6
FitzPatrick	--	--	3	--	57	4	2	3	--	2	2
Fort Calhoun 1	30	10	--	10	16	--	11	--	--	--	--
Fort St. Vrain	--	--	--	--	31	9	7	23	16	51	10
Ginna	--	--	--	--	2	2	1	--	--	--	1
Haddam Neck	--	--	3	--	8	1	--	--	--	--	--
Hatch 1	--	--	--	--	55	5	--	51	4	1	1
Hatch 2	--	--	--	--	--	3	--	1	2	2	--
Humboldt Bay	4	--	--	--	--	--	--	--	--	--	--
Indian Point 1	--	1	--	--	--	--	--	--	--	--	--
Indian Point 2	--	149	--	1	3	37	2	--	2	3	--
Indian Point 3	--	--	--	--	--	--	35	--	3	--	--
Kewaunee	--	--	--	--	--	2	--	--	--	--	--
LaCrosse	--	--	--	--	--	--	--	--	--	--	--
LaSalle 1	--	--	--	--	--	--	--	--	--	4	21
Maine Yankee	--	--	--	4	--	--	--	--	--	2	2
McGuire 1	--	--	--	--	--	--	--	--	--	--	3
McGuire 2	--	--	--	--	--	--	--	--	--	--	--
Millstone 1	76	8	5	8	2	--	--	--	--	2	--
Millstone 2	--	--	--	1	2	--	1	3	75	1	1
Monticello	42	10	3	--	--	--	--	--	--	--	--
Nine Mile Point 1	15	--	--	--	4	1	1	--	1	--	3
North Anna 1	--	--	--	--	--	5	3	--	3	--	3
North Anna 2	--	--	--	--	--	--	--	--	2	--	1
Oconee 1	--	--	--	--	--	--	5	--	1	--	2
Oconee 2	--	--	--	--	--	5	--	4	--	--	1
Oconee 3	--	--	--	--	--	--	--	1	1	1	--

TABLE 5.11. (contd)

Plant	1973	1974	1975	1976	1977	1978	1979	1980	1981	1982	1983
Oyster Creek 1	73	34	--	--	--	--	7	3	13	10	2
Palisades	--	1	--	--	1	3	3	3	8	6	1
Peach Bottom 2	--	1	--	24	6	4	--	--	4	2	--
Peach Bottom 3	--	148	2	9	14	--	--	--	1	3	--
Pilgrim 1	1	14	--	--	--	6	5	--	--	--	--
Point Beach 1	--	--	--	--	1	1	--	1	--	1	--
Point Beach 2	--	--	--	--	1	1	--	--	--	--	--
Prairie Island 1	--	--	--	--	--	--	--	--	--	--	--
Prairie Island 2	--	--	--	--	--	--	--	--	--	--	--
Quad-Cities 1	7	--	--	4	--	2	--	--	--	--	--
Quad-Cities 2	--	9	4	5	5	2	3	--	--	--	7
Rancho Seco 1	--	--	--	--	36	14	5	8	9	3	10
Robinson 2	--	1	--	--	--	3	1	2	--	--	--
Salem 1	--	--	--	12	--	--	3	--	2	22	--
Salem 2	--	--	--	--	--	--	--	--	--	4	11
San Onofre 1	--	--	--	--	--	9	1	2	3	5	--
San Onofre 2	--	--	--	--	--	--	--	--	--	5	--
San Onofre 3	--	--	--	--	--	--	--	--	--	--	3
Sequoyah 1	--	--	--	--	--	--	--	--	--	3	--
Sequoyah 2	--	--	--	--	--	--	--	--	--	3	--
St. Lucie 1	--	--	--	11	--	--	--	--	8	4	--
St. Lucie 2	--	--	--	--	--	--	--	--	--	--	--
Summer 1	--	--	--	--	--	--	--	--	--	--	5
Surry 1	--	--	--	--	1	12	22	4	1	11	27
Surry 2	--	--	--	--	--	36	19	1	9	8	24
Three Mile Island 1	--	15	16	2	45	2	--	1	3		2
Three Mile Island 2	--	--	--	--	--	--	--	--	--	--	2
Trojan	--	--	--	--	--	--	--	--	--	1	--
Turkey Point 3	7	--	25	--	--	--	1	--	--	1	--
Turkey Point 4	--	5	6	--	--	--	20	2	--	1	--
Vermont Yankee 1	--	--	--	3	31	--	2	3	1	--	--
Yankee-Rowe 1	--	--	--	--	--	--	--	--	--	--	--
Zion 1	--	--	--	--	6	5	--	--	11	1	--
Zion 2	--	--	--	--	11	22	3	--	--	--	3

The LER data provided no information about the total number of snubbers in operation and no comprehensive list of the snubber population was available. It was, therefore, necessary to estimate this population. Five sets of assumptions were used to estimate the population. The most conservative set of assumptions assumed that an average power plant commissioned before 1977 contained 100 snubbers while a plant commissioned after 1977 contained 300. The least conservative set of assumptions assumed 1000 snubbers were present in a pre-1977 plant and 2000 in a post-1977 plant.

In Tables 5.20 and 5.21, only the most dangerous types of failures (lock up and would not activate) are included; out-of-tolerance failures have been deleted. In Tables 5.22 and 5.23, all different types of failures are listed.

TABLE 5.12. Snubber Incidents by Plant and Year for Data Set B

Plant	1973	1974	1975	1976	1977	1978	1979	1980	1981	1982	1983	1984
Unknown	--	--	--	--	--	10	22	3	--	--	--	3
Arkansas 1	--	--	--	--	18	1	4	--	--	--	--	--
Beaver Valley 1	--	--	--	--	--	--	1	23	--	--	--	--
Big Rock Point 1	--	--	--	--	--	--	--	8	--	--	1	1
Browns Ferry 1	--	6	4	--	--	--	--	--	--	1	--	--
Browns Ferry 2	--	--	19	4	--	2	--	--	--	--	3	--
Browns Ferry 3	--	--	6	--	--	6	--	--	--	--	--	--
Brunswick 1	--	--	--	--	--	3	7	28	3	5	--	--
Brunswick 2	--	--	--	--	14	7	6	23	5	132	1	--
Calvert Cliffs 1	--	--	--	--	8	--	1	--	7	1	1	1
Calvert Cliffs 2	--	--	--	--	--	--	--	1	--	--	--	--
Cook 1	--	--	--	--	13	2	1	--	--	2	--	--
Cook 2	--	--	--	--	--	--	1	--	--	3	--	--
Cooper Station	--	--	6	1	19	--	1	--	--	3	2	6
Cooper 2	--	--	--	--	--	--	--	--	--	--	2	--
Crystal River 3	--	--	--	--	--	1	--	--	--	88	1	--
Davis-Besse 1	--	--	--	--	--	3	--	1	--	--	--	1
Diablo Canyon 1	--	--	--	--	--	--	--	--	--	--	--	45
Dresden 1	--	--	--	--	3	--	--	--	--	--	--	--
Dresden 2	--	--	32	6	2	28	--	--	--	4	--	10
Dresden 3	--	10	9	12	2	--	8	--	1	2	1	2
Duane Arnold	--	1	2	--	55	--	--	--	--	4	10	--
Farley 1	--	--	--	--	--	--	--	135	--	--	1	--
Farley 2	--	--	--	--	--	--	--	--	--	--	1	2
FFTF	--	--	--	--	--	--	--	43	--	--	--	--
FitzPatrick	--	--	--	8	--	57	--	2	3	2	3	1
Fort Calhoun 1	--	30	10	1	10	16	--	--	--	--	--	--
Fort St. Vrain	--	--	--	--	--	30	9	4	21	14	51	7
Ginna	--	--	--	--	--	2	2	1	--	--	--	1
Hatch 1	--	--	--	5	--	55	6	--	50	4	5	1
Hatch 2	--	--	--	--	--	--	--	--	1	4	--	--
Indian Point 2	--	--	15	--	1	3	--	2	--	2	3	--
Indian Point 3	--	--	--	--	--	--	--	35	--	--	4	--
Kewaunee	--	--	--	--	--	--	2	--	--	--	--	--
LaSalle 1	--	--	--	--	--	--	--	--	--	4	4	--
Maine Yankee	--	--	--	4	--	--	--	--	--	3	--	--
McGuire 1	--	--	--	--	--	--	--	--	--	--	2	--
Millstone 1	57	8	5	8	--	--	--	--	--	--	--	1
Millstone 2	--	--	1	--	3	--	--	2	16	1	1	--
Monticello	52	--	5	--	--	--	--	--	--	--	--	--
Nine Mile Point 1	--	--	--	--	4	1	1	--	1	--	--	--
North Anna 1	--	--	--	--	--	2	2	--	4	--	--	--
North Anna 2	--	--	--	--	--	--	--	--	3	--	1	--
Oconee 1	--	--	--	--	--	--	3	--	6	--	1	--
Oconee 2	--	--	--	--	--	--	5	1	1	--	1	--
Oconee 3	--	--	--	--	--	--	--	1	1	1	--	--
Oyster Creek 1	73	57	--	--	--	--	1	4	15	10	--	--
Palisades	--	1	188	--	--	2	2	4	8	6	2	--
Peach Bottom 2	--	1	7	25	6	5	--	--	4	2	--	--
Peach Bottom 3	--	147	2	10	15	1	--	--	--	2	--	--

TABLE 5.12. (contd)

Plant	1973	1974	1975	1976	1977	1978	1979	1980	1981	1982	1983	1984
Pilgrim 1	--	4	--	--	--	--	--	3	--	--	--	--
Point Beach 1	19	--	--	--	1	1	--	1	--	1	--	--
Point Beach 2	--	--	--	--	1	--	1	--	--	--	--	--
Quad-Cities 1	7	--	--	4	--	2	--	--	--	--	--	--
Quad-Cities 2	8	6	5	5	5	2	3	--	--	--	--	--
Rancho Seco 1	--	21	--	--	36	2	4	8	11	3	10	--
Robinson 2	--	1	--	--	--	3	1	2	--	--	--	--
Salem 1	--	--	--	12	--	--	3	--	2	16	--	--
Salem 2	--	--	--	--	--	--	--	--	--	4	6	--
San Onofre 1	--	--	--	--	--	9	1	1	3	5	--	--
San Onofre 2	--	--	--	--	--	--	--	--	--	7	--	--
San Onofre 3	--	--	--	--	--	--	--	--	--	--	1	--
Sequoyah 1	--	--	--	--	--	--	--	--	--	3	--	--
Sequoyah 2	--	--	--	--	--	--	--	--	--	3	--	--
St. Lucie 1	--	--	--	11	--	--	--	--	8	4	--	--
Summer 1	--	--	--	--	--	--	--	--	--	--	4	--
Surry 1	--	--	--	--	8	4	3	2	2	10	21	--
Surry 2	--	--	--	--	--	4	19	1	9	8	24	--
Three Mile Island 1	--	5	17	2	90	2	--	1	4	--	1	--
Trojan	--	--	--	--	--	--	--	--	1	1	--	--
Turkey Point 3	5	--	--	--	--	--	1	--	--	--	--	--
Turkey Point 4	--	--	--	--	--	20	2	--	1	--	1	--
Vermont Yankee 1	--	--	--	3	3	--	2	3	1	--	--	--
Yankee-Rowe 1	--	--	8	--	--	--	--	--	--	--	--	--
Zion 1	--	--	--	--	7	5	--	2	11	1	--	--
Zion 2	--	--	--	--	1	--	--	--	--	--	--	--

TABLE 5.13. Snubber Failures by Year and Snubber Type for Data Set A

	Type of Snubber						
	Unknown		Hydraulic		Mechanical		
Year	Number	Rate[a]	Number	Rate	Number	Rate	Rate
1973	--	--	272	10.88	--	--	10.88
1974	25	2.78	472	8.58	14	14.00	7.86
1975	30	3.75	54	2.84	--	--	3.11
1976	1	1.00	161	3.43	17	8.50	3.58
1977	12	1.20	385	6.42	21	10.50	5.81
1978	7	1.00	248	3.76	--	--	3.49
1979	75	5.36	308	5.92	11	2.75	5.63
1980	5	1.00	114	2.43	46	23.00	3.06
1981	12	1.71	330	6.47	83	9.22	6.34
1982	23	1.77	134	3.35	20	1.67	2.72
1983	67	5.15	66	2.00	49	2.88	2.89
1984	--	--	--	--	--	--	--
Total	257	2.95	2544	5.14	261	5.33	4.85

(a) No. of failed snubbers reported per LER.

TABLE 5.14. Snubber Failures by Plant and Snubber Type for Data Set A

Plant	Type of Snubber					
	Unknown		Hydraulic		Mechanical	
	Number	Rate[a]	Number	Rate	Number	Rate
Arkansas 1	--	--	24	4.00	--	--
Arkansas 2	--	--	--	--	--	--
Beaver Valley 1	--	--	24	12.00	--	--
Big Rock Point 1	--	--	--	--	10	3.33
Browns Ferry 1	4	4.00	58	9.67	--	--
Browns Ferry 2	2	2.00	14	2.33	15	7.50
Browns Ferry 3	--	--	6	6.00	--	--
Brunswick 1	18	2.25	26	2.89	--	--
Brunswick 2	5	1.00	216	7.45	--	--
Calvert Cliffs 1	--	--	9	1.80	--	--
Calvert Cliffs 2	1	1.00	19	4.75	--	--
Cook 1	2	2.00	30	3.75	--	--
Cook 2	--	--	4	1.33	--	--
Cooper Station	1	1.00	33	2.36	9	2.25
Crystal River 3	2	2.00	105	13.13	--	--
Davis-Besse 1	--	--	19	3.17	--	--
Diablo Canyon 1	--	--	--	--	8	8.00
Dresden 1	--	--	4	2.00	--	--
Dresden 2	--	--	20	2.86	6	3.00
Dresden 3	9	4.50	34	3.09	3	1.00
Duane Arnold	6	1.20	28	3.11	13	13.00
Farley 1	--	--	137	45.67	--	--
Farley 2	6	6.00	3	1.00	--	--
FitzPatrick	5	1.67	68	1.00	--	--
Fort Calhoun 1	11	5.50	66	9.43	--	--
Fort St. Vrain	5	2.50	142	4.44	--	--
Ginna	--	--	6	1.50	--	--
Haddam Neck	--	--	12	4.00	--	--
Hatch 1	--	--	72	8.00	45	45.00
Hatch 2	--	--	4	1.33	4	2.00
Humboldt Bay	--	--	4	4.00	--	--
Indian Point 1	--	--	1	1.00	--	--
Indian Point 2	--	--	197	10.37	--	--
Indian Point 3	10	--	38	9.50	--	--
Kewaunee	--	--	2	1.00	--	--
LaSalle 1	--	3.33	1	1.00	14	2.33
Maine Yankee	1	1.00	7	1.40	--	--
McGuire 1	--	--	--	--	3	1.50
Millstone 1	3	1.50	98	9.80	--	--
Millstone 2	--	--	10	1.25	74	24.67

TABLE 5.14. (contd)

Plant	Type of Snubber					
	Unknown		Hydraulic		Mechanical	
	Number	Rate[a]	Number	Rate	Number	Rate
Monticello 1	13	4.33	42	21.00	--	--
Nine Mile Point 1	--	--	25	2.50	--	--
North Anna 1	2	2.00	12	1.20	--	--
North Anna 2	--	--	3	1.00	--	--
Oconee 1	--	--	7	1.40	1	1.00
Oconee 2	1	1.00	9	3.00	--	--
Oconee 3	1	1.00	1	1.00	1	1.00
Oyster Creek 1	3	3.00	137	6.52	2	2.00
Palisades	2	1.00	24	1.41	--	--
Peach Bottom 2	2	2.00	39	3.00	--	--
Peach Bottom 3	3	3.00	174	8.29	--	--
Pilgrim 1	2	1.00	24	3.43	--	--
Point Beach 1	--	--	4	1.00	--	--
Point Beach 2	--	--	2	1.00	--	--
Quad-Cities 1	--	--	13	3.25	--	--
Quad-Cities 2	--	--	28	2.15	7	7.00
Rancho Seco 1	1	1.00	84	4.67	--	--
Robinson 2	1	1.00	6	2.00	--	--
Salem 1	3	3.00	22	22.00	14	4.67
Salem 2	4	2.00	2	2.00	9	9.00
San Onofre 1	1	1.00	17	4.25	2	2.00
San Onofre 2	5	5.00	--	--	--	--
San Onofre 3	2	2.00	--	--	1	1.00
Sequoyah 1	--	--	--	--	3	3.00
Sequoyah 2	--	--	--	--	3	3.00
St. Lucie 1	--	--	14	7.00	9	3.00
Summer 1	5	1.00	--	--	--	--
Surry 1	45	7.50	33	2.36	--	--
Surry 2	44	11.00	53	4.82	--	--
Three Mile Island 1	12	2.40	74	3.89	--	--
Three Mile Island 2	--	--	--	--	2	2.00
Trojan	1	1.00	--	--	--	--
Turkey Point 3	1	1.00	32	10.67	1	1.00
Turkey Point 4	11	3.67	21	10.50	2	1.00
Vermont Yankee 1	--	--	40	4.44	--	--
Zion 1	--	--	23	2.56	--	--
Zion 2	1	1.00	38	7.60	--	
Total	257	2.95	2544	5.13	261	5.33

(a) No. of failed snubbers reported per LER.

TABLE 5.15. Proportion of Failed Snubbers in Operating Nuclear Power Plants for Data Set A

	Hydraulic Snubbers			Mechanical Snubbers		
Year	No. Failed	No. Inspected	Failure Proportion, %	No. Failed	No. Inspected	Failure Proportion, %
76	44	531	8	--	--	--
77	178	702	25	--	--	--
78	91	652	14	--	--	--
79	24	231	10	--	--	--
80	7	58	12	45	61	74
81	214	912	23	54	152	36
82	5	20	25	5	227	2
83	--	--	--	8	37	22
Total	563	3106	18	112	477	23

TABLE 5.16. Snubber Failure Data by Plant for Data Set A

				No. of Inspections		
Plant	No. of Failed Snubbers	No. of Snubbers Inspected	Failure Proportion, %	Snubber Type Unknown	Hydraulic Snubber	Mechanical Snubber
Beaver Valley 1	23	221	10		1	
Big Rock Point 1	2	26	8			2
Brunswick 1	2	310	1		2	
Brunswick 2	145	783	19		3	
Calvert Cliffs 2	16	32	5		2	
Cook 1	19	156	12		2	
Cooper Station	6	200	3		1	
Crystal River 3	75	261	29		1	
Dresden 3	1	4	25		1	
FitzPatrick	57	230	25		1	
Fort Calhoun 1	25	184	14		2	
Ginna	2	8	25		1	
Hatch 1	45	61	74			1
Indian Point 2	38	125	30		2	
Millstone 1	2	10	20		1	
Millstone 2	54	152	36			2
Oconee 3	1	1	100	1		
Oyster Creek 1	12	99	12	1	1	
Quad Cities 2	7	24	29			1
Rancho Seco 1	52	198	26		4	
St. Lucie 1	4	214	2			2
Surry 1	47	199	24	2	1	
Surry 2	19	30	63	1		
Three Mile Island 1	45	259	17		1	
Turkey Point 4	20	20	100		1	
Zion 2	20	24	83		2	

TABLE 5.17. Snubber Failure Data by Failure Mode for Data Set A

Failure Mode	No. of Failed Snubbers	No. of Snubbers Inspected	Failure Proportion, %	No. of Failed Snubbers/No. Inspected: Snubber Type Unknown	Hydraulic Snubber	Mechanical Snubber
Unknown	3	88	3	3.18	4.50	1.67
Locked up	103	427	24	5.83	1.33	7.20
Out of tolerance	312	1363	23	7.00	11.27	4.75
Would not lock up	321	1953	16	1.95	4.08	1.75

TABLE 5.18. Snubber Failure Data by Failure Cause for Data Set A

Ultimate Failure Cause	No. of Failed Snubbers	No. of Snubbers Inspected	Failure Proportion, %	No. of Failed Snubbers/No. Inspected: Snubber Type Unknown	Hydraulic Snubber	Mechanical Snubber
Unknown	1	85	1	3.00	4.50	1.33
Design	74	176	42	1.75	8.02	11.36
Installation	11	67	16	2.30	2.73	1.70
Operation	653	3503	19	3.52	4.77	4.60

TABLE 5.19. Number and Proportion of Snubber Failures by Manufacturer for Data Set A

	Failure Cause				Failure Mode			
Manufacturer	Unknown	Design	Installation	Operation	Unknown	Frozen	Out of Tolerance	Would Not Lockup
Unknown	22 (1%)	104 (6%)	168 (10%)	1450 (83%)	45 (3%)	150 (9%)	648 (37%)	901 (52%)
Bergen-Paterson	--	425 (63%)	46 (7%)	207 (31%)	1 (1%)	1 (1%)	57 (8%)	619 (91%)
Blaw Knox	--	1 (25%)	3 (75%)	--	--	--	--	4 (100%)
ITT-Grinnell Corp.	--	256 (51%)	33 (7%)	217 (43%)	--	--	215 (42%)	291 (58%)
Pacific Scientific	3 (9%)	9 (27%)	6 (18%)	15 (45%)	3 (9%)	13 (39%)	3 (9%)	14 (42%)
Anchor-Holth	--	--	--	3	--	--	--	3
International Nuclear Safeguards Corp.	--	91	--	--	--	91	--	--
ITT Barton	--	--	--	1	--	--	--	1
McDowell Welmon	--	--	1	--	--	--	--	1
Power Piping Co.	--	--	--	1	--	--	--	1

TABLE 5.20. Snubber Failure Data by Year for Data Set A, Assuming a Snubber Population

Year	No. of Failures[a]	100/300[b] Snubber Plant	300/500 Snubber Plant	500/800 Snubber Plant	800/1000 Snubber Plant	1000/2000 Snubber Plant
1973	272	77.71	25.90	15.54	9.71	7.77[c]
1974	370	77.08	25.69	15.42	9.64	7.71
1975	78	13.68	4.56	2.74	1.71	1.37
1976	126	18.26	6.60	3.97	2.54	1.94
1977	164	19.29	7.63	4.62	3.04	2.19
1978	156	16.08	6.64	4.03	2.69	1.88
1979	146	14.17	5.96	3.62	2.43	1.68
1980	142	12.03	5.26	3.21	2.18	1.46
1981	406	32.74	14.71	8.98	6.19	4.06
1982	146	11.50	5.20	3.17	2.19	1.43
1983	133	9.78	4.49	2.75	1.91	1.23
Total	2139	21.41	8.81	5.35	3.56	2.50

(a) No "out-of-tolerance" failures are included.
(b) 100/300 means 100 snubbers in 1973-1976 and 300 snubbers in 1977-1983.
(c) Failures/1000 snubber-years of operation.

TABLE 5.21. Snubber Failure Data by Plant for Data Set A, Assuming a Snubber Population

Reactor	No. of Failures[a]	100/300 Snubber Plant[b]	300/500 Snubber Plant	500/800 Snubber Plant	800/1000 Snubber Plant	1000/2000 Snubber Plant
Arkansas 1	9	9.00	3.00	1.80	1.13	0.90[c]
Beaver Valley 1	1	0.42	0.25	0.16	0.13	0.06
Big Rock Point 1	9	8.18	2.73	1.64	1.02	0.82
Browns Ferry 1	62	62.00	20.67	12.40	7.75	6.20
Browns Ferry 2	29	32.22	10.74	6.44	4.03	3.22
Browns Ferry 3	6	2.86	1.71	1.07	0.86	0.43
Brunswick 1	44	20.95	12.57	7.86	6.29	3.14
Brunswick 2	218	242.22	80.74	48.44	30.28	24.22
Calvert Cliffs 1	8	8.89	2.96	1.78	1.11	0.89
Calvert Cliffs 2	12	5.71	3.43	2.14	1.71	0.86
Cook 1	13	14.44	4.81	2.89	1.81	1.44
Cook 2	4	2.22	1.33	0.83	0.67	0.33
Cooper Station	41	41.00	13.67	8.20	5.13	4.10
Crystal River	107	50.95	30.57	19.11	15.29	7.64
Davis-Besse 1	5	2.78	1.67	1.04	0.83	0.42
Diablo Canyon 1	8	--	--	--	--	--
Dresden 1	4	5.00	1.67	1.00	0.63	0.50
Dresden 2	22	20.00	6.67	4.00	2.50	2.00
Dresden 3	44	40.00	13.33	8.00	5.00	4.00
Duane Arnold	46	51.11	17.04	10.22	6.39	5.11
Farley 1	2	0.95	0.57	0.36	0.29	0.14
Farley 2	9	10.00	6.00	3.75	3.00	1.50
Fitzpatrick	16	17.78	5.93	3.56	2.22	1.78
Fort Calhoun 1	61	61.00	20.33	12.20	7.63	6.10
Fort St. Vrain	131	87.33	52.40	32.75	26.20	13.10
Ginna	6	5.45	1.82	1.09	0.68	0.55
Haddam Neck	4	10.00	3.33	2.00	1.25	1.00
Hatch 1	58	64.44	21.48	12.89	8.06	6.44
Hatch 2	5	3.33	2.00	1.25	1.00	0.50
Humboldt Bay	4	5.00	1.67	1.00	0.63	0.50
Indian Point 1	1	1.25	0.42	0.25	0.16	0.13
Indian Point 2	156	156.00	52.00	31.20	19.50	15.60
Indian Point 3	3	1.25	0.75	0.47	0.38	0.19
Kewaunee	2	2.00	0.67	0.40	0.25	0.20
LaSalle 1	25	--	--	--	--	--

TABLE 5.21. (contd)

Reactor	No. of Failures[a]	100/300 Snubber Plant[b]	300/500 Snubber Plant	500/800 Snubber Plant	800/1000 Snubber Plant	1000/2000 Snubber Plant
Maine Yankee	8	7.27	2.42	1.45	0.91	0.73[c]
McGuire 1	3	3.33	2.00	1.25	1.00	0.50
Millstone 1	93	84.55	28.18	16.91	10.57	8.45
Millstone 2	84	93.33	31.11	18.67	11.67	9.33
Monticello 1	55	50.00	16.67	10.00	6.25	5.00
Nine Mile Point 1	22	20.00	6.67	4.00	2.50	2.00
North Anna 1	11	6.11	3.67	2.29	1.83	0.92
North Anna 2	3	2.50	1.50	0.94	0.75	0.38
Oconee 1	8	7.27	2.42	1.45	0.91	0.73
Oconee 2	10	10.00	3.33	2.00	1.25	1.00
Oconee 3	2	2.00	0.67	0.40	0.25	0.20
Oyster Creek 1	133	120.91	40.30	24.18	15.11	12.09
Palisades	23	20.91	6.97	4.18	2.61	2.09
Peach Bottom 2	32	32.00	10.67	6.40	4.00	3.20
Peach Bottom 3	39	39.00	13.00	7.80	4.88	3.90
Pilgrim 1	22	20.00	6.67	4.00	2.50	2.00
Point Beach 1	2	1.82	0.61	0.36	0.23	0.18
Point Beach 2	2	1.82	0.61	0.36	0.23	0.18
Quad Cities 1	13	11.82	3.94	2.36	1.48	1.18
Quad Cities 2	28	25.45	8.48	5.09	3.18	2.55
Rancho Seco 1	48	53.33	17.78	10.67	6.67	5.33
Robinson 2	7	6.36	2.12	1.27	0.80	0.64
Salem 1	17	8.10	4.86	3.04	2.43	1.21
Salem 2	4	4.44	2.67	1.67	1.33	0.67
San Onofre 1	20	18.18	6.06	3.64	2.27	1.82
San Onofre 2	5	16.67	10.00	6.25	5.00	2.50
San Onofre 3	3	--	--	--	--	--
Sequoyah 1	3	3.33	2.00	1.25	1.00	0.50
Sequoyah 2	3	5.00	3.00	1.88	1.50	0.75
St. Lucie 1	9	3.75	2.25	1.41	1.13	0.56
Summer 1	3	--	--	--	--	--
Surry 1	30	27.27	9.09	5.45	3.41	2.73
Surry 2	45	40.91	13.64	8.18	5.11	4.09
Three Mile Island 1	37	37.00	12.33	7.40	4.63	3.70
Three Mile Island 2	2	2.22	1.33	0.83	0.67	0.33

TABLE 5.21. (contd)

Reactor	No. of Failures[a]	100/300 Snubber Plant[b]	300/500 Snubber Plant	500/800 Snubber Plant	800/1000 Snubber Plant	1000/2000 Snubber Plant
Trojan	1	0.42	0.25	0.16	0.13	0.06[c]
Turkey Point 3	34	30.91	10.30	6.18	3.86	3.09
Turkey Point 4	30	27.27	9.09	5.45	3.41	2.73
Vermont Yankee 1	9	8.18	2.73	1.64	1.02	0.82
Zion 1	22	20.00	6.67	4.00	2.50	2.00
Zion 2	39	39.00	13.00	7.80	4.88	3.90
Total	2139	21.41	8.81	5.35	3.56	2.50

(a) No "out-of-tolerance" failures are included.
(b) 100/300 means 100 snubbers in 1973-1976 and 300 snubbers in 1977-1984.
(c) Failures/1000 snubber-years of operation.

TABLE 5.22. Snubber Failure Data by Failure Mode for Data Set A, Assuming a Snubber Population

Failure Mode	No. of Failures	100/300[a] Snubber Plant (99.9)[b]	300/500 Snubber Plant (242.9)	500/800 Snubber Plant (400.1)	800/1000 Snubber Plant (600.4)	1000/2000 Snubber Plant (857.0)
Unknown	49	0.49	0.20	0.12	0.08	0.06
Locked up	255	2.55	1.05	0.64	0.42	0.30
Out of tolerance	923	9.24	3.80	2.31	1.54	1.08
Would not activate	1835	18.37	7.55	4.59	3.06	2.14
Total	3062	30.65	12.61	7.65	5.10	3.57

(a) Failures/1000 snubber-years of operation.
(b) Total number of snubber years of operation for each scenario measured in units of 1000 snubber-years.

TABLE 5.23. Snubber Failure Data by Failure Cause for Data Set A, Assuming a Snubber Population

Failure Mode	No. of Failures	100/300[a] Snubber Plant (99.9)[b]	300/500 Snubber Plant (242.9)	500/800 Snubber Plant (400.1)	800/1000 Snubber Plant (600.4)	1000/2000 Snubber Plant (857.0)
Unknown	25	0.25	0.10	0.06	0.04	0.03
Design	886	8.87	3.65	2.21	1.48	1.03
Installation	257	2.57	1.06	0.64	0.43	0.30
Operation	1894	18.96	7.80	4.66	3.15	2.21
Total	3062	30.65	12.61	7.65	5.10	3.57

(a) Failures/1000 snubber-years of operation.
(b) Total number of snubber years of operation for each scenario measured in units of 1000 snubber-years.

6.0 PERSONNEL EXPOSURE TRENDS

The following section is a synthesis of actual radiation exposure data occurring during the maintenance and testing of snubbers, plus exposure occurring during the ISI of piping and other components in nuclear reactor systems. The data are insufficient to permit statistical analyses; therefore, only qualitative trends are possible (see Table 6.1).

The advantages and disadvantages of snubbers with emphasis on the value of flexible systems are discussed in NUREG/CR-2136.[a] The impact of removing half of the snubbers from relatively new BWRs and PWRs is postulated. A basic assumption is that the more flexible systems will have a 25% lower probability of failure. The vital statistics of the two classes of plants are shown in Table 6.2. This table has been included for information only, and no attempt has been made to validate it.

TABLE 6.1. Personnel Exposure Data

Plant	Reactor Type	Initial Criticality	No. of Snubbers	Occupational Exposure Tests, rem	
				100% Visual	Functional
H. B. Robinson	PWR	9-20-70	20	0.50	Combined
Maine Yankee	PWR	10-23-72	75	3.6	Combined[a]
Calvert Cliffs 1	PWR	10-07-74	352	0.30	0.10[b]
Monticello	BWR	12-10-70	92	0.31	1.0 est.
Vermont Yankee 1	BWR	3-24-72	50	1.2	Combined
Cooper Station	BWR	2-21-74	269	0.50[c]	NA

(a) 41 snubbers tested.
(b) 33 snubbers tested.
(c) Dosage received each time on two inspections of dry well snubbers (5/75; repairs on 5/76).

(a) Landers, D. F., R. D. Hookway, and K. D. Desai. 1981. Effects of Postulated Event Devices on Normal Operation of Piping Systems in Nuclear Power Plants. NUREG/CR-2136, Teledyne Engineering Services, Waltham, Massachusetts.

TABLE 6.2. Relevant Snubber Data in NUREG/CR-2136

	PWR	BWR
Average snubbers per plant	800	950
50% of the snubbers removed	400	475
Removal time for average snubber, man-hour	6	6
Removal time per plant, man-hour	2,400	2,850
Assumed exposure/snubber during removal, R/h	0.25	0.25
Exposure per plant, man-rem	1100	1100
Annual man-hour savings because removed snubbers do not need to be examined	300	360
Improved ISI due to removed snubbers, man-hour	410	580
Maintenance and repair savings, man-hour	400	480
Cumulative savings, man-hour	1,100	1,420
Exposure savings/year for operation and maintenance, man-rem	278	385

The preceding numbers can be adjusted for all plants now operating. For example, at the time of this study, 41 PWRs and 16 BWRs were operating. If a simplistic assumption is made that all classes of plants have the same number of snubbers and exposure per hour, a value of 6.8×10^4 man-rem is obtained for the removal of 50% of the snubbers from all plants. Similarly, the annual savings would be about 1.5×10^4 man-rem.

Similar calculations can be made for plants under construction in terms of man-hours for removal and savings in exposure. In 1981, 43 PWRs and 20 BWRs were under construction. Obviously, these numbers have changed over the past several years. A prerequisite to removing snubbers is a prior analysis to reestablish the design base; this analysis would require about 10,000 man-hours per plant.

In early 1984, three utilities provided exposure information on their plants over a period of years. One utility provided exposure figures covering the maintenance and testing (5%) and removal and reinstallation (95%) of snubbers on three plants. The following is a tabulation of annual exposure:

Annual Exposure Related to Snubbers, man-rem

Year	Plant 1	Plant 2	Plant 3	Total
1983	47	42	29	118
1982	29	9	4	42
1981	122	56	9	187
1980	65	42	105	212
1979	8	9	0	17
Total	271	158	147	576

Another utility provided similar data for two plants for annual snubber testing and maintenance.

Year	Annual Exposure Related to Snubbers, man-rem	
	Plant 4	Plant 5
1983	34	No data
1982	75	1.0
1981	158	0.1
1980	No data	1.0
1979	No data	1.0
1978	No data	2.0

A third utility provided data on one plant in its first cycle of operation. The cumulative exposure was less than 1 man-rem for 100% visual inspection and 10% functional testing. These figures may be representative of a new plant; however, they should be different for older plants.

Exposure incurred in the NDE of welds or in the replacement of piping should be reasonably representative of snubber maintenance and testing. Data from the recent BWR intergranular stress corrosion cracking incidents were used for comparison. Exposures incurred during both examination and removal were collected from several sources and are summarized in Table 6.3. These data were presented at a Committee on the Safety of Nuclear Installations-sponsored meeting related to intergranular stress corrosion cracking and have not been published.

TABLE 6.3. Exposure Values (in man-rem) Cited by Country for BWRs in Past 2 to 3 Years

Country	NDE	Replacement	Comments
U.S.	0.5 to 0.75/weld	<2000/plant	Replacement assumed
Japan	3.8 to 4.5/recirculation weld	752	Fukushima
		141	Tokai 2
			Man-rem/h Recirculation loop: 100 to 300 Reactor water cleanup: 200 to 700 Reactor heat removal: 100 to 400 Reactor pressure vessel nozzle: 20 to 10,000
Sweden	22.5/plant	91	Plus 18 for isolation, etc., or 130 total
Italy	120/1 plant (Garigliano)		60 for support activities
	1984 85 Caorso		145 estimated
	1983 16 Caorso		18
	1981 6.5 Caorso		26
Finland	TVO / Loviisa	TVO / Loviisa	
	1983: 90 / 130	1982: 100 / 230	
	1981: 60 / 110	1980: 50 / 220	
	1979: 20 / 140	1978: 3 / 110	
Switzerland	2.2 to 3/weld 1.1 to 1.5/weld repeat	30? per weld?	
Spain	30/plant	27 repair	53 auxiliaries?
Germany		Plant B 170 Plant C 570 Plant E 650	Includes dismantling (20% to 30%), construction (45% to 65%), inspection (5% to 10%), miscellaneous (10% to 15%). Typical collective dose/plant is 400 to 500 man-rem.

7.0 COSTS AND VALUE-IMPACT

The information in Section 7.1 was gathered during a preliminary study conducted in 1982-1983. The data are presented to show the diversity and range of information that has been compiled in the literature. The data are typically presented in the raw or "as-reported" form, and no attempt was made to justify the data. In Section 7.2, selected data are organized in a consistent format to enable a value-impact analysis to be performed.

7.1 PRIOR VALUE-IMPACT STUDIES

The following information was supplied in response to the draft Regulatory Guide on snubber testing; no attempt has been made to confirm or validate the information:

- snubber costs: 1,000 to 10,000 lb — $1000 to $2000
  10,000 to 20,000 lb — $2000 to $2500
  20,000 to 30,000 lb — $2500 to $3000+
  30,000 to 50,000 lb — $3000 to $6000
- installation costs per snubber — $16,000
- annual maintenance inspection costs:
  650-snubber plant — $250,000
  1000-snubber plant — $1,000,000

One source compares two plants as follows:

- Plant A - 10 years old. All hydraulic snubbers. Inspected every 6 months, requiring 600 man-hours plus 20 man-hours to reinspect questionable snubbers. Maintenance and inspection costs for a 1000-snubber plant were $1,000,000 per year or about $1000/snubber. Assumed that enough snubbers were stockpiled to permit replacement without extended shutdown.
- Plant B - 6 years old. A mix of hydraulic and mechanical snubbers (650). Maintenance and repairs costs per year estimated to be $250,000 with about 150 man-hours for 100% inspection per year.

It should be emphasized that these numbers were provided by individual utilities as rough estimates only. Therefore, care should be taken when extending these costs to other plants. This fact becomes evident in the maintenance and inspection costs cited above. The older plant (all hydraulic snubbers) reports an annual maintenance and inspection cost of $1000/snubber.

The newer plant (mixture of hydraulic and mechanical snubbers) reports an annual maintenance and inspection cost of only $385/snubber. There are several possible explanations for this difference in costs; however, a probable factor is the early problems that hydraulic snubbers had with polyurethane seals. Although the seal problem has apparently been alleviated, the earlier high failure rates for hydraulic snubbers may still impact the inspection and replacement schedules for older plants.

In NUREG/CR-2136, three plants were examined with regard to snubbers. A figure relevant to value-impact is the estimate pertinent to removal, testing, and rebuilding. It was estimated that two 4-man crews would spend a 12-h shift to remove 8 snubbers; a 2-man crew could test and rebuild about 12 snubbers per shift. Thus, about 13 man-hours per snubber would be required for removal, testing, rebuilding, and replacement. In terms of exposure, each man would spend about 1.5 h in a field of 250 millirem/h, which would amount to 375 millirem/man.

A Battelle, Pacific Northwest Laboratories study assessed the implication of removing some snubbers as an end product of a decoupling loss-of-coolant accident plus a safe shutdown earthquake. The implications of reducing snubbers appears to be quite arbitrary. For example, such reductions in numbers were assumed to reduce the probability of pipe failure by 25%, which probably has no basis in fact.

Miscellaneous cost and quantity estimates relevant to snubbers are compiled in Table 7.1. The information in Table 7.1 (which is an expansion of Table 6.2) was drawn from various sources, primarily NUREG/CR-2136, NUREG/CR-2800,[a] and NUREG-0933.[b] A "typical" PWR containing 800 snubbers and a "typical" BWR containing 950 snubbers cited in NUREG/CR-2136 were used. A removal time of 6 man-hours/snubber was assumed. Pipe restraints (100 per PWR and 140 per BWR) were also considered; pipe restraint removal was assumed to require 40 man-hours.

At best, the figures in Table 7.1 are averaged estimates; however, there are obvious trends related to reduced exposure for snubber testing as well as fewer snubbers and restraints. Results would depend on a particular model and the age of that model. For example, testing of an older hydraulic snubber containing the early type of seals would confirm that they degrade rapidly; however, active programs on hydraulic snubbers resulted in regular changes in seal materials and any conclusions drawn would be invalid for current snubbers. A similar situation could exist with mechanical snubbers. Those of one

(a) Andrews, W. B., et al. 1983. Guidelines for Nuclear Power Plant Safety Issue Prioritization Information Development. NUREG/CR-2800, PNL-4297, Pacific Northwest Laboratory, Richland, Washington.
(b) Emrit, R., et al. 1983. A Prioritization of Generic Safety Issues. NUREG-0933, U.S. Nuclear Regulatory Commission, Washington, D.C.

TABLE 7.1. Value-Impact Data for Snubbers

Assumptions	PWR	BWR
50% of pipe snubbers removed	400	475
50% of pipe restraints removed	50	70
Snubber removal time, man-hours	2,400	2,800
Restraint removal time (above backfit; forward fit represents similar savings), man-hours	2,000	2,800
Exposure per plant, man-rem	1,100	1,400
Man-hour savings/year from changes:		
For in-service testing	300	360
For pumps and valves (restraints)	410	580
Maintenance/repair	400	480
Piping reanalysis item (backfit plants), man-hours	10,000	10,000
Overall design and incorporation (50 h/week), man-hours	18,000	12,500
Cost savings from removal/plant (assumes savings of about $10,000/snubber or restraint):		
Backfit plants	8.2×10^5	8.9×10^5
Forward fit plants	4.5×10^6	5.2×10^6
Improved in-service testing and maintenance	$53,800/yr	$69,000/yr
Man-rem savings/year:		
Operation and maintenance	280	390
Improved in-service testing[a]	1,100	1,400

(a) May be for plant life.

manufacturer did not operate correctly from initial installation; however, extrapolation to other manufacturers is not justified because the failure behavior was unique to one company.

A collection of cost data was provided in response to the request for comments to the draft Regulatory Guide. Not all people agree that the costs

cited for testing snubbers will be so high. Because of their variability and incompleteness, they are not cited here.

A recent paper[a] cites cost factors on hydraulic snubbers using ethylene-propylene seals. The authors examined the economic impact of the snubber testing program in the Technical Specifications. Assuming $250,000/day power replacement costs for the 690-MWe plant and outages of 2.5 to 3 days, costs were estimated at $325,000 to $500,000 for the testing phase. The utility estimates personnel exposure costs of $6000/man-rem, which is higher than some other utilities. Costs of rebuilding and testing snubbers were set at $4500/snubber. This BWR has substantial changes in ambient temperature, depending on location. For example, the impact on seal life as a function of temperature is: 150°F, ~10 years; 200°F, ~3 years; and 250°F, ~1.5 years. These values indicate that relocating snubbers may have substantial cost advantages.

7.2 VALUE-IMPACT ANALYSIS

This value-impact analysis examines the per unit costs associated with snubbers installed at nuclear power plants. Due to the limited available data, the costs used in this analysis must be regarded as rough estimates. The cost of snubbers over the expected operating life of the plant is evaluated, and the impact of reducing the number of these dynamic restraints is briefly discussed.

7.2.1 Snubber Unit Costs

The costs that are considered in this analysis include:

- initial or capital cost
- installation cost
- inspection and maintenance costs
- employee exposure cost.

All costs are reduced to unit costs using weighted averages to account for cost variations due to snubber size and type differences. When evaluated on a per unit basis, cost savings that may result from manufacturer quantity discounts, increased efficiency, and learning curve effects are ignored. For this analysis, these costs will be considered variable (i.e., directly proportional to the number of units.) This approach will provide a good estimate of the direct

(a) Roberts, K., R. N. Kelly, and T. R. Branca. 1983. "Overview of a Comprehensive Snubber Surveillance Program Implemented at the Pilgrim Nuclear Power Station." Presented at 6th International Conference on NDE in the Nuclear Industry, November 28-December 2, 1983, Zurich, Switzerland.

cost associated with increasing or decreasing the number of snubbers at a nuclear plant and is consistent with the overall accuracy of the rest of the analysis.

Capital Cost

To estimate the initial cost of snubbers, letters were sent to the 62 foreign and domestic companies listed under "SNUBBERS" in the Nuclear News Buyers Guide 1984,[a] requesting vendor data. A copy of the letter is shown in Figure 7.1. Responses were received from 18 domestic companies and 5 foreign companies. Of these 23 responses, 16 indicated that they did not manufacture snubbers. The seven remaining companies are listed in Table 7.2. These five domestic firms and two foreign firms provided data on a total of 75 snubber models (Table 7.3). One manufacturer estimated the size distribution of snubbers in nuclear power plants to be as shown in Table 7.4. Using the data from Tables 7.3 and 7.4, the estimated average per unit capital cost is $3,250, using a simple weighted average cost.

An inventory of spare snubbers is typically maintained to minimize the risk and duration of unscheduled plant outages due to snubber failures. The inventory cost may be considered a part of the capital cost for the in-place snubbers. An inventory of 30% raises the total capital cost per snubber to $4,225. Warehousing and incremental administrative costs for maintaining a spare inventory will be ignored in this analysis.

Installation Cost

Because snubbers are dynamic devices, installation requires more effort to ensure proper placement and alignment. Improper installation has been a major cause of snubber failures. It has been estimated that 200 man-hours are required to install a typical snubber. A burdened labor rate of $25/h[b] (based on Meane's Guide to Labor Rates in the Construction Industry-Pipe Fitters) results in an installation cost of $5,000/snubber. This study ignores ancillary costs (such as special tooling requirements) because it was felt that they were beyond the accuracy of the analysis.

Inspection and Maintenance Costs

The costs associated with inspection and maintenance of snubbers in two plants were given in "Snubber Cost and Test Information" (Guzy June 4, 1982). One of the plants had only hydraulic snubbers, and the second had both mechanical and hydraulic snubbers. The second plant appears to be more typical in quantity of snubbers (650) and incorporates both types of snubbers. Therefore,

(a) Volume 27, No. 4.
(b) Discussions with an engineer for the Washington Public Power Supply System indicated that this value may be low by as much as a factor of two.

Battelle
Pacific Northwest Laboratories
P.O. Box 999
Richland, Washington U.S.A. 99352
Telephone (509)
Telex 15-2874

October 4, 1984

Dear Mr.

Battelle-Northwest has undertaken a project for the United States Nuclear Regulatory Commission that involves gathering data on snubbers currently available to the U.S. commercial nuclear power industry. Data from the major manufacturers of snubbers will be assimilated to provide a data base of equipment characteristics and suppliers.

To assist us in this project, and to have your equipment included in the data base, please send information describing your snubber product line, including load capacities and prices to:

Battelle, Pacific Northwest Laboratories
P. O. Box 999
Richland, Washington 99352

Attn: Ryan E. Dodge
Research Engineer

We appreciate your assistance in this effort and look forward to hearing from you in the near future.

Sincerely,

Ryan E. Dodge
Research Engineer

RED:ri

FIGURE 7.1. Sample Letter Sent to 62 Companies Requesting Snubber Information

TABLE 7.2. Snubber Manufacturers Responding to Request for Information

Manufacturer	Address
Bergen-Paterson Pipe Support Corp. (BPPC)	74 Commerce Way P.O. Box 4011 Woburn, MA 01888
Lisega-Kraftwerkstechnik GmBH (LIS)	Postfach 1340, D-2730 Zeven, Germany
Western Piping & Engineering Co., Inc. (WP&E)	1485 Yosemite Avenue San Francisco, CA 94124
Sanwa Tekki Corporation (STC)	6-5-19, Minami Shinagawa-ku Tokyo, Japan
Paul-Munroe Energy Products (PMEP)	1701 W. Sequoia Ave. P.O. Box 5900 Orange, CA 92667
Anchor/Darling Industries, Inc. (ADII)	Wambold Rd. P.O. Box 300 Kulpsville, PA 19443
Pacific Scientific - Kin Tech Division (PSA)	1346 S. State College Blvd. Anaheim, CA 92803

data from that plant were used in this analysis. The plant reported a total cost of $250,000/year for inspection and maintenance of 650 snubbers ($385/snubber/year). When reducing the total cost to a per unit cost, it may be helpful to think of the reduced value as the sum of the inspection costs and the average maintenance costs times the probability of requiring maintenance for a single snubber.

Employee Exposure Costs

It is difficult to associate dollar costs with increased employee exposure. The actual costs that might be incurred due to worker "burn up," long-term medical expenses, and unfavorable public opinion are ambiguous and not amenable to quantification. A rule of thumb that is often used to evaluate the cost effectiveness of implementing exposure mitigation measures is that a $1,000/man-rem reduction in exposure is cost effective (see, for example, 10 CFR 50, Appendix I). Determining the appropriate cost to assign to employee exposure is certainly a subjective process. However, it is important to recognize employee exposure as a true cost to the utility and to include it in the value-impact analysis. The $1,000/man-rem rule of thumb is reasonably

TABLE 7.3. Manufacturer Data on Snubbers

Model	Manufacturer[a]	Load, lb	Type[b]	Stroke, in	Price, $
AD-40	ADII	400	M	3	790
AD-70	ADII	700	M	4	815
AD-150	ADII	1,500	M	4	1,200
AD-500	ADII	5,000	M	5	1,565
AD-1600	ADII	16,000	M	6	1,860
AD-5500	ADII	55,000	M	6	6,100
AD-12,500	ADII	125,000	M	6	11,160
PMH 2101	PMEP	1,000	H	5	NA(c)
PMH 2103	PMEP	3,000	H	5	NA
PMH 2200	PMEP	10,000	H	5	NA
PMH 2300	PMEP	35,000	H	5	NA
PMH 2400	PMEP	53,000	H	5	NA
PMH 2500	PMEP	105,000	H	5	NA
SMS-01K	STC	110	M	4	575
SMS-04K	STC	400	M	4	600
SMS-1K	STC	1,000	M	4	625
SMS-3K	STC	3,000	M	4	815
SMS-9K	STC	9,000	M	4	865
SMS-16K	STC	16,000	M	4	1,205
SMS-25K	STC	25,000	M	4	2,140
SMS-40K	STC	40,000	M	4	2,745
SMS-65K	STC	65,000	M	4	3,790
SMS-100K	STC	100,000	M	4	7,400
SMS-160K	STC	160,000	M	4	12,400
SMS-250K	STC	250,000	M	4	18,400
WPE 50	WP&E	50,000	M	6	NA
WPE 100	WP&E	120,000	M	6	NA
WPE.35	WP&E	350	M	4	NA
WPE.65	WP&E	650	M	2.5	NA
WPE 1.5	WP&E	1,500	M	4	NA
WPE 6.0	WP&E	6,000	M	5	NA
WPE 15	WP&E	15,000	M	6	NA
303251	LIS	1,800	H	5.9	NA
304251	LIS	3,600	H	5.9	NA
305251	LIS	7,200	H	5.9	NA
306251	LIS	22,500	H	5.9	NA
307251	LIS	45,000	H	5.9	NA
308251	LIS	78,700	H	5.9	NA
309259	LIS	112,400	H	5.9	NA
300259	LIS	225,000	H	5.9	NA
322259	LIS	900	M	5.9	NA
323253	LIS	1,800	M	5.9	NA

TABLE 7.3. (contd)

Model	Manufacturer[a]	Load, lb	Type[b]	Stroke, in.	Price, $
325251	LIS	7,200	M	5.9	NA
326251	LIS	22,500	M	5.9	NA
311153	LIS	281,000	H	3.93	NA
312153	LIS	562,000	H	3.93	NA
313153	LIS	843,000	H	3.93	NA
2500-3-6	BPP	3,000	H	6	3,355
2500-10-6	BPPC	10,000	H	6	3,590
2500-20-6	BPPC	20,000	H	6	4,964
2500-30-6	BPPC	30,000	H	6	5,619
2500-50-6	BPPC	50,000	H	6	8,236
2525-3-6	BPPC	3,000	H	6	3,624
2525-10-6	BPPC	10,000	H	6	3,880
2525-20-6	BPPC	20,000	H	6	5,303
2525-30-6	BPPC	30,000	H	6	6,173
2525-50-6	BPPC	50,000	H	6	9,278
2530-3-6	BPPC	3,000	H	6	3,874
2530-10-6	BPPC	10,000	H	6	4,222
2530-20-6	BPPC	20,000	H	6	5,887
2530-30-6	BPPC	30,000	H	6	6,776
2530-50-6	BPPC	50,000	H	6	11,098
PSA 1/4	PSA	350	M	4	845
PSA 1/2	PSA	650	M	2.5	870
PSA 1	PSA	1,500	M	4	1,276
PSA 3	PSA	6,000	M	5	1,665
PSA 10	PSA	15,000	M	6	1,975
PSA 35	PSA	50,000	M	6	6,473
PSA 100	PSA	120,000	M	6	11,838

(a) See Table 7.2 for manufacturer names.
(b) M - mechanical; H - hydraulic.
(c) NA - not available.

TABLE 7.4. Estimated Size Distribution of Snubbers

Size, kips	% of Snubbers
1	8
3	40
10	28
25	10
45	5
70	3
110	2
200 to 2000	4
	100

conservative and provides consistency with some other published reports. This number was therefore used in this analysis to quantify the exposure costs relevant to snubbers.

Employee exposure presents an additional level of uncertainty into the analysis. As before, the direct costs must be estimated. In addition, the number of snubbers to be inspected must be estimated.

Table 6.2 indicates an average removal time of 6 man-hours per snubber and an average exposure level of 0.25 rem/h during removal.[a] If it is assumed that a similar effort is required to reinstall snubbers, then the average exposure for removing and replacing a single snubber is 3.0 man-rem.

However, not every snubber will need to be removed for inspection. A simplified version of the testing schedule outlined in ASME/ANSI OM4 is used in this analysis to estimate the fraction of snubbers that would be inspected each year. It was assumed that 10% of the snubbers must be inspected each year. If a failed snubber is found, it must be repaired or replaced; and a second sample of 10% must be inspected.[b] If a failed snubber is found in the second sample, it must be repaired or replaced; and another sample of 10% must be inspected. This sampling inspection is repeated until a sample passes inspection with no failures or all snubbers have been inspected.

The average sample size each year may then be estimated as:

$$S = \sum_{i=1}^{\infty} f^{i-1} (xN)^{i}$$

where x = sample size = 10%
N = total snubber population at a given plant
f = failure rate/snubber/year.

Several assumptions and simplifications are incorporated into the above estimate including:

- failures occur randomly
- samples are chosen randomly

(a) Discussions with an engineer for the Washington Public Power Supply System indicated that this man-hour estimate may be high by as much as a factor of two.
(b) A proposed revision to ANSI/ASME OM4 would require a reinspection sample size of half the original sample size (or 5%).

- impact of failures found in preceding samples are not taken into account.

A mean failure rate of 1.91 failures/1000 snubbers/year is given in Table 5.20 for 1983, assuming a population of 800 to 1000 snubbers per plant. Using an annual per snubber failure rate of f = 0.00191 and population, the average annual sample size is approximately 124 snubbers (12.4%). The resulting annual exposure rate per snubber can therefore be estimated as the product of the average exposure per snubber removed times the average sample size (3.0 x 0.124), giving an annual exposure rate of 0.37 man-rem/snubber/year. Using the $1000/man-rem rule of thumb discussed earlier, the exposure cost would be $370/snubber/year.

Unit Cost Over the Operating Life of the Plant

The snubber unit costs over the operating life of a new plant may be calculated using the preceding cost estimates. A plant operating life of 40 years will be assumed and the present value of the cash flow will be evaluated using discount rates of 2%, 5%, and 10% (Table 7.5).

TABLE 7.5. Summary of Snubber Costs Assuming a 40-Year Plant Life and Discount Rates of 2%, 5%, and 10%

Cost Category	2% Real Discount Rate		
	Cost, $	Timing	Total Cost, $
Capital cost	4,225	0	4,225
Installation cost	5,000	0	5,000
Inspection/maintenance costs	385	Annual	10,532
Employee exposure cost	370	Annual	10,122
Total			29,879

	5% Real Discount Rate		
	Cost, $	Timing	Total Cost, $
Capital cost	4,225	0	4,225
Installation cost	5,000	0	5,000
Inspection/maintenance costs	385	Annual	6,606
Employee exposure cost	370	Annual	6,349
Total			22,180

	10% Real Discount Rate		
	Cost, $	Timing	Total Cost, $
Capital cost	4,225	0	4,225
Installation cost	5,000	0	5,000
Inspection/maintenance costs	385	Annual	3,765
Employee exposure cost	370	Annual	3,618
Total			16,608

Based on the estimates and assumptions discussed in this report, the total discounted cost per snubber over the operating life of a reactor is between $29,879 and $16,608, depending on the applied discount rate. For a plant using 1000 snubbers, the total cost of the installed snubber would be from $16 to $30 million.

Other Factors

The risk of increasing the number or length of plant outages is another factor that impacts the total cost of snubbers. The NRC has stated that when inoperable snubbers are found they must be replaced in a timely fashion or the plant must be shut down. In addition, the various inspection schedules proposed generally require testing more samples at shorter intervals when inoperable snubbers are found. These schedules could conceivably require testing all snubbers in a plant. For a nuclear plant designed with 1000 snubbers, such a requirement could represent a sizable endeavor. With an approximate cost of $1,000,000 per day for plant shutdown, any downtime imposed due to snubber inoperability would seriously impact the above analysis.

The potential for failed and locked snubbers to cause a pipe failure was another factor that was not considered in this analysis. The potential for damage to the plant and/or for plant shutdown could result in very high costs.

A factor that could decrease the estimated snubber costs is the advent of in situ testing equipment for snubbers. Although several manufacturers are currently offering such equipment, in situ testing has not yet been approved by NRC.

7.2.2 Reducing the Number of Snubbers

Much attention has been given to the possibility of decreasing the number of snubbers used in nuclear power plants. The number of snubbers could be reduced through increased attention to design and through a relaxation in design requirements. Several studies, including recent work by Lu and Chou[a] at LLNL, have indicated that appropriately decreasing the number of snubbers in use at nuclear power plants may actually increase piping reliability.

Savings from Reducing the Number of Snubbers

Since the above analysis was done on a per snubber basis, cost savings attributable to snubber reductions can be evaluated directly. For example, if a proposed plant with 1000 snubbers were to reduce the number of snubbers by

(a) Lu, S. C., and C. K. Chou. 1984. Reliability Analysis of Stiff Versus Flexible Piping - Interim Project Report. NUREG/CR-3718, Lawrence Livermore National Laboratory, Livermore, California.

30%, a cost savings of $9,732,900 would be indicated. However, this savings would be expected only for plants not yet designed or built because no redesign or backfit costs have been considered.

Cost of Reducing the Number of Snubbers in Existing Plants

For backfit applications, the cost of redesigning and implementing a more flexible system must be estimated and then subtracted from the predicted cost savings. The cost of backfitting plants to reduce the number of snubbers has been estimated to be from $820,000 to $890,000 per plant. This cost does not include the increased employee exposure that would result from repiping and removing unnecessary snubbers. However, this exposure rate might be expected to be on the same order as that incurred from inspecting and maintaining a snubber (estimated to be 2.5 man-rem/snubber). As before, the $1000/man-rem rule of thumb was used to quantify this cost. The cost savings would be $2,500/snubber for each snubber eliminated.

Present Value of Reducing the Number of Snubbers

In a plant containing 1000 snubbers, a 30% reduction in the number of snubbers could be expected to result in a total cost reduction of from $526,000 to $3,500,000 (Table 7.6). All of the previous caveats regarding the impact of hidden costs such as increased plant downtime or damage to piping still apply. The exposure/implementation costs were obtained by multiplying the unit cost ($2,500) by the reduction in snubbers (300).

In Situ Testing

The implications of in situ testing of large snubbers that are not amenable to removal have been recognized in the context of value-impact. Information on in situ testing is currently being compiled and evaluated.

TABLE 7.6. Estimated Cost Savings Resulting from Reducing the Number of Snubbers in an Existing Plant[a]

Cost Category	Cost, $	Timing	Total Costs, $ 2% Discount Rate	5% Discount Rate	10% Discount Rate
Capital	0	--	0	0	0
Implementation	855,000	0	855,000	855,000	855,000
Inspection/maintenance	(115,100)	Annual	(2,577,832)	(769,369)	(1,085,038)
Exposure/implementation	750,000	0	750,000	750,000	750,000
Exposure savings	(111,000)	Annual	(2,486,007)	(1,706,342)	(1,046,388)
Total			(3,458,839)	(1,870,711)	(526,426)

(a) The following assumptions were used: 30-year remaining plant life; 2% real discount rate; 300 unit reduction in snubbers (and a representative population).

7.2.3 Increasing Snubber Reliability

The savings that may be realized through improved snubber reliability can be estimated, or, equivalently, the sensitivity of the current analysis to the estimated mean failure rates may be investigated.

Reducing the mean failure rate for snubbers will primarily impact the average sample size that must be inspected. In the preceding section, an average sample size of 1.8% was estimated for a mean failure rate of 0.0036. If the mean failure rate is reduced by 25% and 50% (to 0.0027 and 0.0018, respectively), then the corresponding sample sizes may be calculated (Table 7.7).

The average sample size should impact the inspection/maintenance and employee exposure costs directly. If these costs are scaled directly with the sample size, the net present value of the total costs of snubbers can be estimated assuming a 40-year plant life. These results are shown in Table 7.8.

TABLE 7.7. Average Total Sample Size for Specified Mean Failure Rates

Mean Failure Rates	Nominal Sample Size, %	Assumed Snubber Population	Average Sample Size, %
0.0036	10	900	14.8
0.0027	10	900	13.2
0.0018	10	900	11.9

TABLE 7.8 Summary of Net Present Value of Snubber Costs for Various Mean Failure Rates

Cost Category	Timing	Assumed Failure Rate		
		0.0036	0.0027	0.0018
Capital	0	4,225	4,225	4,225
Installation	0	5,000	5,000	5,000
Inspection/Maintenance	Annual	385	343	310
Exposure	Annual	370	330	298
Net Present Value, 2%, 40-yr life		29,879	27,635	25,857
Net Present Value, 5%, 40-yr life		22,180	20,773	19,658
Net Present Value, 10%, 40-yr life		16,608	15,806	15,171

8.0 IMPLICATIONS OF AGING AND DEGRADATION OF SNUBBERS

A review of Tables 5.3, 5.4, and 5.5 reveals the large number of failure mechanisms, many of which are related to aging/degradation. In the case of hydraulic snubbers, several of the failure mechanisms result in a loss of fluid and a consequent loss of function. This occurrence will be a fail-safe mode in that there should be no lockup and overstressing of the pipe. Based on early arguments on flexible versus stiff piping, the lack of operation of hydraulic snubbers during a seismic event should have limited effects. Whether the same can be said concerning more severe dynamic loads depends on analysis or testing. It can be concluded that the loss of function of some hydraulic snubbers should have a limited effect on the probability of failure of piping during a seismic event (see Section 1).

With mechanical snubbers, the situation is not as clear. One obvious aging/degradation mechanism--corrosion of internals over a period of time--has been known to lead to loss of function and lockup. In this instance, the situation is not fail-safe; and mechanical snubbers located in regions of high thermal expansion of piping during heatup and cooldown may severely stress snubbers or piping or both. If sufficiently high stresses occur, the snubber may be torn from the wall or the pipe may be damaged. In regions of lower thermal expansion, the locked up snubber may exist for a substantial time. If a dynamic load occurs, the snubbers will behave as rigid members and they or the pipe may be damaged. Mechanical snubbers have locked up without being detected for several days or weeks. Obviously, this condition is not desirable.

Several utilities have extensive snubber replacement programs, replacing one form of hydraulic for another or replacing mechanical for hydraulic. Thus, the age factor cannot be quantified using an assumption that the same snubbers were originally in the system. The same can be said for seals and seal materials in hydraulic snubbers where several changes have occurred in original materials as well as replacement materials.

Obvious degradation mechanisms include seal aging in hydraulic snubbers and vibrations in mechanical snubbers. Several load conditions, such as water and steam hammer or valve closure, can render snubbers inoperable. Under these conditions, loss of function can occur whether the snubbers are new or old.

The following paragraphs represent suggested actions that could, in the opinion of the authors, improve the status of snubbers. These suggestions should not be considered to be current ASME or NRC positions.

If the following three questions can be answered affirmatively, there is some assurance that snubbers will function as desired:

- Has an adequate inspection program been conducted to assure that the snubbers functioned correctly when installed?

- Has there been an appropriate environmental qualification program carried out that establishes the aging/degradation mechanisms in snubbers or the anticipated life span before loss of function?

- Does an adequate ISI and testing program exist to permit the detection of loss of function in a reasonable time frame or, more importantly, the detection of the onset of generic failure mechanisms at an early stage.

If the draft Regulatory Guide were converted to an active Regulatory Guide, the aspect of an inspection program should be resolved. While it could be argued that further modifications could result in improvements, it appears that the draft Regulatory Guide covers the salient aspects pertinent to an inspection program.

Environmental qualification has been handled on a case-by-case basis, and there is no assurance that a generic program exists. Furthermore, there are several aspects for such a program. Under normal operating conditions, an ocean site will require a different environmental qualification program than an inland site. In addition, a high-temperature dry well of a BWR will be markedly different from reactor regions near ambient temperature. In essence, the areas of environmental qualification are not well defined and specific criteria are needed.

With regard to ISI and testing, there should be a reassessment of existing requirements to establish what modifications may be necessary. The existing visual examination in ASME XI may not be adequate, and the bench testing program probably requires review and modification. Currently, only smaller snubbers are covered by ASME XI; expansion will be required due to the failures of larger snubbers, particularly hydraulic ones. It may be necessary to test in situ in recognition of the massive size of these larger snubbers. In this case, a simpler test may be necessary to determine the functionality of these snubbers. ASME OM4 represents a positive step toward improving testing; however, it may not be totally adequate. Some of these aspects are discussed in Section 10.

9.0 PHASE II STUDY

Several generic aging problems exist that provide a basis for a Phase II program. There is a fine line between true aging effects and aggravated effects that are not representative of aging. Some obvious effects would be mechanical snubbers in a vibrating environment, where snubbers could fail in less than 100 h. While vibratory failure is important, the mechanism is directly related to amplitude and number of cycles.

Table 3.3 is an obvious basis for developing a program on older hydraulic and mechanical snubbers. It contains the parameters cited in the draft Regulatory Guide, ASME OM4, and ASME XI. The table is a qualitative presentation of aging factors such as wear, corrosion, and contamination. A selection of both hydraulic and mechanical snubbers could have a series of tests covering spring rates, release rates, dead band, drag, etc., that would note deviations from normal. The snubbers could then be disassembled to ascertain the causes for the deviations. Any quantification will depend on the snubbers that are selected. ASME OM4 is suggested as a benchmark for such testing.

A specific position has been included in the NRC NPAR Program. It is repeated below as an appropriate scope for a Phase II study:

Aging Assessment and Analysis of Snubbers and Recommendations for Inspection, Surveillance and Maintenance

Objective: To evaluate and assess the performance of hydraulic and mechanical snubbers. Establish failure mechanisms and causes and provide recommendations for practical and cost effective inspection, surveillance and maintenance of snubbers in nuclear power plants. Conduct a Phase II assessment of snubbers in accordance with the NPAR strategy and involving the following specific research elements:

A. Comprehensive Aging Assessment - Based upon the reviews of the operating experiences and analysis performed in Phase I (NUREG/CR-4279) conduct a comprehensive aging assessment including, as necessary, postservice examinations and laboratory testing of naturally-aged snubbers. To be included are effects of accident conditions (e.g., seismic and LOCA effects) on the behavior of aged snubbers. Both mechanical and hydraulic snubbers will be included in the assessment. Effects of aging factors such as wear, corrosion and contamination will be assessed in snubber examination and testing. Testing considerations will include spring rate, release rate, dead band and

drag, assessing deviations from expected norms. Effects of size and manufacturer will be considered in selection of snubbers for testing, recognizing the limitations to address a major cross section of the potential alternatives. A significant task during the testing phase will be to evaluate potential performance indicators for snubbers.

B. Review and Verification of Inspection, Surveillance and Monitoring Methods and Technologies - The Draft Regulatory Guide, "Qualification and Acceptance Tests for Snubbers Used in Systems Important to Safety," deals primarily with qualification testing and acceptance testing. Pre-service and in-service inspection aspects for snubbers have been addressed in codes and standards ASME-XI and ANSI-OM4-1982, "Examination and Testing of Nuclear Power Plant Dynamic Restraints (Snubbers)." Also, the plant specific or standardized technical specifications deal explicitly with this area. Based upon the reviews and analysis performed in Phase I (NUREG/CR-4279) and in conjunction with the aforementioned codes and standards identify and recommend inspection, surveillance and monitoring methods and technologies considered useful in detecting and trending aging and service wear effects in snubbers, which will remain in use on safety related piping and components. The recommended methods must complement the present practices and requirements. The study should further consider whether advanced methods for snubber maintenance and in-service evaluation are feasible and cost effective.

C. Application Guidelines - The recommendations for inspection, surveillance and monitoring methods and the guidelines for their applications will be based upon a coordinated effort with the codes and standards committees and through proper interaction with the NRC staff. Application guidelines will also include considerations for maintenance and service lifetime prediction methods for snubbers.

10.0 SUMMARY, CONCLUSIONS, AND RECOMMENDATIONS

The Nuclear Plant Aging Research (NPAR) program strategy (Figure 10.1) is used to determine the current status of these investigations and to determine additional requirements. The current status is:

- Select Equipment and Define Boundary - Expert opinion has been applied; specific suggestions have been made concerning a redefinition of how many snubbers should be used. As indicated, there could be a substantial reduction in numbers using the current state-of-the-art. In the context of a prioritization study, systems, risk, and aging effects have been considered. The first priority is to reduce the number of snubbers. The second priority is to place definitive tests such as those cited in Section 3 into practice to evaluate aging before it becomes a controlling factor.

- Evaluation of Operating Experience - A major effort has been expended evaluating operating experience. Several sources were examined to be sure that the most significant information was reviewed. The principal source was the LERs; however, other sources were checked and applicable industry practices were examined.

- Comprehensive Aging Assessment - The LERs were used to establish aging/degradation mechanisms. While it is possible that some failure mechanisms were missed, we are confident that most were detected. Parameters such as design specifications, operation, and to a limited degree ongoing research were examined. It appears that more work is required.

- Review and Recommendations for Inspection, Surveillance, and Monitoring - This aspect has been examined in the context of existing and proposed codes, standards, regulatory guides, and industry practice. These factors have been examined in considerable depth. The aspect of cost-effective performance indicators has been considered, primarily with respect to its implications to snubbers. There is very little guidance that appears relevant to the review and verification of advanced methods such as in situ testing.

- Application Guidelines - Most factors have been considered to some degree; for example, a value-impact analysis was conducted. We have had active interactions with ASME XI and the Board of Nuclear Codes and Standards as they relate to snubbers. Furthermore, ongoing activities within the PVRC and the NRC Piping Review Committee relate

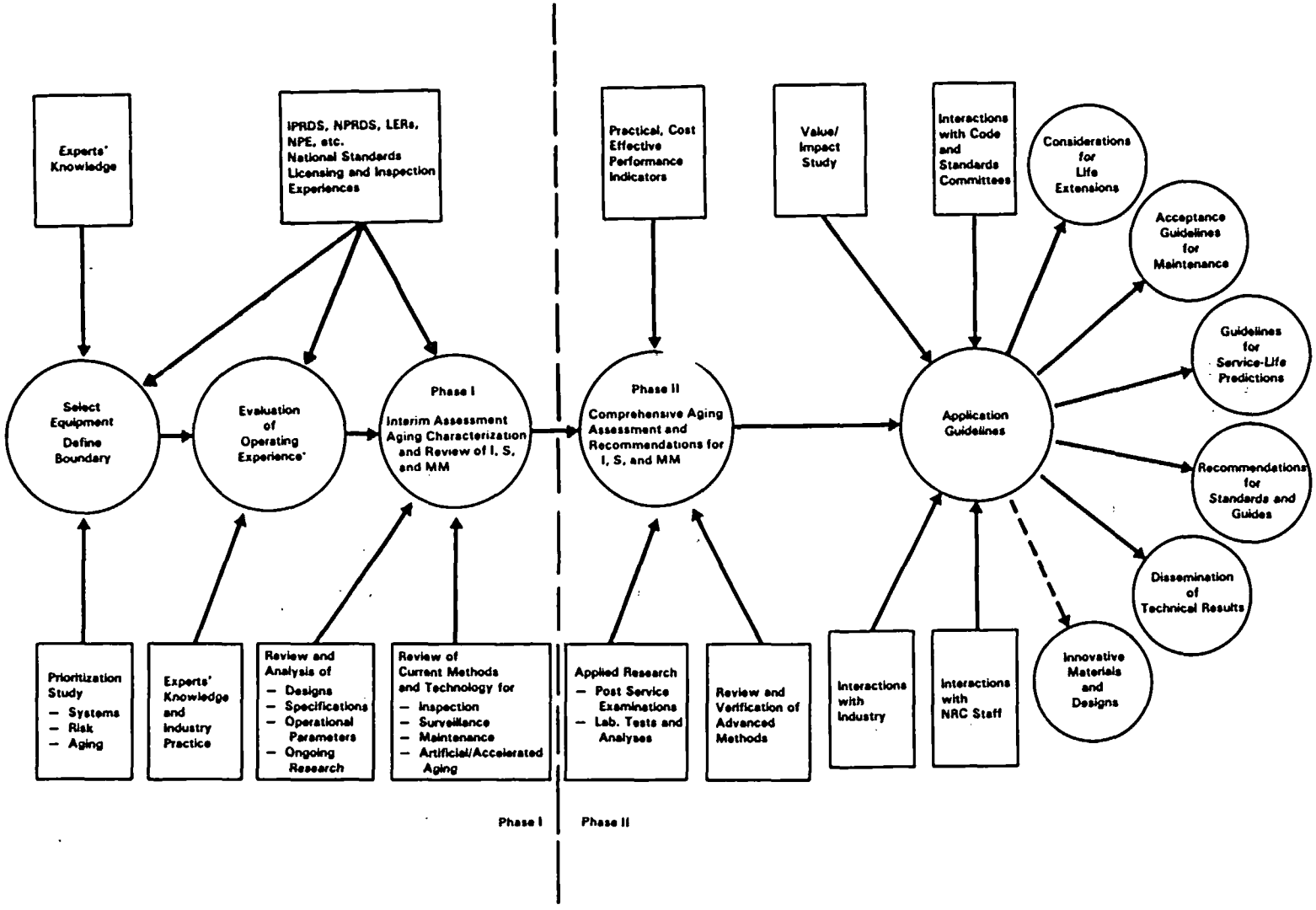

FIGURE 10.1. Nuclear Plant Aging Research Program Strategy

directly to snubbers. With regard to life extension, there has been substantial progress in the past 10 years. Further work is required and should be pursued.

Maintenance is a significant issue. While progress has been made, maintenance often leads to further degradation rather than improvement (see Table 5.5). Obviously, this area requires further action. No attempt has been made to develop guidelines to predict service life. The diversity of failure mechanisms militate against a definite position. The recommendation section notes further suggested actions with regard to codes and standards.

This report is an extensive overview of the status of snubbers; and, as such, it represents a dissemination of technical results. With regard to innovative materials and designs, efforts were limited to the existing status. As cited previously, there have been extensive interactions with NRC staff either with regard to technical specifications through the Piping Review Committee or directly with the author of the draft Regulatory Guide. Finally, interaction with the nuclear industry has occurred through the literature, through direct contacts regarding ongoing snubber activities, or through a series of contacts related to the reduction of the number of snubbers. An obvious interface is the PVRC Steering Committee on Piping, which permits interaction between NRC, utilities, and nuclear steam supply system (NSSS) suppliers. The NPAR program strategy has been considered and actively used in developing and enunciating this program.

The following major recommendations are made:

- The PVRC suggestions include incorporation into ASME III as well as approval of NRC on a case-by-case basis and ultimately on a generic basis to provide utilities the option to markedly reduce the total number of supports, particularly snubbers now used on piping.

- A large number of aging/degradation mechanisms have been cited. In fact, there are far too many to permit concentration on any one mechanism. Therefore, it is imperative to pursue qualification testing to minimize failure and to provide an early warning of failures.

- The draft Regulatory Guide on snubbers should be activated as soon as possible to provide a definitive basis for qualification testing. Existing criteria within ASME XI are inadequate with regard to testing of snubbers and are nonexistent for larger snubbers. Furthermore, the criteria for examination may not be sufficient. Technical specifications should be standardized, and the suggestions included in the report should meet this requirement.

- A definitive standard is required for environmental qualification testing.

The following additional recommendations are specific to given tests:

- Breakaway force is sensitive to both vibration and extended periods of inactivity; inactivity may increase breakaway force levels substantially. Both conditions may exist and should be considered.

- The usual tendency is to minimize the dead band level to minimize impact loads in the snubbers and attached components. This tendency needs to be counterbalanced against the increased tolerance to higher vibration levels at higher dead band levels.

- The spring rate or load displacement is an indication of the stiffness in the snubber; however, stiffness is controlled by the associated hardware attached to the structure, the snubber, and the component. Therefore, the spring rate of the snubber is only a part of the picture and evaluations based on the cited values may not be valid.

- The various measured parameters are quite sensitive to the type of test and the test procedures. An acceptable snubber may be rejected or an unacceptable snubber may be accepted due to variability in test equipment and test procedures. This factor is not recognized in the various codes and standards. A definitive set of criteria should be developed to control this variable.

It is apparent that acceptance and qualification of snubbers is based on some or all of the following parameters: activation, breakaway, dead band, drag, release rate, and spring rate. Therefore, any consideration of preservice and in-service testing should consider these same parameters and determine if they will detect the various aging/degradation mechanisms to which snubbers are subjected. Measurement of these parameters can detect wear, corrosion, contamination, and changes in hydraulic fluid caused by temperature, changes in viscosity, or entrapped air. Loss of fluid in hydraulic snubbers is obvious, and mechanical snubber lockup can be detected by several tests.

In hydraulic snubbers, the hydraulic fluids should have adequate lubricity to minimize galling, be compatible with other materials (e.g., seals), be stable under operating conditions, provide corrosion protection, resist fire, resist radiation damage, and be capable of cleansing by filtration. The effects of entrained or dissolved gases should also be considered.

An analysis of the impact of in situ testing of large snubber should be completed, and the results should be compared with the current ASME XI position of not requiring testing. The position developed should be made available in an appropriate document.

11.0 BIBLIOGRAPHY

American Society of Mechanical Engineers. Rules for Construction of Nuclear Power Plant Components. ASME III, Articles NF-1000 through NF-1112 and NF-3400 through NF-3423. New York.

American Society of Mechanical Engineers. 1980. Component Support Snubbers - Design, Application and Testing. PVP-42, presented at the Pressure Vessel and Piping Conference, ASME Century 2 - Emerging Technology Conferences, San Francisco, California.

American Society of Mechanical Engineers. 1980. Criteria for Nuclear Safety Related Piping and Component Support Snubbers. PVP-45, presented at the Pressure Vessel and Piping Conference, ASME Century 2 - Emerging Technology Conferences, San Francisco, California.

American Society Mechanical Engineers. 1981. Snubber Design Applications and Minimization Methods. PVP-55, New York.

American Society of Mechanical Engineers. 1982. Examination and Performance Testing of Nuclear Power Plant Dynamic Restraints (Snubbers). ANSI/ASME OM4, New York.

American Society of Mechanical Engineers. 1982. Requirements for Preoperational and Initial Start-up Vibration Testing of Nuclear Power Plant Piping Systems. ANSI/ASME OM3, New York.

American Society of Mechanical Engineers. 1983. Rules for Inservice Inspection of Nuclear Power Plant Components. In ASME Boiler and Pressure Vessel Code, Section XI, New York.

Andrews, W. B., et al. 1983. Guidelines for Nuclear Power Plant Safety Issue Prioritization Information Development. NUREG/CR-2800, PNL-4297, Pacific Northwest Laboratory, Richland, Washington.

Brown, E. J., to K. V. Sefrit, memo. September 20, 1984. Failure of Large Hydraulic Snubbers to Lockup. AEOD/E423, Office of the Analysis and Evaluation of Operational Data, U.S. Nuclear Regulatory Commission, Washington, D.C.

Butler, J. H. 1977. Analysis of Owner Design Specifications for Snubbers, Report 2. ORNL/NUREG/TM-116, Oak Ridge National Laboratory, Oak Ridge, Tennessee.

Butler, J. H. 1978. Analysis of Design Practices for Snubbers, Report 3. ORNL/NUREG/TM-145, Oak Ridge National Laboratory, Oak Ridge, Tennessee.

Butler, J. H., and F. M. O'Hara, Jr. 1976. Analysis of Abnormalities of Snubbers in Nuclear Reactor Service (Report 1). ORNL/NUREG/TM-53, Oak Ridge National Laboratory, Oak Ridge, Tennessee.

Chang, T. Y. 1983. Seismic Qualification of Equipment in Operating Plants. NUREG-1018, U.S. Nuclear Regulatory Commission, Washington, D.C.

Chuang, T. Y., et al. 1984. Impact of Changes in Damping and Spectrum Peak Broadening on the Seismic Response of Piping Systems. NUREG/CR-3526, Lawrence Livermore National Laboratory, Livermore, California.

Eidinger, J., and G. Hau. 1985. "Snubber Reduction by Reduction of Unnecessary Seismic Margins." Presented at ASME Pressure Vessel and Piping Conference, June 24-27, 1985, New Orleans, Louisianna.

Eisenhut, D. G., NRC, to H. R. Denton, NRC, memo. April 23, 1984. Elimination of Tabular Listing of Snubbers in Technical Specifications. U.S. Nuclear Regulatory Commission, Washington, D.C.

Emrit, R., et al. 1983. A Prioritization of Generic Safety Issues. NUREG-0933, U.S. Nuclear Regulatory Commission, Washington, D.C.

Gurdal, R. J. 1985. "Snubber Lockup Accelerations and Acceptable Dead-Bond Displacement by Extension of the Response Spectra Method." Presented at ASME Pressure Vessel and Piping Conference, June 24-27, 1985, New Orleans, Louisianna.

Hendrickson, L. A., and K. E. Schwartztrauber. July 1984. Examination of TMI-2 Snubbers: Phase 2. EPRI NP-3593, prepared for the Electric Power Research Institute by PENTEK, Inc.

Hsu, C. March 23, 1984. Mechanical Snubber Failure. AEOD/E406, Office of the Analysis and Evaluation of Operational Data, U.S. Nuclear Regulatory Commission, Washington, D.C.

IE IN 84-67. August 17, 1984. Recent Snubber Inservice Testing with High Failure Rates. U.S. Nuclear Regulatory Commission, Washington, D.C.

IE IN 84-73. September 14, 1984. Downrating of Self-Aligning Ball Bushings Used in Snubbers. U.S. Nuclear Regulatory Commission, Washington, D.C.

IE IN 81-01. January 27, 1981. Surveillance of Mechanical Snubbers. U.S. Nuclear Regulatory Commission, Washington, D.C.

Jimenez, P., and A. Requena. 1985. "Snubber Optimization Program." Presented at ASME Pressure Vessel and Piping Conference, June 24-27, 1985, New Orleans, Louisianna.

Kohler, E. G., J. J. Smerke, III, and H. F. Dobson. 1983. "Peach Bottom Atomic Power Station Hydraulic Snubber Failures." ANS Trans. 45:565.

Landers, D. F., R. D. Hookway, and K. D. Desai. 1981. Effects of Postulated Event Devices on Normal Operation of Piping Systems in Nuclear Power Plants. NUREG/CR-2136, Teledyne Engineering Services, Waltham, Massachusetts.

Levin, H., and R. Cudlin. 1978. Operating Experience with Snubbers. NUREG-0467, U.S. Nuclear Regulatory Commission, Washington, D.C.

Lu, S. C., and C. K. Chou. 1984. Reliability Analysis of Stiff Versus Flexible Piping - Interim Project Report. NUREG/CR-3718, Lawrence Livermore National Laboratory, Livermore, California.

Murphy, G. A., et al. 1984. Survey of Operating Experience from LERs to Identify Aging Trends. NUREG/CR-3543, ORNL/NSIC-216, Oak Ridge National Laboratory, Oak Ridge, Tennessee.

Olshinski, J. A., NRC, to D. G. Eisenhut, NRC, memo. October 24, 1984. Inconsistencies in Snubber Technical Specification and Recommended Changes. U.S. Nuclear Regulatory Commission, Washington, D.C.

Pacific Scientific. August 1984. Data Report 1700, Anaheim, California.

Pacific Scientific. 1984. A Simulated 40-Year Service Life Test for a PSA-3 Shock Arrestor with 2% to 3% Friction. Test Report 871, Anaheim, California.

PVRC Technical Committee on Piping Committee, Task Groups. December 1984. "Damping Values, Seismic Spectra, Industry Practice, Dynamic Allowables." Technical Position on Criteria Establishment. WRC Bulletin 300, ISSN 0043-2326, New York.

Palo Verde Unit 1, Plant Systems 3/4.7.9 Snubbers, Regulatory Guide Final Draft.

Rahn, R. C. 1978. Probabilistic Stress Evaluation of Piping Systems Assuming Single Snubber Failures. ASME Publication 78-PVP-107, presented at the Joint ASME/CSME Pressure Vessel and Piping Conference, Montreal, Canada, June 25-30, 1978.

Renkey, E. J. 1981. "Low Level Vibration Effects on Snubber Life." HEDL-SA-2231, presented at ASME Pressure Vessel and Piping Conference, June 21-26, 1981, Denver, Colorado.

Severud, L. K., and G. D. Summers. 1980. "Design Considerations for Mechanical Snubbers." HEDL-SA-1991, presented at ASME Pressure Vessel and Piping Conference, June 21-26, 1981, Denver, Colorado.

Stevens, A. J., and M. Braccio. 1982. Snubber Reliability Improvement Study. EPRI NP-2297, prepared for Electric Power Research Institute by Babcock & Wilcox Company, Lynchburg, Virginia.

Task Group on Damping Values of the Technical Committee on Piping Systems under the guidance of the Steering Committee on Piping Systems of the PVRC Committee. December 1984. Technical Position on Damping Values for Piping-Interim Summary Report. WRC Bulletin 300, ISSN 0043-2325, New York.

Task Group on Industry Practice of the Technical Committee on Piping Systems under the guidance of the Steering Committee on Piping Systems of the PVRC Committee. December 1984. Technical Position on Industry Practice. WRC Bulletin 300, ISSN 0043-2325, New York.

Task Group on Spectra Development of the Technical Committee on Piping Systems under the guidance of the Steering Committee on Piping Systems of the PVRC Committee. December 1984. Technical Position on Response Spectra Broadening. WRC Bulletin 300, ISSN 0043-2325, New York.

Tuttle, E. B., and A. D. DuBose. 1985. "Snubber Optimization Using Multiple Response Spectra and Increased Damping Techniques." Presented at ASME Pressure Vessel and Piping Conference, June 24-27, 1985, New Orleans, Louisianna.

U.S. Department of Energy. September 1984. Mechanical and Hydraulic Snubber for Nuclear Applications. NE E7-9T, Washington, D.C.

U.S. Nuclear Regulatory Commission. February 1981. Qualification and Acceptance Tests for Snubbers Used in Systems Important to Safety. Draft Regulatory Guide SC 708-4, Rev. 1, Washington, D.C.

U.S. Nuclear Regulatory Commission. July 1981. USNRC Standard Review Plan for 3.9.3 ASME Code Class 1, 2, and 3 Components, Component Supports, and Core Support Structures. NUREG-0800, Washington, D.C.

U.S. Nuclear Regulatory Commission. May 3, 1984. Technical Specifications for Snubbers. Generic Letter 84-13, Washington, D.C.

U.S. Nuclear Regulatory Commission. November 1984. Report of the U.S. Nuclear Regulatory Commission Piping Review Committee, Evaluation of Potential for Pipe Breaks. NUREG-1061, Vol. 3, Washington, D.C.

U.S. Nuclear Regulatory Commission. December 1984. Report of the U.S. Nuclear Regulatory Commission Piping Review Committee, Evaluation of Other Dynamic Loads and Load Combinations. NUREG-1061, Vol. 4, Washington, D.C.

U.S. Nuclear Regulatory Commission. April 1985. Report of the U.S. Nuclear Regulatory Commission Piping Review Committee, Evaluation of Seismic Designs - A Review of Seismic Design Requirements for Nuclear Power Plant Piping. NUREG-1061, Vol. 2, Washington, D.C.

U.S. Nuclear Regulatory Commission. April 1985. Report of the U.S. Nuclear Regulatory Commission Piping Review Committee, Summary and Evaluation of Historical Strong-Motion Earthquake Seismic Response and Damage to Aboveground Industrial Piping. NUREG-1061, Vol. 2 Addendum, Washington, D.C.

U.S. Nuclear Regulatory Commission. April 1985. Report of the U.S. Nuclear Regulatory Commission Piping Review Committee, Summary - Piping Review Committee Conclusions and Recommendations. NUREG-1061, Vol. 5, Washington, D.C.

W-STS, Plant Systems 3/4.7.9 Snubbers, Regulatory Guide Draft.

Wadsworth, F. L., et al. 1983. Examination of Mechanical Snubber from TMI-2. EPRI-NP-2966, Electric Power Research Institute, Palo Alto, California.

APPENDIX A

CONTENTS OF A FUNCTIONAL SPECIFICATION FOR SNUBBERS USED IN SYSTEMS IMPORTANT TO SAFETY

APPENDIX A

CONTENTS OF A FUNCTIONAL SPECIFICATION FOR SNUBBERS USED IN SYSTEMS IMPORTANT TO SAFETY

1. SCOPE

This document establishes requirements for a functional specification for mechanical and hydraulic snubbers for applications in systems important to the safety of nuclear power plants.

2. DESIGN SPECIFICATION RELATIONSHIP

The functional specification provides detailed definition of functional requirements applicable to snubbers for components and piping systems important to safety. The requirements of the functional specification may be provided as part of the snubber design specification or as part of an equipment or purchase specification that also includes the design specification. If this functional specification is prepared by the snubber manufacturer, an application report prepared for the licensee shall be made part of the design specification. The application report shall be reviewed and certified by one or more registered professional engineers to be correct and complete in accordance with the functional parameters developed from the safety-related functional requirements with those in the functional specification prepared by the manufacturer. Compliance with these requirements for this functional specification is intended to ensure that the operating conditions and safety-related functions of the snubber have been adequately defined, permitting the snubber manufacturer to demonstrate the adequacy of both the design of the snubber and the materials used in its construction for the intended service.

3. DEFINITIONS

Activation level - The axial velocity or acceleration that causes the activation of the snubber.

Dead band - The free axial movement of the snubber between the two activations in opposite directions.

Drag - The breakaway load that overcomes the internal snubber friction or the load maintaining the snubber movement at a specific velocity.

Emergency load - The design load capacity for the snubber based on the use of Level C Service Limits defined by Section III of the ASME B&PV Code.

Faulted load - The design load capacity for the snubber based on the use of Level D Service Limits defined by Section III of the ASME B&PV Code.

Rated load - The design load capacity for the snubber based on the use of Level A Service Limits defined by Section III of the ASME B&PV Code.

Release rate - The rate of the axial snubber movement after the activation of the snubber under a specified load.

Spring rate - The linear approximation of the relationship between the peak force range and the peak displacement range. The peak displacement range, including the dead band, should be obtained during the dynamic cyclic test through the peak force range. The peak force range should include the rated load or emergency load applied in opposite directions.

4. FUNCTIONAL SPECIFICATION

It is the responsibility of the owner or his agent to identify the safety-related functional requirements of the snubber and provide for the delineation of the following:

a. Application characteristics (see Section 4.1),
b. Design requirements (see Section 4.2),
c. Operational requirements (see Section 4.3),
d. Functional parameters (see Section 4.4),
e. Special material requirements (see Section 4.5),
f. Installation requirements (see Section 4.6),
g. Maintenance and inspection requirements (see Section 4.7),
h. Other requirements (see Section 4.8).

4.1 Application Characteristics

The application characteristics of each snubber shall be identified by listing whichever of the following descriptive terms are appropriate:

a. Seismic restraint,
b. Dynamic force restraint,

c. Pipe whip restraint,

d. Relief valve restraint,

e. Others, including combinations of the above.

4.2 Design Requirements

The following information shall be specified:

a. The design operating temperature,

b. Time-temperature data for design thermal transients with the number of cycles indicated,

c. The seismic acceleration and dynamic loadings that the snubbers must be capable of withstanding transverse to the line of action without loss of functional capability,

d. The seismic acceleration and dynamic loadings that the snubbers must be capable of withstanding along the line of action without loss of functional capability,

e. Limits on the acceptable range of the fundamental frequency of the snubber assembly,

f. Limits on acceptable angular offset from the line of action of the load.

4.3 Operational Requirements

Anticipated modes of snubber operation, including those related to seismic events, water hammer, etc., shall be specified. The operating conditions and environmental conditions shall be identified.

4.3.1 Operating Conditions. The number of operational cycles, the imposed loading or movement (number, amplitude, and direction), and the environment, including temperature, for each of the following operational categories shall be specified:

a. Installation testing,

b. System hydrostatic testing,

c. Preoperational testing,

d. Startup testing,

e. Normal and abnormal plant operations (including postulated accident conditions, shock, or pulsating loads),

f. Inservice testing,

g. Vibration,

h. Others.

4.3.2 Environmental Conditions. A histogram of the environmental conditions that are postulated to exist shall be provided.

The need of snubbers to survive normal and abnormal environmental conditions with or without maintenance shall be stated. Since the attaching hardware can influence the survival of the snubber, it shall also be considered. The following factors are considered relevant:

a. The atmosphere, including chemistry, temperature, humidity, and radioactivity, in which the snubbers will be installed and must operate under normal plant conditions.

b. The atmosphere, including chemistry, temperature, humidity, and radioactivity, in which the snubbers must operate under upset, emergency, and faulted plant conditions. The duration of these conditions shall be specified.

c. The vibration environment under normal, upset, emergency, and faulted conditions.

4.4 Functional Parameters

As a minimum, the following functional parameters shall be specified.

a. Acceptable limits for both the breakaway drag force and the drag force associated with moving under a specified velocity at the maximum and minimum working temperatures,

b. Acceptable limits for the dead band at the maximum and minimum working temperatures for the range of working loads and piston locations,

c. Activation level (when applicable) and tolerance at rated load at the maximum and minimum working temperatures,

d. Release rate and tolerance at 5%, 10%, 25%, 50%, and 100% of rated load and at emergency load for the maximum and minimum working temperatures,

e. Acceptable range of spring rates at the maximum and minimum working temperatures and the frequency, the load range, and the classification of the load (i.e., normal or emergency) at which the spring rate is to be determined with piston locations at 1/4, 1/2, and 3/4 stroke locations.

4.5 Special Material Requirements

Special material requirements of the snubber shall be specified. Items to be considered shall include, but not be limited to, the following:

a. Hydraulic fluid (including its potential for electrolytic corrosion),

b. Seals,

c. Springs,

d. Special surface preparations or coatings,

e. Lubricants.

4.6 Installation Requirements

The following requirements for the installation of the snubber shall be specified:

a. Orientation of the hydraulic snubber and relative position of the hydraulic reservoir to the snubber if any limitations exist,

b. Orientation of the mechanical snubber installation if any limitations exist,

c. The available space for installation and removal if any limitations exist,

d. Piston location in the snubber as installed,

e. The range of transverse movement provided,

f. Any special mounting provided or required.

4.7 Maintenance and Inspection Requirements

An acceptable hydraulic fluid leakage rate shall be specified for hydraulic snubbers. Other special provisions for snubber maintenance shall be specified. Where requirements are established for in situ inservice testing, requirements should be included for demonstrating the feasibility of performing the required inservice tests (i.e., drag test, activation level test, and release rate test) with specific test equipment.

4.8 Special Performance Requirements

Other requirements for special performance or loading conditions, as applicable, shall be specified.

APPENDIX B

QUALIFICATION OF FUNCTIONAL PARAMETERS FOR SNUBBERS USED IN SYSTEMS IMPORTANT TO SAFETY

APPENDIX B

QUALIFICATION OF FUNCTIONAL PARAMETERS FOR SNUBBERS USED IN SYSTEMS IMPORTANT TO SAFETY

1. SCOPE

This document describes the basic requirements for the qualification of a design for snubbers used in nuclear power plant systems important to safety.

2. PURPOSE

The purpose of this document is to provide guidance for demonstrating the capability of a snubber design to satisfy the specified functional requirements. Testing is required to demonstrate the capability of the design to satisfy all specified functional requirements except the ability to withstand ultimate load, for which an analysis may be used instead of testing.

3. QUALIFICATION PLAN

A qualification plan shall be developed for each snubber design and rating, and this plan shall be submitted to the owner or his agent to be reviewed for consistency with the design specification and for approval or acceptance as the basis for an application report. The qualification plan for functional parameters for snubbers shall, as a minimum, contain the following information:

a. Snubber descriptions and specifications (see Section 3.1),
b. Snubber sampling requirements (see Section 3.2),
c. Material data requirements (see Section 3.3),
d. Mounting requirements (see Section 3.4),
e. The aging simulation requirements (see Section 3.5),
f. The service condition simulation requirements (see Section 3.6),
g. Functional parameters and environmental variables to be measured (see Section 3.7),
h. Test and monitoring equipment requirements (see Section 3.8),
i. The test sequence (see Section 3.9),

j. Special tests (see Section 3.10),

k. Limits or failure definition for the test (see Section 3.11),

l. Ultimate load capacity (Section 3.12).

3.1 Snubber Descriptions and Specifications

The snubber design to be qualified shall be described in full by its model number, drawing numbers, and total weight. Serial numbers of tested snubbers shall be recorded. The qualification requirements shall be specified in the functional specification that covers the functional parameters described in Appendix A.

3.2 Snubber Sampling Requirements

Two snubbers, either two prototypical units manufactured for qualification purpose or two production units selected randomly from a population of not less than four, shall be used to qualify a specified design and rating. This includes the use of the same materials, parts, and general arrangement. Snubbers used for qualification testing shall not be used for functions important to safety in nuclear power plants.

3.3 Material Data Requirements

The following material data shall be included to ensure that the snubber was manufactured according to the specification:

a. The data from or reference to tests conducted to prove the adequacy of the basic material selection, including, for example, tests for compatibility between the seal material and the hydraulic fluid and between the seal material and the working environment with special consideration given to the combined effects of temperature and radiation on material performance.

b. The data on material and process traceability for the snubber. These data shall be included to demonstrate that the material of the snubber that was tested and the materials called out in the manufacturing specification have the same specification as the materials whose selection was justified in 3.3.a.

3.4 Mounting Requirements

The qualification plan shall specify the way the snubber is to be mounted for testing. The plan shall require that the snubber unit be mounted in a manner (pins, bolts, welds, clamps, etc.) and position (orientation with respect to gravity) that simulate its expected installation with attachments for service application when in actual use unless an analysis can be performed to show that its performance would not be altered by other means of mounting. Such an analysis should be based on a demonstration using service experience and previous test results that all relevant failure modes related to mounting have been adequately considered in the analysis and that assumptions made to provide a basis for the analysis are reasonable.

3.5 Aging Simulation Requirements

The qualification plan shall specify the aging simulation for the snubber design based on requirements in the functional specification. Aging simulation procedures to put the snubber units in a condition equivalent to the end of life condition shall be conducted, including sand and dust simulation and a salt spray test similar to Mil-E-5272c* if the specified working environment requires it.

3.6 Service Condition Simulation Requirements

The qualification plan shall specify a steam humidity simulation of 350°F (177°C) saturated steam and for a duration of 72 hours if the snubber service area is inside the containment. It shall specify a submergence in 200°F (93°C) water for a duration of 72 hours if the snubber service is in a water environment.

3.7 Functional Parameters and Environmental Variables To Be Measured

The qualification plan shall specify the functional parameters and environmental variables to be measured for the snubber test. The functional parameters shall include, as a minimum, the drag, the dead band, the activation level (when

*"Environmental Testing, Aeronautical and Associated Equipment, General Specifications for" may be obtained from the Naval Publications and Forms Center, 5801 Tabor Avenue, Philadelphia, Pa. 19120, Phone: (215)697-3321.

applicable), the release rate, and the spring rate. The environmental variables shall include temperature, humidity or steam-water condition, special thermal transients, and radiation (when applicable). For hydraulic snubbers, the hydraulic fluid leakage during tests shall be recorded. The application of a low-amplitude axial vibration to snubbers for not less than 5×10^6 cycles shall be included as an environmental requirement.

3.8 Test and Monitoring Equipment

The test shall be conducted and monitored using equipment that provides resolution for detecting meaningful changes in the variables. The qualification plan shall specify the test and monitoring equipment to be used for the qualification of the snubber and describe the accuracy within the range anticipated for use on the proposed tests. The test equipment and monitoring equipment shall be calibrated against auditable calibration standards and shall have documentation to support such calibration. The data-recording equipment shall have sufficient speed and capacity to permit the time dependence of each measured variable to be determined.

3.9 The Test Sequence

The qualification test shall include the following tests in the described sequential order as a minimum requirement:

a. All five parameters described in Section 3.7 shall be determined at the recorded room temperature (or the specified lowest design service temperature ±10°F (5.5°C), whichever is lower). Temperature shall be recorded at the beginning and end of each of the tests. The tests shall be performed with the snubber at the 1/2 stroke location unless otherwise required.

1. The drag shall be determined for both directions both for the breakaway condition and for the condition of moving at a specified velocity. The values of the drag and the velocity shall be recorded.

2. The activation level (when applicable) shall be tested for both directions by rapid cyclic application of a force equal to 5%, 10%, 25%, 50%, and 100% of the rated load. The acceleration and velocity of the piston motion shall be recorded as a function of time. The activation level shall be determined from this recording for each force level.

3. The dead band shall be recorded during the activation level testing described in Section 3.9.a.2.

4. The release rate shall be tested and recorded for both directions at 5%, 10%, 25%, 50%, and 100% of rated load and at the emergency load.

5. The spring rate shall be tested by a dynamic cyclic loading equal to the rated load or other specified load and with snubber movement centered about the 1/4, 1/2, and 3/4 stroke locations according to the requirement of the functional specification. The testing frequency shall be from 3 Hz to 33 Hz at intervals of approximately 3 Hz. Each frequency shall last not less than 10 seconds. Response at each frequency shall be recorded as load-displacement traces.

6. One-cycle dynamic loading tests with snubber movement centered about the 1/4, 1/2, and 3/4 stroke locations and a loading amplitude equal to the faulted loading shall be performed to demonstrate adequacy of the response. The force, displacement, and velocity shall be recorded for this test. Any damage to the snubber resulting from this test may be evaluated separately or by performance in tests of b. or c. below.

7. Hydraulic fluid leakage during the testing shall be recorded.

b. Repeat tests described in a. but with snubber temperature at 200°F (93°C) (or the specified highest design service temperature, whichever is higher).

c. The aging simulation procedure described in Sections 3.5 and 3.6 shall be conducted, including the application of at least 5×10^6 cycles of an axial vibration with an amplitude not less than 100% of the dead band at the applied frequency.

d. Repeat tests described in a. after completion of the aging simulation procedures described in c.

3.10 Special Tests

The qualification plan shall specify special tests for the snubber design according to the design specification requirements. These are the tests demonstrating the ability of the snubbers to meet special specified requirements such as load-sharing arrangements or an in situ inservice activation test. Test setup and equipment used shall closely simulate the required condition so the feasibility can be illustrated and correlation between results can be established.

3.11 Limits or Failure Definition for the Test

The snubber design shall be considered to have failed the qualification test if any one of the following occurs:

a. The drag exceeds the specified limits in either direction.

b. The dead band exceeds the specified limit.

c. The activation level exceeds the specified range in either direction.

d. The release rate exceeds the specified range in either direction under the specified loadings.

e. The spring rate is less than the specified range for all frequencies at the specified stroke location.

f. The hydraulic fluid leakage rate exceeds the specified limit.

g. Any failures except those caused by testing equipment or procedure abnormalities occur.

Revisions to the design must be made before the new design can be qualified in accordance with this Appendix.

3.12 Ultimate Load Capacity

The ultimate load capacity of a snubber design shall be determined by analysis. The analysis report shall follow the stress report requirement described by Section III of the ASME B&PV Code. The mode of failure, whether the snubber movement will be frozen or free after an ultimate failure, shall be determined by the analysis.

4. DOCUMENTATION

4.1 General

The qualification documentation shall provide a basis for demonstrating that the snubber design is qualified for its application and meets its specified performance requirements. The basis for the qualification shall be described to show the relationship of all facets of analytical and test results to the specified requirements in order to support the adequacy of the snubber design.

4.2 Documentation Files

The manufacturer shall maintain a file of the qualification plan and test data for each specific snubber design tested. The file shall contain the infor-

mation listed in Section 3. Test data shall be recorded as described in Section 4.3.

4.3 Test Data

The test data shall contain:

a. The snubber functional specification,

b. The qualification plan,

c. Identification of the specific functional parameter(s) to be demonstrated by the test,

d. The relative position of the test in the test sequence,

e. Report of test results. The report shall include:

   1. Objective of the test,
   2. The snubber tested,
   3. Description of test equipment (test setup) and instrumentation used including calibration records reference,
   4. Deviations from the qualification plan, if any,
   5. Test procedures,
   6. Test results,
   7. Summary, conclusions, and recommendations,
   8. Approval signature and date (certification by a professional engineer competent in the field of functional and environmental testing).

4.4 Test Evaluation

After the snubbers have successfully passed or failed the qualification tests, a posttest analysis shall be conducted. The results of this analysis shall be a part of the report of test results and shall contain the following information:

a. Identification of the snubber tested,

b. The last test conducted on the snubber in the test sequence,

c. Analysis of the posttest snubber condition,

d. Summary, conclusions, and recommendations,

e. Approval signature and date (certification by a professional engineer competent in the field of functional and environmental testing),

f. Disposition of snubber.

4.5 Other Information

The following information, as applicable, shall be included in the report of test results:

a. A statement of inapplicable portions of the specification,

b. A description of any conditions peculiar to the snubber test that are not covered above but that would probably affect the performance of the snubber during testing.

APPENDIX C

ACCEPTANCE TESTING CRITERIA FOR THE PRODUCTION OF SNUBBERS USED IN SYSTEMS IMPORTANT TO SAFETY

APPENDIX C

ACCEPTANCE TESTING CRITERIA FOR THE PRODUCTION OF SNUBBERS USED IN SYSTEMS IMPORTANT TO SAFETY

1. SCOPE

This document describes the basic requirements for the acceptance test for the production of snubbers used in systems important to safety in nuclear power plants.

2. PURPOSE

The purpose of this document is to provide guidance for demonstrating the adequacy of fabrication in light of functional requirements for the acceptance of snubbers from the production line. Acceptance testing is required for all snubbers that are used in systems important to safety.

3. PRODUCTION ACCEPTANCE TEST PLAN

A production acceptance test plan shall be developed for each model and size of snubber by the snubber manufacturer and shall be submitted to the owner or his agent to be reviewed for consistency with the design specification and for approval. The production acceptance test plan for snubbers shall contain the following information:

a. Snubber descriptions and specifications (see Section 3.1),
b. Manufacturing data (see Section 3.2),
c. Test mounting requirements (see Section 3.3),
d. Functional parameters to be measured (see Section 3.4),
e. Test and monitoring equipment requirements (see Section 3.5),
f. Test sequence (see Section 3.6),
g. Limits or failure definition for the test (see Section 3.7).

3.1 Snubber Descriptions and Specifications

The snubber shall be described in full by its model number, serial number, drawing numbers, and total weight.

3.2 Manufacturing Data

The manufacturing data identified below shall be included to ensure that the snubber was manufactured according to the specification and that materials and processes have the same specification as those for the snubbers used in the qualification tests (Appendix B).

a. The data from or reference to tests conducted to prove the adequacy of the basic design. This should include, for example, the compatibility test between seal material and the hydraulic fluid and the working environment with special consideration given to the combined effects of temperature and radiation on material performance. A master file of material properties can be referred to.

b. The data on material and process traceability of the snubber. These data shall be included to demonstrate that the snubber has successfully met the fabrication requirements.

3.3 Test Mounting Requirements

The test plan shall specify the way the snubber is to be mounted for testing. The plan shall require that the snubber be mounted in a manner (pins, bolts, welds, clamps, etc.) and position (orientation with respect to the gravitational field of the earth) that simulate its expected service installation using standard interface hardware when in service unless an analysis can be performed and justified to show that the snubber's performance would not be altered by other means of mounting.

3.4 Functional Parameters To Be Measured

The test plan shall specify the method of testing for all functional parameters as specified in the functional specification. As a minimum, the following four functional parameters shall be measured for the snubber test under a recorded temperature ambient. They shall include the drag, the dead band, the activation level (when applicable), and the release rate. The plan shall also specify

that for hydraulic snubbers, the hydraulic fluid leakage during tests shall be measured and recorded.

3.5 Test and Monitoring Equipment

The test plan shall indicate the equipment and types of sensors used to measure the parameters for the test and describe the accuracy within the range anticipated for use on the tests. They should provide sufficient resolution to detect meaningful changes in the variables. The test equipment and monitoring equipment shall be calibrated against auditable calibration standards and shall have documentation to support such calibration. The time interval between measurements shall be specified in the test plan so that the time dependence of each measured variable can be determined.

3.6 Test Sequence

The testing shall include the following tests in the described sequential order as a minimum requirement unless the design specification requires otherwise. Inservice test behavior shall be considered if it is a requirement.

a. A free (without load) exercising of not less than 30 full-stroke cycles shall be made to demonstrate that the snubber unit is in working order.

b. All four parameters described in Section 4.4 shall be determined and ambient and snubber temperature recorded with the snubber movement centered about the 1/2 stroke position.

1. The drag shall be determined both for the breakaway condition and the condition of moving under a specified velocity. Tests shall be made for both directions.

2. The activation level shall be tested for 5%, 10%, 25%, 50% and 100% of the rated load for both directions.

3. The dead band of the snubber shall be measured and recorded during the tests described in Section 3.6.b.2.

4. The release rate shall be tested at 5%, 10%, 25%, 50%, and 100% of the rated load. Tests shall be made for both directions.

5. Hydraulic fluid leakage during the testing shall be recorded.

3.7 Limits or Failure Definition for the Test

a. As a minimum, the test plan shall specify the limits for the parameters identified below. The snubber unit shall not be accepted for applications in systems important to safety if any one of the functional parameters fails to meet the specified limits, in particular, if any one of the following occurs:

1. The drag exceeds the specified limits in either direction.
2. The dead band exceeds the specified limit value for the associated loading.
3. The activation level exceeds the specified range in either direction.
4. The release rate exceeds the specified ranges in either direction under the specified loadings.

b. The test plan shall specify a hydraulic fluid leakage limit for the test of hydraulic snubbers based on the design specification requirements. The unit shall not be accepted from the production line if the hydraulic fluid leakage rate exceeds the specified limit.

c. A posttest analysis shall be made for those snubber units that failed the test. Rework to correct the deficiency identified by this analysis is allowed only if the deficiency is not caused by the basic design. The reworked snubber unit may be retested and accepted if it meets the test requirement.

4. DOCUMENTATION

4.1 General

The documentation of the test results shall provide a basis for demonstrating that each snubber accepted from the production line has met its specified performance requirements.

4.2 Documentation Files

The manufacturer shall maintain a file with the production acceptance test plan and test data for each specific snubber tested. The file shall contain the information listed in Section 3. Test and analysis data shall be recorded as described in Section 4.3. If a snubber failed to pass the test requirements, a post-test analysis shall be conducted. The results of this analysis shall be a part of the documentation as described in Section 4.4.

4.3 Test Data and Records

The test data shall contain:

a. The reference production acceptance plan,

b. Report of test results. The report shall include:

   1. Objective of tests,
   2. Identification of the snubber tested,
   3. Description of test equipment (test setup) and instrumentation used, including reference to calibration records,
   4. Deviations from the test plan, if any,
   5. Test procedures,
   6. Test results,
   7. Summary, conclusions, and recommendations,
   8. Approval signature and date indicating acceptance or nonacceptance.

4.4 Test Evaluation and Records

The posttest analysis data shall contain:

a. Identification of the snubber tested,

b. Tests in which the snubber failed to meet the requirement,

c. Analysis of the posttest snubber condition,

d. Summary, conclusions, and recommendations,

e. Approval signature and date.

APPENDIX D

WESTINGHOUSE STANDARDIZED TECHNICAL SPECIFICATIONS

APPENDIX D

WESTINGHOUSE STANDARDIZED TECHNICAL SPECIFICATIONS

PLANT SYSTEMS W-STS

3/4.7.9 SNUBBERS

LIMITING CONDITION FOR OPERATION

3.7.9 All snubbers shall be OPERABLE. The only snubber excluded from the requirements are those installed on nonsafety-related systems and them only if their failure of failure of the system on which they are installed would have no adverse affect on any safety-related system.

APPLICABILITY: MODES 1, 2, 3, and 4. MODES 5 and 6 for snubbers located on systems required OPERABLE in those MODES.

ACTION:

With one or more snubbers inoperable on any system, within 72 hours replace or restore the inoperable snubber(s) to OPERABLE status and perform an engineering evaluation per Specification 4.7.9g. on the attached component or declare the attached system inoperable and follow the appropriate ACTION statement for that system.

SURVEILLANCE REQUIREMENTS

4.7.9 Each snubber shall be demonstrated OPERABLE by performance of the following augmented inservice inspection program in lieu of the requirements of Specification 4.0.5.

a. Inspection Types
As used in this specification, type of snubber shall mean snubbers of the same design and manufacturer, irrespective of capacity.

b. Visual Inspections
Snubbers are categorized as inaccessible or accessible during reactor operation. Each of these groups (inaccessible and accessible) may be

inspected independently according to the schedule below. The first inservice visual inspection of each type of snubber shall be performed after 4 months but within 10 months of commencing POWER OPERATION and shall include all snubbers. If all snubbers of each type (on any system) are found OPERABLE during the first inservice visual inspection, the second inservice visual inspection (of that system) shall be performed at the first refueling outage. Otherwise, subsequent visual inspections (of a given system) shall be performed in accordance with the following schedule:

No. of Inoperable Snubber of Each Type (on Any System) per Inspection Period	Subsequent Visual Inspection Period*,**
0	18 months ±25%
1	12 months ±25%
2	6 months ±25%
3,4	124 days ±25%
5,6,7	62 days ±25%
8 or more	31 days ±25%

* The inspection interval for each type of snubber (on a given system) shall not be lengthened more than one step at a time unless a generic problem has been identified and corrected; in that event the inspection interval may be lengthened one step the first time and two steps thereafter if no inoperable snubbers of that type are found (on that system).

** The provisions of Specification 4.0.2 are not applicable.

c. Visual Inspection Acceptance Criteria

Visual inspections shall verify that: (1) there are no visible indications of damage or impaired OPERABILITY, (2) attachments to the foundation or supporting structure are functional, and (3) fasteners for attachment of the snubber to the component and to the snubber anchorage are functional. Snubbers which appear inoperable as a result of visual inspection may be determined OPERABLE for the purpose of establishing the next visual inspection interval, provided that: (1) the cause of the rejection is clearly established and remedied for that particular snubber and for other snubbers irrespective of type (on that system) that may be generally susceptible; and (2) the affected snubber is functionally tested in the as-found condition and determined OPERABLE per Specification 4.7.9f. All

snubbers connected to an inoperable common hydraulic fluid reservoir shall be counted as inoperable snubbers. (For those snubbers common to more than one system, the OPERABILITY of such snubbers shall be considered in assessing the surveillance schedule for each of the related systems.)

d. Transient Event Inspection

An inspection shall be performed of all snubbers attached to sections of systems that have experienced unexpected, potentially damaging transients as determined from a review of operational data and a visual inspection of the systems within 6 months following such as event. In addition to satisfying the visual inspection acceptance criteria, freedom-of-motion of mechanical snubbers shall be verified using at least one of the following: (1) manually induced snubber movement; or (2) evaluation of in-place snubber piston setting; or (3) stroking the mechanical snubber through its full range of travel.

e. Functional Tests

During the first refueling shutdown and at least once per 18 months thereafter during shutdown, a representative sample of snubbers of each type shall be tested using one of the following sample plans. The sample plan for each type shall be selected prior to the test period and cannot be changed during the test period. The NRC Regional Administrator shall be notified in writing of the sample plan selected for each snubber type prior to the test period or the sample plan used in the prior test period shall be implemented:

1) At least 10% of the total of each type of snubber shall be functionally tested either in-place or in a bench test. For each snubber of a type that does not meet the functional test acceptance criteria of Specification 4.7.9f., an additional 10% of that type of snubber shall be functionally tested until no more failures are found or until all snubbers of that type have been functionally tested; or

2) A representative sample of each type of snubber shall be functionally tested in accordance with Figure 4.7-1. "C" is the total number of snubbers of a type found not meeting the acceptance requirements of Specification 4.7.9f. The cumulative number of snubbers of a type tested is denoted by "N". At the end of each day's testing, the new values of "N" and "C" (previous day's total plus current day's increments) shall be plotted on Figure 4.7-1. If at any time the point plotted falls in the "Reject" region, all snubbers of that type shall be functionally tested. If at any time the point plotted falls in the "Accept" region, testing of snubbers of that type may be terminated. When the point plotted lies in the "Continue

Testing" region, additional snubbers of that type shall be tested until the point falls in the "Accept" region or the "Reject" region, or all the snubbers of that type have been tested; or

3) An initial representative sample of 55 snubbers shall be functionally tested. For each snubber type which does not meet the functional test acceptance criteria, another sample of at least one-half the size of the initial sample shall of at least one-half the size of the initial sample shall be tested until the total number tested is equal to the initial sample size multiplied by the factor, 1 + C/2, where "C" is the number of snubbers found which do not meet the functional test acceptance criteria. The results from this sample plan shall be plotted using an "Accept" line which follows the equation N = 55(1 + C/2). Each snubber point should be plotted as soon as the snubber is tested. If the point plotted falls on or below the "Accept" line, testing of that type of snubber may be terminated. If the point plotted falls above the "Accept" region or all the snubbers of that type have been tested.

Testing equipment failure during functional testing may invalidate that day's testing and allow that day's testing to resume anew at a later time provided all snubbers tested with the failed equipment during the day of equipment failure are retested. The representative sample selected for the functional test sample plans shall be randomly selected from the snubbers of each type and reviewed before beginning the testing. The review shall ensure, as far as practicable, that they are representative of the various configurations, operating environments, range of size, and capacity of snubbers of each type. Snubbers placed in the same location as snubbers which failed the previous functional test shall be retested at the time of the next functional test but shall not be included in the sample plan. If during the functional testing, additional sampling is required due to failure of only one type of snubber, the functional test results shall be reviewed at that time to determine if additional samples should be limited to the type of snubber which has failed the functional testing.

f. Functional Test Acceptance Criteria

The snubber functional test shall verify that:

1) Activation (restraining action) is achieved within the specified range in both tension and compression;
2) Snubber bleed, or release rate where required, is present in both tension and compression, within the specified range;

3) For mechanical snubbers, the force required to initiate or maintain motion of the snubber is within the specified range in both directions of travel; and
4) For snubbers specifically required not to displace under continuous load, the ability of the snubber to withstand load without displacement.

Testing methods may be used to measure parameters indirectly or parameters other than those specified if those results can be correlated to the specified parameters through established methods.

g. Functional Test Failure Analysis

An engineering evaluation shall be made of each failure to meet the functional test acceptance criteria to determine the cause of the failure. The results of this evaluation shall be used, if applicable, in selecting snubbers to be tested in an effort to determine the OPERABILITY of other snubbers irrespective of type which may be subject to the same failure mode.

For the snubbers found inoperable, an engineering evaluation shall be performed on the components to which the inoperable snubbers are attached. The purpose of this engineering evaluation shall be to determine if the components to which the inoperable snubbers are attached were adversely affected by the inoperability of the snubbers in order to ensure that the component remains capable of meeting the designed service.

If any snubber selected for functional testing either fails to lock up of fails to move, i.e., frozen-in-place, the cause will be evaluated and, if caused by manufacturer or design deficiency, all snubbers of the same type subject same defects shall be functionally tested. This testing requirement shall be independent of the requirements stated in Specification 4.7.9e. for snubbers not meeting the functional test acceptance criteria.

h. Functional Testing of Repaired and Replaced Snubbers

Snubbers which fail the visual inspection or the functional test acceptance criteria shall be repaired or replaced. Replacement snubbers and snubbers which have repairs which might effect the functional test results shall be tested to meet the functional test criteria before installation in the unit. Mechanical snubbers shall have met the acceptance criteria subsequent to their most recent service, and the freedom-of-motion test must have been performed within 12 months before being installed in the unit.

i. Snubber Service Life Program

The service life of hydraulic and mechanical snubbers shall be monitored to ensure that the service life is not exceeded between surveillance inspections. The maximum expected service life for various seals, springs, and other critical parts shall be determined and established based on engineering information and shall be extended or shortened based on monitored test results and failure history. Critical parts shall be replaced so that the maximum service life will not be exceeded during a period when the snubber is required to be OPERABLE. The parts replacements shall be documented and the documentation shall be retained in accordance with Specification 6.10.3.

DISTRIBUTION

No. of Copies

OFFSITE

U.S. Nuclear Regulatory Commission
Division of Technical Information and Document Control
7920 Norfolk Avenue
Bethesda, MD 20014

20 J. P. Vora
U.S. Nuclear Regulatory Commission
Electrical Engineering Branch
MS 1130
Washington, DC 20555

E. T. Baker
U. S. Nuclear Regulatory Commission
Office of Inspection and Enforcement
MS EWS 312 A
Washington, DC 20555

H. Shaw
U. S. Nuclear Regulatory Commission
Office of Nuclear Reactor Regulation
Washington, DC 20555

S. Moyers
Arizona Public Service Company
Phoenix, AZ 85036

K. Asmundson
RFD 7, P.O. Box 345
Gilford, NH 03246

K. Beard
416 Newport Drive
Greensburg, PA 15601

No. of Copies

D. D. Davis
5332 East Broadway
Long Beach, CA 90803

D. Collings
Duke Power Co.
P.O. Box 33189
Design Engineering, WC-24
Charlotte, NC 28242

D. P. Brown
EAS Inc.
P.O. Box 657
E. Greenwich, RI 02818

J. Corey
Electric Power Research Institute
P.O. Box 10412
Palo Alto, CA 94304

G. P. Knippel
General Dynamics
Electric Boat Div.
Dept. 478
Groton, CT 06340

M. D. Potter
General Electric Company
175 Curtner Avenue, MC 787
San Jose, CA 95125

E. Beffa
Pipe Hanger Division
ITT Grinnell Company, Inc.
260 W. Exchange St.
Providence, RI 02901

J. T. Boyd
ITT Grinnell Company, Inc.
260 W. Exchange St.
Providence, RI 02901

No. of
Copies

W. Wright
Pacific Scientific Company
1346 South State College Blvd.
Anaheim, CA 92803

G. Palmer
3110 Odd Fellows Road
Lynchburg, VA 24501

K. A. Stanley
Paul-Munroe Hydraulics, Inc.
1701 W. Sequoia Ave.
Orange, CA 92668

R. F. Brandt
Public Service Electric & Gas Co.
Nuclear Department
P.O. Box 236
Hancocks Bridge, NJ 08038

C. N. Krishnaswamy
Sargent and Lundy Engineers
55 E. Monroe St.
Chicago, IL 60603

D. Hafley
Sequoyah Nuclear Power Plant
P.O. Box 2000
Soddy-Daisy, TN 34701

M. P. Zyne
Southern Company Services
P.O. Box 2625
Birmingham, AL 35202

F. E. DiCola
Manager, Plant Services Dept.
Stone & Webster Engineering Corp.
3 Executive Campus
P.O. Box 5200
Cherry Hill, NJ 08034

No. of
Copies

G. A. Delp
Technicon Enterprises
R.D. #1 Reiff Rd.
Oley, PA 19547

P. Bisges
Union Electric Company
Callaway Plant
P.O. Box 620
Fulton, MO 65251

ONSITE

Hanford Engineering Development Laboratory

M. J. Anderson
L. K. Severud

50 Pacific Northwest Laboratory

D. E. Blahnik
S. H. Bush (20)
D. A. Dingee
R. E. Dodge (3)
S. K. Edler
M. D. Freshley
R. L. Goodman
P. G. Heasler (2)
A. B. Johnson, Jr. (10)
P. J. Pelto
J.T.A. Roberts
J. W. Vause
Publishing Coordination (2)
Technical Information (5)

NRC FORM 335 (2-84) NRCM 1102, 3201, 3202

U.S. NUCLEAR REGULATORY COMMISSION

BIBLIOGRAPHIC DATA SHEET

SEE INSTRUCTIONS ON THE REVERSE

1. REPORT NUMBER (Assigned by TIDC, add Vol. No., if any)

NUREG/CR-4279, Vol. 1
PNL-5479

2. TITLE AND SUBTITLE

Aging and Service Wear of Hydraulic and Mechanical Snubbers Used on Safety-Related Piping and Components of Nuclear Power Plants
Phase I Study

3. LEAVE BLANK

4. DATE REPORT COMPLETED

MONTH	YEAR
January	1986

5. AUTHOR(S)

SH Bush RE Dodge
PG Heasler

6. DATE REPORT ISSUED

MONTH	YEAR
February	1986

7. PERFORMING ORGANIZATION NAME AND MAILING ADDRESS (Include Zip Code)

Pacific Northwest Laboratory
P.O. Box 999
Richland, WA 99352

8. PROJECT/TASK/WORK UNIT NUMBER

9. FIN OR GRANT NUMBER

B2865

10. SPONSORING ORGANIZATION NAME AND MAILING ADDRESS (Include Zip Code)

Division of Engineering Technology
Office of Nuclear Regulatory Research
U.S. Nuclear Regulatory Commission
Washington, DC 20555

11a. TYPE OF REPORT

Topical Report

b. PERIOD COVERED (Inclusive dates)

12. SUPPLEMENTARY NOTES

13. ABSTRACT (200 words or less)

This report presents an overview of hydraulic and mechanical snubbers used on nuclear piping systems and components, based on information from the literature and other sources. The functions and functional requirements of snubbers are discussed. The real versus perceived need for snubbers is reviewed, based primarily on studies conducted by a Pressure Vessel Research Committee. Tests conducted to qualify snubbers, to accept them on a case-by-case basis, and to establish their fitness for continued operation are reviewed.

This report had two primary purposes. The first was to assess the effects of various aging mechanisms on snubber operation. The second was to determine the efficacy of existing tests in determining the effects of aging and degradation mechanisms. These tests include breakaway force, drag force, velocity/acceleration range for activation in tension or compression, release rates within specified tension/compression limits, and restricted thermal movement. The snubber operating experience was reviewed using licensee event reports and other historical data for a period of more than 10 years. Data were statistically analyzed using arbitrary snubber populations. Value-impact was considered in terms of exposure to a radioactive environment for examination/testing and the influence of lost snubber function and subsequent testing program expansion on the costs and operation of a nuclear power plant. The implications of the observed trends were assessed; recommendations include modifying or improving examination and testing procedures to enhance snubber reliability. Optimization of snubber populations by selective removal of unnecessary snubbers was also considered.

14. DOCUMENT ANALYSIS – a. KEYWORDS/DESCRIPTORS

Mechanical Snubbers
Hydraulic Snubbers
Safety-Related Piping
Nuclear Plant Aging Research Program
Aging
Degradation
Testing Requirements

b. IDENTIFIERS/OPEN-ENDED TERMS

15. AVAILABILITY STATEMENT

Unlimited

16. SECURITY CLASSIFICATION

(This page)
Unclassified
(This report)
Unclassified

17. NUMBER OF PAGES

18. PRICE

UNITED STATES
NUCLEAR REGULATORY COMMISSION
WASHINGTON, D.C. 20555

OFFICIAL BUSINESS
PENALTY FOR PRIVATE USE, $300

SPECIAL FOURTH-CLASS RATE
POSTAGE & FEES PAID
USNRC
WASH. D.C.
PERMIT No. G-67